THIS DRAWING IS THE EXCLUSIVE PROPERTY OF JMEG,LP, AND WAS PREPARED FOR THE EXCLUSIVE USE OF JMEG,LP ELECTRICAL CONTRACTORS, FOR THE SERVICES PERFORMED BY JMEG,LP. NO USE, REPRODUCTION, OR DUPLICATION OF THIS DRAWING, IN PART OR WHOLE MAY BE MADE WITHOUT WRITTEN PERMISSION OF JMEG,LP.

STREETWORKS™

Catalog #	TMU-25-M-8-XX-F	Type	
Project	Col-Met Spray Booth		
Comments	JS13, JS25	Date	
Prepared by			

DESCRIPTION

The Talon is the most versatile, functionally designed, universally adaptable outdoor luminaire available. The Talon brings outstanding performance to walkways, parking lots, roadways, building areas, and any security lighting application.

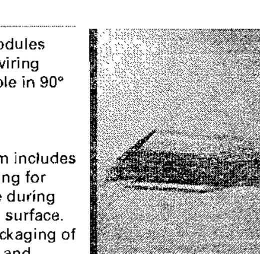

TMU
TALON MEDIUM

70 - 400W
Pulse Start Metal Halide
High Pressure Sodium
Metal Halide

ARCHITECTURAL AREA LUMINAIRE

SPECIFICATION FEATURES

Construction
HOUSING: One-piece heavy-wall, die-cast aluminum construction with integral reveal channels along top surface of housing. Internal cast-in wall separates optical and electrical chambers allowing components to operate cooler. DOOR: One-piece die-cast aluminum door frame with integral cast-in gasket channel seals optical chamber to an IP65 rating. LATCHES: Stainless steel latches and hinges allow for toolless opening and removal of door frame.

Electrical
Standard with ballast and related electrical componentry hard mounted to die-cast housing for optimal heat transfer and improved operating efficiency. POWERTRAY: Optional electrical componentry mounted to a swing-down galvanized steel power tray with integral handle. Electrical disconnects allow tray to be completely removed from the housing providing ample hand and tool room for attachment of fixture during installation. SOCKET: Standard with mogul-base socket for HPS and 175-400W MH. Standard with medium-base socket for 150W MH and below.

Optical
OPTICAL SYSTEMS: Choice of 14 high efficiency optical systems utilizing horizontal and vertical lamp orientations. Optional high efficiency segmented optical systems constructed of premium 95% reflective anodized aluminum sheet. Optical segments are rigidly mounted inside a thick gauge aluminum housing for superior protection. All segment faces are clean of rivet heads, tabs or other means of attachment which may cause streaking in the light distribution. All optical modules feature quick disconnect wiring plugs and are field rotatable in 90° increments.

Mounting
Extruded 8" aluminum arm includes internal bolt guides allowing for easy positioning of fixture during installation to pole or wall surface. Standard single carton packaging of housing, square pole arm and round pole adapter for contractor friendly arrival of produc. on site.

Finish
Housing and arm finished in a 5 stage premium TGIC polyester powder coat paint, 2.5 mil nominal thickness for superior protection against fade and wear. Standard colors include black, bronze, grey, white, dark platinum, and graphite metallic.

DARK SKY COMPLIANT FCO
NOTE: In all flat glass configurations only

DIMENSIONS

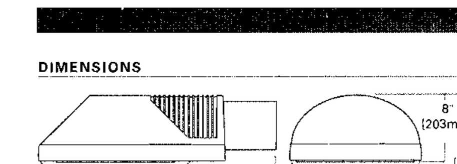

ARM DRILLING

TYPE "M"

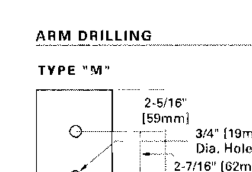

WALL DRILLING

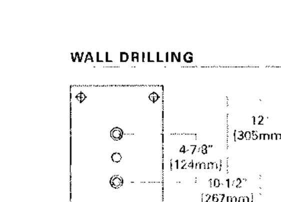

CERTIFICATION DATA
IP65 Rated
UL 1598
CSA Listed
25°C Ambient Temperature

EPA
Effective Projected Area:
Recessed Door w/o Arm 0.79
Deep Door w/o Arm 1.02
8" Arm 0.43

SHIPPING DATA
Approximate Net Weight:
Recessed Door 47 lbs. (21.79 kgs.)
Deep Door 52 lbs. (23.63 kgs.)

COOPER Lighting
www.cooperlighting.com

ADH082662 pc
2010-06-01 16:38:50

PHOTOMETRICS

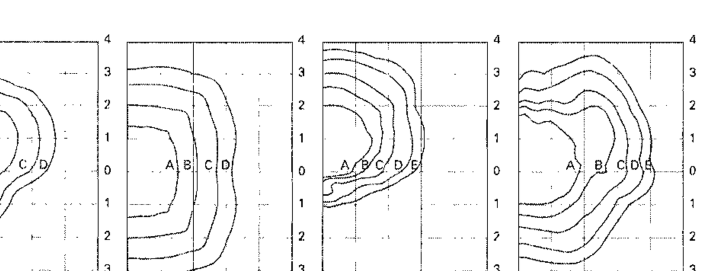

TMU17MXX3VF
175-Watt MH
14,000-Lumen Clear Lamp
Type III Vertical
Flat Glass

TMU17MXXASF
175-Watt MH
14,000-Lumen Clear Lamp
Area Square
Flat Glass

TMU25MXXSLF
250-Watt MH
20,500-Lumen Clear Lamp
Spill Light Eliminator
Flat Glass

TMU40MXX3SF
400-Watt MH
36,000-Lumen Clear Lamp
Type III Segmented
Flat Glass

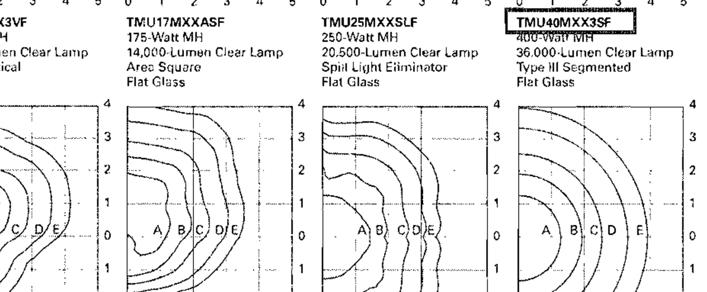

TMU40MXX3VS
400-Watt MH
36,000-Lumen Clear Lamp
Type III Vertical
Sag Glass

TMU40MXX4VS
400-Watt MH
36,000-Lumen Clear Lamp
Type IV Automotive Perimeter
Sag Glass

TMU40MXX5SF
400-Watt MH
36,000-Lumen Clear Lamp
Type V Segmented
Flat Glass

TMU40MXXARS
400-Watt MH
36,000-Lumen Clear Lamp
Area Round
Sag Glass

Footcandle Table
Select mounting height and read across for footcandle values of each isofootcandle line. Distance in units of mounting height

Mounting Height	Footcandle Values for Isofootcandle Lines A	B	C	D	E
175W [3V/AS]					
15'	1.70	0.85	0.34	0.17	--
20'	1.00	0.50	0.20	0.10	--
25'	0.64	0.32	0.13	0.06	--
250W [SL]/400W [3S]					
20'	2.00	1.00	0.50	0.20	0.10
25'	1.28	0.64	0.32	0.13	0.06
30'	0.88	0.44	0.22	0.09	0.04

Footcandle Table
Select mounting height and read across for footcandle values of each isofootcandle line. Distance in units of mounting height.

Mounting Height	Footcandle Values for Isofootcandle Lines A	B	C	D	E
400W [3V/4V/5S/AR]					
20'	3.00	1.50	0.75	0.30	0.15
25'	2.00	1.00	0.50	0.20	0.10
30'	1.38	0.69	0.34	0.13	0.06

MOUNTING CONFIGURATIONS

Wall Mount	Arm Mount Single E.P.A.	Arm Mount 2 @ 180° E.P.A.	Arm Mount 2 @ 90° E.P.A.	Arm Mount 3 @ 120° E.P.A.	Arm Mount 3 @ 90° E.P.A.	Arm Mount 4 @ 90° E.P.A.
	Recessed Door 1.22	Recessed Door 2.44	Recessed Door 2.44	Recessed Door 3.23	Recessed Door 3.23	Recessed Door 3.63
	Deep Door 1.45	Deep Door 2.90	Deep Door 2.90	Deep Door 3.92	Deep Door 3.92	Deep Door 4.43

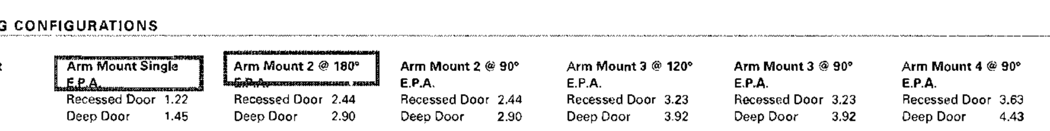

COOPER Lighting
www.cooperlighting.com

NOTE: Specifications and dimensions subject to change without notice.
Visit our web site at www.cooperlighting.com
Customer First Center 1121 Highway 74 South Peachtree City, GA 30269 770.486.4800 FAX 770.486.4801

ADH082662 pc
2010-06-01 16:38:50
2010-08-05 08:08:48

ORDERING INFORMATION

Sample Number: TMU40SWW3SF

Product Family [1]
TMU=Talon Site Medium

Lamp Wattage [2]
Pulse Start Metal Halide
70: 70W
10: 100W
15: 150W
25: 250W
32: 320W[3]
35: 350W[3]
40: 400W[3]
High Pressure Sodium
70: 70W
10: 100W
15: 150W
20: 200W
25: 250W
40=400W
M (Probe Start) [4]
17=175W
25=250W
40=400W[3]

Lamp Type
P=Pulse Start Metal Halide
S=High Pressure Sodium
M=Metal Halide

Ballast Type
C=CWI
H=Reac. /HPF
K=10KV CWA
N=Hi.Reac./NPF
P=Hi. Reac./HPF
R=Reac./NPF
W=CWA

Voltage
2=120V
0=208V
4=240V
7: 277V
8: 480V
9: 347V
W: Multi-Tap wired 120V
V: Multi-Tap wired 240V
N: Multi-Tap wired 277V

Distribution
Horizontal Lamp
2F: Type II Formed
2S: Type II Segmented
3F: Type III Formed
3S: Type III Segmented
4F=Type IV Formed
4S=Type IV Segmented
5F=Type V Formed
5S=Type V Segmented
SL=Spill Light Eliminator
AF=Automotive Front Row
Vertical Lamp
3V=Type III Vertical[5]
4V=Type IV Vertical[5]
AR=Area Round[5]
AS=Area Square[5]

Lens Type
F=Flat Glass
S=Sag Glass

Colors [8]
BZ=Bronze
AP=Grey
BK=Black
WH: White
DP: Dark Platinum
GM: Graphite Metallic

Options [7]
1=Single Fuse (120, 277 or 347V)[8]
2=Double Fuse, (208, 240, or 480V)[8]
3: Three Place Terminal Block
4: NEMA Twistlock Photocontrol Receptacle
B: Internal House side Shield[9]
DD: Deep Door
DM: Direct Mount for Round or Square Pole
DW: Direct Wall Mount Kit
E: Quartz Restrike w/Delay (Also Strikes at Cold Start)[10]
H: Plug in Starter Receptacle
HL: Hi/Low Dimming[11]
MS: External Mast Arm Adapter
P: Button Type Photocontrol (120, 208,240, or 277V)[8]
R: Removable Power Tray
L=Lamp Included
U=U.L. Listed
V=Polycarbonate Vandal Shield
Q=Quartz Restrike (Hot Restrike Only)[10]
WM=Wall Bracket with 8" Arm

Accessories [12]
MA1010-XX=Single Tenon Adapter for 3 1/2" O.D. Tenon
MA1011-XX=2 @ 180 Degrees Tenon Adapter for 3 1/2" O.D. Tenon
MA1012-XX=3 @ 120 Degrees Tenon Adapter for 3 1/2" O.D. Tenon
MA1013-XX: 4 @ 90 Degrees Tenon Adapter for 3 1/2" O.D. Tenon
MA1014-XX: 2 @ 90 Degrees Tenon Adapter for 3 1/2" O.D. Tenon
MA1015-XX: 2 @ 120 Degrees Tenon Adapter for 3 1/2" O.D.
MA1016-XX: 3 @ 90 Degrees Tenon Adapter for 3 1/2" O.D. Tenon
MA1017-XX: Single Tenon Adapter for 2 3/8" O.D. Tenon
MA1018-XX: 2 @ 180 Degrees Tenon Adapter for 2 3/8" O.D. Tenon
MA1019-XX: 3 @ 120 Degrees Tenon Adapter for 2 3/8" O.D. Tenon
MA1045-XX: 4 @ 90 Degrees Tenon Adapter for 2 3/8" O.D. Tenon
MA1048-XX: 2 @ 90 Degrees Tenon Adapter for 2 3/8" O.D. Tenon
MA1049-XX: 3 @ 90 Degrees Tenon Adapter for 2 3/8" O.D. Tenon
MA1213-XX=External House-side Shield Kit [EPA - 0.38][9]
OA/RA1016=NEMA Photocontrol (105 - 285V)
OA/RA1027=NEMA Photocontrol - 480V
OARA1201=NEMA Photocontrol (347V)
OA/RA1013=Shorting Cap

Notes: 1 8" arm and round pole adapter included with fixture. 2 Standard with mogul-base socket for HPS and 100-400 MH. Standard with medium-base socket for 70W MH. 3 Requires reduced envelope lamp. 4 Probe Start Metal Halide available for non-US markets only (175-400W). 5 Vertical lamp optics ship standard with deep door. Flat glass not available for 250W - 400W. 6 Add as suffix/must specify. 7 Add as a suffix/must be ordered in alphanumeric order. 8 Must specify voltage. 9 House side shield not available on 5S, 5F, AS, AR and SL optics. 10 Quartz options not available on SL and AF optics. 11 Requires vertical lamp orientation. Provides 24V low voltage leads used in dimming controls. 12 Order Separately/replace XX with color destination.

COOPER Lighting
www.cooperlighting.com

NOTE: Specifications and dimensions subject to change without notice.
Visit our web site at www.cooperlighting.com
Customer First Center 1121 Highway 74 South Peachtree City, GA 30269 770.486.4800 FAX 770.486.4801

ADH082662 pc
2010-06-01 16:38:50
2010-08-05 08:08:48

LITHONIA LIGHTING

Catalog Number	TWR2-400M-277-SCWA-PE-LPI
Notes	
Type	WP

FEATURES & SPECIFICATIONS

INTENDED USE
Ideal for mounting above entryways and loading docks.

CONSTRUCTION
Rugged, corrosion-resistant die-cast aluminum back housing and hinged door frame. Castings are sealed with a one-piece gasket to inhibit the entrance of external contaminants. Finish is bronze polyester powder paint for lasting durability.

ELECTRICAL
Ballast is constant wattage autotransformer. Ballast is 100% factory-tested.
Metal halide: super CWA pulse start ballasts, 88% efficient and EISA compliant, are required for 250-400W (must order SCWA option) Pulse Start for US shipments only. CSA required for pulse start shipments to Canada. 250M and 400M do not comply with California Title 20 regulations.
Socket: Mogul-base socket, nickel-plated screw shell and center contact.

OPTICS
Refractor is prismatic borosilicate glass. Reflector is die-formed anodized stippled aluminum.
Mogul-base lamp included in carton.

INSTALLATION
Housing is configured for mounting directly over a standard 4" outlet box or for surface wiring via any of three convenient 1/2" threaded conduit entry hubs.

LISTING
UL Listed to US and Canadian safety standards (see Options). Suitable for wet locations (25°C maximum ambient temperature).
Note: Specifications subject to change without notice.

Wall Packs

TWR2

METAL HALIDE: 250-400W
HIGH PRESSURE SODIUM: 250-400W

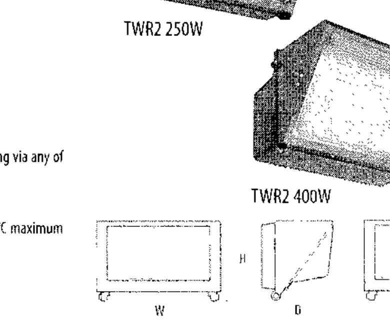

TWR2 250W
TWR2 400W

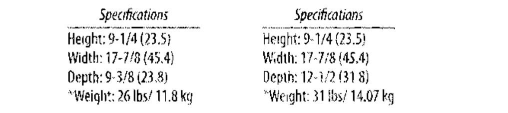

TWR2 250W Specifications	TWR2 400W Specifications
Height: 9-1/4 (23.5)	Height: 9-1/4 (23.5)
Width: 17-7/8 (45.4)	Width: 17-7/8 (45.4)
Depth: 9-3/8 (23.8)	Depth: 12-1/2 (31.8)
*Weight: 26 lbs/ 11.8 kg	*Weight: 31 lbs/ 14.07 kg

All dimensions shown in inches (centimeters) unless otherwise noted.
*Weight as configured in example below.

ORDERING INFORMATION

Example: TWR2 400M TB SCWA LPI

Catalog Number	Wattage	Voltage	Photocell included	Lamp included	Available in Canada
Metal halide					
TWR2 250M 120 PE LPI CSA	250	120	Y	Y	Y
TWR2 250M 120 SCWA PE LPI	250	120	Y	Y	Y
TWR2 250M 277 SCWA PE LPI	250	277	Y	Y	Y
TWR2 250M 120/347 LPI CSA	250	120/347	N	Y	Y
TWR2 250M TB SCWA LPI	250	120/208/240/277	N	Y	N
TWR2 320M 120 SCWA PE LPI	320	120	Y	Y	Y
TWR2 320M 277 SCWA PE LPI	320	277	Y	Y	Y
TWR2 320M TB SCWA LPI	320	120/208/240/277	N	Y	N
TWR2 400M 120 SCWA PE LPI	400	120	Y	Y	Y
TWR2 400M 277 SCWA PE LPI	400	277	Y	Y	Y
TWR2 400M 120/347 LPI CSA	400	120/347	N	Y	Y
TWR2 400M TB SCWA LPI	400	120/208/240/277	N	Y	N
High pressure sodium					
TWR2 250S 120/347 LPI CSA	250	120/347	N	Y	Y
TWR2 250S TB LPI	250	120/208/240/277	N	Y	N
TWR2 400S 120/347 LPI CSA	400	120/347	N	Y	Y
TWR2 400S TB LPI	400	120/208/240/277	N	Y	N

Accessories: Order as separate catalog number. Shipped separately.	
TWR2WG U	Wireguard

TWR2 High Pressure Sodium/Metal Halide Wall Pack

TWR2 250S Test No. LTL10411

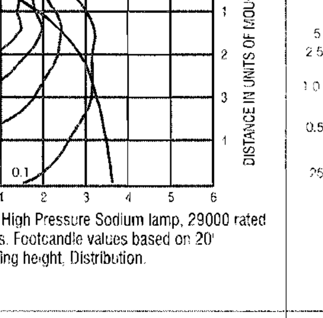

250W High Pressure Sodium lamp, 29000 rated lumens. Footcandle values based on 20' mounting height, Distribution.

TWR2 400S Test No. LTL10376

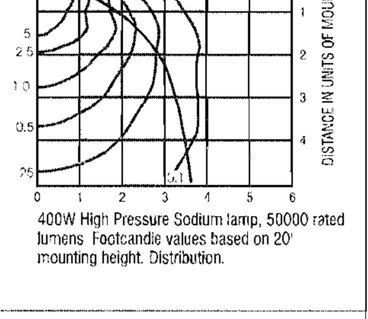

400W High Pressure Sodium lamp, 50000 rated lumens. Footcandle values based on 20' mounting height. Distribution.

TWR2 250M Test No. LTL10414

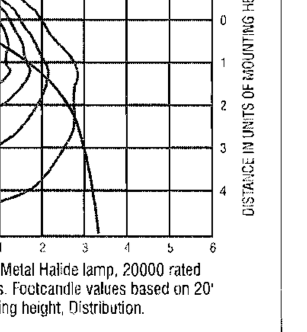

250W Metal Halide lamp, 20000 rated lumens. Footcandle values based on 20' mounting height, Distribution.

LITHONIA LIGHTING
An Acuity Brands Company

OUTDOOR: One Lithonia Way Conyers, GA 30012 Phone: 800-279-8041 Fax: 770-918-1209 www.lithonia.com © 2008-2012 Acuity Brands Lighting, Inc. All rights reserved. Rev. 10/18/2012

JMEG ELECTRICAL CONTRACTORS
TEXAS FIRM REGISTRATION NUMBER: F-5977

COL-MET SPRAY BOOTH
ROCKWALL, TX

KEYPLAN

SEAL

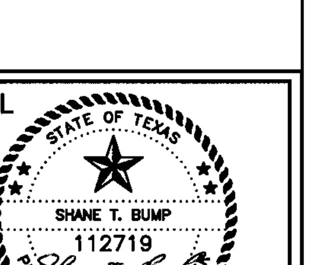

"THE SEAL APPEARING ON THIS DOCUMENT WAS AUTHORIZED BY SHANE T. BUMP P.E. 112719"

DATE:	NO:	REVISIONS:

DATE:	NO:	REVISIONS:

DRAWN BY:	CDY
CHECKED BY:	SB
APPROVED BY:	SB
DATE:	06-12-2014
SCALE:	AS SHOWN
SUPERSEDES:	
SUPERSEDED BY:	

JOB NO: 3494

FIXTURE CUTSHEETS

SHEET
E2.0B