BILLS OF REINFORCING STEEL (For Box Length = 40 feet)

NUMBER OF SPANS	SECTION DIMENSIONS S	H	T	U	Bars B No.	Size	Spa	Length	Wt	Bars C & D No.	Size	Spa	Bar C Length	Bar C Wt	Bar D Length	Bar D Wt	Bars E No.	Size	Spa	Length	Wt
2	8'-0"	4'-0"	9"	8"	194	#5	5"	17'- 9"	3,592	194	#4	5"	7'-11"	1,026	5'- 8"	734	194	#6	5"	8'-10"	2,574
3	8'-0"	4'-0"	9"	8"	194	#5	5"	26'- 5"	5,345	194	#4	5"	7'-11"	1,026	5'- 8"	734	194	#6	5"	17'- 6"	5,099
4	8'-0"	4'-0"	9"	8"	194	#5	5"	35'- 1"	7,099	194	#4	5"	7'-11"	1,026	5'- 8"	734	194	#6	5"	26'- 2"	7,625
5	8'-0"	4'-0"	9"	8"	194	#5	5"	43'- 9"	8,852	194	#4	5"	7'-11"	1,026	5'- 8"	734	194	#6	5"	34'-10"	10,150
6	8'-0"	4'-0"	9"	8"	194	#5	5"	52'- 5"	10,606	194	#4	5"	7'-11"	1,026	5'- 8"	734	194	#6	5"	43'- 6"	12,675
2	8'-0"	5'-0"	9"	8"	194	#5	5"	17'- 9"	3,592	194	#4	5"	8'-11"	1,156	5'- 8"	734	194	#6	5"	8'-10"	2,574
3	8'-0"	5'-0"	9"	8"	194	#5	5"	26'- 5"	5,345	194	#4	5"	8'-11"	1,156	5'- 8"	734	194	#6	5"	17'- 6"	5,099
4	8'-0"	5'-0"	9"	8"	194	#5	5"	35'- 1"	7,099	194	#4	5"	8'-11"	1,156	5'- 8"	734	194	#6	5"	26'- 2"	7,625
5	8'-0"	5'-0"	9"	8"	194	#5	5"	43'- 9"	8,852	194	#4	5"	8'-11"	1,156	5'- 8"	734	194	#6	5"	34'-10"	10,150
6	8'-0"	5'-0"	9"	8"	194	#5	5"	52'- 5"	10,606	194	#4	5"	8'-11"	1,156	5'- 8"	734	194	#6	5"	43'- 6"	12,675
2	8'-0"	6'-0"	9"	8"	194	#5	5"	17'- 9"	3,592	194	#4	5"	9'-11"	1,285	5'- 8"	734	194	#6	5"	8'-10"	2,574
3	8'-0"	6'-0"	9"	8"	194	#5	5"	26'- 5"	5,345	194	#4	5"	9'-11"	1,285	5'- 8"	734	194	#6	5"	17'- 6"	5,099
4	8'-0"	6'-0"	9"	8"	194	#5	5"	35'- 1"	7,099	194	#4	5"	9'-11"	1,285	5'- 8"	734	194	#6	5"	26'- 2"	7,625
5	8'-0"	6'-0"	9"	8"	194	#5	5"	43'- 9"	8,852	194	#4	5"	9'-11"	1,285	5'- 8"	734	194	#6	5"	34'-10"	10,150
6	8'-0"	6'-0"	9"	8"	194	#5	5"	52'- 5"	10,606	194	#4	5"	9'-11"	1,285	5'- 8"	734	194	#6	5"	43'- 6"	12,675
2	8'-0"	7'-0"	9"	8"	194	#5	5"	17'- 9"	3,592	194	#4	5"	10'-11"	1,415	5'- 8"	734	194	#6	5"	8'-10"	2,574
3	8'-0"	7'-0"	9"	8"	194	#5	5"	26'- 5"	5,345	194	#4	5"	10'-11"	1,415	5'- 8"	734	194	#6	5"	17'- 6"	5,099
4	8'-0"	7'-0"	9"	8"	194	#5	5"	35'- 1"	7,099	194	#4	5"	10'-11"	1,415	5'- 8"	734	194	#6	5"	26'- 2"	7,625
5	8'-0"	7'-0"	9"	8"	194	#5	5"	43'- 9"	8,852	194	#4	5"	10'-11"	1,415	5'- 8"	734	194	#6	5"	34'-10"	10,150
6	8'-0"	7'-0"	9"	8"	194	#5	5"	52'- 5"	10,606	194	#4	5"	10'-11"	1,415	5'- 8"	734	194	#6	5"	43'- 6"	12,675
2	8'-0"	8'-0"	9"	8"	194	#5	5"	17'- 9"	3,592	162	#5	6"	11'-11"	2,014	6'- 1"	1,028	194	#6	5"	8'-10"	2,574
3	8'-0"	8'-0"	9"	8"	194	#5	5"	26'- 5"	5,345	162	#5	6"	11'-11"	2,014	6'- 1"	1,028	194	#6	5"	17'- 6"	5,099
4	8'-0"	8'-0"	9"	8"	194	#5	5"	35'- 1"	7,099	162	#5	6"	11'-11"	2,014	6'- 1"	1,028	194	#6	5"	26'- 2"	7,625
5	8'-0"	8'-0"	9"	8"	194	#5	5"	43'- 9"	8,852	162	#5	6"	11'-11"	2,014	6'- 1"	1,028	194	#6	5"	34'-10"	10,150
6	8'-0"	8'-0"	9"	8"	194	#5	5"	52'- 5"	10,606	162	#5	6"	11'-11"	2,014	6'- 1"	1,028	194	#6	5"	43'- 6"	12,675

NUMBER OF SPANS	Bars F_1~#4 No.	Spa	Length	Wt	Bars F_2~#4 at 1'-6" Max No.	Length	Wt	Bars M~#4 at 1'-6" Max No.	Length	Wt	Bars Y & Z~#4 at 1'-6" Max No.	Bar Y Length	Bar Y Wt	Bar Z Length	Bar Z Wt	Bars H 4~#4 Length	Weight	Bars K No.	Weight
2	12	18"	39'-9"	319	56	39'-9"	1,487	56	4'- 0"	150	28	4'-10"	90	9'- 4"	175	17'- 9"	47	38	108
3	18	18"	39'-9"	478	80	39'-9"	2,124	56	4'- 0"	150	56	4'-10"	181	9'- 4"	349	26'- 5"	71	56	159
4	24	18"	39'-9"	637	104	39'-9"	2,762	56	4'- 0"	150	84	4'-10"	271	9'- 4"	524	35'- 1"	94	72	204
5	30	18"	39'-9"	797	128	39'-9"	3,399	56	4'- 0"	150	112	4'-10"	362	9'- 4"	698	43'- 9"	117	90	256
6	36	18"	39'-9"	956	152	39'-9"	4,036	56	4'- 0"	150	140	4'-10"	452	9'- 4"	873	52'- 5"	140	108	307
2	12	18"	39'-9"	319	62	39'-9"	1,646	56	5'- 0"	187	28	4'-10"	90	11'- 4"	212	17'- 9"	47	38	108
3	18	18"	39'-9"	478	88	39'-9"	2,337	56	5'- 0"	187	56	4'-10"	181	11'- 4"	424	26'- 5"	71	56	159
4	24	18"	39'-9"	637	114	39'-9"	3,027	56	5'- 0"	187	84	4'-10"	271	11'- 4"	636	35'- 1"	94	72	204
5	30	18"	39'-9"	797	140	39'-9"	3,717	56	5'- 0"	187	112	4'-10"	362	11'- 4"	848	43'- 9"	117	90	256
6	36	18"	39'-9"	956	166	39'-9"	4,408	56	5'- 0"	187	140	4'-10"	452	11'- 4"	1,060	52'- 5"	140	108	307
2	12	18"	39'-9"	319	68	39'-9"	1,806	56	6'- 0"	224	28	4'-10"	90	13'- 4"	249	17'- 9"	47	38	108
3	18	18"	39'-9"	478	96	39'-9"	2,549	56	6'- 0"	224	56	4'-10"	181	13'- 4"	499	26'- 5"	71	56	159
4	24	18"	39'-9"	637	124	39'-9"	3,293	56	6'- 0"	224	84	4'-10"	271	13'- 4"	748	35'- 1"	94	72	204
5	30	18"	39'-9"	797	152	39'-9"	4,036	56	6'- 0"	224	112	4'-10"	362	13'- 4"	998	43'- 9"	117	90	256
6	36	18"	39'-9"	956	180	39'-9"	4,780	56	6'- 0"	224	140	4'-10"	452	13'- 4"	1,247	52'- 5"	140	108	307
2	12	18"	39'-9"	319	68	39'-9"	1,806	56	7'- 0"	262	28	4'-10"	90	15'- 4"	287	17'- 9"	47	38	108
3	18	18"	39'-9"	478	96	39'-9"	2,549	56	7'- 0"	262	56	4'-10"	181	15'- 4"	574	26'- 5"	71	56	159
4	24	18"	39'-9"	637	124	39'-9"	3,293	56	7'- 0"	262	84	4'-10"	271	15'- 4"	860	35'- 1"	94	72	204
5	30	18"	39'-9"	797	152	39'-9"	4,036	56	7'- 0"	262	112	4'-10"	362	15'- 4"	1,147	43'- 9"	117	90	256
6	36	18"	39'-9"	956	180	39'-9"	4,780	56	7'- 0"	262	140	4'-10"	452	15'- 4"	1,434	52'- 5"	140	108	307
2	12	18"	39'-9"	319	74	39'-9"	1,965	56	8'- 0"	299	28	4'-10"	90	17'- 4"	324	17'- 9"	47	38	108
3	18	18"	39'-9"	478	104	39'-9"	2,762	56	8'- 0"	299	56	4'-10"	181	17'- 4"	648	26'- 5"	71	56	159
4	24	18"	39'-9"	637	134	39'-9"	3,558	56	8'- 0"	299	84	4'-10"	271	17'- 4"	973	35'- 1"	94	72	204
5	30	18"	39'-9"	797	164	39'-9"	4,355	56	8'- 0"	299	112	4'-10"	362	17'- 4"	1,297	43'- 9"	117	90	256
6	36	18"	39'-9"	956	194	39'-9"	5,151	56	8'- 0"	299	140	4'-10"	452	17'- 4"	1,621	52'- 5"	140	108	307

QUANTITIES

NUMBER OF SPANS	Per foot of Barrel Conc (CY)	Reinf (Lb)	Curb Conc (CY)	Reinf (Lb)	Total Conc (CY)	Reinf (Lb)
2	1.296	253.7	1.3	155	53.1	10,302
3	1.877	387.2	2.0	230	77.1	15,716
4	2.457	520.7	2.6	298	100.9	21,126
5	3.037	654.2	3.3	373	124.8	26,541
6	3.617	787.7	3.9	447	148.6	31,955
2	1.370	262.8	1.3	155	56.1	10,665
3	1.975	398.5	2.0	230	81.0	16,171
4	2.580	534.3	2.6	298	105.8	21,670
5	3.185	670.1	3.3	373	130.7	27,176
6	3.790	805.9	3.9	447	155.5	32,681
2	1.444	271.8	1.3	155	59.1	11,028
3	2.074	409.9	2.0	230	85.0	16,624
4	2.704	547.9	2.6	298	110.8	22,214
5	3.333	686.0	3.3	373	136.6	27,811
6	3.963	824.0	3.9	447	162.4	33,406
2	1.519	277.0	1.3	155	62.1	11,234
3	2.173	415.9	2.0	230	88.9	16,867
4	2.827	554.9	2.6	298	115.7	22,494
5	3.481	693.9	3.3	373	142.5	28,128
6	4.136	832.9	3.9	447	169.3	33,761
2	1.593	305.1	1.3	155	65.0	12,360
3	2.272	446.4	2.0	230	92.9	18,084
4	2.951	587.6	2.6	298	120.6	23,802
5	3.630	728.9	3.3	373	148.5	29,527
6	4.309	870.1	3.9	447	176.3	35,249

H	Bar Dimensions "X"	"Y"
4'-0"	4'-7"	2'-4"
5'-0"	5'-7"	2'-4"
6'-0"	6'-7"	2'-4"
7'-0"	7'-7"	2'-4"
8'-0"	8'-7"	2'-9"

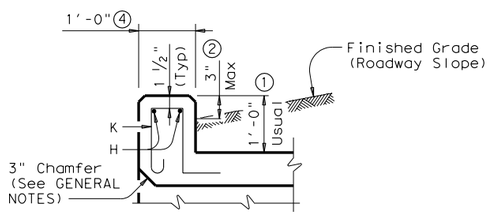

SECTION THRU CURB

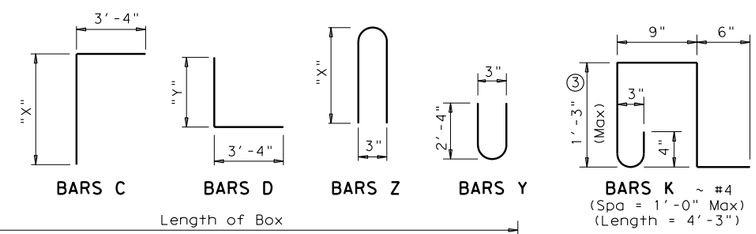

BARS C BARS D BARS Z BARS Y BARS K ~ #4 (Spa = 1'-0" Max) (Length = 4'-3")

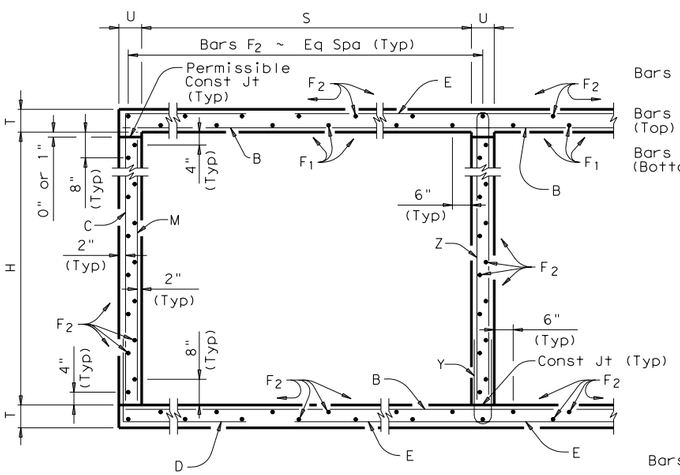

TYPICAL SECTION

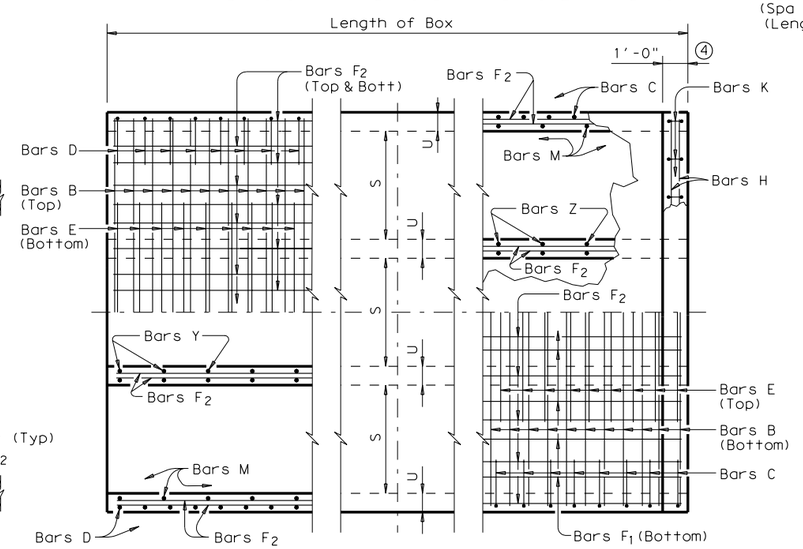

BOTTOM SLAB PART PLANS TOP SLAB

GENERAL NOTES:

Designed according to current AASHTO Standard and Interim Specifications.
Designed to the maximum fill height shown.
All reinforcing steel shall be Grade 60.
All concrete shall be Class "C" with a minimum compressive strength of 3,600 psi.
The use of permanent forms is not allowed.
The bottom edge of the top slab shall be chamfered 3" at the entrance.
Reinforcing bars shall be adjusted to provide a minimum of 1 1/4" clear cover.
Construction joints shown at the flow line may be raised a maximum of 6" at the Contractor's option. If this option is used, Bars M may be cut off or raised, Bars C and D may be reversed, and Bars Y and Z may be reversed.
See standard MC-MD for skewed ends, angle sections and lengthening details.

① 0" min to 5'-0" max. Estimated curb heights are shown elsewhere in the plans. For structures without railing and curbs taller than 1'-0", refer to ECD standard. For structures with T6 bridge rail, refer to T6-CM standard. For structures with bridge rail, other than T6, refer to RAC standard.

② For vehicle safety, the following requirements must be met:
- For structures without bridge rail, curbs shall project no more than 3" above finished grade.
- For structures with bridge rail, curbs shall be flush with finished grade.

Curb heights shall be reduced, if necessary, to meet the above requirements. No changes will be made in quantities and no additional compensation will be allowed for this work.

③ For curbs less than 1'-0" high, tilt bars K or reduce bar height as necessary to maintain cover. For curbs less than 3" high, bars K may be omitted.

④ 1'-0" typical. 2'-0" when RAC standard is referred to elsewhere in the plans.

HS20 LOADING

Texas Department of Transportation
Bridge Division

MULTIPLE BOX CULVERTS CAST-IN-PLACE
8'-0" SPAN
2' TO 16' FILL

MC-8-16

FILE: mc816ste.dgn	DN: GAF	CK: LMW	DW: BWH/TxDOT	CK: GAF
©TxDOT May 2005	DISTRICT	FEDERAL AID PROJECT		SHEET
REVISIONS	COUNTY	CONTROL	SECT	JOB	HIGHWAY

DISCLAIMER:
The use of this standard is governed by the "Texas Engineering Practice Act". No warranty of any kind is made by TxDOT for any purpose whatsoever. TxDOT assumes no responsibility for the conversion of this standard to other formats or for incorrect results or damages resulting from its use.

ACC:
LEVELS DISPLAYED
1