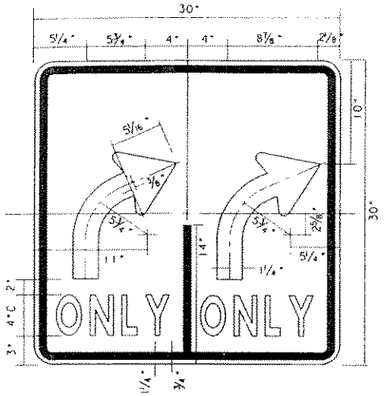

R3-8RR
30"x 30"

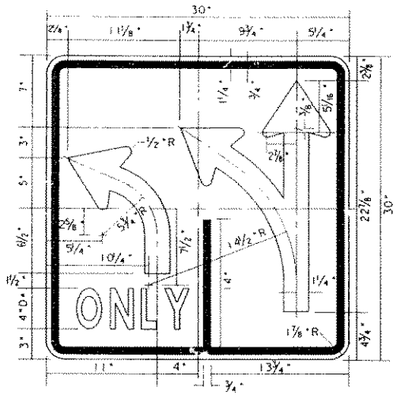

* SPACING REDUCED 50%

R3-8L
30"x 30"

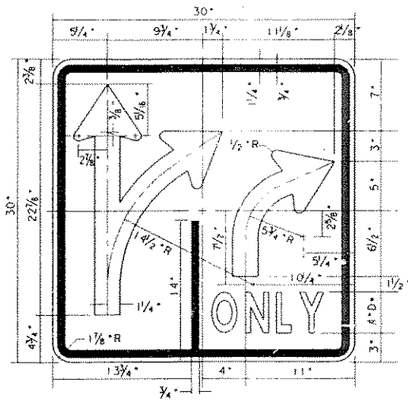

R3-8R
30"x 30"

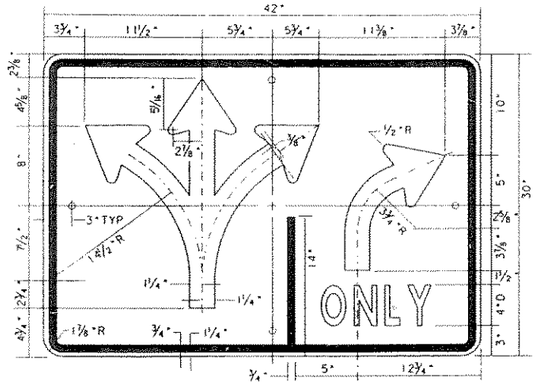

R3-8R (SPL)
42"x 30"

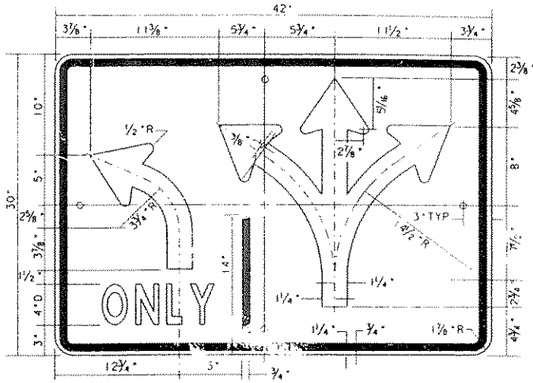

R3-8L (SPL)
42"x 30"

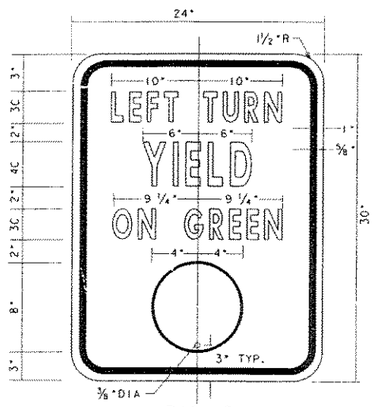

R10-12
24"x 30"

LEGEND BLACK (NON-REFLECTIVE)
BACKGROUND WHITE (REFLECTIVE)
CIRCULAR GREEN (REFLECTIVE)

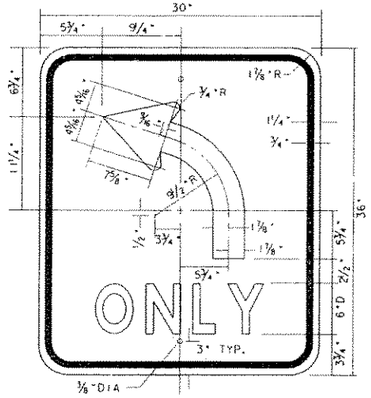

R3-5L
R3-5R (RT. ARROW)
30"x 36"

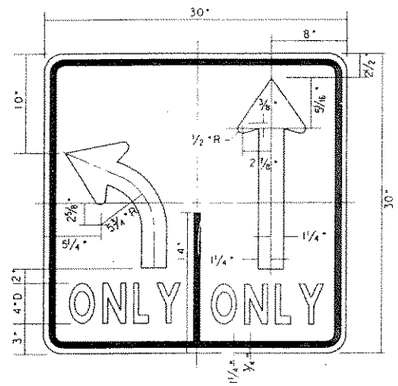

R3-8LS
30"x 30"

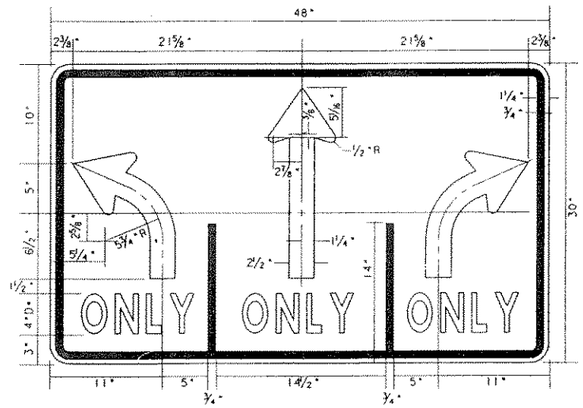

R3-8RSL
48"x 30"

*SPACING REDUCED 50%

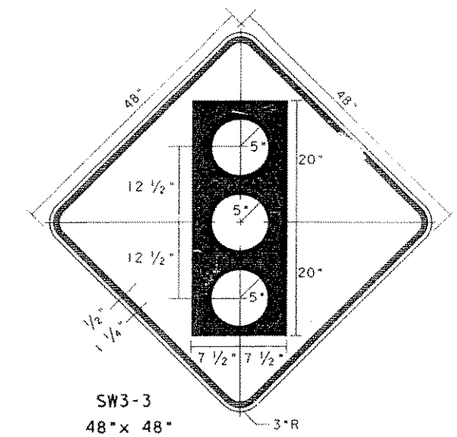

SW3-3
48"x 48"

COLORS

SYMBOL & LEGEND- BLACK (NON-REFL.)
TOP CIRCLE - RED (REFL.)
BOTTOM CIRCLE - GREEN (REFL.)
BACKGROUND - YELLOW (REFL.)
TYPE C REFLECTIVE SHEETING

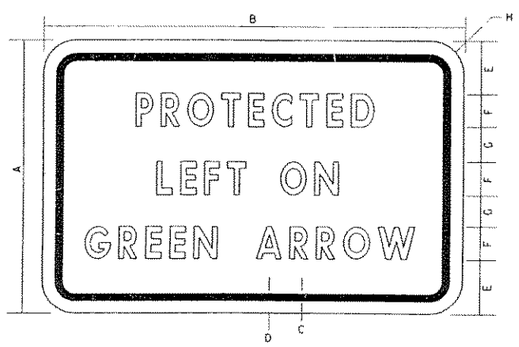

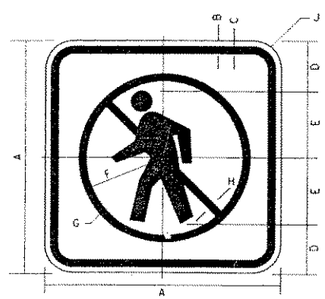

CIRCLE AND DIAGONAL - RED
SYMBOL & BORDER - BLACK
BACKGROUND - WHITE

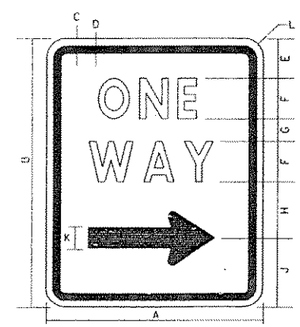

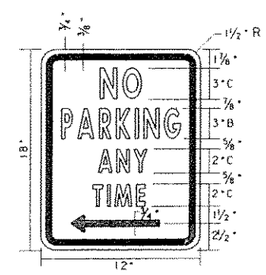

R7-1L
R7-1R (RT ARROW)
R7-1LR (DBL ARROW)
12"x 18"

GENERAL NOTES:

ALPHABETS AND LATERAL SPACING BETWEEN LETTERS AND NUMERALS SHALL CONFORM WITH THE FEDERAL HIGHWAY ADMINISTRATION'S "MANUAL ON UNIFORM TRAFFIC CONTROL DEVICES FOR STREETS AND HIGHWAYS". LATEST EDITION AND ANY APPROVED CHANGES THERETO. LATERAL SPACING OF TEXT SHALL BE SUCH AS TO PROVIDE A BALANCED APPEARANCE.

SIGN BACKGROUNDS SHALL BE OF FLAT SURFACE REFLECTIVE SHEETING CONFORMING WITH THE SPECIFICATIONS (TYPE A) UNLESS OTHERWISE SPECIFIED IN THE PLANS.

SIGN LEGENDS SHALL BE APPLIED BY THE SCREENING PROCESS.

THE SIGN BLANKS SHALL BE ONE PIECE 5/8 INCH THICK PLYWOOD (TYPE A) CONFORMING TO THE SPECIFICATIONS UNLESS ATTACHED TO SIGNAL POLES.

THE SIGN BLANKS SHALL BE ONE PIECE SHEET ALUMINUM ALLOY 0.080 INCH THICK CONFORMING TO THE ITEM "ALUMINUM SIGNS (TYPE A)" WHEN ATTACHED TO SIGNAL POLES.

SIGN NO.	SIGN	DIMENSIONS (INCHES)							
		A	B	C	D	E	F	G	H
R10-9	STD.	12	18	3/8	3/4	2	2 C	1	1 1/2
SR10-9S	EXPWY.	18	30	3/8	3/4	3	3 C	1 1/2	1 1/2
SR10-9	FRWY.	24	36	5/8	1	4	4C*	2	1 1/2

* - REDUCE SPACING 40%

SIGN NO.	SIGN	DIMENSIONS (INCHES)									
		A	B	C	D	E	F	G	H	J	
R9-3a	STD.	18	1	5/8	3 1/2	5 1/2	6 3/8	7 7/8	1 1/2	1 1/2	
ER9-3a	EXPWY.	24	1	5/8	4 1/2	7 1/2	8 1/2	10 1/2	2	1 1/2	
FR9-3a	FRWY.	30	1 1/4	3/4	5 3/4	9 1/4	10 5/8	13 3/8	2 1/2	1 7/8	

SIGN NO.	SIGN	DIMENSIONS (INCHES)											
		A	B	C	D	E	F	G	H	J	K	L	
R6-2	STD.	18	24	1	5/8	3	6D	1 7/8	6 5/16	7 7/16	3	1 1/2	
SR6-2	SPEC.	24	30	1	5/8	3	6D	1 7/8	6 5/16	7 7/16	3	1 1/2	

SIGNS

DALLAS DISTRICT STANDARD

FED. RD. DIV. NO.	PROJECT NO.		SHEET NO.
6	STP 96(630)MM		65
STATE	STATE DIST. NO.	COUNTY	
TEXAS	DALLAS	ROCKWALL	
CONT.	SECT.	JOB	HIGHWAY NO.
1014	03	041	FM 740

6239