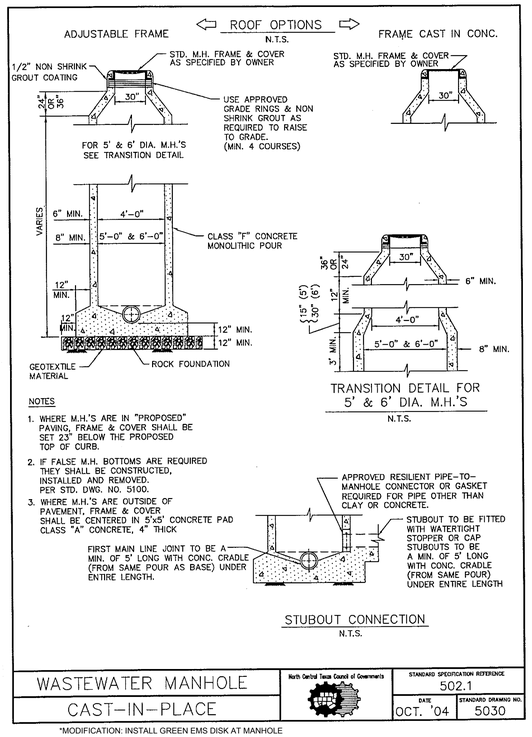

WASTEWATER MANHOLE CAST-IN-PLACE	North Central Texas Council of Governments	STANDARD SPECIFICATION REFERENCE 502.1	DATE OCT. '04	STANDARD DRAWING NO. 5030

*MODIFICATION: INSTALL GREEN EMS DISK AT MANHOLE

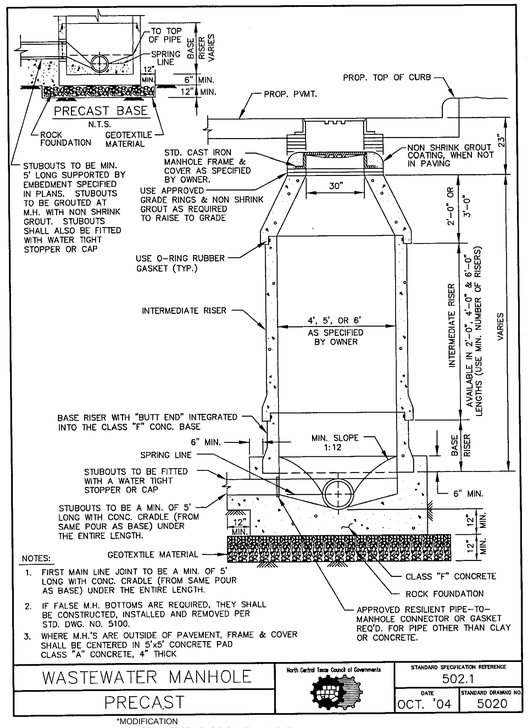

WASTEWATER MANHOLE PRECAST	North Central Texas Council of Governments	STANDARD SPECIFICATION REFERENCE 502.1	DATE OCT. '04	STANDARD DRAWING NO. 5020

*MODIFICATION
1. INSTALL GREEN EMS DISK AT MANHOLE
2. LIP TO BE PRECAST

City of Rockwall

CLASS CONCRETE	BAGS CEMENT PER C.Y.	MIN. STRENGTH 28 - DAY PSI
A	5.5	3000
B	4	2000

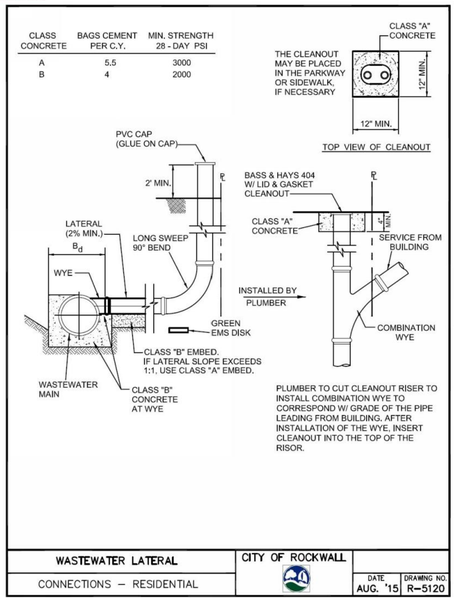

WASTEWATER LATERAL CONNECTIONS – RESIDENTIAL	CITY OF ROCKWALL	DATE AUG. '15	DRAWING NO. R-5120

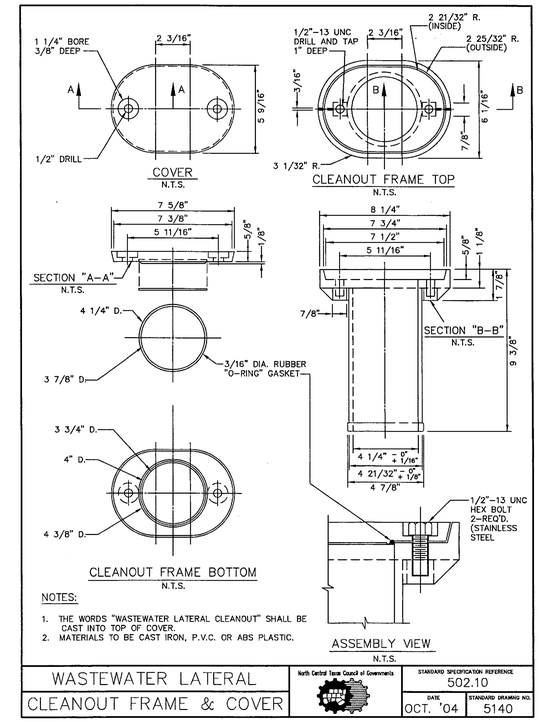

WASTEWATER LATERAL CLEANOUT FRAME & COVER	North Central Texas Council of Governments	STANDARD SPECIFICATION REFERENCE 502.10	DATE OCT. '04	STANDARD DRAWING NO. 5140

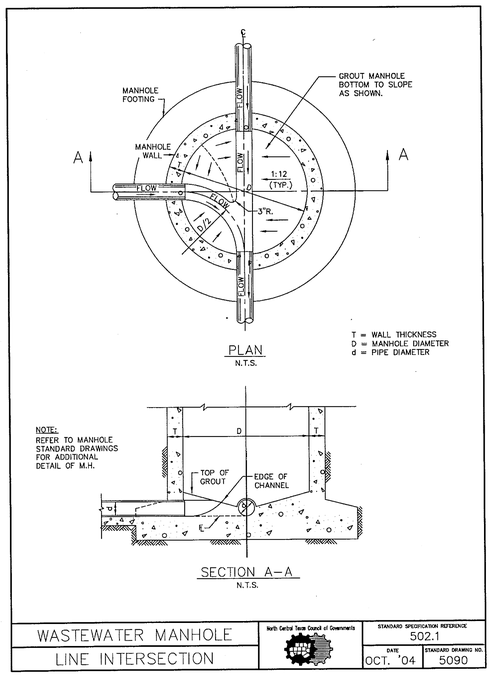

WASTEWATER MANHOLE LINE INTERSECTION	North Central Texas Council of Governments	STANDARD SPECIFICATION REFERENCE 502.1	DATE OCT. '04	STANDARD DRAWING NO. 5090

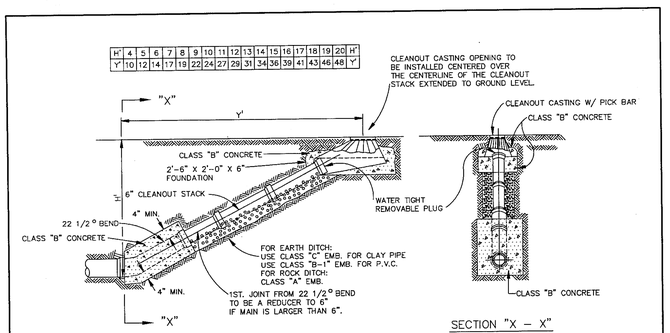

5110	WASTEWATER MAIN CLEANOUT	North Central Texas Council of Governments	STANDARD SPECIFICATION REFERENCE 502.2	DATE OCT. '04	STANDARD DRAWING NO. 5110

*MODIFICATION: PVC PIPE ONLY. NO CLAY PIPE

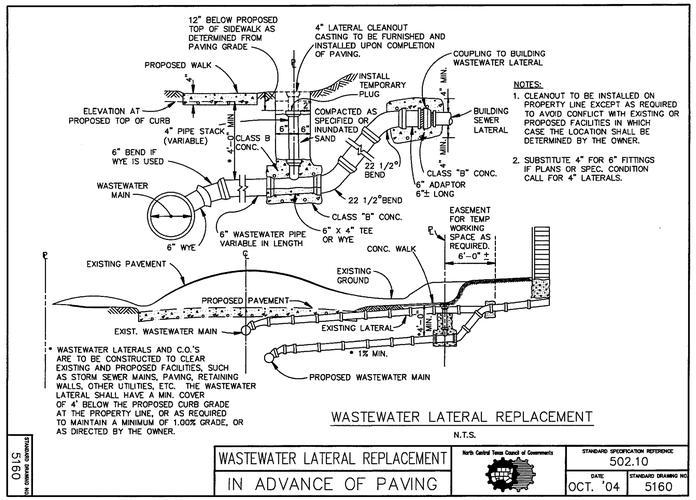

5160	WASTEWATER LATERAL REPLACEMENT IN ADVANCE OF PAVING	North Central Texas Council of Governments	STANDARD SPECIFICATION REFERENCE 502.10	DATE OCT. '04	STANDARD DRAWING NO. 5160

*MODIFICATION
1. INSTALL GREEN EMS DISK AT PROPERTY LINE
2. WYES ONLY. NO TEES

NCTCOG DETAILS HAVE BEEN MODIFIED BY THE CITY OF ROCKWALL. SEE NOTES DESIGNATED *MODIFICATIONS FOR THOSE REVISED.

RECORD DRAWING
THIS IS TO CERTIFY THAT CHANGES AND CORRECTIONS HAVE BEEN MADE TO CONFORM TO THE CONTRACTOR'S RECORD OF THIS PROJECT.
SIGN: Cheralyn Armijo
DATE: 06/01/2020
Glenn Engineering Corporation

NOTE: THE CITY OF ROCKWALL CONSTRUCTION STANDARDS APPLY, WHETHER INDICATED ON THESE PLANS OR NOT.

Stantec
Stantec Architecture Inc.
5717 Legacy Drive Suite 250
Plano, TX 75024-4246
Tel: (214) 473-2400 / Fax: (214) 473-2401
www.stantec.com

Copyright Reserved
The Contractor shall verify and be responsible for all dimensions. DO NOT scale the drawing - any errors or omissions shall be reported to Stantec without delay.
The Copyrights to all designs and drawings are the property of Stantec. Reproduction or use for any purpose other than that authorized by Stantec is forbidden.

Consultants

GLENN ENGINEERING
T.B.P.E. FIRM REGISTRATION NO. F - 303
PHONE 972-717-5151 FAX 972-717-2176
4500 FULLER DRIVE - SUITE 220 IRVING, TEXAS 75038

Notes

ROCKWALL INDEPENDENT SCHOOL DISTRICT

Revision	By	Appd	YYYY.MM.DD
8 - RFI #40	RAH	CMG	2020.05.13
7 - RFI #79 - PC 20 - REV	RAH	CMG	2020.03.13
6 - RFI #116 AND #117	RAH	CMG	2020.01.13
5 - RFI #20 AND #21	RAH	CMG	2019.07.23
4 - RFI #16	RAH	CMG	2019.07.12
3 - CITY COMMENTS	RAH	CMG	2019.04.30
2 - ASI #1 -CITY COMMENTS	RAH	CMG	2019.04.02

Issued	By	Appd	YYYY.MM.DD
100%CD - For Bidding and Construction	RAH	CMG	2019.03.01

Permit-Seal
MIKE GLENN 35059
The seal appearing on this document was authorized by Mike Glenn, P.E. 35059, on May 13, 2020

Client/Project
Rockwall ISD
Elementary School #15
2911 Greenway Drive
Rockwall, TX 75087

Title
SANITARY SEWER DETAILS

Project No. 214000654
Scale AS SHOWN
Revision 8
Drawing No. C 05.11

Plotted: Jun 1, 2020, 2:30 PM by user: john Saved: 7/12/2019 by user: robert
R:\ROCKISD\STONE CREEK ELEM\BIDSET\STONE CREEK DETAILS ONLY.dwg