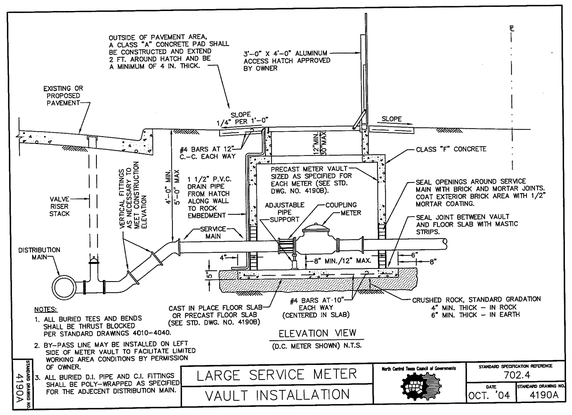

NOTES:
1. ALL BURIED TEES AND BENDS SHALL BE THRUST BLOCKED PER STANDARD DRAWINGS 4010-4040.
2. BY-PASS LINE MAY BE INSTALLED ON LEFT SIDE OF METER VAULT TO FACILITATE LIMITED WORKING AREA CONDITIONS BY PERMISSION OF OWNER.
3. ALL BURIED D.I. PIPE AND C.I. FITTINGS SHALL BE POLY-WRAPPED AS SPECIFIED FOR THE ADJECENT DISTRIBUTION MAIN.

LARGE SERVICE METER VAULT INSTALLATION	North Central Texas Council of Governments	STANDARD SPECIFICATION REFERENCE 702.4	DATE OCT. '04 / STANDARD DRAWING NO. 4190A

4190A

*MODIFICATIONS
1. GATE VALVES TO BE INSTALLED ON BOTH SIDES OF METER
2. STRAINER SHALL BE INSTALLED BEFORE METER
3. DOUBLE CHECK VALVE TO BE INSTALLED AFTER METER
4. INSTALL BY-PASS LINE WITH VALVE

MATERIALS LIST		
PART NO.	QUANTITY	DESCRIPTION
1	2 EA.	4" X 12" D.I. NIPPLE M.J. X F.
2	2 EA.	4" X 4" D.I. TEE F. X F.
3	2 EA.	4" GATE VALVE F. X F.
4	3 EA.	VALVE STACK RISER COVER & LID
5	1 EA.	4" X 40" D.I. NIPPLE F. X SLEEVE
6	1 EA.	4" FLANGED COUPLING ADAPTER
7	1 EA.	4" METER AS SPECIFIED (TYPE F.M. SHOWN)
8	1 EA.	4" X 4" D.I. TEE F. X F. (TEST POINT)
9	1 EA.	4" BLIND FLG.

MATERIALS LIST		
PART NO.	QUANTITY	DESCRIPTION
1	1 EA.	4" X 24" D.I. NIPPLE F. X F.
2	2 EA.	4" X 36" D.I. NIPPLE F. X F.
3	1 EA.	4" D.I. 90° BEND F. X F.
4	1 EA.	4" GATE VALVE F. X M.J.
5	1 EA.	4" D.I. 90° BEND M.J. X F.
6	1 EA.	4" D.I. PIPE, CLASS 52, APPROX. 10'
7	1 EA.	PRECAST METER VAULT
	1 EA.	VAULT FLOOR (NOT SHOWN)
	1 EA.	ACCESS HATCH (NOT SHOWN)
	1 EA.	BY-PASS METER

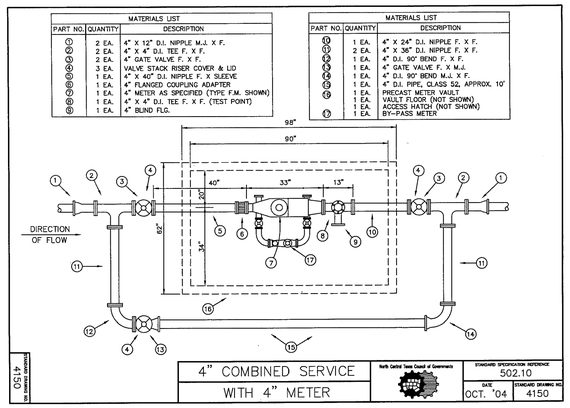

4" COMBINED SERVICE WITH 4" METER	North Central Texas Council of Governments	STANDARD SPECIFICATION REFERENCE 502.10	DATE OCT. '04 / STANDARD DRAWING NO. 4150

4150

*MODIFICATIONS
1. INSTALL STRAINER BETWEEN COUPLING ADAPTER AND METER
2. INSTALL TESTABLE DOUBLE CHECK VALVE AFTER FOUR (4) INCH BLIND VALVE

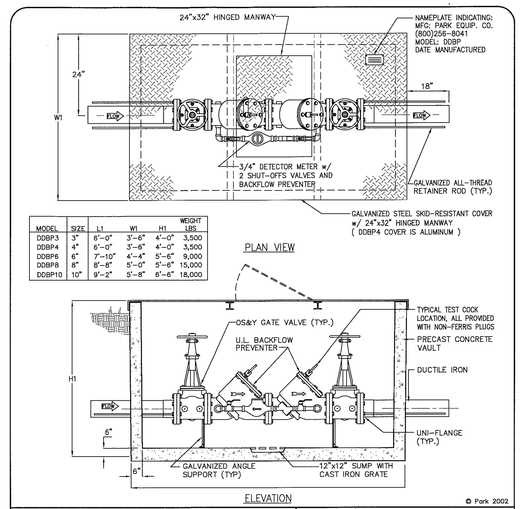

MODEL	SIZE	L1	W1	H1	WEIGHT LBS.
DDBP3	3"	6'-0"	3'-6"	4'-0"	3,500
DDBP4	4"	6'-0"	3'-6"	4'-0"	3,500
DDBP6	6"	7'-10"	4'-4"	5'-6"	9,000
DDBP8	8"	8'-8"	5'-0"	5'-6"	15,000
DDBP10	10"	9'-2"	5'-8"	6'-6"	18,000

Specifications

CONCRETE : Class 1 concrete with design strength of 4500 PSI at 28 days. Unit is of monolithic construction at floor and first stage of wall with sectional riser to required depth.

REINFORCEMENT: Grade 60 reinforced. Steel rebar conforming to ASTM A615 on required centers or equal.

STEEL COVER: 1/4" steel skid-resistant floor plate welded to 3" angle frame with (2) 3"x2-3/8" I beam supports (300 PSF).

Engineering Data

The backflow assembly shall be factory assembled in vault & hydrostatically tested prior to delivery. Field excavation & preparation shall be complete prior to delivery. Pipe, valves and fittings of the assembly shall be approved by one or more of the following associations:

AWWA UL NSF FM

PROJECT :
LOCATION:
CUSTOMER:
GEN.CONTR.:
ORDER # :
DATE:

PARK ENVIRONMENTAL EQUIPMENT 888-811-PARK www.park-USA.com

"Expect the Best"

6" DOUBLE DETECTOR BACKFLOW PREVENTER ASSEMBLY FOR FIRE SERVICE

SCALE	NONE	DWG. NO.	REV.
DATE	01/02	DDBP-1	A

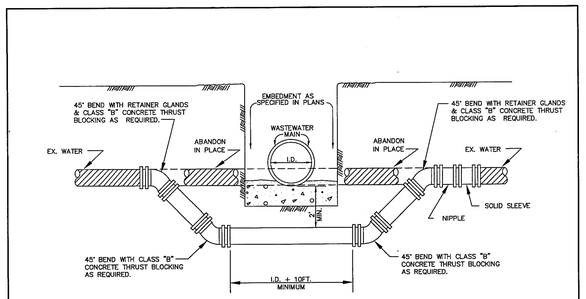

WATER MAIN LOWERING BELOW WASTEWATER MAIN	North Central Texas Council of Governments	STANDARD SPECIFICATION REFERENCE 506.6	DATE OCT. '04 / STANDARD DRAWING NO. 4200

4200

*MODIFICATIONS
1. THE CONCRETE ENCASEMENT SHALL ENCASE ENTIRE WASTEWATER MAIN
2. DEFLECT WATER LINE WHEN POSSIBLE

RECORD DRAWING
THIS IS TO CERTIFY THAT CHANGES AND CORRECTIONS HAVE BEEN MADE TO CONFORM TO THE CONTRACTOR'S RECORD OF THIS PROJECT.
SIGN: Charalyn Arroyo
DATE: 06/01/2020
Glenn Engineering Corporation

City of Rockwall

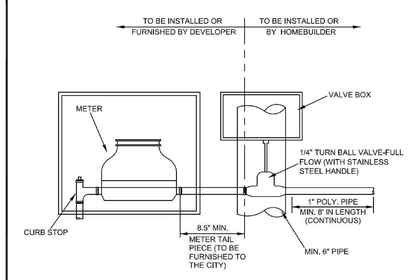

NOTE:
VALVE BOX TO BE TRAFFIC RATED IF UNDER PAVING.

SINGLE SERVICE METER TAIL CONNECTION
NOT TO SCALE

WATER METER DETAIL SINGLE SERVICE	CITY OF ROCKWALL	DATE AUG. '15 / DRAWING NO. R-4145

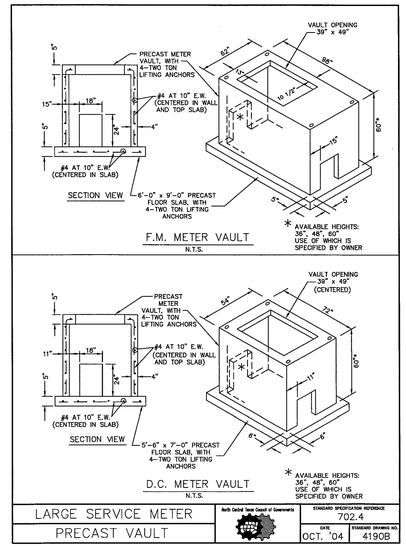

LARGE SERVICE METER PRECAST VAULT	North Central Texas Council of Governments	STANDARD SPECIFICATION REFERENCE 702.4	DATE OCT. '04 / STANDARD DRAWING NO. 4190B

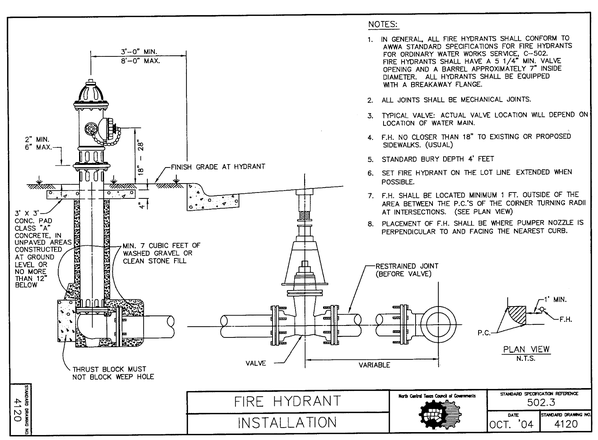

NOTES:
1. IN GENERAL, ALL FIRE HYDRANTS SHALL CONFORM TO AWWA STANDARD SPECIFICATIONS FOR FIRE HYDRANTS FOR ORDINARY WATER WORKS SERVICE, C-502. FIRE HYDRANTS SHALL HAVE A 5 1/4" MIN. VALVE OPENING AND A BARREL APPROXIMATELY 7" INSIDE DIAMETER. ALL HYDRANTS SHALL BE EQUIPPED WITH A BREAKAWAY FLANGE.
2. ALL JOINTS SHALL BE MECHANICAL JOINTS.
3. TYPICAL VALVE: ACTUAL VALVE LOCATION WILL DEPEND ON LOCATION OF WATER MAIN.
4. F.H. NO CLOSER THAN 18" TO EXISTING OR PROPOSED SIDEWALKS. (USUAL)
5. STANDARD BURY DEPTH 4' FEET
6. SET FIRE HYDRANT ON THE LOT LINE EXTENDED WHEN POSSIBLE.
7. F.H. SHALL BE LOCATED MINIMUM 1 FT. OUTSIDE OF THE AREA BETWEEN THE P.C.'S OF THE CORNER TURNING RADII AT INTERSECTIONS. (SEE PLAN VIEW)
8. PLACEMENT OF F.H. SHALL BE WHERE PUMPER NOZZLE IS PERPENDICULAR TO AND FACING THE NEAREST CURB.

FIRE HYDRANT INSTALLATION	North Central Texas Council of Governments	STANDARD SPECIFICATION REFERENCE 502.3	DATE OCT. '04 / STANDARD DRAWING NO. 4120

4120

*MODIFICATIONS
1. ALL JOINTS ARE TO BE RESTRAINED. MEGA-LUG OR APPROVED EQUAL

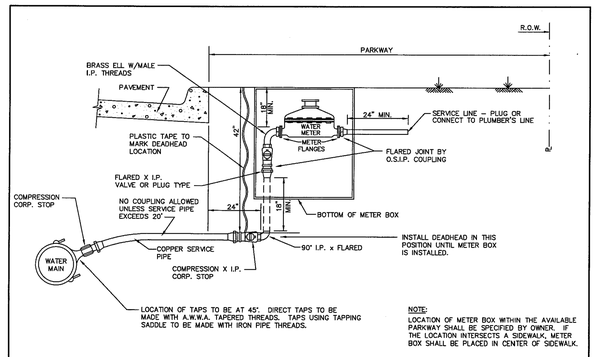

NOTE:
LOCATION OF METER BOX WITHIN THE AVAILABLE PARKWAY SHALL BE SPECIFIED BY OWNER. IF THE LOCATION INTERSECTS A SIDEWALK, METER BOX SHALL BE PLACED IN CENTER OF SIDEWALK.

WATER SERVICE INSTALLATION 1 1/2" OR 2" LINE	North Central Texas Council of Governments	STANDARD SPECIFICATION REFERENCE 502.10	DATE OCT. '04 / STANDARD DRAWING NO. 4140

4140

*MODIFICATIONS
1. COPPER SERVICE LINE SHALL BE 1 1/2" OR 2" I.D. C.T.S. POLY TUBE SDR-9
2. METER BOX SHALL BE TWO FEET, SIX-INCHES (2'-6") FROM BACK OF CURB OR AS DIRECTED BY THE CITY
3. METER BOX SHALL BE EIGHTEEN (18) INCH DIAMETER BY FOURTEEN (14) INCH DEEP
4. BLUE EMS DISK SHALL BE SET AT MAIN LINE
5. SEE CITY DETAIL FOR SERVICE METER TAIL CONNECTION

NCTCOG DETAILS HAVE BEEN MODIFIED BY THE CITY OF ROCKWALL. SEE NOTES DESIGNATED *MODIFICATIONS FOR THOSE REVISED.

NOTE: THE CITY OF ROCKWALL CONSTRUCTION STANDARDS APPLY, WHETHER INDICATED ON THESE PLANS OR NOT.

Plotted: Jun 1, 2020, 2:29 PM by user: john - Saved: 7/12/2019 by user: robert
R:\ROCKISD\STONE CREEK ELEM\BIDSET\STONE CREEK DETAILS ONLY.dwg

Stantec

Stantec Architecture Inc.
5717 Legacy Drive Suite 250
Plano, TX 75024-4246
Tel: (214) 473-2400 / Fax: (214) 473-2401
www.stantec.com

Copyright Reserved

The Contractor shall verify and be responsible for all dimensions. DO NOT scale the drawing - any errors or omissions shall be reported to Stantec without delay.
The Copyrights to all designs and drawings are the property of Stantec. Reproduction or use for any purpose other than that authorized by Stantec is forbidden.

Consultants

GLENN ENGINEERING
T.B.P.E. FIRM REGISTRATION NO. F - 303
PHONE 972-717-5151 FAX 972-717-2176
4500 FULLER DRIVE - SUITE 220 IRVING, TEXAS 75038

Notes

ROCKWALL INDEPENDENT SCHOOL DISTRICT

Revision	By	Appd	YYYY.MM.DD
8 - RFI #40	RAH	CMG	2020.05.13
7 - RFI #79 - PC 20 - REV	RAH	CMG	2020.03.13
6 - RFI #116 AND #117	RAH	CMG	2020.01.13
5 - RFI #20 AND #21	RAH	CMG	2019.07.23
4 - RFI #16	RAH	CMG	2019.07.12
3 - CITY COMMENTS	RAH	CMG	2019.04.30
2 - ASI #1 -CITY COMMENTS	RAH	CMG	2019.04.02

Issued	By	Appd	YYYY.MM.DD
100%CD - For Bidding and Construction	RAH	CMG	2019.03.01

Permit-Seal

STATE OF TEXAS
MIKE GLENN
35059
LICENSED PROFESSIONAL ENGINEER

The seal appearing on this document was authorized by Mike Glenn, P.E. 35059, on May 13, 2020

Client/Project
Rockwall ISD

Elementary School #15

2911 Greenway Drive
Rockwall, TX 75087

Title
WATER DETAILS 2

Project No. 214000654
Scale AS SHOWN

Revision 8
Drawing No. C 05.08