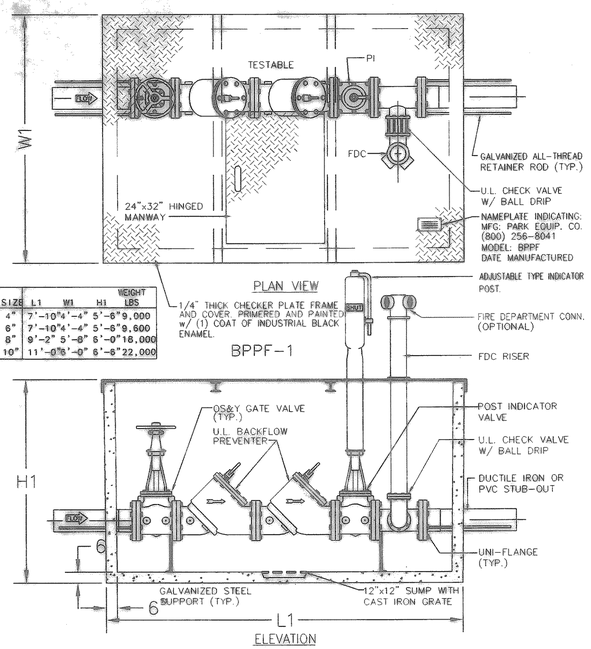

MODEL	SIZE	L1	W1	H1	WEIGHT LBS
BPPF4	4"	7'-10"	4'-4"	5'-6"	9,000
BPPF6	6"	7'-10"	4'-4"	5'-6"	9,600
BPPF8	8"	9'-2"	5'-8"	6'-0"	16,000
BPPF10	10"	11'-0"	6'-0"	6'-6"	22,000

4" THRU 10" DOUBLE CHECK BACKFLOW PREVENTER ASSEMBLY w/ P.I.V. & F.D.C.

NOT TO SCALE

Specifications

CONCRETE : Class 1 concrete with design strength of 4500 PSI at 28 days. Unit is of monolithic construction at floor and first stage of wall with sectional riser to required depth.

REINFORCEMENT: Grade 60 reinforced. Steel rebar conforming to ASTM A615 on required centers or equal.

STEEL COVER: 1/4" steel skid-resistant floor plate welded to 3" angle frame with (2) 3"x2-3/8" I beam supports.

Engineering Data

Field excavation and preparation shall be completed prior to delivery of assembly. Use dimensional data as shown. Pipe, valves and fittings of the assembly are approved by one or more of the following associations:

AWWA UL UPC FM

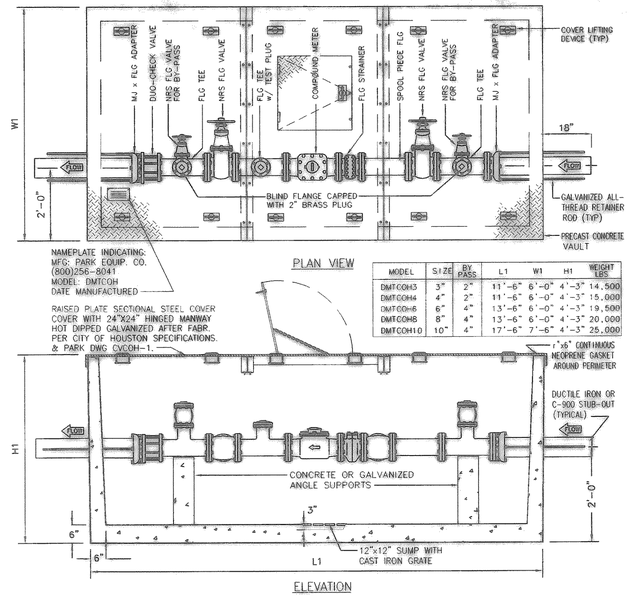

MODEL	SIZE	BY PASS	L1	W1	H1	WEIGHT LBS
DMTCOH3	3"	2"	11'-6"	6'-0"	4'-3"	14,500
DMTCOH4	4"	2"	11'-6"	6'-0"	4'-3"	15,000
DMTCOH6	6"	4"	13'-6"	6'-0"	4'-3"	19,500
DMTCOH8	8"	4"	13'-6"	6'-0"	4'-3"	20,000
DMTCOH10	10"	4"	17'-6"	7'-6"	4'-3"	25,000

DOMESTIC WATER COMPOUND METER ASSEMBLY

NOT TO SCALE

Specifications

CONCRETE : Class 1 concrete with design strength of 4500 PSI at 28 days. Unit is of monolithic construction at floor and first stage of wall with sectional riser to required depth.

REINFORCEMENT: Grade 60 reinforced. Steel rebar conforming to ASTM A615 on required centers or equal.

STEEL COVER: All steel fabrication shall be in accordance to AWA D11.1. Steel shall be ASTM A36 carbon steel, and hot dipped galvanized after fabrication in accordance to ASTM A123. Standard cover is rated for 50 PSF.

Engineering Data

Field excavation and preparation shall be completed prior to delivery of assembly. Use dimensional data as shown. Pipe, valves and fittings of the assembly are approved by one or more of the following associations:

AWWA UL UPC FM

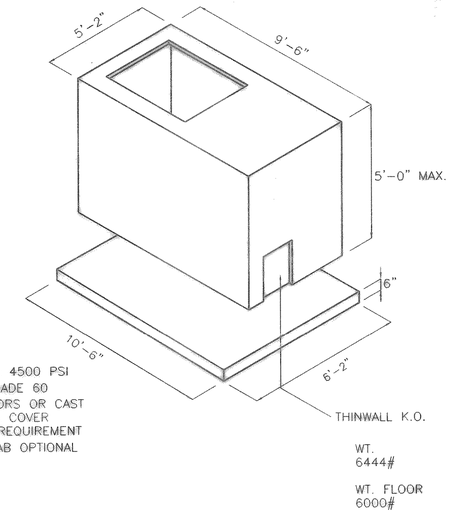

1. CONCRETE: 4500 PSI
2. REINF.: GRADE 60
3. METAL DOORS OR CAST IN RING & COVER PER JOB REQUIREMENT
4. FLOOR SLAB OPTIONAL

WT. 6444#

WT. FLOOR 6000#

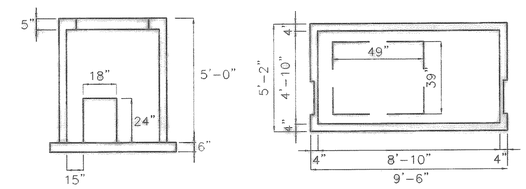

METER VAULT DETAIL

NOT TO SCALE

UTILITY DETAILS

AS SHOWN

These Drawings have been modified to conform to the Construction Records. Glenn Engineering Corporation

By M. Glenn Date: 2-23-04

METER VAULT & BYPASS SPECIFICATIONS

1. NOTIFY THE CONSTRUCTION INSPECTION DEPARTMENT (542-2675) PRIOR TO CONSTRUCTION OF VAULT OR BY-PASS ASSEMBLY.

2. THE METER VAULT CAN BE EITHER POURED IN PLACE OR PREFABRICATED. IF THE VAULT IS POURED IN PLACE, CONCRETE SHALL BE AT LEAST 6-INCHES THICK AND BE 3000 PSI REINFORCED WITH #4 STEEL BARS ON 12-INCH CENTERS EACH WAY. PREFABRICATED VAULTS SHALL BE AT LEAST 4-INCHES THICK AND 4500 PSI CONCRETE #4 STEEL BARS ON 8-INCH CENTERS.

3. THE VAULT SHALL NOT BE LOCATED IN ANY DRIVE OR PARKING AREAS AND MUST BE LOCATED IN A UTILITY EASEMENT.

4. A DRAWING WITH THE EXACT MEASUREMENTS OF THE VAULT SHALL BE GIVEN FOR THE METER AND BY-PASS ASSEMBLY.

5. THE VAULT LID SHALL BE A BILCO LID, TYPE Q-4 SINGLE LEAF DESIGN. ANGLE FRAME IS 1/4-INCH STEEL WITH STRAP ANCHORS BOLTED TO THE EXTERIOR. THE LEAF IS 1/4-INCH STEEL DIAMOND PATTERN PLATE, PIVOTING ON TORSION BARS FOR EASY OPERATION. THE MINIMUM LIVE LOAD CAPACITY IS 150 LBS. PER SQUARE FOOT. THE SIZE OF THE LID IS 3-FEET BY 3-FEET.

6. THE LID SHALL BE PAINTED WITH 43-38 TNEMEC DIFFUSED ALUMINUM PAINT OR APPROVED EQUAL.

7. CONTRACTOR MUST PROVIDE A 2-INCH TEST TAP LOCATED AT LEAST TWO PIPE DIAMETERS DOWNSTREAM OF METER. THE TAP MUST BE MADE USING AN APPROVED SERVICE SADDLE.

8. THE STRAINER METER AND FLEXIBLE COUPLING SHALL NOT BE SET UNTIL METER VAULT AND TARS ARE INSPECTED BY THE CITY OF MCKINNEY CONSTRUCTION INSPECTION DEPARTMENT.

9. THE GATE VALVES ARE REQUIRED TO BE MUELLER A-2370-6 FLANGED RESILIENT SEAT GATE VALVES.

10. THE BOTTOM OF THE METER VAULT MUST BE 6-INCHES THICK CONCRETE WITH #4 REBAR ON 12-INCH CENTERS AND HAVE A 4-INCH FILL SAND CUSHION UNDERNEATH. A SUMP 4-INCHES DEEP AND 12-INCHES IN DIAMETER SHALL BE INSTALLED TO ONE SIDE OF THE CENTER OF THE BOTTOM SLAB. IF PRECAST VAULT IS USED WHERE SIDES JOIN THE BOTTOM, A LAYER RAMNEK SHALL BE USED TO SEAL THE JOINT.

11. CONTRACTOR SHALL HAVE A CHOICE OF EITHER HAVING A LINK SEAL WALL SLEEVE MODEL WS-8-32-S-G FOR A 4-INCH PIPE, WS-1036-S-G FOR WS-12-37-S-G FOR 8-INCH PIPE CAST IN THE VAULT FOR HAVE THE VAULT WALL CORED BEFORE INSTALLATION OF VAULT AND PIPING IN EITHER CASE. A LINK SEAL, MODEL NO. LS-400-C MUST BE USED TO SEAL THE ANNULAR SPACE BETWEEN THE PIPE AND WALL OPENING. BREAKING OF THE WALL WITH A JACKHAMMER IS NOT PERMITTED.

12. THERE SHALL BE A CONCRETE SUPPORT UNDER EACH VALVE.

13. DEPTH OF VAULT SHALL BE A MINIMUM OF 4-1/2 FEET.

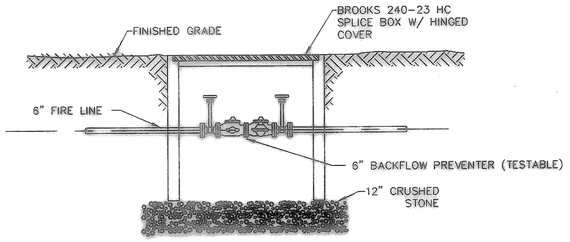

8" BACKFLOW PREVENTER DETAIL

NO SCALE

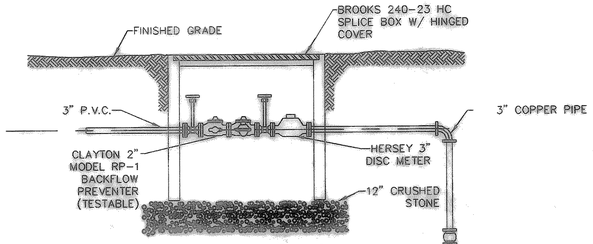

WATER METER AND BACKFLOW PREVENTER DETAIL

NO SCALE

DATE MAY 18, 2001
DRAWN BY JTW
CHECKED RAH
COMM NO. 1441-01-017
REVISED

ROCKWALL ELEMENTARY #9

ROCKWALL INDEPENDENT SCHOOL DISTRICT

ROCKWALL, TEXAS

FINAL PLANS FOR BIDDING AND CONSTRUCTION

STATE OF TEXAS — RAYMOND A. HOLLIS — 53089 — REGISTERED PROFESSIONAL ENGINEER

SHW Group Inc. Architects + Engineers

SHEET NUMBER 15 OF 22

C 2.18

SET NUMBER

© 1999 SHW Group, Inc.

H:\ROCK\SEDLAKVIEW-SUMMIT WO\BID-SET\LAKEVIEW-SUMMIT-8-DBBID-ALL.dwg, UTILITY-DETAILS-WATER2, 07/19/01 02:54:00 PM, 1:1, Rick-HT