D221

Rockwall Technology Park

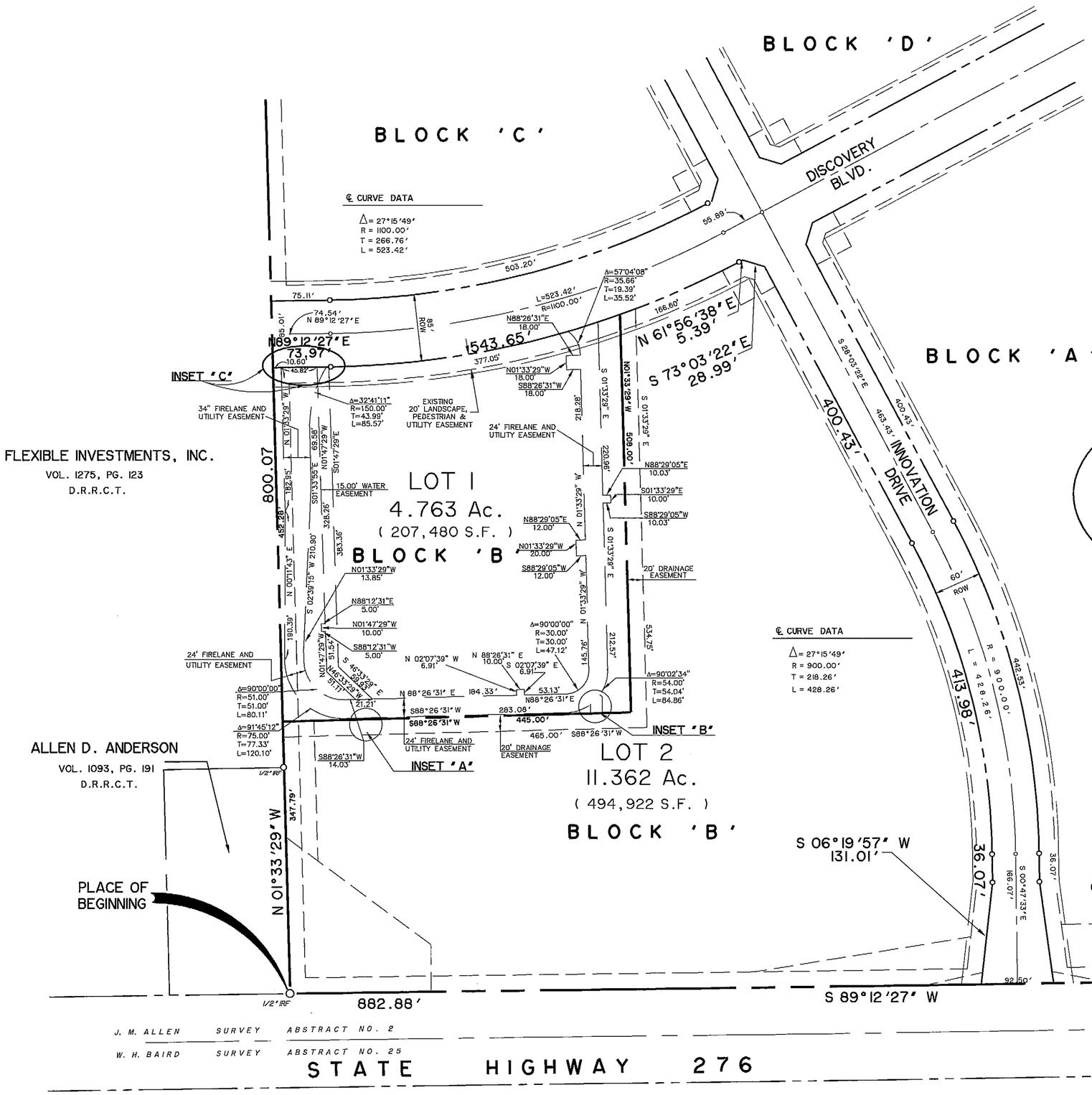


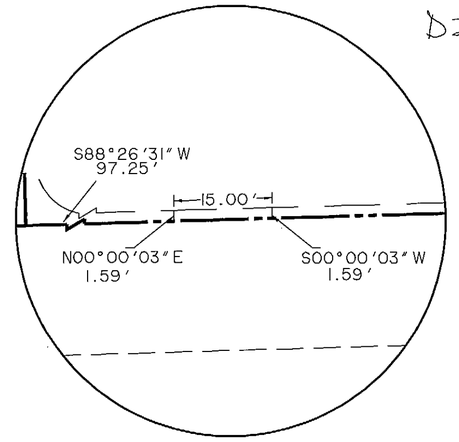


INSET "A"
15' WATER EASEMENT

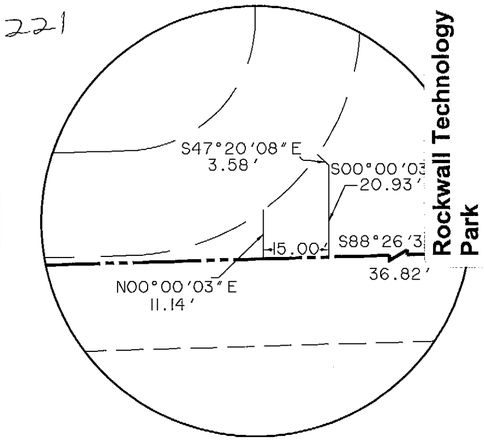


INSET "B"
15' WATER EASEMENT

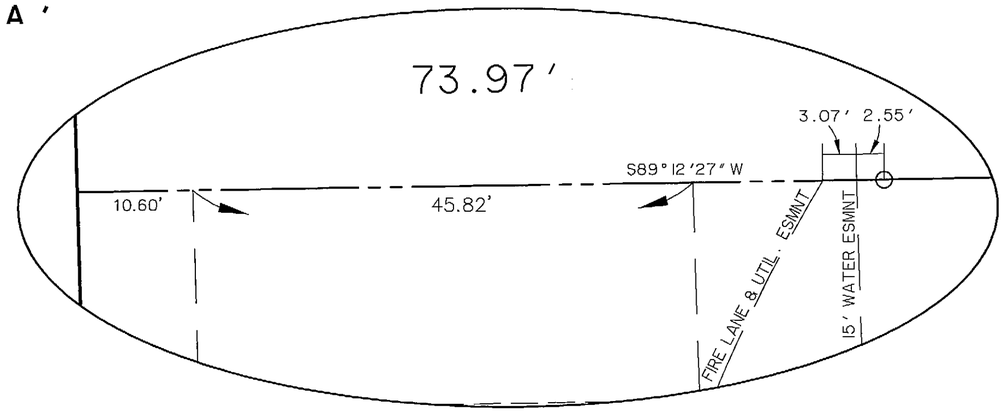


INSET "C"
FIRE LANE AND UTILITY EASEMENT TIE

NOTE: THE PURPOSE OF THIS DOCUMENT IS TO SUBDIVIDE BLOCK "B" AND TO PLACE TXU EASEMENTS IN SEVERAL LOCATIONS THROUGHOUT THE ROCKWALL TECHNOLOGY PARK.

0 100 200 300 400
1" = 100'

REPLAT
LOT 1 & LOT 2
BLOCK B

# ROCKWALL TECHNOLOGY PARK

BEING 16.125 ACRES OF LAND SITUATED IN THE J.M. ALLEN SURVEY, ABSTRACT NO.2, CITY OF ROCKWALL, ROCKWALL COUNTY, TEXAS.

NOTE:

It shall be the policy of the City of Rockwall to withhold issuing building permits until all streets, water, sewer and storm drainage systems have been accepted by the City. The approval of a plat by the City does not constitute any representation, assurance or guarantee that any building within such plat shall be approved, authorized or permit therefore issued, nor shall such approval constitute any representation, assurance or guarantee by the City of the adequacy and availability for water for personal use and fire protection within such plat, as required under Ordinance 83-54.

OWNER:
FALCON FINE WIRE & WIRE PRODUCTS, INC.
2462 MERRITT DRIVE
GARLAND, TEXAS 75041
( 972 ) 278-2044
Volume 1714, Page 63
D.R.R.C.T.

OWNER:
ROCKWALL ECONOMIC DEVELOPMENT CORPORATION
697 E. INTERSTATE 30
ROCKWALL, TEXAS 75087-0968
( 972 ) 772-0025
Volume 01410, Page 00247
D.R.R.C.T.


PREPARED BY:
WIER & ASSOCIATES, INC.
ENGINEERS SURVEYORS LAND PLANNERS
4300 BELTWAY PLACE SUITE 130 ARLINGTON, TEXAS 76018 METRO (817)467-7700
4108 AMON CARTER BLVD. SUITE 200 FORT WORTH, TEXAS 76155 (817)355-9437


27

DATE: 12-14-99
FILE: RPLTBK_B.dwg
W.A. No. 98041

SHEET 2 OF 3

2

TIME: 5:26PM