PROFILE: LINE "ST-12"

5 YEAR STORM

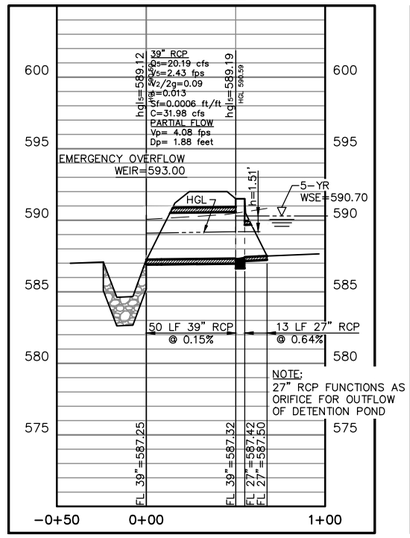

27" RCP AS ORIFICE
Q = CA√2gh
C = 0.60
A = AREA ORIFICE OPENING
g = 32.2 ft/sec²
h = 1.11 ft
AREA ORIFICE OPENING = 3.98 sq. ft.
Q THROUGH ORIFICE = 20.19 cfs
MAX Q_5 = 20.32 cfs

PROFILE: LINE "ST-12"

10 YEAR STORM

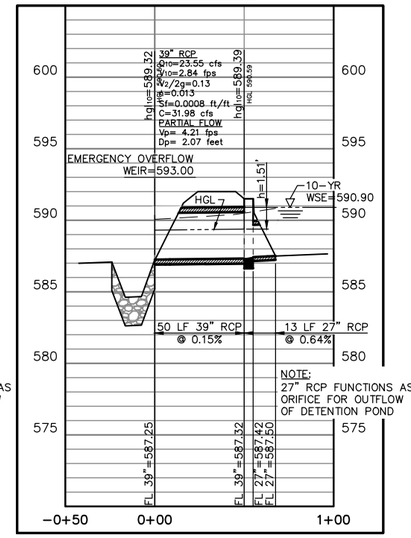

27" RCP AS ORIFICE
Q = CA√2gh
C = 0.60
A = AREA ORIFICE OPENING
g = 32.2 ft/sec²
h = 1.51 ft
AREA ORIFICE OPENING = 3.98 sq. ft.
Q THROUGH ORIFICE = 23.55 cfs
MAX Q_{10} = 23.55 cfs

PROFILE: LINE "ST-12"

25 YEAR STORM

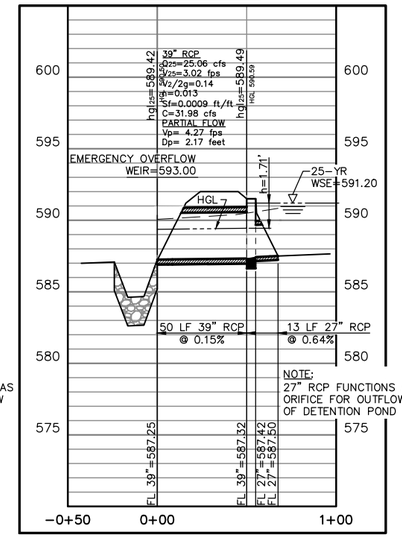

27" RCP AS ORIFICE
Q = CA√2gh
C = 0.60
A = AREA ORIFICE OPENING
g = 32.2 ft/sec²
h = 1.71 ft
AREA ORIFICE OPENING = 3.98 sq. ft.
Q THROUGH ORIFICE = 25.06 cfs
MAX Q_{25} = 25.6 cfs

PROFILE: LINE "ST-12"

100 YEAR STORM

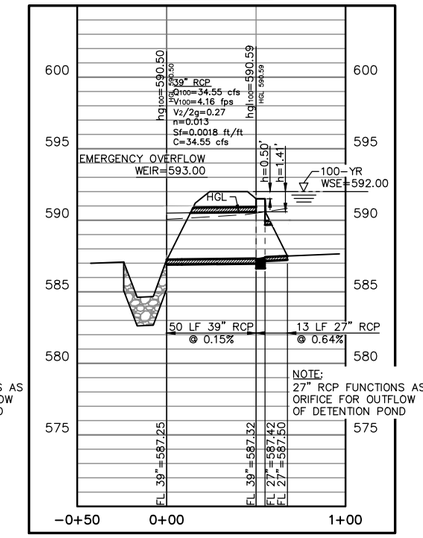

27" RCP AS ORIFICE
Q = CA√2gh
C = 0.60
A = AREA ORIFICE OPENING
g = 32.2 ft/sec²
h = 1.41 ft
AREA ORIFICE OPENING = 3.98 sq. ft.
Q THROUGH ORIFICE = 22.75 cfs

30"x30" GRATE ORIFICE (SECONDARY)
Q = CA√2gh
C = 0.60
A = AREA ORIFICE OPENING
g = 32.2 ft/sec²
h = 0.50 ft (ASSUMING FREE DISCHARGE)
AREA ORIFICE OPENING = 3.47 sq. ft.
Q THROUGH ORIFICE = 11.80 cfs

TOTAL Q_{100} = 34.55 cfs

CONTRACTOR TO VERIFY GRATE OPENING AREA, MODIFY AS REQUIRED & CONTACT ENGINEER AS REQUIRED

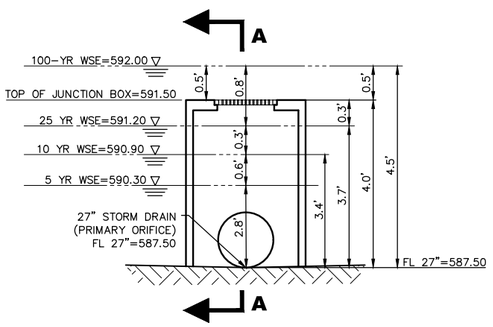

SECTION B-B ORIFICE DETAILS

NTS

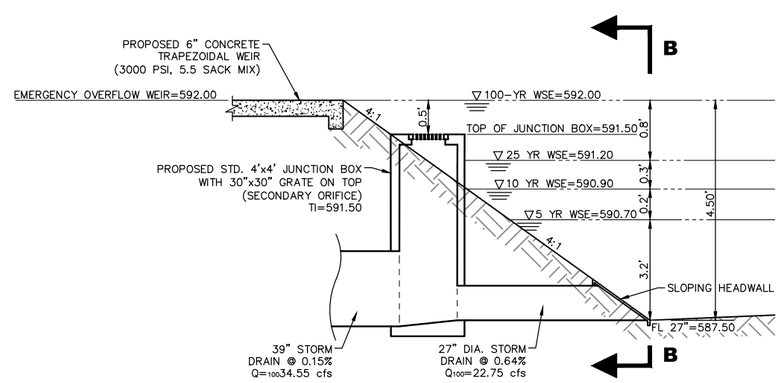

SECTION A-A ORIFICE DETAILS

NTS

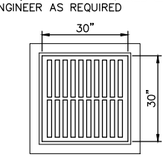

DETAIL FOR No. 30"x30" GRATE

AREA OF OPENING = 3.47 sq. ft.
NTS

RECORD DRAWING

THE SIGNED AND SEALED CONSTRUCTION DOCUMENT HAS BEEN REVISED TO REFLECT CONSTRUCTION RECORDS MAINTAINED AND PROVIDED BY THE CONTRACTOR FOR THIS PROJECT. THE INFORMATION SHOWN ON THIS RECORD DRAWING, WHICH WAS PROVIDED BY THE CONTRACTOR, OR OTHERS NOT ASSOCIATED WITH THE DESIGN ENGINEER, CANNOT BE VERIFIED FOR ACCURACY OR COMPLETENESS. PACHECO KOCH SHALL ASSUME NO LIABILITY FOR ANY CHANGES MADE DURING CONSTRUCTION THAT WERE NOT SPECIFICALLY APPROVED BY THE ENGINEER PRIOR TO CONSTRUCTION. THE SEALED CONSTRUCTION DRAWINGS ARE ON FILE AT THE OFFICES OF PACHECO KOCH.

ATTESTED BY:

SIGNATURE:

ENGINEER OF RECORD: CHET LEUGERS, P.E.

CONTRACTOR: MILLER-VALENTINE CONSTRUCTION

DATE REVISED: 06/08/2017

NO.	DATE	REVISION
3	06/09/2017	RECORD DRAWINGS

Pacheco Koch
7557 RAMBLER ROAD, SUITE 1400
DALLAS, TX 75231 972.235.3031
TX REG. ENGINEERING FIRM F-14439
TX REG. SURVEYING FIRM LS-10193805

DETENTION CALCULATIONS SHEET

ROCKWALL MANUFACTURING FACILITY

LOT 1, BLOCK A, ROCKWALL TECHNOLOGY PARK, PHASE IV

CITY OF ROCKWALL, ROCKWALL COUNTY, TEXAS

DESIGN	DRAWN	DATE	SCALE	NOTES	FILE	NO.
CTL	RHB	JULY 2016	N.T.S.			C3.4

Rockwall Manufacturing Facility

Case Number: SP2016-12

JNELSON
6/14/2017 11:53 AM
M:\DWG-37\3782-16.054\DWG\CIVIL C3D 2015\3782-16.054DAMS.DWG