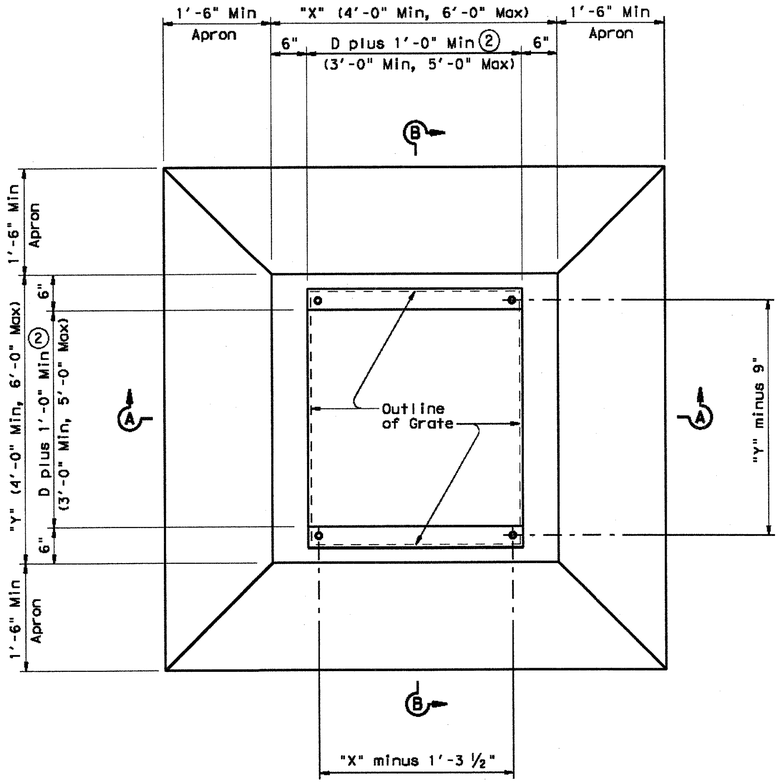

PLAN

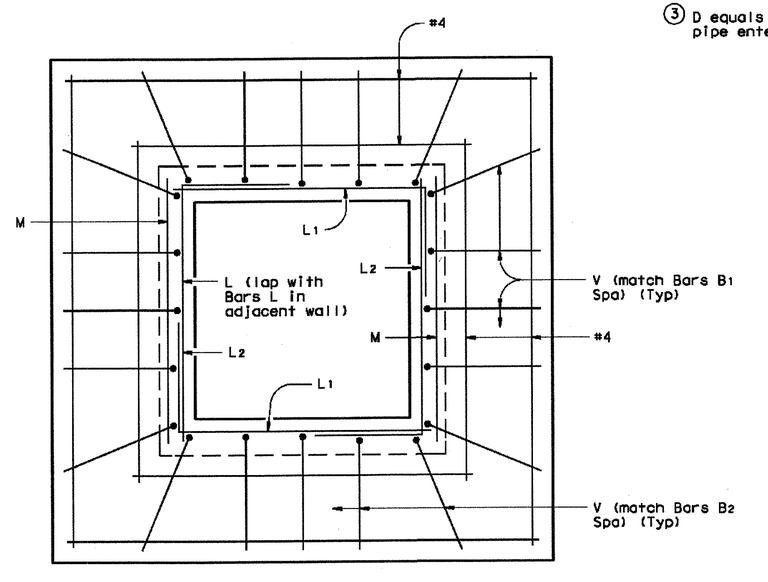

TYPICAL APRON PLAN

(Showing reinforcing in walls and in apron)

① May be changed as directed by the Engineer.

② D equals the maximum inside diameter of any pipe entering the wall shown or the opposite wall.

③ D equals the maximum inside diameter of any pipe entering the inlet.

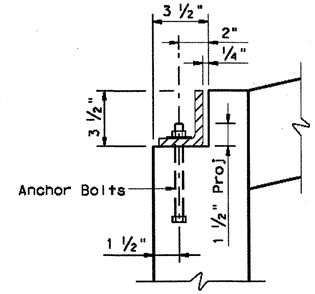

GRATE MOUNTING DETAIL

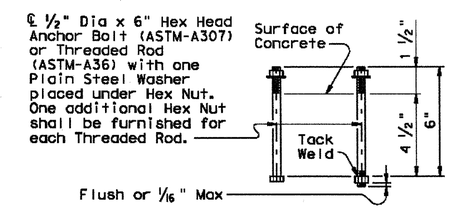

ANCHOR BOLT OPTIONS

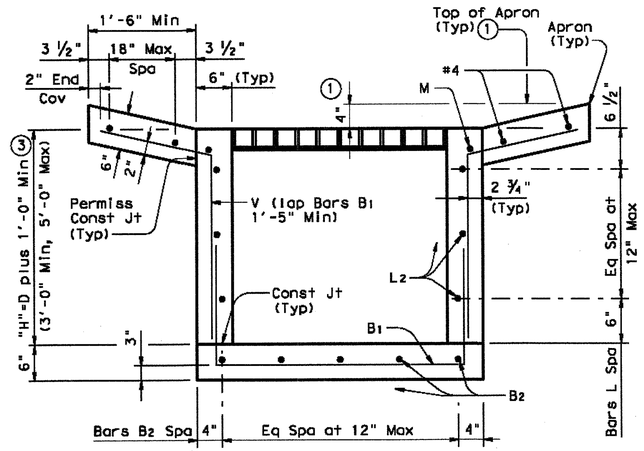

SECTION A-A

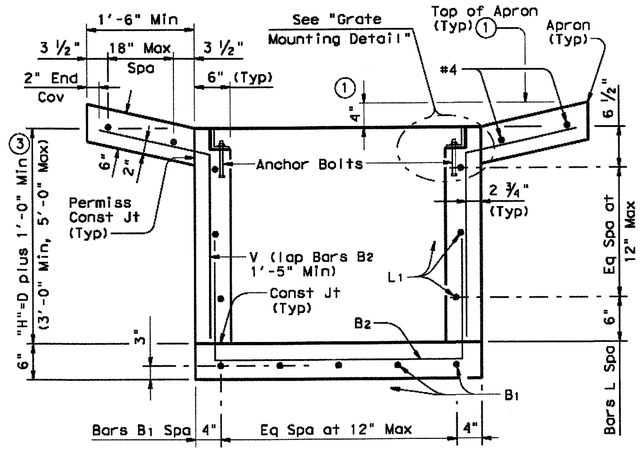

SECTION B-B

SHEET 1 OF 2

Texas Department of Transportation
Bridge Division

HORIZONTAL INLET TYPE H WITH GRATE (MAX 48" DIA PIPES)

IL-H-G

FILE: ilhste01.dgn	DN: TxDOT	CK: TxDOT	DW: TxDOT	CK: TxDOT
© TxDOT May 2005	DISTRICT	FEDERAL AID PROJECT		SHEET
REVISIONS	COUNTY	CONTROL	SECT	JOB	HIGHWAY

DISCLAIMER:
The use of this standard is governed by the "Texas Engineering Practice Act". No warranty of any kind is made by TxDOT for any purpose whatsoever. TxDOT assumes no responsibility for the conversion of this standard to other formats or for incorrect results or damages resulting from its use.

LEVELS DISPLAYED | PATH:

TWILLIAMS 04/29/2010 - 4:14PM
N:\JOBS\1300-1399\1393-08-087\DWG\1393-08-087-07A.DWG

TEXAS BOARD OF PROFESSIONAL ENGINEERS, CERTIFICATE OF REGISTRATION #F-000481; TEXAS BOARD OF PROFESSIONAL LAND SURVEYING, CERTIFICATE OF REGISTRATION 100421-00

C8.07

PI NO: 1393-08-087

DWG NO: 1393-08-087-07A.DWG