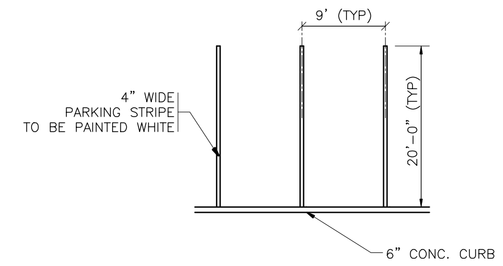

1 TYPICAL PARKING SPACE STRIPING
NOT TO SCALE

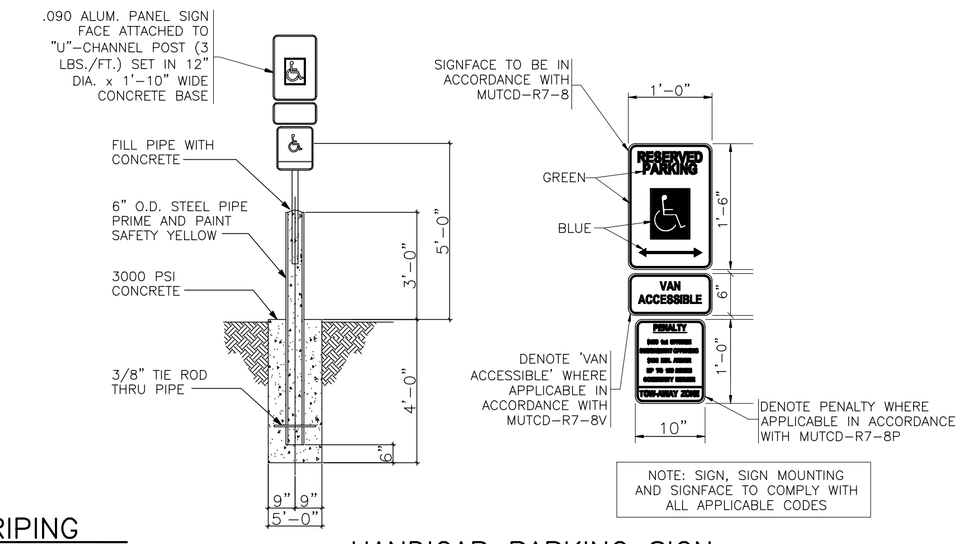

2 HANDICAP PARKING SIGN
NOT TO SCALE

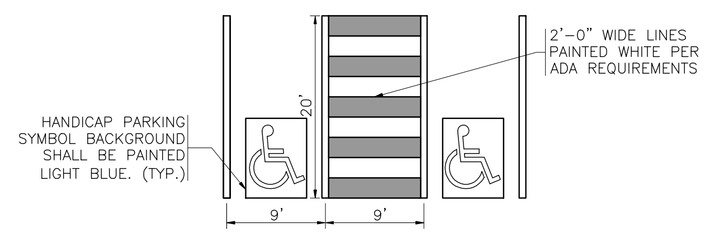

3 HANDICAP PARKING STRIPING
NOT TO SCALE

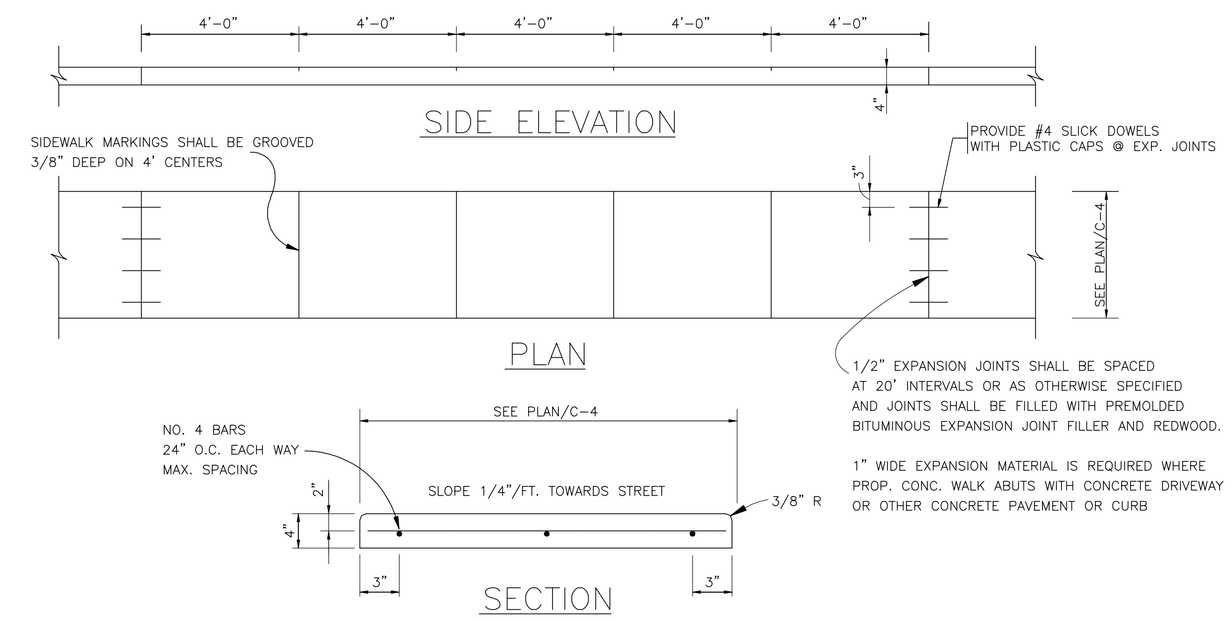

4 REINFORCED CONCRETE SIDEWALK (TYP.)
NOT TO SCALE

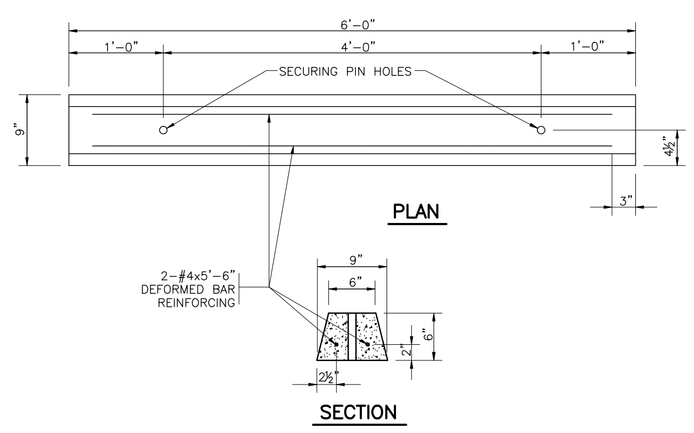

5 TYPICAL PARKING BARRIER
NOT TO SCALE
ONLY ON PARKING SPACES THAT ARE 20' IN LENGTH

6 FIRELANE STRIPING
NOT TO SCALE

g W C engineering, LP
4201 Spring Valley Road Ste. 1120
Farmers Branch, Tx 75244
(tel)469-374-0810 (fax)469-374-0811
(email) production@gwcengineering.com

Preston Engineering & Construction
12770 Coit Rd., Suite # 902 Dallas, TX 75251
Phone 972-991-0498 Fax 972-991-0499

New Facility for New Car Dealership

Rockwall Kia

1790 East Interstate 30
Rockwall, Texas

AS-BUILT DRAWINGS

STATE OF TEXAS
J. BRIAN CAMPBELL
75554
LICENSED PROFESSIONAL ENGINEER
11/13/08

REVISIONS:

DRAWN BY:	IMH
CHECKED BY:	JBC
ISSUE DATE:	JUN 2008
JOB NUMBER:	50304

SHEET NO:

C-8