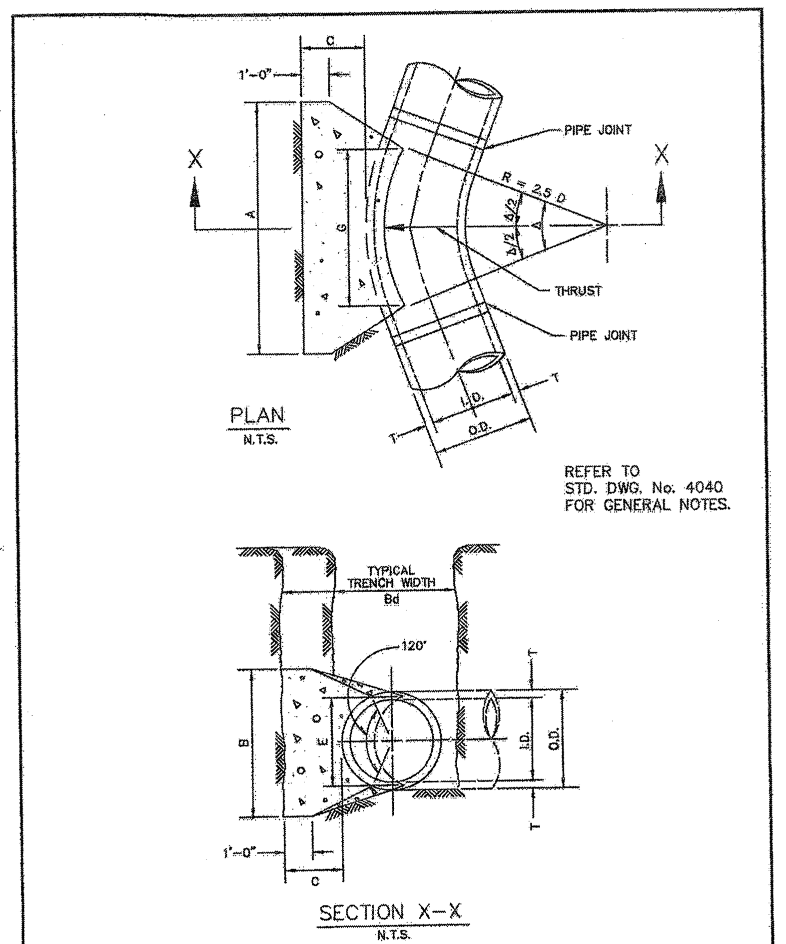

REFER TO STD. DWG. No. 4040 FOR GENERAL NOTES.

HORIZONTAL THRUST BLOCK AT PIPE BEND — North Central Texas Council of Governments — STANDARD SPECIFICATION REFERENCE 502.4 — DATE OCT. '04 — STANDARD DRAWING NO. 4010A

I.D. (IN.)	T (IN.)	Δ = 11.25° C (FT.)	Δ = 22.50° C (FT.)	E (FT.)
4,6,8	0.4	1.5	1.5	0.9
10,12	0.5	1.5	1.5	1.2
16,18	0.6	1.5	1.5	1.6
20	0.7	1.5	1.5	1.8
24	0.9	1.5	1.5	2.1
30	2.9	1.5	1.9	2.6
36	4.5	1.5	2.3	3.3
42	5.0	1.8	2.6	3.8
48	5.5	2.0	3.0	4.3
54	6.0	2.3	3.4	4.8
60	6.5	2.5	3.8	5.3
66	6.8	2.8	4.1	5.7
72	7.5	3.0	4.5	6.3
78	7.5	3.3	4.9	6.7
84	8.0	3.5	5.3	7.2
90	8.5	3.8	5.6	7.7
96	9.0	4.0	6.0	8.2

	Δ = 11.25°		EARTH			ROCK				Δ = 22.50°		EARTH			ROCK		
I.D. (IN.)	G (FT.)	THRUST (TONS)	A (FT.)	B (FT.)	VOL. (C.Y.)	A (FT.)	B (FT.)	VOL. (C.Y.)	I.D. (IN.)	G (FT.)	THRUST (TONS)	A (FT.)	B (FT.)	VOL. (C.Y.)	A (FT.)	B (FT.)	VOL. (C.Y.)
4,6,8	0.4	1.0	1.0	1.5	0.1	1.0	1.0	0.1	4,6,8	0.8	2.0	1.5	1.5	0.1	1.0	1.0	0.1
10,12	0.6	2.2	1.5	1.5	0.1	1.0	1.5	0.1	10,12	1.1	4.4	2.0	2.5	0.3	1.5	1.5	0.1
16,18	0.8	5.0	2.0	2.5	0.3	1.5	2.0	0.2	16,18	1.6	9.9	3.0	3.5	0.6	2.0	2.5	0.3
20	0.9	6.2	2.0	3.5	0.4	1.5	3.0	0.3	20	1.8	12.3	3.5	3.5	0.7	2.0	3.0	0.4
24	1.1	8.9	3.0	3.5	0.5	1.5	3.0	0.3	24	2.2	17.7	4.0	4.5	1.0	3.0	3.5	0.5
30	1.4	10.4	3.0	3.5	0.6	2.0	3.5	0.4	30	2.7	20.7	5.0	4.5	1.5	3.0	4.0	0.8
36	1.7	15.0	3.5	4.5	0.9	2.0	4.0	0.5	36	3.3	29.8	5.5	5.5	2.3	4.0	4.0	1.3
42	1.9	20.4	4.5	5.0	1.5	2.5	5.0	0.8	42	3.8	40.5	7.0	6.0	3.9	4.5	5.0	2.1
48	2.2	26.6	4.5	6.0	2.0	2.5	6.0	1.1	48	4.4	52.9	8.0	7.0	5.7	4.5	6.0	2.8
54	2.5	33.7	6.0	6.0	3.0	3.0	6.0	1.4	54	4.9	67.0	9.0	8.0	8.0	6.0	6.0	4.1
60	2.7	41.6	6.0	7.0	3.8	3.0	7.0	1.8	60	5.5	82.7	9.5	9.0	10.6	6.0	7.0	5.3
66	3.0	50.3	6.5	8.0	5.1	3.5	8.0	2.7	66	6.0	100.1	10.5	10.0	14.1	6.5	8.0	7.2
72	3.3	59.9	7.5	8.0	6.3	4.0	8.0	3.3	72	6.6	119.1	11.0	11.0	17.6	7.5	8.0	9.1
78	3.6	70.2	8.0	9.0	8.1	4.0	9.0	3.9	78	7.1	139.8	12.0	12.0	22.5	8.0	9.0	11.7
84	3.8	81.5	8.5	10.0	10.3	4.5	10.0	5.3	84	7.6	162.1	13.0	12.5	27.2	8.5	10.0	14.8
90	4.1	93.5	9.5	10.0	12.2	5.0	10.0	6.3	90	8.2	186.1	14.0	13.5	33.7	9.5	10.0	17.7
96	4.4	106.4	10.0	11.0	15.0	5.0	11.0	7.4	96	8.7	211.7	15.0	14.5	41.2	10.0	11.0	21.8

TABLES OF DIMENSIONS AND QUANTITIES

HORIZONTAL THRUST BLOCK AT PIPE BEND — North Central Texas Council of Governments — STANDARD SPECIFICATION REFERENCE 502.4 — DATE OCT. '04 — STANDARD DRAWING NO. 4010B

	Δ = 30°		EARTH			ROCK				Δ = 45°		EARTH			ROCK		
I.D. (IN.)	G (FT.)	THRUST (TONS)	A (FT.)	B (FT.)	VOL. (C.Y.)	A (FT.)	B (FT.)	VOL. (C.Y.)	I.D. (IN.)	G (FT.)	THRUST (TONS)	A (FT.)	B (FT.)	VOL. (C.Y.)	A (FT.)	B (FT.)	VOL. (C.Y.)
4,6,8	1.0	2.6	2.0	1.5	0.2	1.0	1.5	0.1	4,6,8	1.5	3.9	2.0	2.0	0.2	1.5	1.5	0.1
10,12	1.5	5.9	2.5	2.5	0.3	2.0	1.5	0.2	10,12	2.2	8.7	3.5	2.5	0.5	2.0	2.5	0.3
16,18	2.2	13.2	3.5	4.0	0.8	2.5	3.0	0.4	16,18	3.2	19.5	4.5	4.5	1.2	3.0	3.5	0.6
20	2.4	16.3	4.5	4.0	1.0	3.0	3.0	0.5	20	3.6	24.1	5.5	4.5	1.5	3.5	3.5	0.7
24	2.9	23.4	6.0	4.0	1.4	3.5	3.5	0.7	24	4.3	34.6	8.0	4.5	2.3	4.5	4.0	1.1
30	3.6	27.5	6.5	5.0	1.9	3.5	4.0	0.9	30	5.4	40.6	8.5	5.0	3.2	5.5	4.0	1.6
36	4.4	39.5	7.0	6.0	3.4	4.5	4.5	1.6	36	6.5	58.5	10.0	6.0	5.3	6.5	4.5	2.8
42	5.1	53.8	8.0	7.0	5.1	5.5	5.0	2.5	42	7.5	79.6	11.5	7.0	8.1	8.0	5.0	4.2
48	5.8	70.3	9.0	8.0	7.4	6.0	6.0	3.7	48	8.6	104.0	13.0	8.0	11.9	9.0	6.0	6.3
54	6.5	89.0	10.0	9.0	10.3	7.0	6.5	5.3	54	9.7	131.5	15.0	9.0	17.1	10.5	6.5	8.9
60	7.3	110.0	11.0	10.0	13.9	7.5	7.5	7.3	60	10.7	162.4	16.5	10.0	23.1	11.0	7.5	12.0
66	8.0	132.9	12.5	11.0	18.9	8.5	8.0	9.6	66	11.8	196.5	18.0	11.0	30.1	12.0	8.5	16.2
72	8.7	158.2	13.5	12.0	24.0	9.0	9.0	12.3	72	12.9	233.9	19.5	12.0	38.6	14.0	8.5	20.7
78	9.4	185.6	14.5	13.0	30.0	10.0	9.5	15.6	78	13.9	274.5	21.5	13.0	49.8	14.5	9.5	25.9
84	10.1	215.3	15.5	14.0	37.1	10.5	10.5	19.5	84	15.0	318.4	23.0	14.0	61.2	15.5	10.5	32.6
90	10.9	247.1	16.5	15.0	45.0	11.5	11.0	23.9	90	16.1	365.5	24.5	15.0	74.5	17.5	10.5	39.6
96	11.6	281.2	18.0	16.0	55.5	12.5	11.5	28.9	96	17.1	415.6	26.0	16.0	89.5	18.5	11.5	48.5

	Δ = 67.50°		EARTH			ROCK				Δ = 90°		EARTH			ROCK		
I.D. (IN.)	G (FT.)	THRUST (TONS)	A (FT.)	B (FT.)	VOL. (C.Y.)	A (FT.)	B (FT.)	VOL. (C.Y.)	I.D. (IN.)	G (FT.)	THRUST (TONS)	A (FT.)	B (FT.)	VOL. (C.Y.)	A (FT.)	B (FT.)	VOL. (C.Y.)
4,6,8	2.1	5.6	3.0	2.0	0.3	2.0	1.5	0.2	4,6,8	2.7	7.1	5.0	1.5	0.4	2.0	2.0	0.2
10,12	3.1	12.6	5.5	2.5	0.8	3.5	2.0	0.4	10,12	4.0	16.0	6.5	2.5	1.0	3.5	2.5	0.5
16,18	4.7	28.3	7.5	4.0	1.9	5.5	3.0	0.9	16,18	6.0	36.0	9.0	4.0	2.4	4.5	4.0	1.0
20	5.2	34.9	9.0	4.0	2.3	5.5	3.5	1.2	20	6.6	44.4	10.0	4.5	3.1	6.0	4.0	1.5
24	6.2	50.3	11.5	4.5	3.5	6.5	4.0	1.6	24	7.9	64.0	14.5	4.5	5.0	8.0	4.0	2.1
30	7.8	58.9	12.0	5.0	4.8	7.5	4.0	2.2	30	9.9	75.0	15.0	5.0	6.7	10.0	4.0	3.3
36	9.4	84.9	14.5	6.0	8.2	9.5	4.5	3.8	36	11.9	108.0	18.0	6.0	11.4	12.0	4.5	5.3
42	10.9	115.5	17.0	7.0	12.8	11.0	5.5	6.3	42	13.9	147.0	21.0	7.0	17.8	14.0	5.5	8.7
48	12.5	150.9	19.0	8.0	18.4	13.0	6.0	9.2	48	15.9	192.0	24.0	8.0	26.2	16.0	6.0	12.4
54	14.0	191.0	21.5	9.0	26.0	15.0	6.5	12.9	54	17.9	243.0	27.0	9.0	36.9	18.0	7.0	18.1
60	15.6	235.8	24.0	10.0	35.6	16.0	7.5	17.6	60	19.9	299.8	30.0	10.0	50.3	20.0	7.5	24.0
66	17.1	285.3	26.0	11.0	46.0	18.0	8.0	23.0	66	21.8	362.8	33.0	11.0	66.2	22.0	8.5	32.5
72	18.7	339.5	28.5	12.0	57.8	19.0	9.0	28.4	72	23.8	431.8	36.0	12.0	85.6	24.0	9.0	41.0
78	20.2	398.5	31.0	13.0	75.7	21.0	9.5	37.4	78	25.7	506.7	39.0	13.0	108.2	26.0	10.0	53.2
84	21.8	462.1	33.5	14.0	94.7	22.0	10.5	46.5	84	27.7	587.7	42.0	14.0	134.4	28.0	10.5	64.8
90	23.3	530.5	35.5	15.0	114.4	24.5	11.0	58.2	90	29.0	674.6	45.0	15.0	164.9	30.0	11.5	81.2
96	24.9	603.6	38.0	16.0	138.9	25.5	12.0	70.0	96	31.6	767.5	48.0	16.0	199.0	32.0	12.0	95.1

TABLES OF DIMENSIONS AND QUANTITIES

HORIZONTAL THRUST BLOCK AT PIPE BEND — North Central Texas Council of Governments — STANDARD SPECIFICATION REFERENCE 502.4 — DATE OCT. '04 — STANDARD DRAWING NO. 4010C

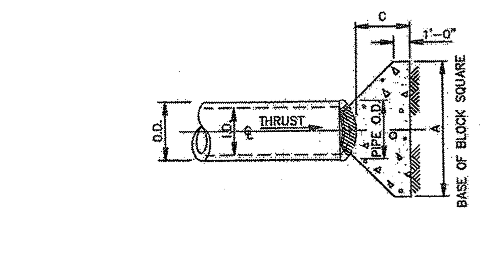

PLAN OF PLUG THRUST BLOCK
N.T.S.

REFER TO STD. DWG. No. 4040 FOR GENERAL NOTES.

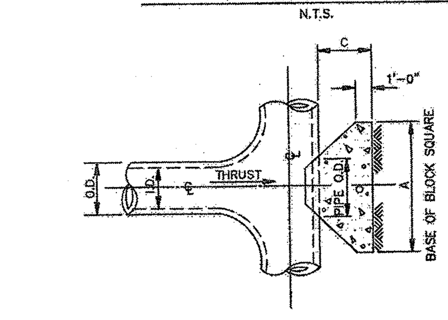

PLAN OF TEE THRUST BLOCK
N.T.S.

			EARTH		ROCK	
I.D. (IN.)	THRUST (TONS)	C (FT.)	A (FT.)	VOL. (C.Y.)	A (FT.)	VOL. (C.Y.)
4,6,8	5.1	1.5	2.5	0.3	2.0	0.2
10,12	11.3	1.5	3.5	0.6	2.5	0.3
16,18	25.5	2.0	5.5	1.6	4.0	0.9
20	31.5	2.0	6.0	1.9	4.0	0.9
24	45.2	2.5	7.0	3.1	5.0	1.7
30	53.0	3.0	7.5	4.1	5.5	2.4
36	76.3	4.0	9.0	7.3	6.5	4.2
42	104.0	4.5	10.5	11.0	7.5	6.2
48	136.0	5.0	12.0	15.6	8.5	8.7
54	172.0	5.5	13.5	21.4	9.5	11.9
60	212.0	6.0	15.0	28.4	10.5	15.7
66	257.0	6.5	16.5	36.8	11.5	20.5
72	305.0	7.5	17.5	47.2	12.5	27.2
78	358.0	8.0	19.0	58.9	13.5	33.7
84	416.0	8.5	20.5	72.3	14.5	41.2
90	477.0	9.0	22.0	87.7	15.5	49.7
96	543.0	9.5	23.5	104.8	16.5	61.0

HORIZONTAL THRUST BLOCK AT TEES AND PLUGS — North Central Texas Council of Governments — STANDARD SPECIFICATION REFERENCE 502.4 — DATE OCT. '04 — STANDARD DRAWING NO. 4020

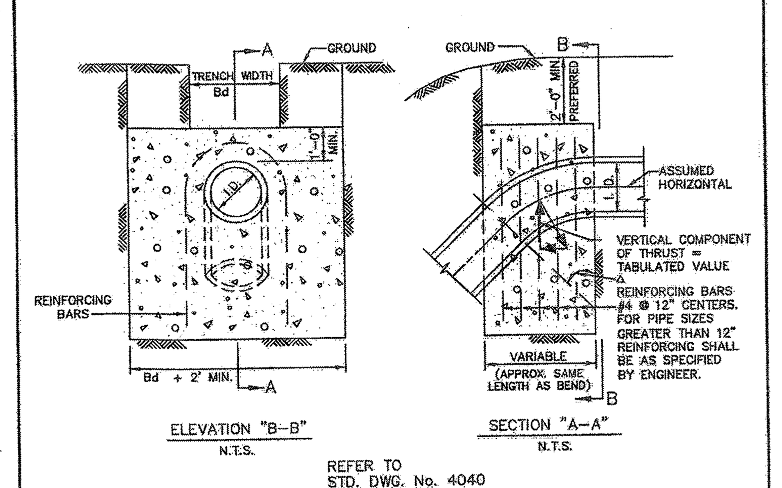

REFER TO STD. DWG. No. 4040 FOR GENERAL NOTES.

Δ →	11.25°		22.50°		30°		45°		67.50°		90°		← Δ
I.D. (IN.)	THRUST (TONS)	VOL. (C.Y.)	THRUST (TONS)	VOL. (C.Y.)	THRUST (TONS)	VOL. (C.Y.)	THRUST (TONS)	VOL. (C.Y.)	THRUST (TONS)	VOL. (C.Y.)	THRUST (TONS)	VOL. (C.Y.)	I.D. (IN.)
4,6,8	1.0	0.5	2.0	1.0	2.5	1.3	3.6	1.8	4.8	2.3	5.0	2.5	4,6,8
10,12	2.2	1.1	4.3	2.2	5.7	2.8	8.0	4.0	10.5	5.2	11.3	5.7	10,12
16,18	5.0	2.5	9.7	4.9	12.7	6.4	18.0	9.0	23.5	11.8	25.5	12.7	16,18
20	6.1	3.1	12.0	6.0	15.7	7.9	22.2	11.1	29.2	14.5	31.4	15.7	20
24	8.2	4.4	17.3	8.7	22.6	11.3	32.0	16.0	41.8	20.9	45.2	22.6	24
30	10.5	5.2	20.3	10.1	26.5	13.3	37.5	18.8	49.0	24.5	53.1	26.5	30
36	14.9	7.5	29.2	14.6	38.2	19.1	54.0	27.0	70.5	35.3	76.4	38.2	36
42	20.3	10.1	39.8	19.9	52.0	26.0	73.5	36.7	96.0	48.0	104.0	52.0	42
48	26.5	13.2	51.9	26.0	67.9	33.9	96.0	48.0	126.0	62.7	136.0	67.9	48
54	33.5	16.8	65.7	32.9	85.9	42.9	122.0	60.7	159.0	79.4	172.0	85.9	54
60	41.4	20.7	81.2	40.6	106.0	53.0	150.0	75.0	196.0	98.0	212.0	106.0	60
66	50.1	25.0	98.2	49.1	128.0	64.2	182.0	90.7	237.0	119.0	257.0	128.0	66
72	59.6	29.8	117.0	58.4	153.0	76.3	216.0	108.0	282.0	141.0	305.0	153.0	72
78	69.9	35.0	137.0	68.6	179.0	90.0	254.0	127.0	331.0	166.0	358.0	179.0	78
84	81.1	40.5	159.0	79.5	208.0	104.0	294.0	147.0	384.0	192.0	416.0	208.0	84
90	93.1	46.5	183.0	91.3	239.0	119.0	337.0	169.0	441.0	221.0	477.0	239.0	90
96	106.0	53.0	208.0	104.0	272.0	136.0	384.0	192.0	502.0	251.0	543.0	272.0	96

VERTICAL THRUST BLOCK AT PIPE BEND — North Central Texas Council of Governments — STANDARD SPECIFICATION REFERENCE 502.4 — DATE OCT. '04 — STANDARD DRAWING NO. 4030

GENERAL NOTES FOR ALL THRUST BLOCKS:

1. CONCRETE FOR BLOCKING SHALL BE CLASS "B".
2. ALL CALCULATIONS ARE BASED ON INTERNAL PRESSURE OF 200 PSI FOR DUCTILE IRON, P.V.C., AND 150 PSI FOR CONCRETE PIPE.
3. VOLUMES OF THRUST BLOCKS ARE NET VOLUMES OF CONCRETE TO BE FURNISHED. THE CORRESPONDING WEIGHT OF THE CONCRETE (CLASS "B") IS EQUAL TO OR GREATER THAN THE VERTICAL COMPONENT OF THE THRUST ON THE VERTICAL BEND.
4. WALL THICKNESS (T) ASSUMED HERE FOR ESTIMATING PURPOSES ONLY.
5. POUR CONCRETE FOR BLOCK AGAINST UNDISTURBED EARTH.
6. DIMENSIONS MAY BE VARIED AS REQUIRED BY FIELD CONDITIONS WHERE AND AS DIRECTED BY THE ENGINEER. THE VOLUME OF CONCRETE BLOCKING SHALL NOT BE LESS THAN SHOWN HERE.
7. THE SOIL BEARING PRESSURES ARE BASED ON 1000 LBS./S.F. IN SOIL AND 2000 LBS./S.F. IN ROCK.
8. USE POLYETHYLENE WRAP OR EQUAL BETWEEN CONCRETE AND BEND, TEE, OR PLUG TO PREVENT THE CONCRETE FROM STICKING TO IT.
9. CONCRETE SHALL NOT EXTEND BEYOND JOINTS.

THRUST BLOCK GENERAL NOTES — North Central Texas Council of Governments — STANDARD SPECIFICATION REFERENCE 502.4 — DATE OCT. '04 — STANDARD DRAWING NO. 4040

NOTE:
IN UNPAVED AREAS, INSTALL 2' x 2' x 6" CONCRETE VALVE PAD FLUSH WITH THE TOP OF VALVE BOX. REINFORCE WITH #3 BARS ON 6" CENTERS BOTH WAYS.

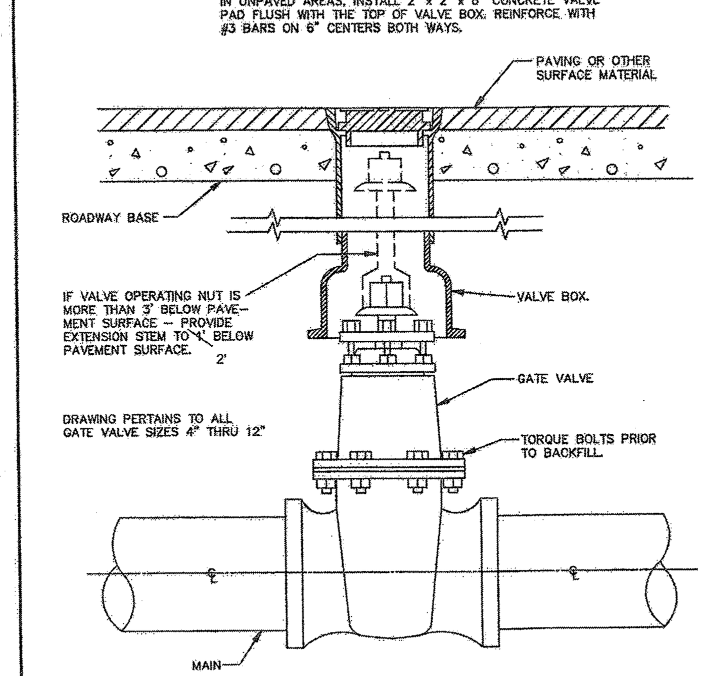

GATE VALVE BOX AND EXTENSION STEM
N.T.S.

GATE VALVE 4" TO 12" BOX & EXTENSION STEM — North Central Texas Council of Governments — STANDARD SPECIFICATION REFERENCE 502.6 — DATE OCT. '04 — STANDARD DRAWING NO. 4050

City of Rockwall

CLASS CONCRETE	BAGS CEMENT PER C.Y.	MIN. STRENGTH 28 - DAY PSI
A	5.5	3000
B	4	2000

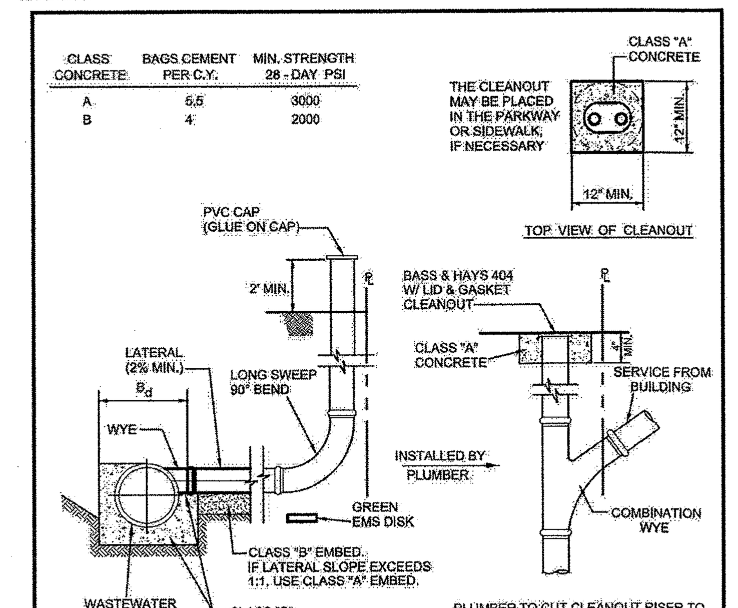

PLUMBER TO CUT CLEANOUT RISER TO INSTALL COMBINATION WYE TO CORRESPOND W/ GRADE OF THE PIPE LEADING FROM BUILDING. AFTER INSTALLATION OF THE WYE, INSERT CLEANOUT INTO THE TOP OF THE RISOR.

WASTEWATER LATERAL CONNECTIONS – RESIDENTIAL — CITY OF ROCKWALL — DATE AUG. '15 — DRAWING NO. R-5120

Page 228

NOTE: NCTCOG DETAILS SHOWN HEREON HAVE BEEN MODIFIED TO INCLUDE THE "CITY OF ROCKWALL UPDATES" AS PUBLISHED IN THE CITY OF ROCKWALL'S UNIFIED DEVELOPMENT CODE. REFER TO THE CITY DOCUMENT FOR EXACT DESCRIPTIONS OF THE UPDATES.

RECORD DRAWINGS

To the best of our knowledge Engineering Concepts & Design, L.P., hereby states that this plan is As-Built. This information provided is based on surveying at the site and information provided by the contractor.

TODD WINTTERS — DATE 6-13-19

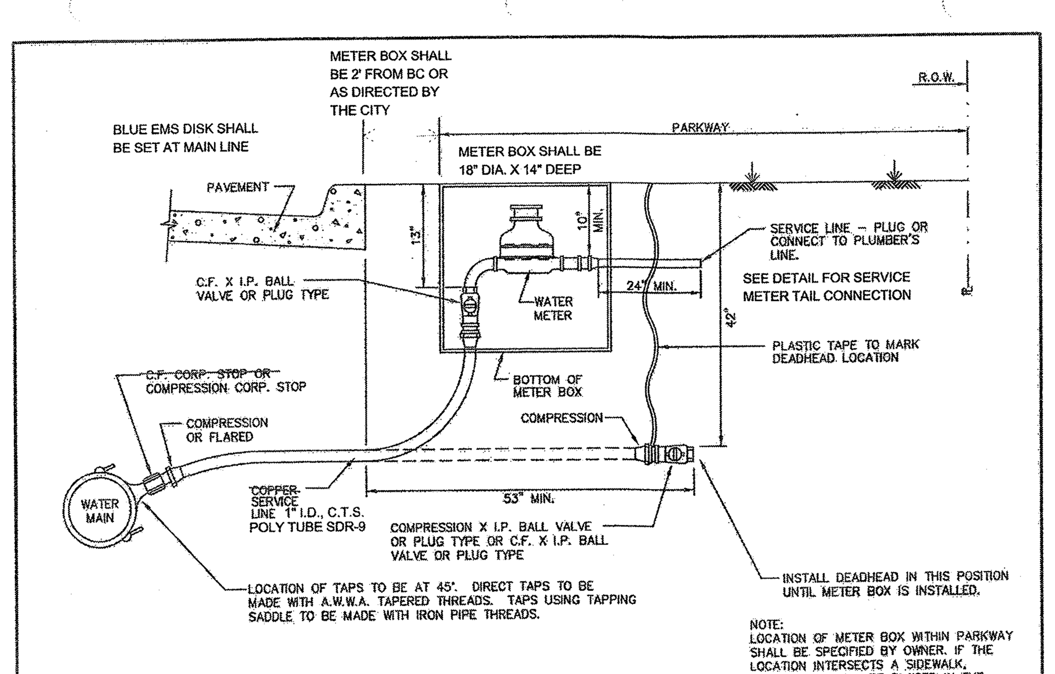

NOTE:
LOCATION OF METER BOX WITHIN PARKWAY SHALL BE SPECIFIED BY OWNER. IF THE LOCATION INTERSECTS A SIDEWALK, METER BOX SHALL BE PLACED IN THE CENTER OF SIDEWALK.

WATER SERVICE INSTALLATION 3/4" OR 1" LINE — North Central Texas Council of Governments — STANDARD SPECIFICATION REFERENCE 502.10 — DATE OCT. '04 — STANDARD DRAWING NO. 4130

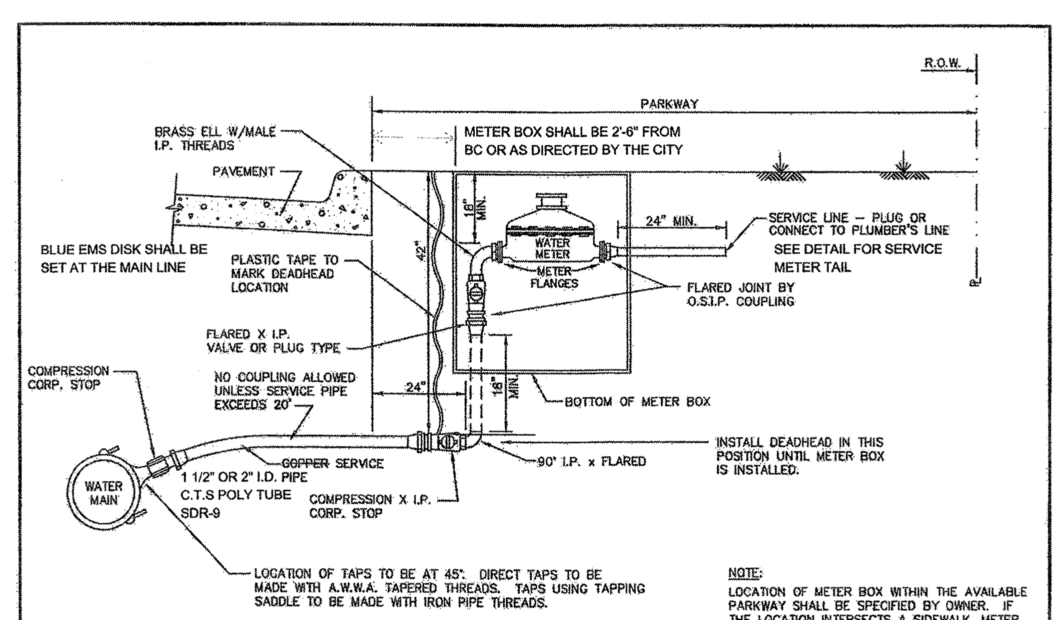

NOTE:
LOCATION OF METER BOX WITHIN THE AVAILABLE PARKWAY SHALL BE SPECIFIED BY OWNER. IF THE LOCATION INTERSECTS A SIDEWALK, METER BOX SHALL BE PLACED IN CENTER OF SIDEWALK.

WATER SERVICE INSTALLATION 1 1/2" OR 2" LINE — North Central Texas Council of Governments — STANDARD SPECIFICATION REFERENCE 502.10 — DATE OCT. '04 — STANDARD DRAWING NO. 4140

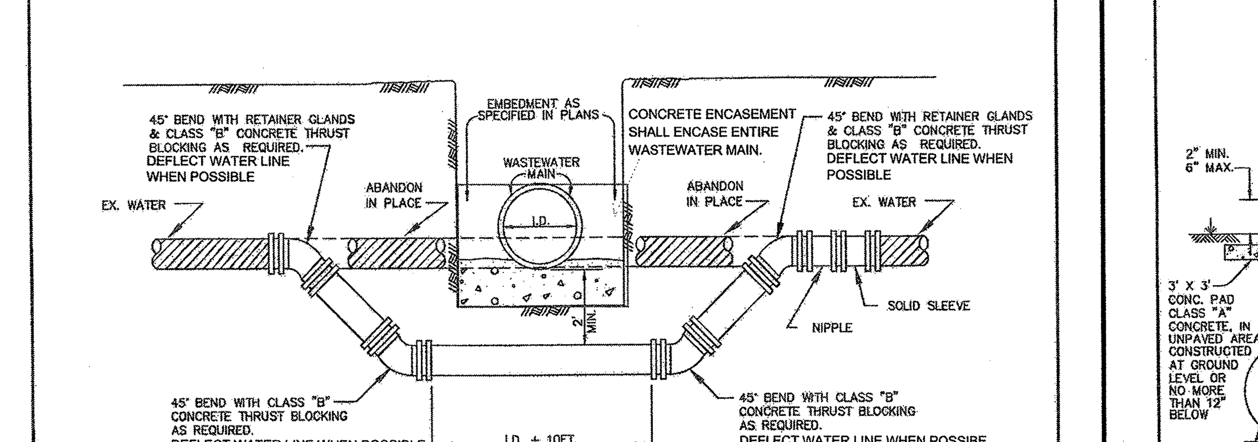

WATER MAIN LOWERING BELOW WASTEWATER MAIN — North Central Texas Council of Governments — STANDARD SPECIFICATION REFERENCE 506.6 — DATE OCT. '04 — STANDARD DRAWING NO. 4200

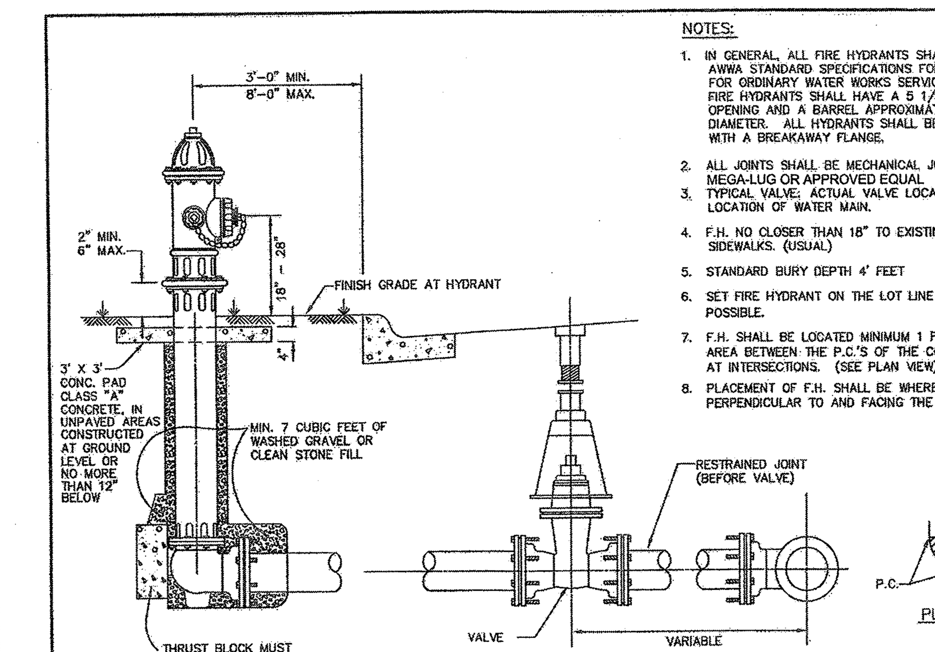

NOTES:

1. IN GENERAL, ALL FIRE HYDRANTS SHALL CONFORM TO AWWA STANDARD SPECIFICATIONS FOR FIRE HYDRANTS FOR ORDINARY WATER WORKS SERVICE, C-502. FIRE HYDRANTS SHALL HAVE A 5 1/4" MIN. VALVE OPENING AND A BARREL APPROXIMATELY 7" INSIDE DIAMETER. ALL HYDRANTS SHALL BE EQUIPPED WITH A BREAKAWAY FLANGE.
2. ALL JOINTS SHALL BE MECHANICAL JOINTS. RESTRAINED, MEGA-LUG OR APPROVED EQUAL
3. TYPICAL VALVE; ACTUAL VALVE LOCATION WILL DEPEND ON LOCATION OF WATER MAIN.
4. F.H. NO CLOSER THAN 18" TO EXISTING OR PROPOSED SIDEWALKS. (USUAL)
5. STANDARD BURY DEPTH 4' FEET
6. SET FIRE HYDRANT ON THE LOT LINE EXTENDED WHEN POSSIBLE.
7. F.H. SHALL BE LOCATED MINIMUM 1 FT. OUTSIDE OF THE AREA BETWEEN THE P.C.'S OF THE CORNER TURNING RADII AT INTERSECTIONS. (SEE PLAN VIEW)
8. PLACEMENT OF F.H. SHALL BE WHERE PUMPER NOZZLE IS PERPENDICULAR TO AND FACING THE NEAREST CURB.

FIRE HYDRANT INSTALLATION — North Central Texas Council of Governments — STANDARD SPECIFICATION REFERENCE 502.3 — DATE OCT. '04 — STANDARD DRAWING NO. 4120

"Case No. SP2017-041"

BENCHMARK:
"X" CUT IN CURB 23'± SOUTH OF EAST DRIVE APPROACH OF EXISTING RAYBURN COUNTRY ELECTRIC BUILDING.

ENGINEERINGCONCEPTS & DESIGN, L.P.
ENGINEERING / PROJECT MANAGEMENT / CONSTRUCTION SERVICES - FIRM REG. #F-001145
201 WINDCO CIR, STE 200, WYLIE, TX 75098
972-941-8400 FAX: 972-941-8401 WWW.ECDLP.COM

REVISIONS:

DRAWN: TONY	DATE: APRIL 13, 2018
CHECKED: TW	DATE: APRIL 13, 2018
PROJECT NO.: 3560	
DWG FILE NAME:	

THIS DOCUMENT IS RELEASED FOR THE PURPOSE OF CONSTRUCTION.

STATE OF TEXAS — TODD D. WINTTERS — 87085 — REGISTERED PROFESSIONAL ENGINEER — 4-13-18

WATER DETAILS
RAYBURN ELECTRIC COOP. PHASE 2
LOT 5, BLK 1 RAYBURN COUNTRY ADDITION
CITY OF ROCKWALL, ROCKWALL COUNTY, TEXAS

SHEET 17 OF 20