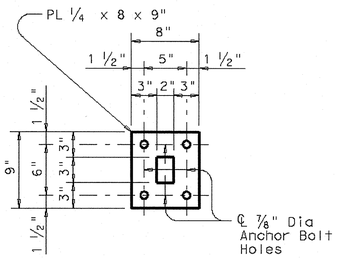

BOTTOM ANCHORAGE PLATE

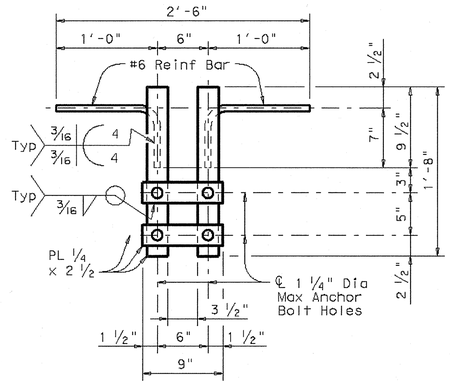

TOP ANCHORAGE PLATE

Showing top plan view

T101 RAIL ANCHOR PLATE DETAILS (6)

(1) "T" is equal to the culvert top slab thickness. For Precast Boxes with slabs less than 7", see SCP-MD Standard for additional details.

(5) Bars C (#5), as identified on the PARALLEL WINGS PW standard sheet, shall extend 1'-6" into the Anchorage Curb similar to that shown for a normal culvert curb.

(6) Anchor Plates shown replace anchor plates shown on the T101 standard. Install one anchorage plate assembly at each rail post. Do not galvanize or oil top anchorage plate or bottom anchorage plate.

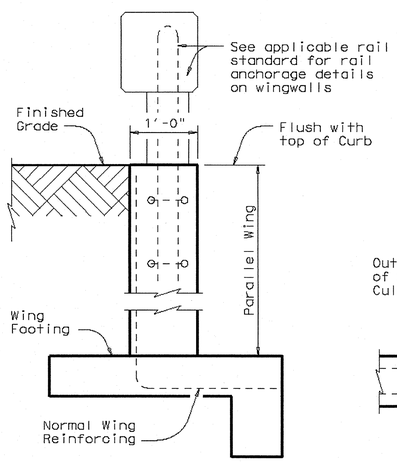

SECTION C-C

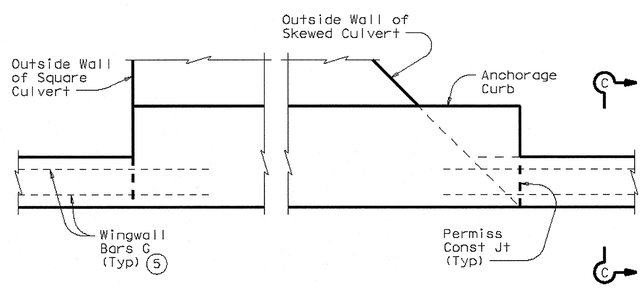

TYPICAL CURB PLAN

Curb reinforcing and footings not shown for clarity

INSTALLATION AT PARALLEL CULVERT WINGWALLS

See culvert wingwall standard for bars and details not shown.

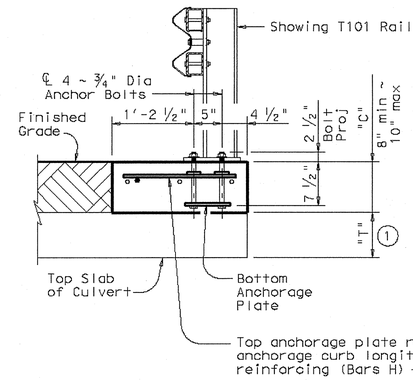

TYPICAL SECTION THRU CURBS 10" OR LESS

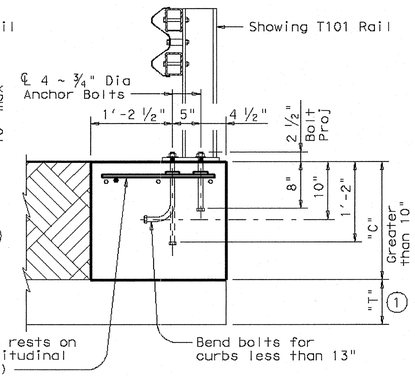

TYPICAL SECTION THRU CURBS GREATER THAN 10"

Reinforcing not shown for clarity

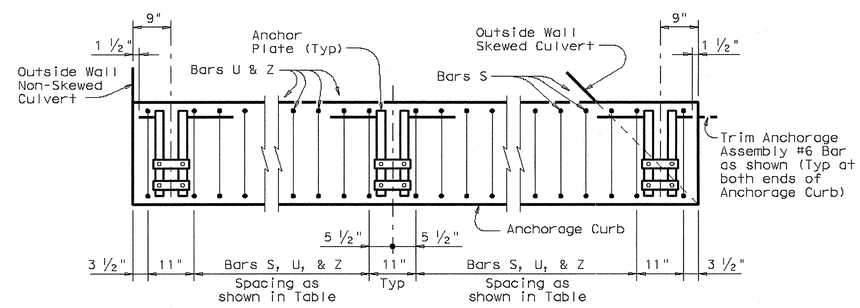

ANCHOR PLATE INSTALLATION PLAN

Also showing placement of bars S, U, and Z in Anchorage Curb
Bar spacing shown is valid for all skews.

T101 RAIL ANCHORAGE DETAILS

SHEET 2 OF 2

Texas Department of Transportation
Bridge Division

RAIL ANCHORAGE CURB
BOX CULVERT
RAIL MOUNTING DETAILS
(CURBS 8" TO 5'-0" TALL ONLY)

RAC

FILE: racste01.dgn	DN: GAF	CK: TxDOT	DW: TxDOT	CK: GAF	
© TxDOT May 2005	DISTRICT	FEDERAL AID PROJECT			SHEET
REVISIONS		COUNTY	CONTROL	SECT	JOB	HIGHWAY

RECORD DRAWING
THIS RECORD DRAWING HEREIN REFLECTS TO THE BEST OF THE DESIGN ENGINEER'S KNOWLEDGE, THE APPROXIMATE LOCATION OF THE CONSTRUCTED WORK, USING INFORMATION AS PROVIDED BY THE CONTRACTORS AND SURVEYED GRADES.

Kimley-Horn and Associates, Inc.
Tel. No. (972) 335-3580
Fax No. (972) 335-3779
5750 Genesis Court, Suite 200
Frisco, Texas 75034

STATE OF TEXAS
PIETER D. KESSELS
87775
LICENSED PROFESSIONAL ENGINEER
02-27-2008

Pecan Valley Drive and Quail Run Road
City of Rockwall, Texas

TxDOT RAIL ANCHORAGE CURB BOX CULVERT RAIL MOUNTING DETAILS RAC

Scale:	Not To Scale
Designed by:	TxDOT
Drawn by:	TxDOT
Checked by:	P.D.K.
Date:	Feb. 27, 2008
Project No.	068237002

SHEET C-20 OF 47

DISCLAIMER:
The use of this standard is governed by the "Texas Engineering Practice Act". No warranty of any kind is made by TxDOT for any purpose whatsoever. TxDOT assumes no responsibility for the conversion of this standard to other formats or for incorrect results or damages resulting from its use.

LEVELS DISPLAYED
ACC:

IMAGES: rwsstd_PW_2
XREFS: rac_base_PD
PLOTTED BY: DONALDSON, JUSTIN 2/25/2008 5:47 PM
WORKSPACE: C:\Documents and Settings\JUSTIN.DONALDSON\Local Settings\Temp\AcPublish_3320\TxDOT7.2_BAC.dwg
LAST SAVED: 10/29/2007 2:22 PM