TABLE OF DIMENSIONS & REINFORCING STEEL
(Wings for One Structure End)

Dimensions					Variable Reinforcing				Estimated Quantities (3) per ft of wing length (2-Wings)	
					Bars J1		Bars J2			
Maximum Wingwall Height Hw	W	X	Y	Z	Size	Spa	Size	Spa	Reinf (Lb/Ft)	Conc (CY/Ft)
2'-6"	2'- 5"	1'- 0"	9"	7"	#4	1'-0"	#4	1'-0"	33.73	0.248
3'-0"	2'- 5"	1'- 0"	9"	7"	#4	1'-0"	#4	1'-0"	37.07	0.261
3'-6"	2'- 5"	1'- 0"	9"	7"	#4	1'-0"	#4	1'-0"	37.74	0.273
4'-0"	2'- 5"	1'- 0"	9"	7"	#4	1'-0"	#4	1'-0"	38.41	0.285
4'-6"	3'- 2"	1'- 6"	1'- 0"	7"	#4	1'-0"	#4	1'-0"	41.75	0.330
5'-0"	3'- 2"	1'- 6"	1'- 0"	7"	#4	1'-0"	#4	1'-0"	45.09	0.343
5'-6"	3'- 2"	1'- 6"	1'- 0"	7"	#4	1'-0"	#4	1'-0"	45.75	0.355
6'-0"	3'- 2"	1'- 6"	1'- 0"	7"	#4	1'-0"	#4	1'-0"	46.42	0.367
7'-0"	3'- 8"	1'- 9"	1'- 3"	7"	#4	1'-0"	#4	1'-0"	52.77	0.414
8'-0"	4'- 2"	2'- 0"	1'- 6"	8"	#5	1'-0"	#4	1'-0"	60.19	0.486
9'-0"	4'- 8"	2'- 3"	1'- 9"	8"	#4	6"	#4	6"	81.49	0.535
10'-0"	5'- 2"	2'- 6"	2'- 0"	8"	#5	6"	#4	6"	97.25	0.584
11'-0"	5'- 8"	2'- 9"	2'- 3"	8"	#6	6"	#5	6"	133.65	0.634
12'-0"	6'- 2"	3'- 0"	2'- 6"	9"	#7	6"	#5	6"	162.29	0.721
13'-0"	6'- 8"	3'- 3"	2'- 9"	11"	#7	6"	#5	6"	178.80	0.856
14'-0"	7'- 2"	3'- 6"	3'- 0"	1'- 0"	#8	6"	#5	6"	216.78	0.959
15'-0"	7'- 8"	4'- 0"	3'- 0"	1'- 1"	#9	6"	#6	6"	283.06	1.068
16'-0"	8'- 2"	4'- 6"	3'- 0"	1'- 3"	#9	6"	#6	6"	297.02	1.234

TABLE OF WINGWALL REINFORCING (2-Wings)

Bar	Size	No.	Spa
DL	#5	~	1'-0"
DS	#5	~	1'-0"
E	#4	~	1'-0"
F	#4	~	1'-0"
G	#6	4	~
M	#4	4	~
P	#4	~	1'-0"
RS	#5	3	~
RL	#5	3	~
V	#4	~	1'-0"

TABLE OF ESTIMATED CULVERT TOEWALL QUANTITIES

Bar	Size	No.	Spa
L	#4	~	1'-6"
Q	#4	1	~
Reinf (Lb/Ft)			2.45
Conc (CY/Ft)			0.037

WING DIMENSION CALCULATIONS:

Formulas: (All values are in Feet)

Hw = H + T + C − 0.250'

A = (Hw − 0.333') (SL)

B = (A) [Tangent (θ + 15°)]

Lw = (A) ÷ [Cosine (θ + 15°)]

For Cast-in-place culverts:

Ltw = [(N) (S) + (N+1) (U)] ÷ (Cosine θ)

For Precast culverts:

Ltw = [(N) (2U+S) + (N−1) (0.500')] ÷ (Cosine θ)

Total Wingwall Area (Two Wings ~ S.F.) = (0.5) (Hw + 0.333') (Lw + A)

Hw = Height of Wingwall
SL:1 = Side Slope Ratio (Horizontal:1 Vertical)
A = Length of Short Wingwall
Lw = Length of Long Wingwall
Ltw = Culvert Toewall Length
N = Number of Culvert Spans
θ = Culvert Skew

See applicable box culvert standard for H, S, T, and U values.

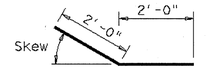

BARS DS
(Short Wing)

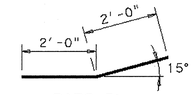

BARS DL
(Long Wing)

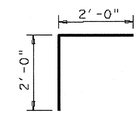

BARS RS
(Short Wing)

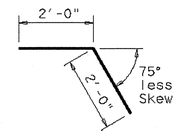

BARS RL
(Long Wing)

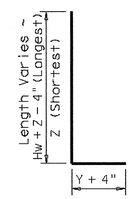

BARS J1

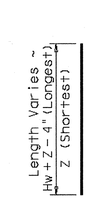

BARS V

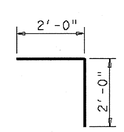

BARS L

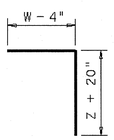

BARS J2

1. Extend Bars P 3'-0" minimum into bottom slab of Box Culvert.
2. Adjust to fit as necessary to maintain 1 1/4" clear cover and 4" minimum between bars.
3. Quantities shown are based on an average wing height for two wings (one structure end). To determine total quantities for two wings multiply the tabulated values by 0.5 x (A+Lw).
4. Recommended values of Slope are: 2:1, 3:1, 4:1, & 6:1.
5. When shown elsewhere on the plans, a 5" deep concrete riprap shall be constructed. Unless otherwise shown on the plans or directed by the Engineer, the riprap shall have a 6" wide by 1'-6" deep reinforced concrete toewall along all edges adjacent to natural ground; the toewall shall be reinforced by extending typical riprap reinforcing into the toewall; construction joints or grooved joints, oriented in the direction of flow, shall extend across the full distance of the riprap, at intervals of approximately 20'. When such riprap is provided, the culvert toewall shown in SECTION B-B will not be required. Payment for riprap shall be as required by Item 432, "Riprap".
6. At Contractor's option, Culvert Toewall may be ended flush with Wingwall Toewall. Adjust reinforcing from that shown as necessary.
7. Applicable values of of Skew are: 15°, 30°, and 45°.
8. Typical wingwall angle for all skews.
9. 0" min to 5'-0" max. For T6 or C6 Rail, see T6-CM standard for additional details. For all other rail types, refer to the RAC standard. For curbs without rail and greater than 1'-0" high, see ECD standard for additional details. Estimated curb heights are shown elsewhere in the plans.
10. For vehicle safety, curb heights and wall heights shall be reduced, if necessary, to provide a maximum 3" projection above finished grade. No changes will be made in quantities and no additional compensation will be allowed for this work.

GENERAL NOTES:

Designed according to current AASHTO Standard and Interim Specifications.

All reinforcing steel shall be Grade 60.

All concrete shall be Class "C" and shall have a minimum compressive strength of ~~3600~~ psi. 4,200

All reinforcing bars shall be adjusted to provide a minimum of 1 1/4" clear cover.

When structure is founded on solid rock, depth of toewalls for culverts and wingwalls may be reduced or eliminated as directed by the Engineer.

See BCS sheet for additional dimensions and information.

The quantities for concrete and reinforcing steel resulting from the formulas given on this sheet are for Contractor's information only.

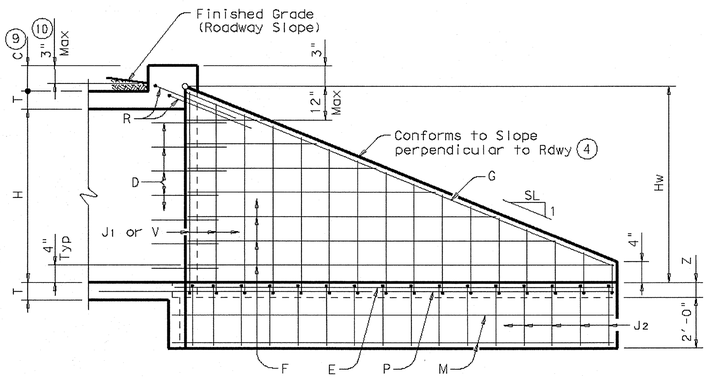

INSIDE ELEVATION
(Showing reinforcing. Culvert and Culvert Toewall reinforcing not shown for clarity.)

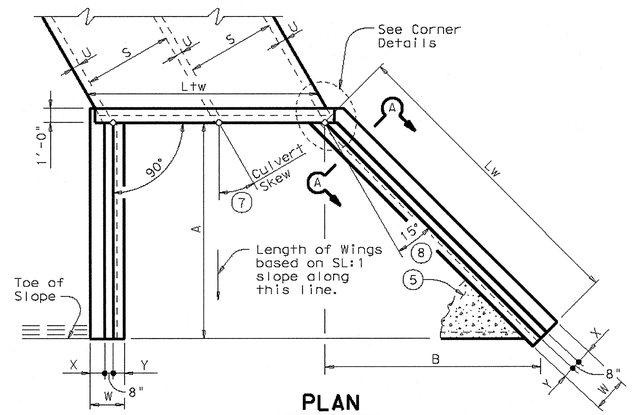

PLAN
(Showing dimensions and 30° Skew.)

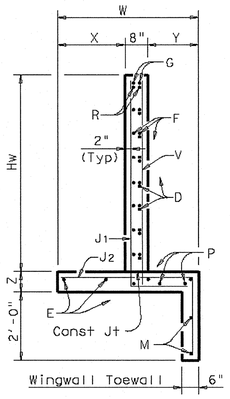

SECTION A-A

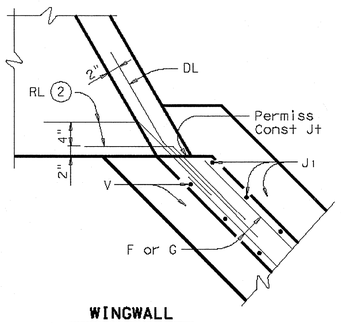

WINGWALL

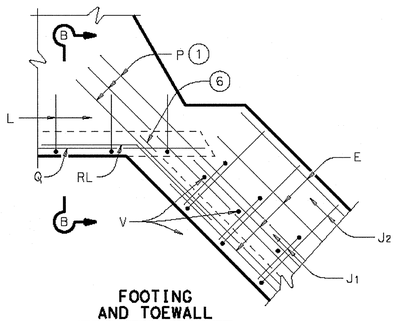

FOOTING AND TOEWALL

CORNER DETAILS
(Culvert and Culvert Toewall reinforcing not shown for clarity.)

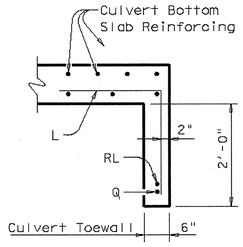

SECTION B-B (5)

DISCLAIMER:
The use of this standard is governed by the "Texas Engineering Practice Act". No warranty of any kind is made by TxDOT for any purpose whatsoever. TxDOT assumes no responsibility for the conversion of this standard to other formats or for incorrect results or damages resulting from its use.

COMMENTS:

LEVELS DISPLAYED

Texas Department of Transportation
Bridge Division

CONCRETE WINGWALLS WITH FLARED WINGS FOR SKEWED BOX CULVERTS

FW-S

FILE: fw-sstde.dgn	DN: GAF	CK: CAT	DW: TxDOT	CK: GAF
© TxDOT May 2005	DISTRICT	FEDERAL AID PROJECT		SHEET
REVISIONS				
	COUNTY	CONTROL	SECT	JOB	HIGHWAY

RECORD DRAWING
THIS RECORD DRAWING HEREIN REFLECTS TO THE BEST OF THE DESIGN ENGINEER'S KNOWLEDGE, THE APPROXIMATE LOCATION OF THE CONSTRUCTED WORK, USING INFORMATION AS PROVIDED BY THE CONTRACTORS AND SURVEYED GRADES.

Kimley-Horn and Associates, Inc.
Tel. No. (972) 335-3580
Fax No. (972) 335-3779
5750 Genesis Court, Suite 200
Frisco, Texas 75034

STATE OF TEXAS
PIETER D. KESSELS
87775
LICENSED PROFESSIONAL ENGINEER
02-27-2008

Pecan Valley Drive and Quail Run Road
City of Rockwall, Texas

TxDOT CONCRETE WINGWALLS WITH FLARED WINGS FOR SKEWED BOX CULVERTS FW-S

Scale:	Not To Scale
Designed by:	TxDOT
Drawn by:	TxDOT
Checked by:	P.D.K.
Date:	Feb. 27, 2008
Project No.	068237002

IMAGES:
USER: donaldson
PLOTTED BY: DONALDSON, JUSTIN 2/25/2008 5:47 PM
DGN FILE: C:\PROJECTS\PECAN VALLEY DRIVE\STRUCTR\TXDOT\FW-S.DWG
LAST SAVED: 10/2008 2:24 PM