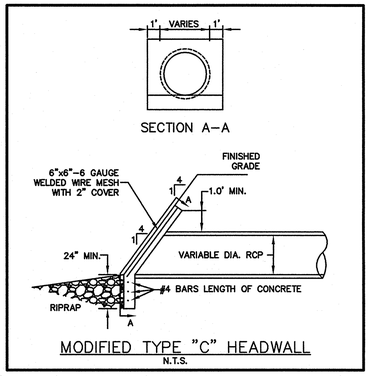

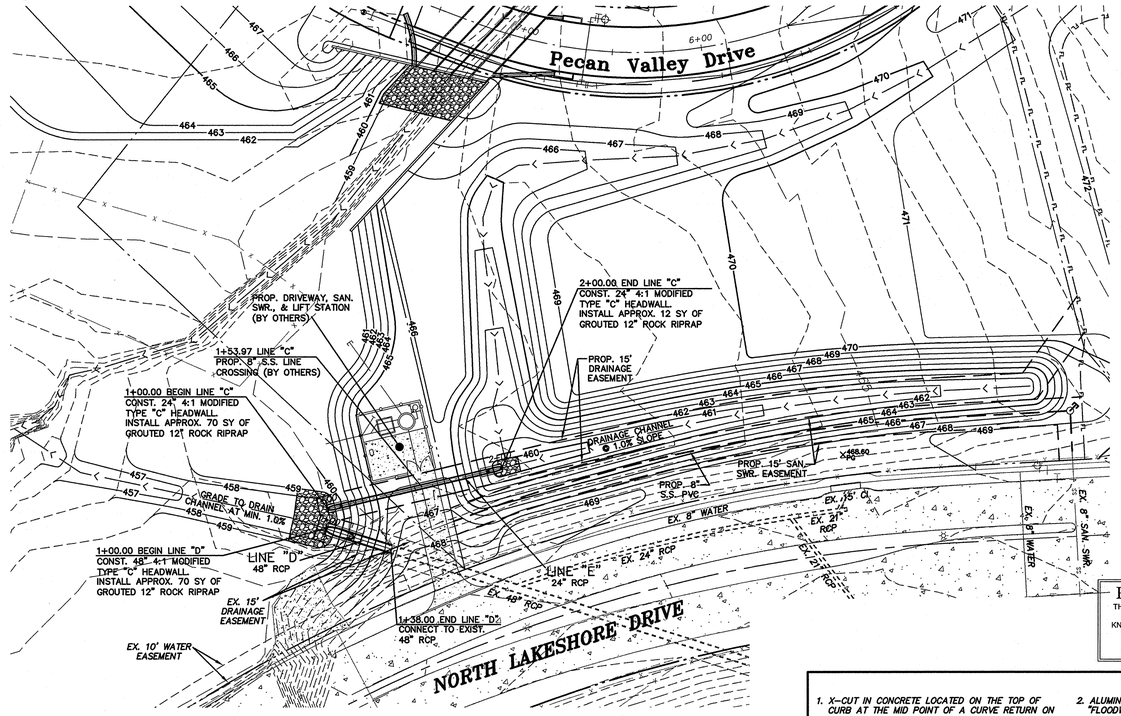

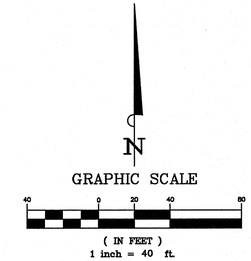

!! WARNING !!

EXISTING UTILITIES IN THE AREA. CONTRACTOR SHALL FIELD VERIFY THE LOCATION OF ALL EXISTING UTILITIES WITH THE PROVIDER PRIOR TO START OF CONSTRUCTION AND SHALL IMMEDIATELY NOTIFY THE ENGINEER OF ANY CONFLICTS DISCOVERED. CONTRACTOR IS RESPONSIBLE FOR COORDINATING UTILITY RELOCATION WHERE NECESSARY AND PROTECTING EXISTING UTILITIES (SHOWN OR NOT SHOWN). IF ANY EXISTING UTILITIES ARE DAMAGED, THE CONTRACTOR SHALL REPLACE THEM AT THEIR OWN EXPENSE.

STOP!

CALL BEFORE YOU DIG

TEXAS ONE CALL SYSTEM

1-800-245-4545

(@ least 48 hours prior to digging)

RECORD DRAWING

THIS RECORD DRAWING HEREIN REFLECTS TO THE BEST OF THE DESIGN ENGINEER'S KNOWLEDGE, THE APPROXIMATE LOCATION OF THE CONSTRUCTED WORK, USING INFORMATION AS PROVIDED BY THE CONTRACTORS AND SURVEYED GRADES.

BENCHMARKS

1. *X–CUT IN CONCRETE LOCATED ON THE TOP OF CURB AT THE MID POINT OF A CURVE RETURN ON THE NORTH SIDE OF N. LAKESHORE DRIVE AT THE INTERSECTION WITH S.H. 205, 5' SOUTHEAST OF A POWER POLE. ELEVATION: 477.90'*
2. *ALUMINUM CAP FOUND IN CONCRETE LABELED, "FLOODWAY BOUNDARY" LOCATED ON THE SOUTHEAST SIDE OF N. LAKESHORE DRIVE, 72' SOUTHWEST FROM A PEDESTRIAN COLUMN ON SOUTHEAST END OF A BRIDGE, 23' EAST OF BACK OF CURB. ELEVATION: 470.06'*
3. *X–CUT IN CONCRETE LOCATED AT THE INTERSECTION OF THE EAST R.O.W. LINE OF RANDOM OAKS DRIVE AND THE NORTH R.O.W. LINE OF QUAIL RUN ROAD, 53' NORTHEAST OF A POWER POLE ON THE SOUTH SIDE OF QUAIL RUN ROAD. ELEVATION: 471.31'*

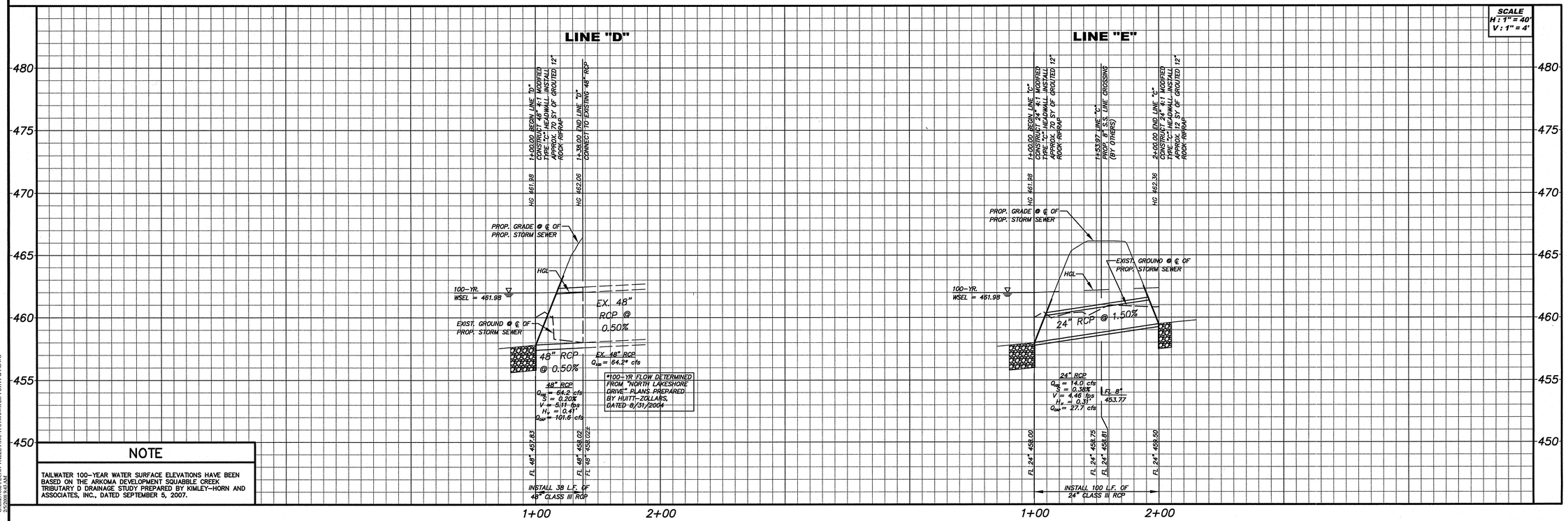

NOTE

TAILWATER 100–YEAR WATER SURFACE ELEVATIONS HAVE BEEN BASED ON THE ARKOMA DEVELOPMENT SQUABBLE CREEK TRIBUTARY D DRAINAGE STUDY PREPARED BY KIMLEY–HORN AND ASSOCIATES, INC., DATED SEPTEMBER 5, 2007.

No.	Date	Revisions	App.

Kimley-Horn and Associates, Inc.
Tel. No. (972) 335–3580
Fax No. (972) 335–3779
5750 Genesis Court, Suite 200
Frisco, Texas 75034

STATE OF TEXAS
PIETER D. KESSELS
87775
LICENSED PROFESSIONAL ENGINEER
02-27-2008

Pecan Valley Drive and Quail Run Road

City of Rockwall, Texas

STORM SEWER LINE "D" AND "E" PLAN AND PROFILE

Scale:	AS NOTED
Designed by:	T.B.B.
Drawn by:	J.J.D./B.B.P.
Checked by:	P.D.K.
Date:	Feb. 27, 2008
Project No.	068237002

SHEET C-13 OF 47

XREF X:\Arks.W-PVD - XREF XROW-PVD - XREF XTopo-PVD - XREF XAs Built-PVD - XREF XEs Utility-PVD - XREF XEs Sewer-PVD - XREF XBoul-PVD - XREF XSewPr-PVD - XREF XGrading-PVD - XREF XSewer Profiles-PVD - XREF XGrid-PVD - XREF XSite LB Station-PVD - XREF XEsmt-PVD - XREF XEs Profiles-PVD - XREF XEsmt Profiles-PVD - XREF XEsmt Profile-E-PVD
IMAGES:
NONE
PLOTTED BY: DONALDSON, JUSTIN 2/25/2008 5:48 PM
PLOT NAME: C-13 PECAN VALLEY INC-11.STM 1:1 PSB LIFT STA-P & P.DWG
PLOT SCALE: 2/25/2008 9:43 AM
LAST SAVED: