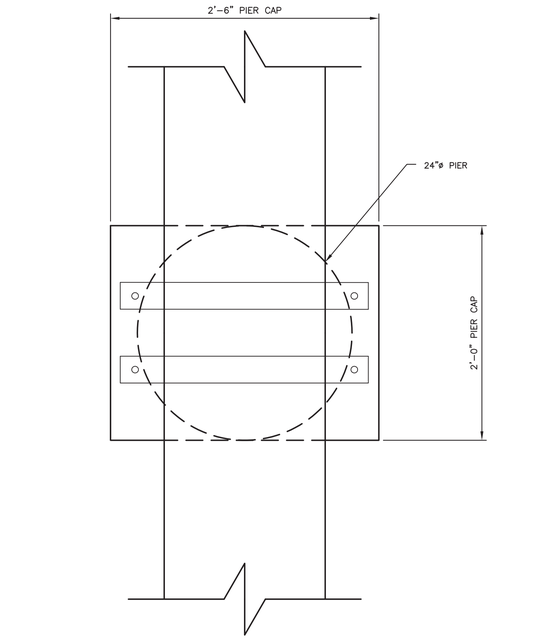

3 S2 AERIAL CROSSING DETAIL SCALE = 1'-0"

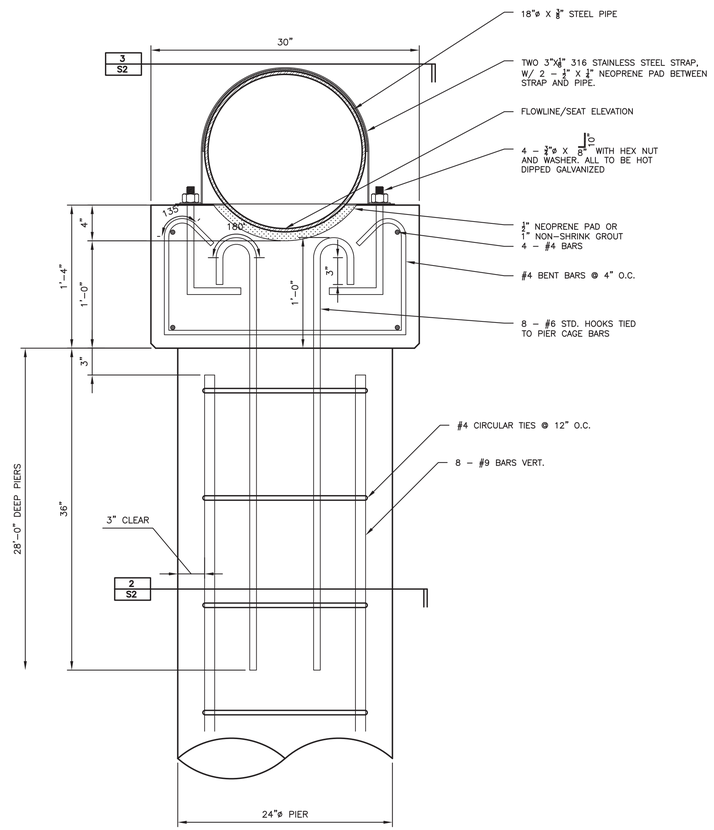

1 S2 AERIAL CROSSING PIER CAP DETAIL SCALE = 1'-0"

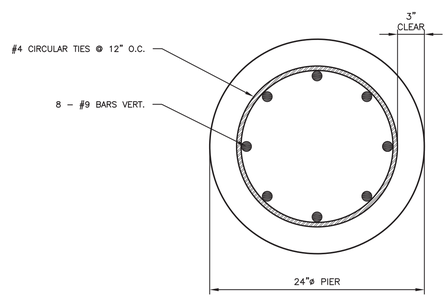

2 S2 AERIAL CROSSING PIER DETAIL SCALE = 1'-0"

NO.	DATE	REVISION	BY
1	04-15-19	UPDATED DETAILS	EG

	DATE	BY
DES.	02-27-19	AMB
DRN.	02-27-19	EG
CHK.	02-27-19	AMB

SCALE: 1 1/2" = 1'-0"

Falkofske Engineering, Inc.
Structural Engineering Consultants
TX Reg. Engineering Firm F-4038
722 North Fielder Road
Arlington, Texas 76012
(817) 261-8300

The use of these plans and specifications shall be restricted to the original site for which they were prepared. Any reproduction or distribution is expressly limited to such use. Any other reproduction, reuse, or disclosure by any method, in whole, or in part, is prohibited. These drawings and specifications contain proprietary information and title remains in FALKOFSKE ENGINEERING.

AERIAL CROSSING
LADERA ROCKWALL - AERIAL CROSSING
JOHN KING BLVD.
ROCKWALL, TEXAS

INTEGRITY GROUP
ROANOKE, TEXAS

STATE OF TEXAS
AARON M. BERKES
107154
LICENSED
PROFESSIONAL ENGINEER
4-15-19

JOB NO. 30.19

S2