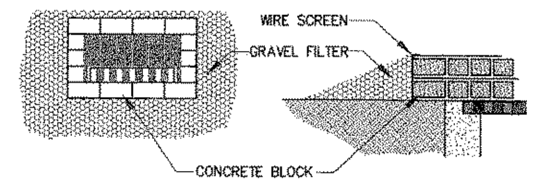

DROP INLET PROTECTION

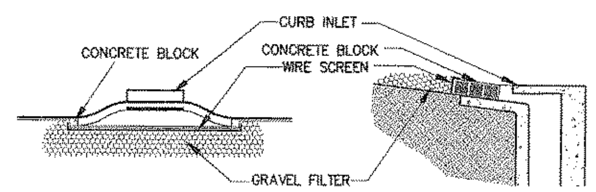

CURB INLET PROTECTION

BLOCK AND GRAVEL PROTECTION
CONCRETE BLOCKS ARE TO BE PLACED ON THEIR SIDES IN A SINGLE ROW AROUND THE PERIMETER OF THE INLET, WITH ENDS ABUTTING. OPENING IN THE BLOCKS SHOULD FACE OUTWARD, NOT UPWARD. WIRE MESH SHALL THEN BE PLACED OVER THE OUTSIDE FACE OF THE BLOCKS COVERING THE HOLES. FILTER STONE SHALL THEN BE PILED AGAINST THE WIRE MESH TO THE TOP OF THE BLOCKS WITH THE BASE OF THE STONE BEING A MINIMUM OF 18 INCHES FROM THE BLOCKS. PERIODICALLY, WHEN THE STONE FILTER BECOMES CLOGGED, THE STONE MUST BE REMOVED AND CLEANED IN A PROPER MANNER OR REPLACED WITH NEW STONE AND PILED BACK AGAINST THE WIRE MESH.

CONSTRUCTION NOTES – INLET PROTECTION

1. THE CONTRACTOR SHALL PROVIDE ANY ADDITIONAL EROSION OR POLLUTION DEVICES AS REQUIRED DURING THE CONSTRUCTION PHASE IN ORDER TO COMPLETELY CONFORM TO THE UNITED STATES ENVIRONMENTAL PROTECTION AGENCY AND ALL OTHER AGENCIES HAVING JURISDICTION.
2. CONTRACTOR AND OWNER SHALL FILE N.O.I. PER EPA REQUIREMENTS.
3. ONSITE CURB INLET PROTECTION SHALL BE CONSTRUCTED UPON INSTALLATION OF APPLICABLE ON SITE STORM SEWER.

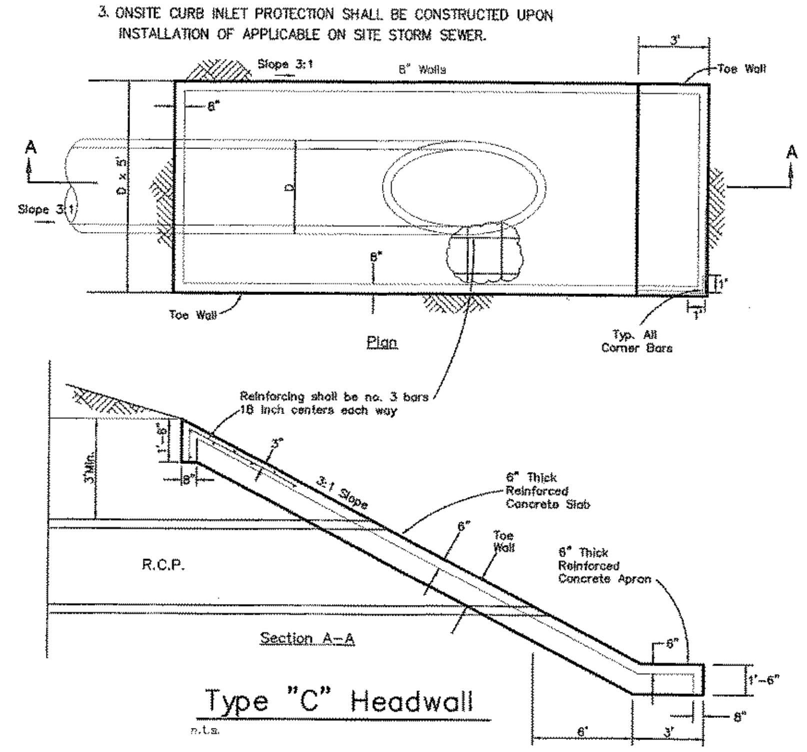

Type "C" Headwall

n.t.s.

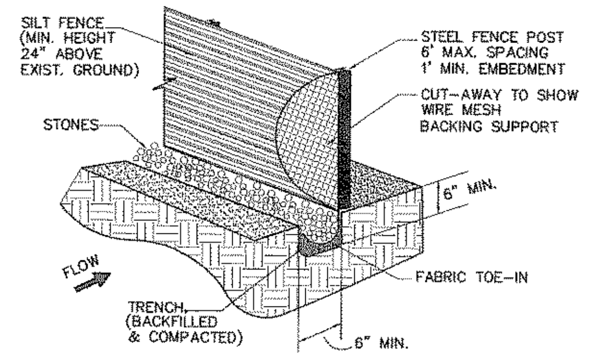

SILT FENCE

NOTES :

1. STEEL POSTS WHICH SUPPORT THE SILT FENCE SHALL BE INSTALLED ON A SLIGHT ANGLE TOWARD THE ANTICIPATED RUNOFF SOURCE. THE POST MUST BE EMBEDDED A MINIMUM OF ONE FOOT.
2. THE TOE OF THE SILT FENCE SHALL BE TRENCHED IN WITH A SPADE OR MECHANICAL TRENCHER, SO THAT THE DOWNSLOPE FACE OF THE TRENCH IS FLAT AND PERPENDICULAR TO THE LINE OF FLOW. WHERE FENCE CANNOT BE TRENCHED IN (E.G. PAVEMENT), WEIGHT FABRIC FLAP WITH WASHED GRAVEL ON THE UPHILL SIDE TO PREVENT FLOW UNDER FENCE.
3. THE TRENCH MUST BE A MINIMUM OF 6 INCHES DEEP AND 6 INCHES WIDE TO ALLOW FOR THE SILT FENCE FABRIC TO BE LAID IN THE GROUND AND BACKFILLED WITH COMPACTED MATERIAL.
4. SILT FENCE SHALL BE SECURELY FASTENED TO EACH STEEL SUPPORT POST OR TO WOVEN WIRE, WHICH IS IN TURN ATTACHED TO THE STEEL SUPPORT POST. THERE SHALL BE A 6 INCH DOUBLE OVERLAP, SECURELY FASTENED WHERE ENDS OF FABRIC MEET.
5. INSPECTION SHALL BE MADE WEEKLY OR AFTER EACH RAINFALL. REPAIR OR REPLACEMENT SHALL BE MADE PROMPTLY AS NEEDED.
6. SILT FENCE SHALL BE REMOVED WHEN THE SITE IS COMPLETELY STABILIZED SO AS NOT TO BLOCK OR IMPEDE STORM FLOW OR DRAINAGE.
7. ACCUMULATED SILT SHALL BE REMOVED WHEN IT REACHED A DEPTH OF 6 INCHES. THE SILT SHALL BE DISPOSED OF AT AN APPROVED SITE AND IN SUCH A MANNER AS TO NOT CONTRIBUTE TO ADDITIONAL SILTATION.

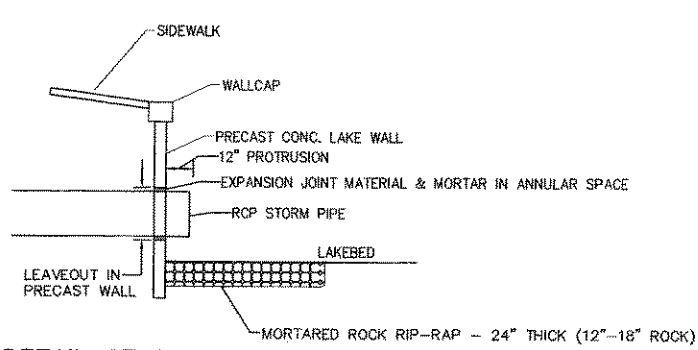

DETAIL OF STORM OUTFALL THROUGH LAKEWALL

NTS

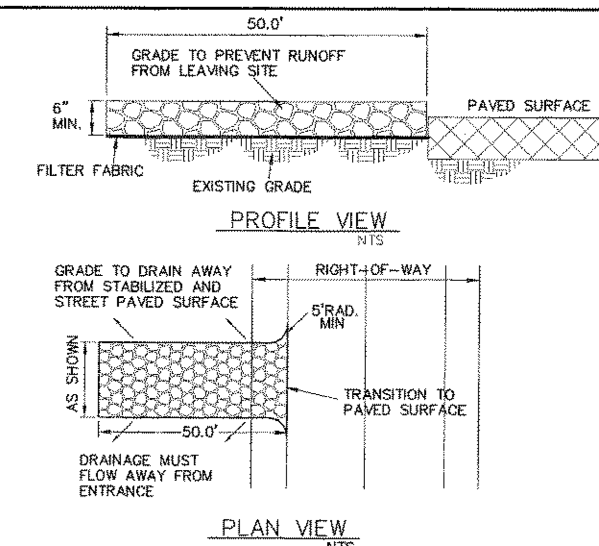

STABILIZED CONSTRUCTION ENTRANCE

NOTES :

1. STONE SHALL BE 3 TO 5 INCH DIAMETER CRUSHED ROCK
2. WHEN NECESSARY, VEHICLES SHALL BE CLEANED TO REMOVE SEDIMENT PRIOR TO ENTRANCE ONTO A PUBLIC ROADWAY. WHEN WASHING IS REQUIRED, IT SHALL BE DONE ON A AREA STABILIZED WITH CRUSHED STONE WITH DRAINAGE FLOWING AWAY FORM BOTH THE STREET AND THE STABILIZED ENTRANCE. ALL SEDIMENT SHALL BE PREVENTED FROM ENTERING ANY STORM DRAIN, DITCH OR WATERCOURSE USING APPROVED METHODS.
3. THE ENTRANCE SHALL MAINTAINED IN A CONDITION WHICH WILL PREVENT TRACKING OR FLOWING OF SEDIMENT ONTO PAVED SURFACES. THIS MAY REQUIRE PERIODIC TOP DRESSING WITH ADDITIONAL STONE A CONDITIONS DEMAND. ALL SEDIMENT SPILLED, DROPPED, WASHED OR TRACKED ONTO PAVED SURFACES, MUST BE REMOVED IMMEDIATELY.
4. THE ENTRANCE MUST BE PROPERLY GRADED OR INCORPORATE A DRAINAGE SWALE TO PREVENT RUNOFF FROM LEAVING THE CONSTRUCTION SITE.

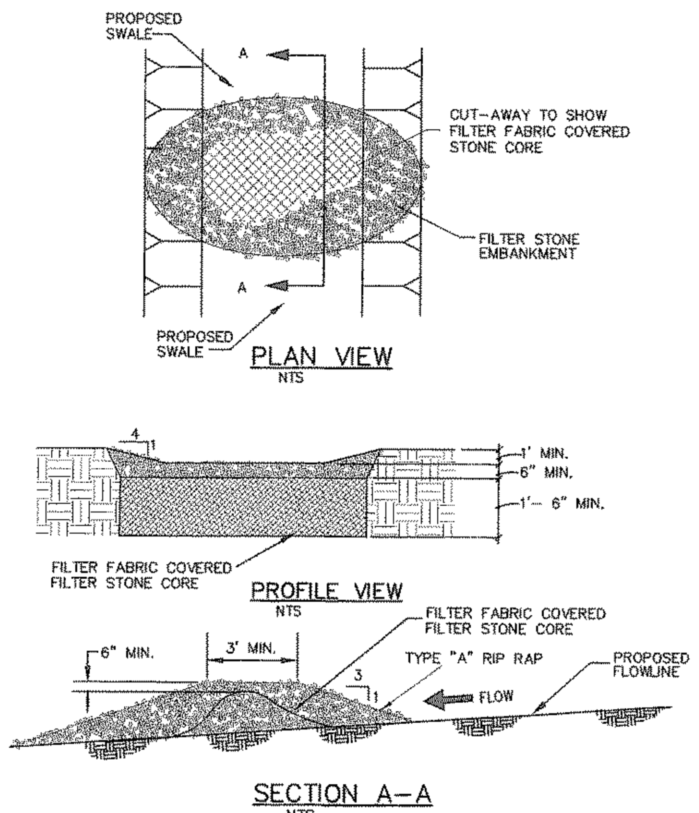

ROCK CHECK DAM

NTS

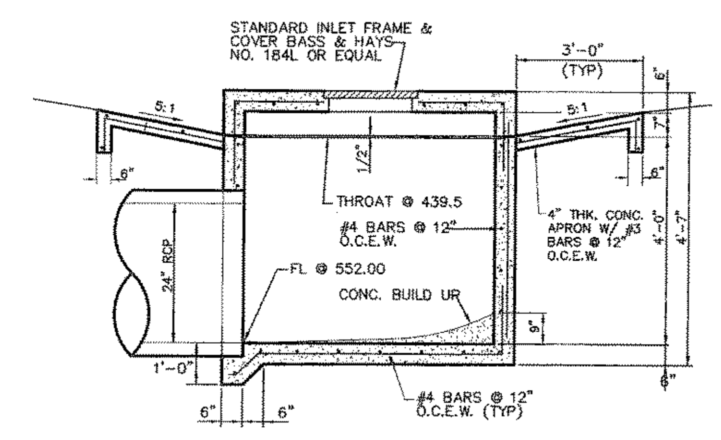

SECTION A-A

N.T.S.

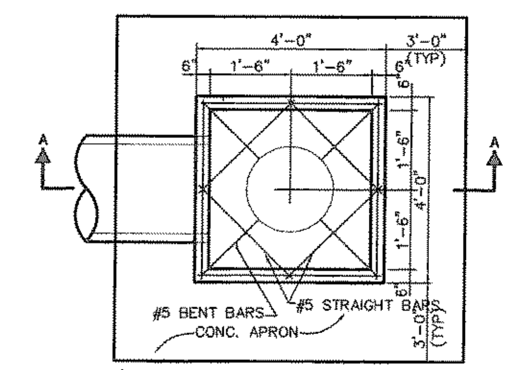

PLAN

NOTES:

1. ALL LAPS AND EXTENSIONS OF REINFORCING BARS SHALL BE 36 BAR DIAMETER UNLESS NOTED OTHERWISE.
2. CONCRETE TO BE MIN. OF 4200 PSI.
3. PIPE MAY BE PLACED IN ANY WALL, BUT SHALL NOT ENTER ANY CORNER, OR BOTTOM.

4'x 4' WYE INLET

ALTERNATE: PRECAST 4'X4' WYE INLET

BENCHMARK:
National Geodetic Survey Control. Designation: Q 1498, PID: CS2517, Monumented in 1986. NAD 83: 32 53 24 (N) / 096 29 22 (W).

3.1 Miles SW from Rockwall. 1.7 Miles southerly along State Highway 205 from its junction with State Highway 66 in Rockwall, Thence 1.45 Miles southwesterly along Interstate Highway 30, set vertically in the north face of the most northerly 1 of 3 columns of the first pier east of the west abutment of the southwest bound highway overpass of Farm Road 740 (exit 67), and 20.7 feet west of the center of the Farm Road. The Mark is 1.4 meters above the Farm Road.

ELEVATION = 445.31 feet (NAVD 88)

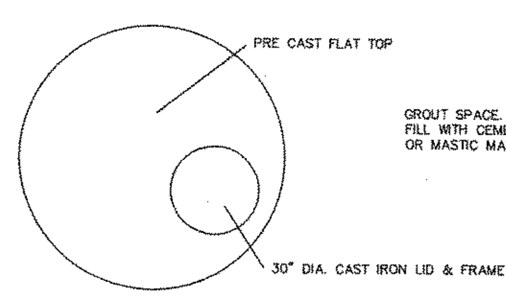

PLAN VIEW
N.T.S.

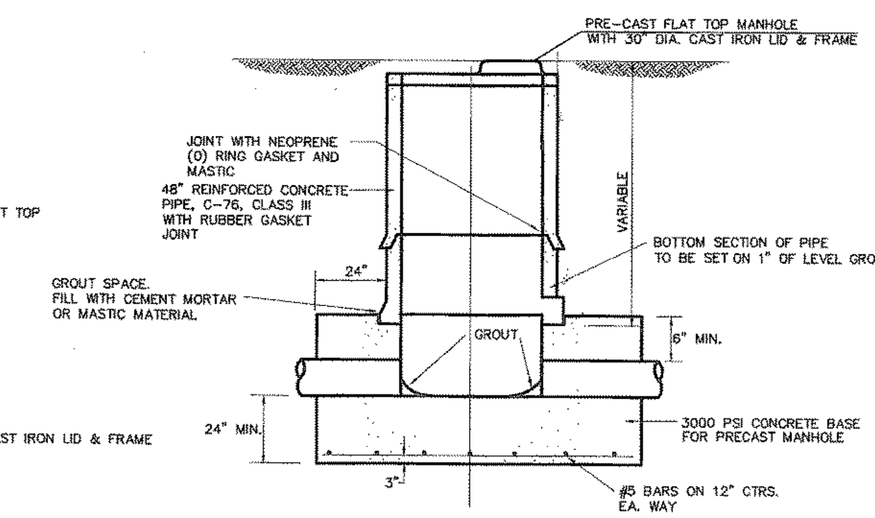

STANDARD PRECAST MANHOLE FOR STORM SEWER

N.T.S.

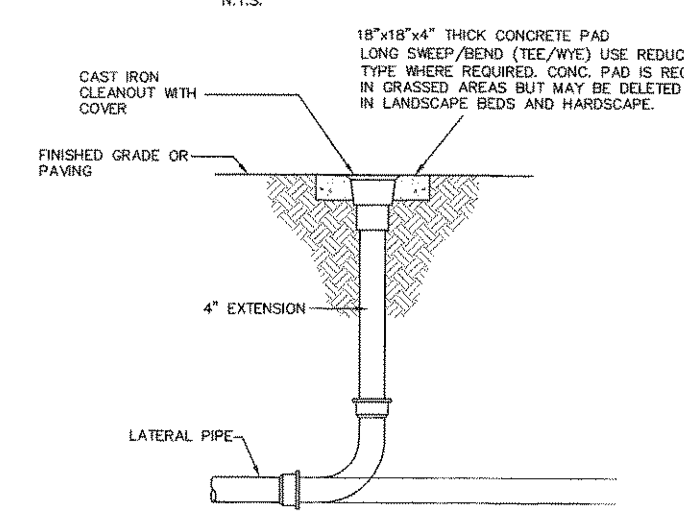

STORM CLEANOUT DETAIL

N.T.S.

APPROVED FOR CONSTRUCTION
DEC 1 5 2005
City of Rockwall Engineering Dept.
City Engineer: ______

DETAILS						
ROCKWALL WATERFRONT PARK PACKAGE 2						
ROCKWALL, TEXAS						
BROCKETTE • DAVIS • DRAKE, INC. consulting engineers Civil & Structural Engineering • Surveying 4144 North Central Expressway, Suite 1100 • Dallas, Texas 75204 (214) 824-3647 • fax (214) 824-7064						
DESIGNED	DRAWN	DATE	SCALE	NOTES	FILE	NO.
TNA	BDD	7/13/05	NTS	BDD	C03360	DT2

©Copyright 2005 Brockette/Davis/Drake, Inc. All Rights Reserved. This drawing is the property of Brockette/Davis/Drake, Inc. Any modification or use of this drawing without the express written authorization of Brockette/Davis/Drake, Inc. is prohibited

I:\Data\Civil\2003\C03360 - ROCKWALL WATERFRONT PARK\CD\PHASE I\PACKAGE 2\DT2-DETAILS-RWP.dwg, 7/13/2005 8:36:45 AM, BDD, AO

TBG
PARTNERS

Landscape Architects · Planners
302 North Market, Suite 480
Dallas, Texas 75202
214/744-0757 Fax: 214/744-0755
Austin · Dallas · Houston · McAllen

Project:
City of Rockwall

The Harbor
Phase I
Public Improvements

Rockwall, Texas

Project Number:
D03991

BROCKETTE • DAVIS • DRAKE, INC.
consulting engineers
Civil & Structural Engineering Surveying
4144 North Central Expressway Suite 1100 Dallas, Texas 75204
(214) 824-3647 fax (214) 824-7064

STATE OF TEXAS
GLENN HITT
40366
LICENSED
PROFESSIONAL ENGINEER
7-13-05

Designed:

Drawn:

Reviewed:

Date Issued:
13 July 2005

Revisions:

Sheet Title:
DETAILS

Sheet Number:
DT2