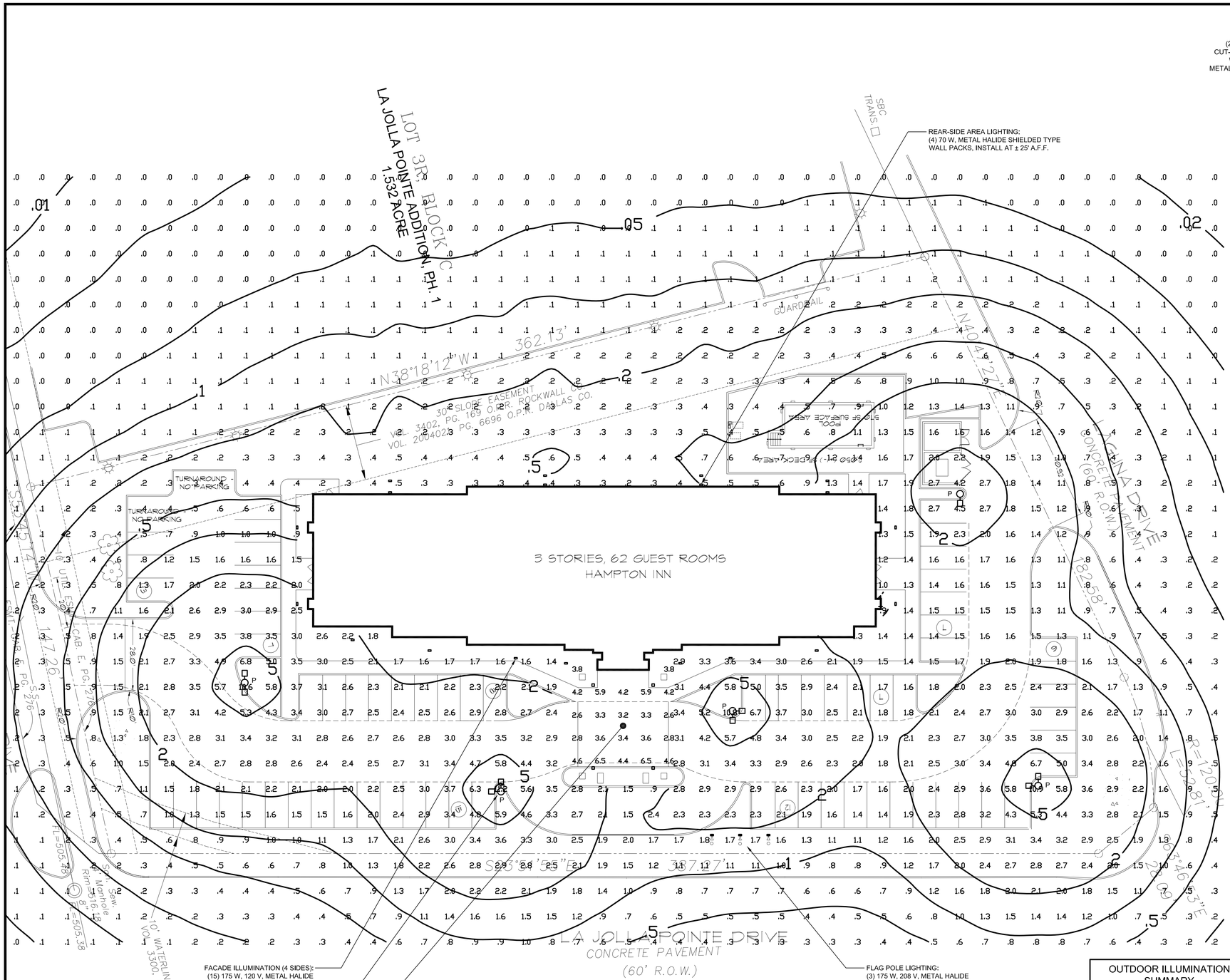

1 SITE PLAN PHOTOMETRICS
1" = 20'-0"

0 10' 20' 40'
GRAPHIC SCALE

OUTDOOR ILLUMINATION SUMMARY	
TOTAL LUMINARIES	35
TOTAL KW LOAD	7.03
# POINTS	1602
AVERAGE F.C.	1.1
MAXIMUM F.C.	11.2

NOTE:

ILLUMINATION NUMBERS AND CURVES SHOWN ON PLAN ARE HORIZONTAL FOOT-CANDLES (F.C.)

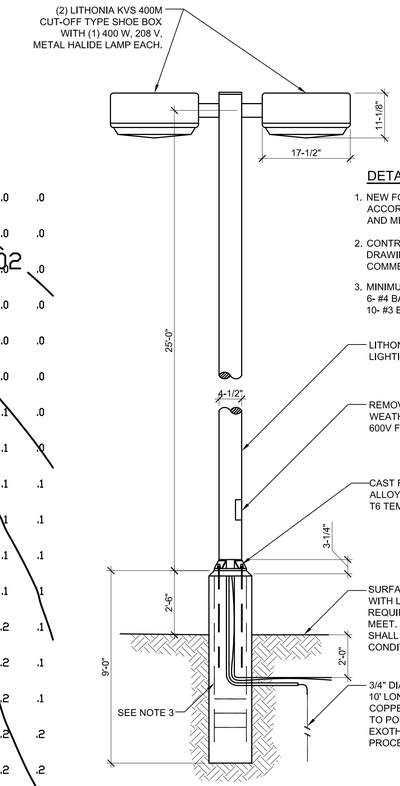

DETAIL NOTES

1. NEW FOUNDATIONS SHALL BE CONSTRUCTED IN ACCORDANCE WITH MANUFACTURERS SPECIFICATIONS AND MEET THE MINIMUM DIMENSION SHOWN
2. CONTRACTOR SHALL PROVIDE CONSTRUCTION DRAWINGS TO THE COR FOR APPROVAL PRIOR TO COMMENCING WORK.
3. MINIMUM REINFORCEMENT SHALL BE:
   6- #4 BARS (VERTICAL)
   10- #3 BAR HOOPS (HORIZONTAL AT 12" O.C.)

LITHONIA SSS-25-4C
LIGHTING POLE

REMOVABLE HAND HOLE COVER INSTALL
WEATHERPROOF FUSE HOLDER AND ISA.
600V FUSE IN PHASE CONDUCTOR

CAST FROM A356 ALUMINUM
ALLOY AND HEAT-TREATED
T6 TEMPER ANCHOR BASE.

SURFACE SHOWN IS TYPICAL AND VARIES
WITH LOCATION. EXPANSION MATL
REQUIRED WHERE CONCRETE SURFACES
MEET. ANY DISTURBED LANDSCAPING
SHALL BE RESTORED TO ORIGINAL
CONDITION.

3/4" DIA. COPPER GROUND ROD
10' LONG WITH NO. 4 BARE
COPPER WIRE. CONNECT WIRE
TO POLE AND ROD BY
EXOTHERMIC WELDING
PROCESS.

2 LIGHT POLE DETAIL
NOT TO SCALE

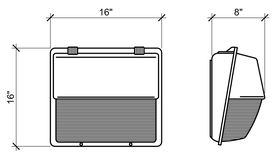

LITHONIA TWP SHIELDED TYPE WALL PACK
WITH (1) 70 W, 208 V, METAL HALIDE LAMP.
INSTALL ON REAR WALL AT 25' A.F.F. MINIMUM
(TYPICAL OF 4)

3 EXTERIOR WALL PACK DETAIL
NOT TO SCALE

SITE PLAN LIGHTING NOTES:

1. PARKING AREA LIGHTING: INSTALL SHOE BOXES (1 OR 2) ON 25-FOOT HIGH ALUMINUM POLES. LIGHTING FIXTURES SHALL BE CUTOFF TYPE WITH HOUSE SIDE SHIELD WHERE ADJACENT TO GUEST ROOMS.
2. COORDINATE LIGHTING LOCATIONS WITH LANDSCAPE PLANTINGS.
3. REFER TO HILTON SIGNAGE STANDARDS FOR ADDITIONAL INFORMATION AND PRECISE SIGNAGE REQUIREMENTS. ELECTRICAL POWER FOR BUILDING AND MONUMENT SIGNAGES SHALL BE PROVIDED AND CONNECTED BY ELECTRICAL CONTRACTOR.
4. BUILDING UP-LIGHTING SHALL NOT BE OBSTRUCTED BY LANDSCAPE PLANTINGS.
5. ALL OUTDOOR LIGHTING SHALL COMPLY WITH APPLICABLE INTERNATIONAL ENERGY CONSERVATION CODE AND CITY AMENDMENTS.
6. ELECTRICAL CONTRACTOR TO VERIFY ILLUMINATION LEVELS AFTER INSTALLATION AND ADJUST LUMINARIES AS NECESSARY.

REVISIONS	BY

PROPOSED
HAMPTON INN
LA JOLLA POINTE DRIVE AND LAGUNA DRIVE
ROCKWALL, TEXAS

STATE OF TEXAS
ROBERT FRIAS
15373
REGISTERED PROFESSIONAL ENGINEER
JUNE 15, 2006

R S S ARCHITECTS LLC.
1304 W. ABRAM STREET, SUITE #250
ARLINGTON, TEXAS 76013
PH: 817/640-9003 FAX: 817/649-8410

SITE PLAN PHOTOMETRICS

Date:	06-15-06
Scale:	As Noted
Drawn:	JLL
Reviewed:	RF
Sheet:	SPP
Of 1	Sheets