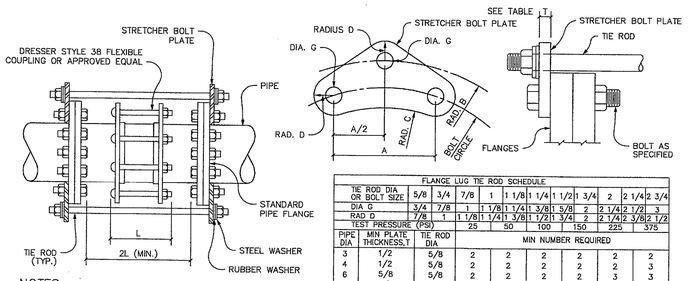

NOTES:

1. ALL DIMENSIONS IN INCHES
2. DIMENSION "A" AS REQUIRED BY FLANGE SPECIFIED.
3. RADIUS "C" EQUALS 1/2 x (BOLT CIRCLE) −D.
4. RADIUS "B" EQUALS 1/2 x (FLANGE CIRCLE) + D + 1/8".
5. INSTALL TIE ROD ASSEMBLIES SUCH THAT ALL RODS ARE EQUALLY SPACED AROUND FLANGE. ON PIPING 20−INCHES AND LARGER, RODS MAY BE GROUPED IN PAIRS BUT GROUPS MUST BE EQUALLY SPACED AROUND FLANGE. THE TOTAL NUMBER OF THE RODS SHALL BE INCREASED ABOVE THAT TABULATED AS NECESSARY TO MEET SPACING REQUIREMENTS.

FLANGE LUG TIE ROD SCHEDULE

TIE ROD DIA OR BOLT SIZE		5/8	3/4	7/8	1	1 1/8	1 1/4	1 1/2	1 3/4	2	2 1/4	2 3/4
DIA G		3/4	7/8	1	1 1/8	1 1/4	1 3/8	1 5/8	2	2 1/4	2 1/2	3
RAD D		7/8	1	1 1/8	1 1/4	1 3/8	1 1/2	1 3/4	2	2 1/4	2 3/8	2 1/2
TEST PRESSURE (PSI)				25	50		100	150		225		375
PIPE DIA	MIN PLATE THICKNESS,T	TIE ROD DIA	MIN NUMBER REQUIRED									
3	1/2	5/8		2	2		2	2		2	2	
4	1/2	5/8		2	2		2	2		2	3	
6	5/8	5/8		2	2		2	2		3	3	
8	5/8	3/4		2	2		2	2		3	4	
10	7/8	7/8		2	2		2	2		3	4	
12	7/8	1		2	2		2	2		3	5	
14	7/8	1		2	2		2	3		4	–	
16	7/8	1 1/8		2	2		2	3		4	–	
18	7/8	1 1/8		2	2		3	4		5	–	
20	7/8	1 1/8		2	2		3	4		6	–	
22	1 1/8	1 1/4		2	2		3	4		6	–	
24	1 1/8	1 1/4		2	2		3	4		6	–	
30	1 3/8	1 1/2		2	2		3	5		7	–	
36	1 5/8	1 3/4		2	2		3	5		7	–	

THRUST HARNESS FOR FLEXIBLE COUPLING
STANDARD DETAIL

SCALE: N.T.S.

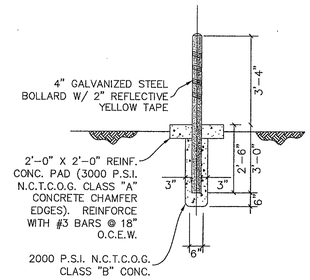

6" BOLLARD
TYPICAL ELEVATION

No Scale

NOTE:

1. THE CONTRACTOR SHALL PROVIDE AND INSTALL ONE MANHOLE ODOR FILTER INSERT IN EACH OF THE COMBINATION AIR VALVE MANHOLES. THE MANHOLE ODOR FILTER SHALL BE THE WOLVERINE BRAND AS SUPPLIED BY SIMPLE SOLUTIONS DISTRIBUTING, LLC 1-866-677-8465, OR APPROVED EQUAL.

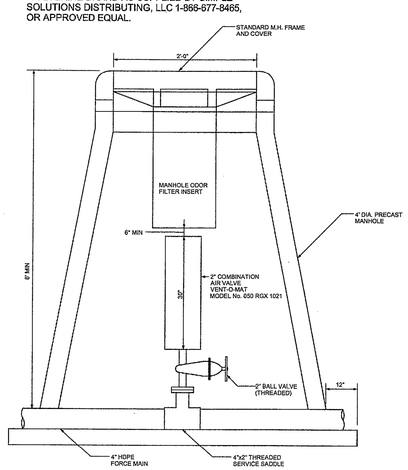

AIR RELEASE VALVE & VAULT
STANDARD DETAIL

SCALE: N.T.S.

RECORD DRAWING
THIS RECORD DRAWING HEREIN REFLECTS TO THE BEST OF THE DESIGN ENGINEER'S KNOWLEDGE, THE APPROXIMATE LOCATION OF THE CONSTRUCTED WORK, USING INFORMATION AS PROVIDED BY THE CONTRACTORS AND SURVEYED GRADES.

Kimley-Horn and Associates, Inc.
12700 Park Central Drive, Suite 1800
Dallas, Texas 75251
Tel. No. (972) 770-1300
Fax No. (972) 239-3820

TEXAS MARTY S. HARRIS 84768 LICENSED PROFESSIONAL ENGINEER 5-21-2008

EVERGREEN AT ROCKWALL

CONSTRUCTION DETAILS

Scale: AS SHOWN
Designed by: KHA
Drawn by: KHA
Checked by: KHA
Date: MAY 2008
Project No. 063990013

SHEET
C-40

kelle.dennison – 5/22/2008 8:27am
File: S:\CIVIL\063901\Design\Lift Station and Offsite SS Design\LIFT-01-Details.dwg, – C-40
Tab: C-40, Layout: C-40, Xrefs: , Plotted: Dennison, Kelle, Plot Date: 5/22/2008, Plot Scale: 1:1, Pen Table: Points Air_valve
Images: RAC.gif