Revision	Date	Description
4	8/20/13	PAVING & STORM LINE REVISION

NOTE

INDIVIDUAL LOT GRADING PLANS WILL BE SUBMITTED TO THE CITY OF ROCKWALL BY THE BUILDER / ARCHITECT / ENGINEER, PRIOR TO ISSUANCE OF A BUILDING PERMIT FOR EACH LOT. THIS GRADING PLAN INDICATES THE DIRECTION OF FLOW FOR LOT RUNOFF AND DRAINAGE EASEMENTS. ALL RETAINING WALLS ARE TO BE DESIGNED BY A REGISTERED PROFESSIONAL ENGINEER AND SUBMITTED TO THE CITY OF ROCKWALL FOR APPROVAL WITH THE SUBMISSION OF LOT GRADING PLAN.

* LOTS 1–3 OF BLOCK A TO POTENTIALLY REQUIRE SPLIT LEVEL FOUNDATIONS.

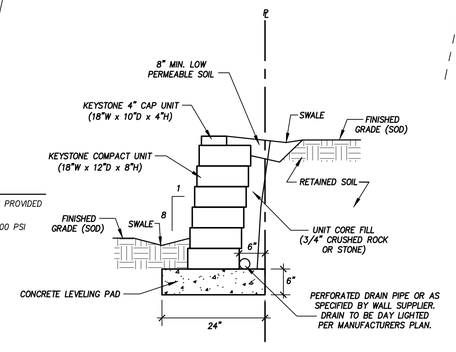

NOTES:

1. WALL HEIGHT DESIGN TO BE PROVIDED BY WALL SUPPLIER.
2. LEVELING PAD IS TO BE 2000 PSI UNREINFORCED CONCRETE.

KEYSTONE WALL DETAIL

NTS

BENCHMARK

SET "X" CUT IN CENTER OF CONCRETE MEDIAN IN FRONT OF HOUSE #1310 RIDGE ROAD. APPROXIMATELY 30.9' EAST OF WEST CURVE LINE AND 10' SOUTH OF MEDIAN NOSE.

ELEV=554.18

CAUTION EXISTING UTILITIES !!!

EXISTING UTILITIES AND UNDERGROUND FACILITIES INDICATED ON THESE PLANS HAVE BEEN LOCATED FROM REFERENCE INFORMATION. IT SHALL BE THE RESPONSIBILITY OF THE CONTRACTOR TO VERIFY BOTH HORIZONTALLY AND VERTICALLY THE LOCATION OF ALL EXISTING UTILITIES AND UNDERGROUND FACILITIES PRIOR TO CONSTRUCTION, TO TAKE THE NECESSARY PRECAUTIONS IN ORDER TO PROTECT ALL FACILITIES ENCOUNTERED. THE CONTRACTOR SHALL PRESERVE AND PROTECT ALL EXISTING UTILITIES FROM DAMAGE DURING CONSTRUCTION.

This drawing is proprietary and may not be copied or used in any way without the written permission of FC Cuny Corporation – ©Copyright – FC Cuny Corporation

AS BUILT

Owner:
Dan Bobst
5133 F.M. 549 • Rockwall, Texas • 75032
Phone: 214-553-5505

Eagle Point Estates
Rockwall, Texas

~ Civil Engineer ~
F.C. CUNY CORPORATION
#2 Horizon Court • Heath, Texas 75032 • (469) 402-7700
Texas Registered Engineering Firm F-7449

Drawn By:	Checked By:
F.C. CUNY	F.C. CUNY
Date: 08/11	Project No.: –

Sheet Title: Grading Plan

Scale:	Sheet No.:
1" = 40'	11 of 12

Z:\Projects\S-Residential\Dan Bobst\AS BUILT\11 - GRADING PLAN.dwg