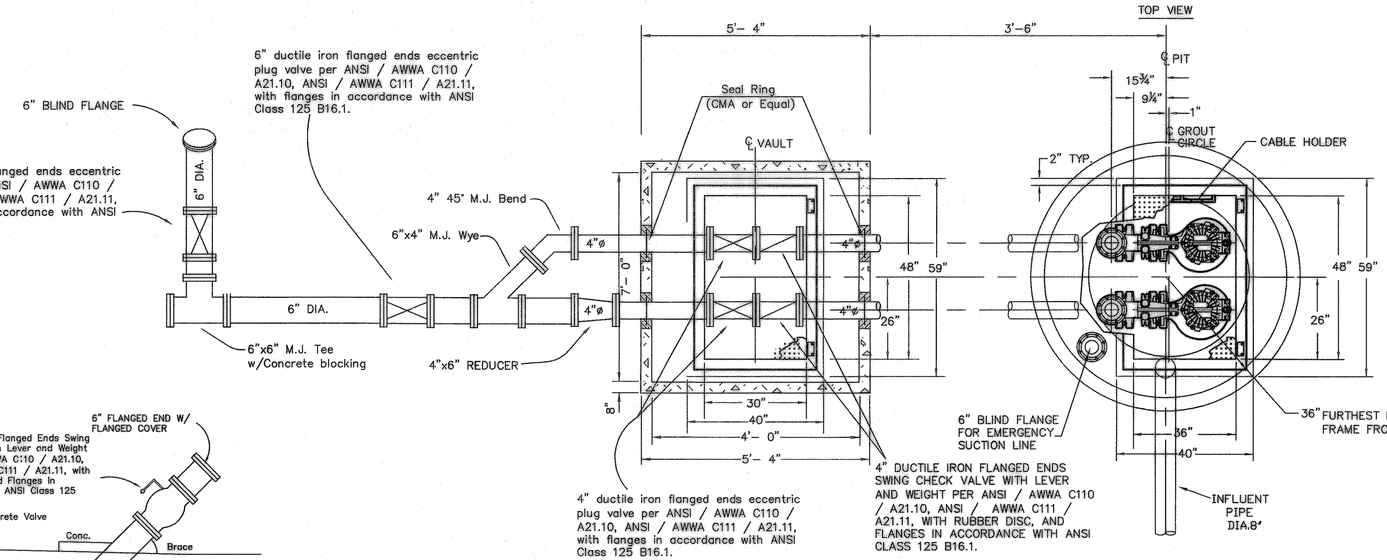

LIFT STATION PLAN VIEW

NOT TO SCALE

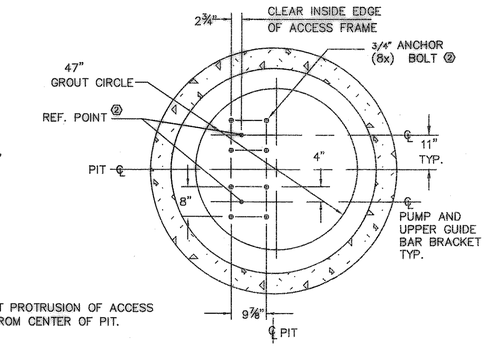

LIFT STATION BASE PIT

NOT TO SCALE

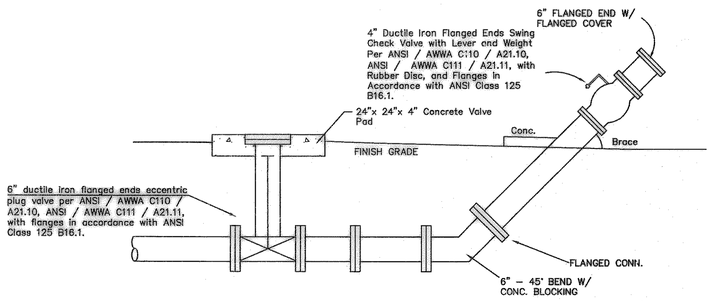

6" EMERGENCY PUMP LINE DETAIL

NOT TO SCALE

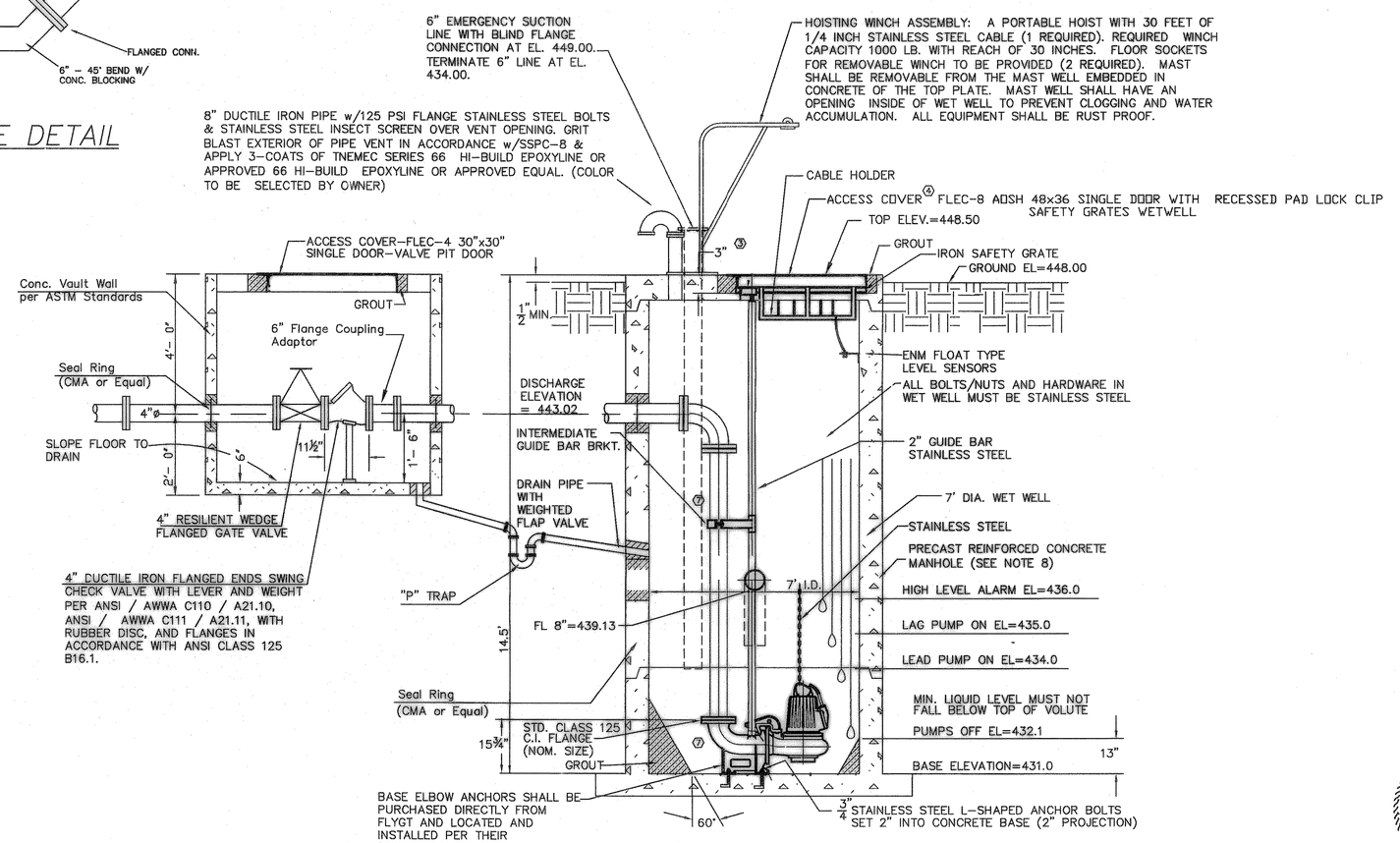

LIFT STATION PROFILE VIEW

NOT TO SCALE

NOTES:

1. SEAL GAS PREVENTION ON ALL CONDUITS OUT OF LIFT STATION AND INTO CONTROL CABINET.
2. LOCATE ANCHOR BOLTS USING CLEAR INSIDE EDGE OF ACCESS FRAME AND CENTER LINE OF PUMP AS REF. POINT. BOLT LOCATIONS MUST BE HELD TO MAINTAIN EXACT POSITION OF PUMP RELATIVE TO ACCESS FRAME.
3. GROUT OPENING FOR ACCESS FRAME.
4. FLYGT ACCESS COVER MADE OF ALUMINUM, WITH STAINLESS STEEL HARDWARE, ANGLE TYPE FRAME WITH LOAD CAPACITY OF 300 POUNDS PER SQUARE FOOT, FLUSH DROP HANDLE, AUTOMATIC HOLD–OPEN ARM, RECESSED TAMPER RESISTANT PADLOCK ASSEMBLY.
5. CONFIGURATION AND DIMS. SHOWN ARE MIN. REQUIREMENTS ONLY.
6. FOR OUTLINE DIMENSIONS OF PUMP, SEE FLYGT DETAIL CP–3127
7. ALL EXPOSED PIPING SHALL BE COATED WITH TWO 6 MIL DFT COATS (12 MIL TOTAL) OF DEVOE BAR–RUST 233H HIGH PERFORMANCE EPOXY COATING OR APPROVED EQUAL.
8. WETWELL SHALL BE CONSTRUCTED IN ACCORDANCE WITH ASTM C 478–97 "STANDARD SPECIFICATION FOR PRECAST REINFORCED CONCRETE MANHOLE SECTIONS" AND ASTM C–443–98 "STANDARD SPECIFICATIONS FOR JOINTS FOR CIRCULAR CONCRETE SEWER AND CULVERT PIPE, USING RUBBER GASKETS".
9. FLEXIBLE CONNECTORS SHALL BE USED TO PRODUCE A POSITIVE WATERTIGHT CONNECTION FOR PIPES ENTERING PRECAST MANHOLE AND SHALL BE IN ACCORDANCE WITH ASTM C923 "RESILIENT CONNECTORS BETWEEN REINFORCED CONCRETE MANHOLE STRUCTURES AND PIPES".
10. SEE SHOP DRAWINGS FOR THICKNESS AND REINFORCING OF CONCRETE VAULT.
11. INSTALLATION WILL REQUIRE PHONE LINE RUN TO LIFT STATION. (BY DEVELOPER)

NOTE:

ALL JOINTS SHALL BE LOCATED ABOVE THE OPERATING LEVELS OF THE WET WELL 434.00–439.00. THE BASE SHALL BE INTERGRALLY CAST WITH THE FIRST SECTION OF PIPE. ALL JOINTS SHALL BE SEALED WITH O–RING SEALS AND THE INTERIOR AND EXTERIOR OF EACH JOINT SHALL BE SEALED WITH NON–SHRINK GROUT. JOINTS IN THE VALVE VAULT SHALL BE TREATED THE SAME AS WELL.

ALL EXPOSED CONCRETE AND GROUT SURFACES INSIDE THE WET WELL SHALL BE ABRASIVE BLASTED TO SSPC–SP13/NACE6 PRIOR TO APPLICATION OF 6.0 MIL DFT PRIME COAT OF TNEMEC 201 EPOXOPRIME, 125 MIL DFT OF TNEMEC 434 CHEMBLOCK H2S AND A 16 MIL DFT TOPCOAT OF TNEMEC 435 CHEMGEL OR APPROVED EQUAL.

AS BUILT PLANS
05/11/07

The alignment and grade were set on the ground for construction per the plans. The engineer did not verify alignment or grades after construction. We are not aware of any changes or revisions to these plans during construction except as noted.

NOTE:
All Dimensions to be verified with the Shop Drawings prior to Construction.

STATE OF TEXAS
RICHARD HOVAS
58877
REGISTERED PROFESSIONAL ENGINEER
4/19/06

4802LS 4–19–06

LIFT STATION DETAIL

CASTLE RIDGE ESTATES PHASE 1
CITY OF ROCKWALL, TEXAS

TIPTON ENGINEERING, INC.
ENGINEERING • SURVEYING • PLANNING
6330 Broadway Blvd. • Suite C • Garland, Texas 75043 • (972) 226–2967

DESIGN	DRAWN	DATE	SCALE	NOTES	FILE	NO.
TE, Inc.	TE, Inc.		1"=40' H.	TE, Inc.	4802	19