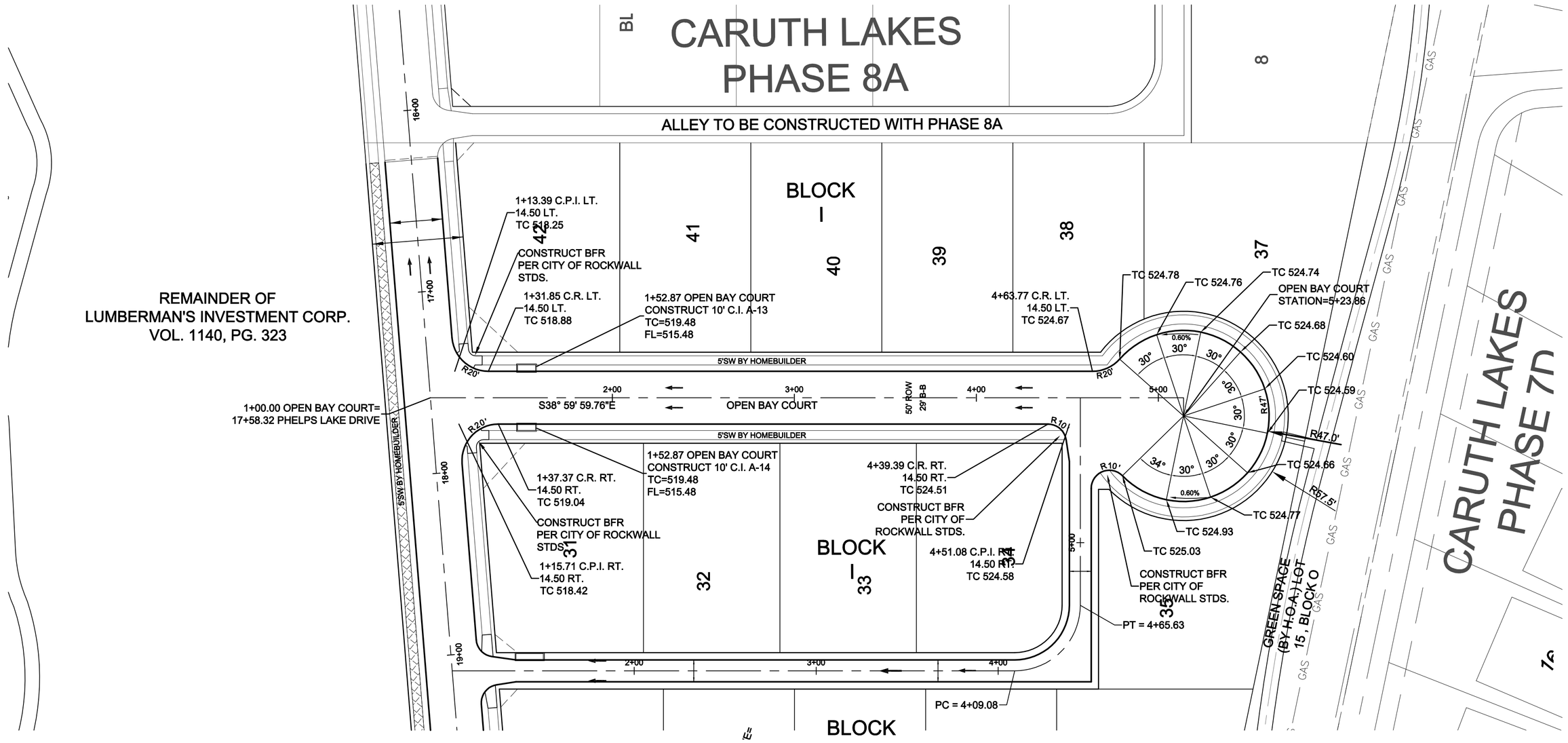

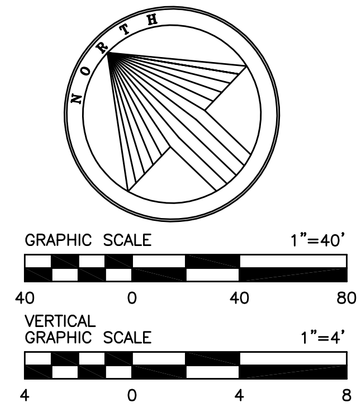

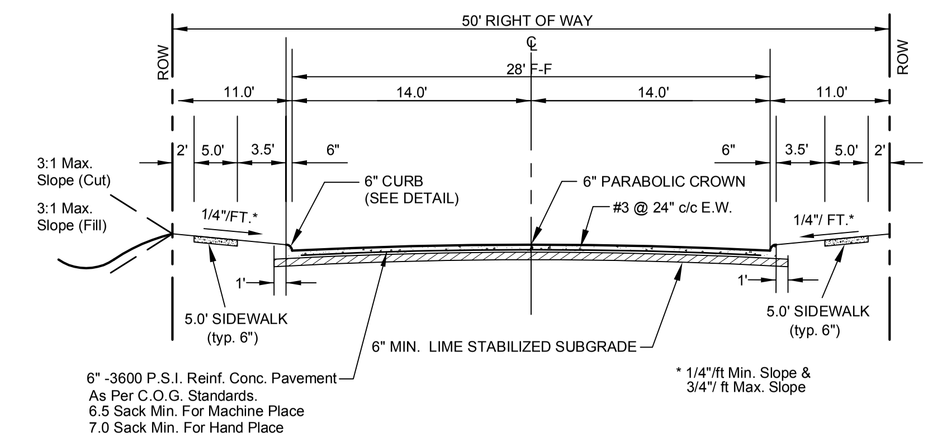

TYPICAL PAVEMENT SECTION (29' B-B)

N.T.S.

NOTE:

1. PAVEMENT FOR STREETS SHALL CONSIST OF 6" 3600 P.S.I. REINFORCED CONCRETE AND 6" LIME-STABILIZED SUBGRADE WITH 6" PARABOLIC CROWN.
2. PAVEMENT FOR ALLEYS SHALL CONSIST OF 4000 P.S.I. REINFORCED CONCRETE AND 6" LIME-STABILIZED SUBGRADE WITH 5" INVERT. TYPICAL ALLEY SECTION WILL BE 7'-5'-7".
3. CONTRACTOR TO RUN LIME SERIES BEFORE CONSTRUCTION.

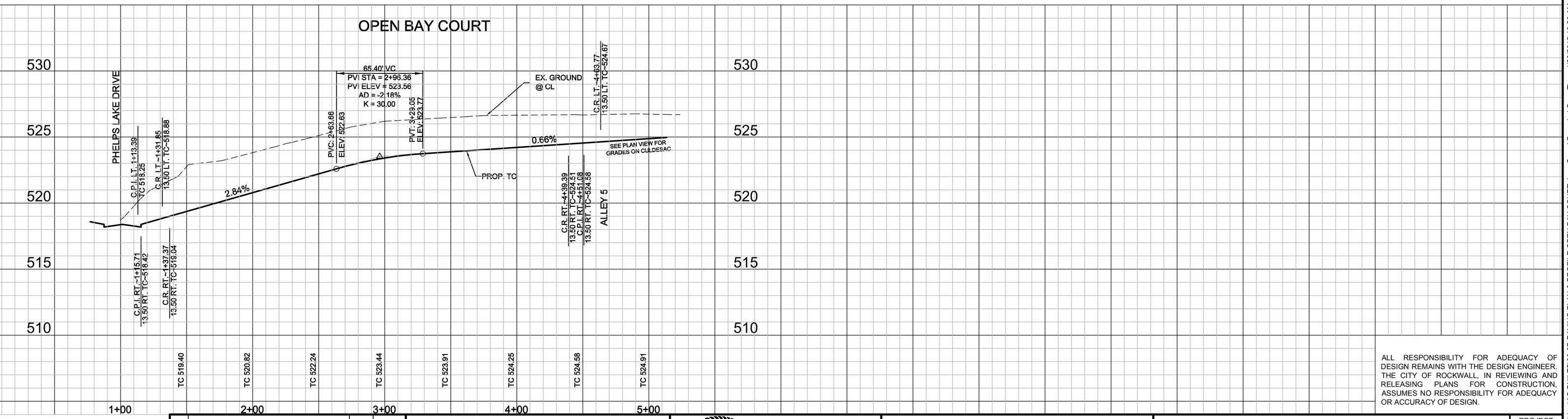

ALL RESPONSIBILITY FOR ADEQUACY OF DESIGN REMAINS WITH THE DESIGN ENGINEER. THE CITY OF ROCKWALL, IN REVIEWING AND RELEASING PLANS FOR CONSTRUCTION, ASSUMES NO RESPONSIBILITY FOR ADEQUACY OR ACCURACY OF DESIGN.

BENCHMARKS

1. X-chiseled in CL of Alley East of Morningstar Drive within the third lot north of Midnight Pass.
Elevation = 513.26

2. PK Nail in CL of Caruth Lane & Alley intersection 150 feet +/- east of Morningstar Drive.
Elevation = 491.68

NO.	REVISIONS DURING CONSTRUCTION	BY	DATE

AS-BUILT DRAWING

TO THE BEST OF JBI PARTNERS, INC. KNOWLEDGE HEREBY STATES THIS PLAN IS AS-BUILT. THE INFORMATION PROVIDED IS BASED ON CONSTRUCTION STAKING AND PAD VERIFICATION AT THE SITE AND INFORMATION PROVIDED BY THE CONTRACTOR.

NAME 06-04-2015 DATE

STATE OF TEXAS
DANIEL DEWEY
93961
PROFESSIONAL ENGINEER

The seal appearing on this document was authorized by DANIEL DEWEY, P.E. 93961. Alteration of a sealed document without proper notification to the responsible engineer is an offense under the Texas Engineering Practice Act.
07-31-2014

JBI PARTNERS
16301 Quorum Drive
Suite 200 B
Addison, Texas 75001
Main 972.248.7676
Fax 972.248.1414
www.jbipartners.com
Texas Registered Engineering Firm F-438

PAVING PLAN & PROFILE	PROJECT NO.
OPEN BAY COURT	HOE132F
Caruth Lakes Phase 8B	SHEET NO.
City of Rockwall, Texas	6

Drawing: H:\Projects\HOE132F\dwg\AS-BUILTS\06-8B PAVING PLAN & PROFILE OPEN BAY COURT.dwg Saved By: ychoi Save Time: 4/20/2015 10:26 AM

Plotted by: ddewey Plot Date: 6/4/2015 8:41 AM