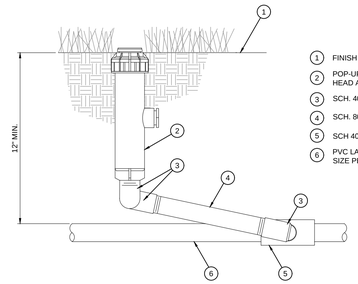


1. FINISH GRADE
2. POP-UP ROTOR - SET TOP OF HEAD AT FINISH GRADE
3. SCH. 40 PVC ELL (2)
4. SCH. 80 PVC NIPPLE, 8" LONG
5. SCH 40 PVC TEE - SxSxT
6. PVC LATERAL LINE, SIZE PER PLAN

## M POP-UP ROTOR
SCALE: NOT TO SCALE

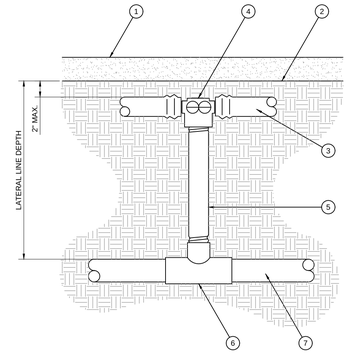


1. TOP OF MULCH
2. FINISH GRADE
3. DRIP LINE PER PLAN
4. INSERT TEE OR ELBOW
5. SCH. 80 PVC NIPPLE (LINE SIZE)
6. SCH. 40 PVC TEE (SST)
7. SCH. 40 PVC SUPPLY HEADER (SIZE PER PLAN)

## J SUBSURFACE DRIPLINE CONNECTION
SCALE: NOT TO SCALE

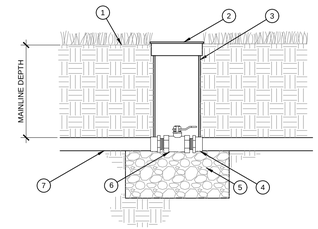


1. FINISH GRADE AT 1" BELOW TOP OF BOX IN TURF AREAS; 2" BELOW TOP OF BOX IN SHRUB/GROUNDCOVER AREAS
2. 9" ROUND VALVE BOX WITH LOCKABLE LID
3. EXTENSION SECTION AS NECESSARY TO MEET GRADE
4. PVC MALE ADAPTER
5. 3-INCH MINIMUM DEPTH OF $\frac{3}{4}$-INCH WASHED GRAVEL
6. BRASS BALL VALVE (SIZED PER MAINLINE)
7. IRRIGATION MAINLINE

## G BRASS BALL VALVE
SCALE: NTS

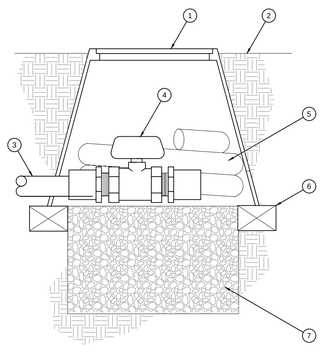

1. 10" ROUND PLASTIC VALVE BOX WITH LOCKABLE LID, "CARSON" OR APPROVED EQUAL
2. FINISH GRADE - TOP OF VALVE BOX TO BE 2" ABOVE FINISH GRADE IN PLANTER AREAS
3. DRIP EXHAUST HEADER
4. BALL VALVE, LINE SIZE
5. 3' COILED LENGTH OF LINE SIZE FLEX HOSE. SOLVENT WELD TO VALVE
6. RED BRICK TYPICAL, 3 REQUIRED
7. 6" DEEP LAYER OF PEA GRAVEL

## K FLUSH VALVE
SCALE: NTS

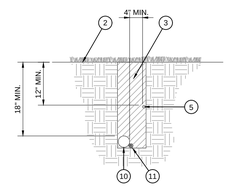


TRENCHING

1. PAVEMENT SURFACE
2. FINISH GRADE
3. TRENCH BACKFILL
4. LOCATOR WIRE W/BURIED CAUTION TAPE
5. PVC IRRIGATION LATERAL
6. SAND BACKFILL
7. SCH. 40 PVC LATERAL SLEEVE - SEE PLANS FOR SIZE
8. SCH. 40 PVC WIRE SLEEVE FOR CONTROL WIRES, MIN. 2" DIA.
9. SCH. 40 PVC MAINLINE SLEEVE - SEE PLANS FOR SIZE
10. PVC IRRIGATION MAINLINE
11. CONTROL WIRES - TAPE TO MAINLINE AT 10' INTERVALS
12. PVC CAP, SOLVENT WELDED

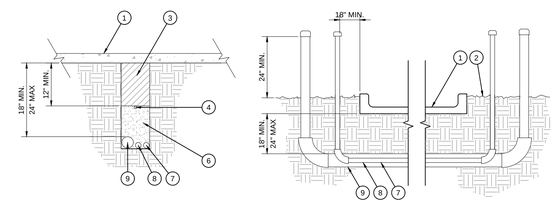


SLEEVING

## H PIPE AND SLEEVE INSTALLATION
SCALE: NTS

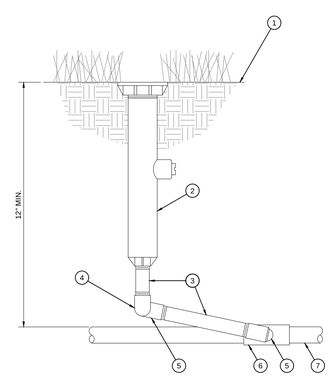


1. FINISH GRADE
2. POP-UP SPRAY HEAD
3. SCH. 80 PVC NIPPLE (LENGTH AS REQUIRED)
4. SCH. 40 PVC ELL
5. SCH. 40 PVC STREET ELL
6. SCH. 40 PVC TEE OR ELL
7. PVC LATERAL PIPE

## L POP-UP SPRAY HEAD
SCALE: NTS

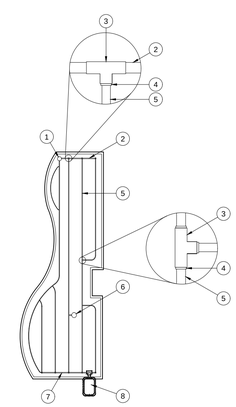

1. FLUSH VALVE
2. SCH. 40 PVC EXHAUST HEADER
3. SCH. 40 PVC TEE OR ELL
4. COMPRESSION ADAPTER
5. DRIP LINE
6. AIR RELIEF VALVE AT HIGH POINT OF SYSTEM (WHERE INDICATED ON PLANS)
7. SCH. 40 PVC SUPPLY HEADER
8. CONTROL VALVE

NOTE: SET DRIP LINES 3"-6" AWAY FROM HARDSCAPE

## I SUBSURFACE DRIP LINE LAYOUT
SCALE: NOT TO SCALE


EVERGREEN DESIGN GROUP
(800) 680-6630
15305 Dallas Pkwy., Ste 300
Addison, TX 75001
www.EvergreenDesignGroup.com



BOHLER™
ENGINEERING NC, PLLC
SITE CIVIL AND CONSULTING ENGINEERING
LAND SURVEYING · PROGRAM MANAGEMENT · LANDSCAPE ARCHITECTURE
SUSTAINABLE DESIGN · FEASIBILITY STUDIES · TAX INCENTIVE SERVICES
UPSTATE NEW YORK · NEW ENGLAND · NEW JERSEY · NEW YORK, NY · NEW YORK METRO · NORTHERN NEW JERSEY · SOUTHERN NEW JERSEY · PHILADELPHIA, PA · LEHIGH VALLEY, PA · SOUTHEASTERN, PA · NORTHEASTERN BEACH, DE · BALTIMORE, MD · SOUTHERN MARYLAND · NORTHERN VIRGINIA · CENTRAL VIRGINIA · RALEIGH, NC · WASHINGTON, DC · CHARLOTTE, NC · ATLANTA, GA · TAMPA, FL · SOUTH FLORIDA · DALLAS, TX
This drawing is the property of the Bohler Engineering group. Reproduction or distribution without the express written consent of Bohler Engineering is prohibited. Only the latest revision of this drawing is valid for construction purposes.


REVISIONS

| REV | DATE | COMMENT | BY |
|---|---|---|---|
| | | | |

KNOW WHAT'S BELOW
ALWAYS CALL 811
**BEFORE YOU DIG**
It's fast. It's free. It's the law.

NOT APPROVED FOR CONSTRUCTION

| | |
|---|---|
| PROJECT No.: | TD180033 |
| DRAWN BY: | CMR |
| CHECKED BY: | RM |
| DATE: | 01/08/19 |
| SCALE: | |
| CAD I.D.: | |

PROJECT:

PROP. SITE PLAN DOCUMENTS
FOR
BRAKES PLUS

LOCATION OF SITE
SW CORNER OF S. GOLIAD ST AND YELLOW JACKET LN
LOTS 1 & 2, BLOCK A, BILLY PEOPLES ADDITION NO. 1
ROCKWALL, TX 75087
ROCKWALL COUNTY


BOHLER ENGINEERING
6017 MAIN STREET
FRISCO, TX 75034
Phone: (469) 458-7300
TX@BohlerEng.com


REGISTERED LANDSCAPE ARCHITECT
CHRISTOPHER M. ROSE
3358
02/01/19

SHEET TITLE:
IRRIGATION DETAILS

SHEET NUMBER:
L-1.4

CASE NUMBER: