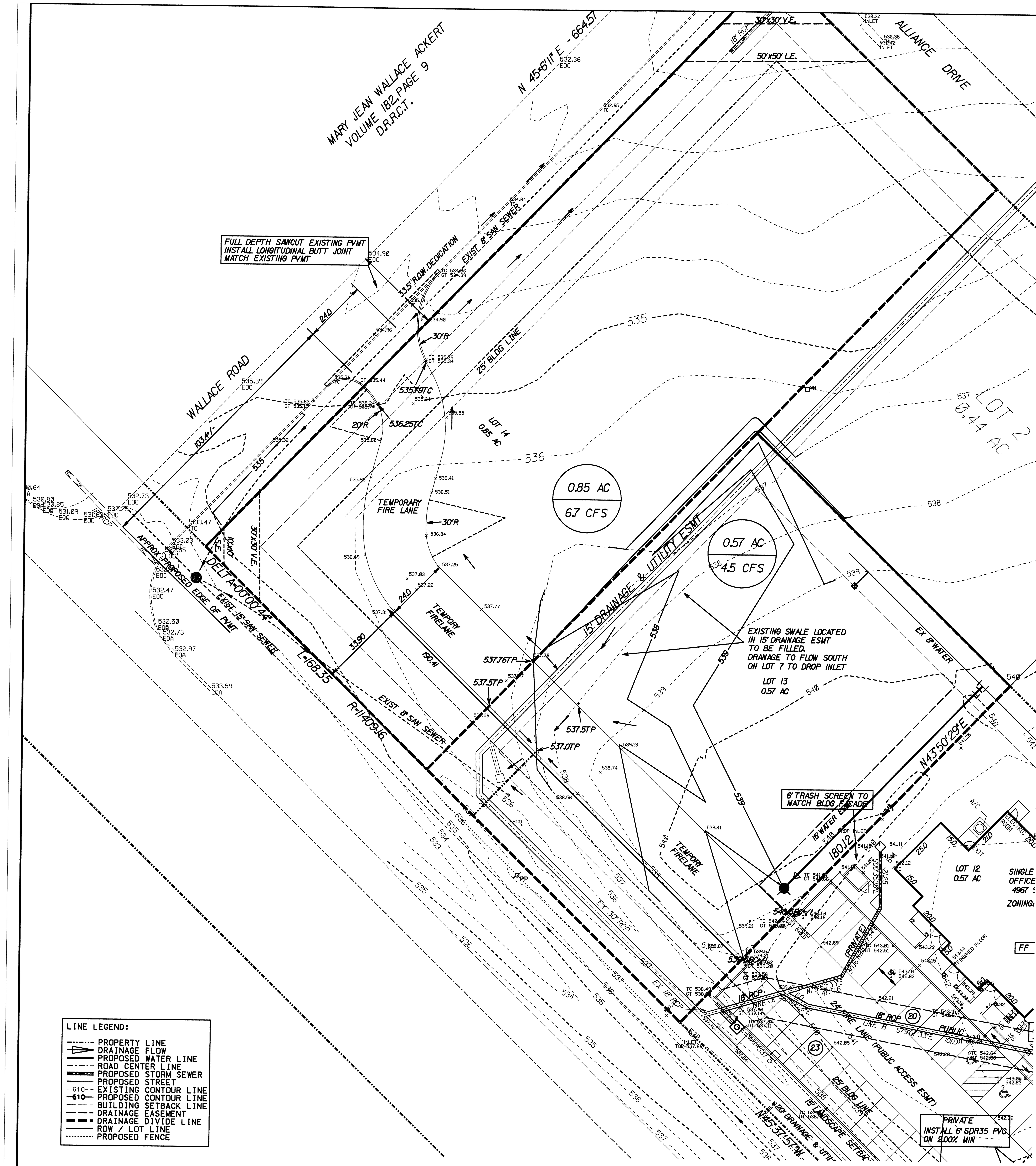

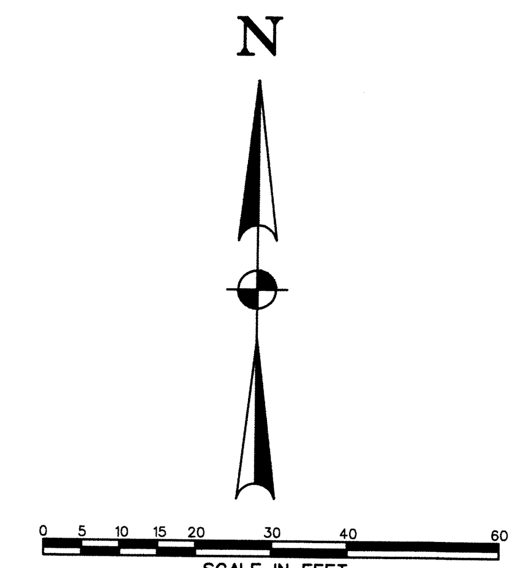

SCALE: 1" = 20'

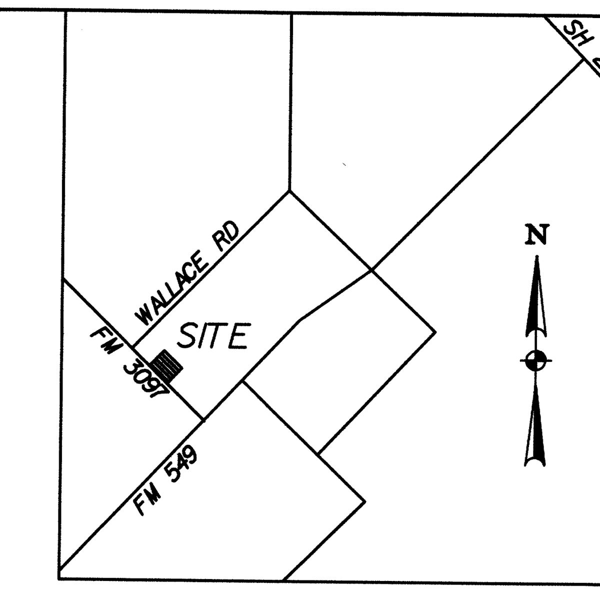

VICINITY MAP
NOT TO SCALE

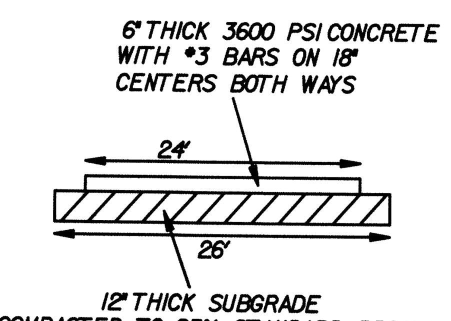

FIRELANE SECTION
NOT TO SCALE

100' DRIVEWAY SPACING ON WALLACE DOES NOT MEET CITY OF ROCKWALL STANDARDS.
200' IS REQUIRED BASED ON THE MASTER THOROUGHFARE PLAN.
WHEN LOT 1 DEVELOPS AND FIRE LANE IS PLATTED, A VARIANCE WILL BE NECESSARY.
WITHOUT A VARIANCE, THE FIRE LANE APPROACH WILL BE REQUIRED TO BE REMOVED
AND INSTALLED AT THE 200' SPACING.

AS-BUILT DRAWING 01-23-14

To the best of our knowledge, Helmberger Associates, Inc., states that this plan is representative of asbuilt conditions. This information is based a visual observations and limited surveying of post construction conditions at the site and information provided by the Owner and Contractor. Field inspection and construction supervision was performed by others.

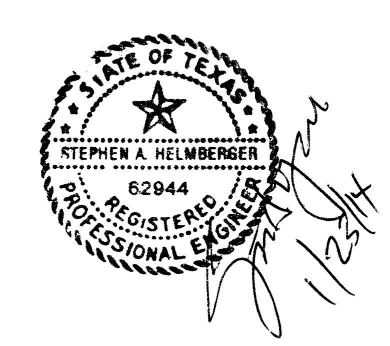

OWNER:
RANDALL NOE ENTERPRISES INC.
P.O. BOX 369
ROCKWALL, TEXAS 75087
MR. ROB WHITTLE
(972) 771-5253

ENGINEER:
HELMBERGER ASSOCIATES, INC.
1525 BOZMAN ROAD
WYLIE, TEXAS 75098
MR. STEPHEN A. HELMBERGER, P.E.
(972) 442-7459

FIRE LANE EXTENSION

LOTS 11 & 12 BLOCK 2 - ALLIANCE ADDITION PH 2

RANDALL NOE ENTERPRISES INC.

CITY OF ROCKWALL, TEXAS

TBPE REGISTRATION NO. 000756

HELMBERGER ASSOCIATES, INC.
CIVIL AND ENVIRONMENTAL ENGINEERS
1525 BOZMAN ROAD, WYLIE TEXAS 75098 (972) 442-7459

DESIGN	DRAWN	DATE	SCALE	NOTES	FILE	NO.
HELM.	CADD	JAN 2014	1"=20'	FL	1308	C6

C:\1308\FL.DGN 1/24/2014 11:03:11 AM