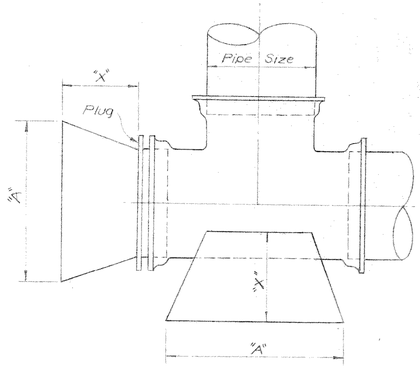

PLUG OR TEE

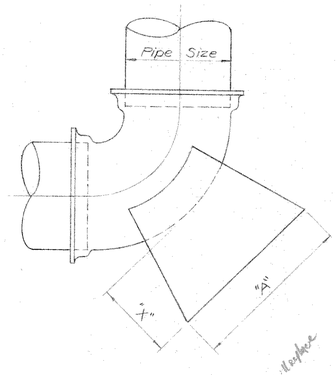

BEND

TYPICAL PLAN

SCHEDULE FOR BLOCKING						
		MINIMUM SQ. FT. "A" AND ESTIMATED QUANTITIES				
Pipe Size	X Min (Feet)	Plug Or Tee	Bend "X" 11 1/4°	22 1/2°	45°	90°
12"	1.5 Cu. Yds.	12 (.30)	3 (.12)	5 (.19)	9 (.34)	16 (.60)
14"	1.75	16 (.60)	4 (.15)	6 (.23)	12 (.50)	22 (.82)
16"	2.0	20 (.75)	5 (.19)	8 (.30)	15 (.56)	28 (1.10)
18"	2.0	25 (1.00)	6 (.23)	10 (.37)	20 (.75)	36 (1.34)
20"	2.0	32 (1.20)	7 (.26)	13 (.50)	24 (.90)	45 (1.70)
21"	2.0	35 (1.30)	8 (.30)	14 (.52)	27 (1.00)	50 (1.90)
24"	2.0	45 (1.70)	10 (.40)	18 (.67)	35 (1.30)	64 (2.40)

Allowance For Blocking Pipe Bends To Be Based On On 0.038 C.Y. Per Square Foot Of Areas Shown On Plans With 0.10 C.Y. Minimum.

Cubic Yds. Of 2000 p.s.i. Concrete Shown Are Allowable In Event Separate Payment Is To Be Made For Blocking. Blocking Concrete To Be 2000#, Minimum Formula For Blocking At Bends:

P (Pounds) = 28.8 x "A" x sin $\frac{\Delta}{2}$
"A" = Inside Pipe Area In Sq. Ft.
Soil Bearing Assumed To Be 1500#/Sq. Ft.
Verify Where Questionable.
Test Pressure 150 P.S.I.

Note: Blowoff To Be On Downstream Channel Side Of Main Line

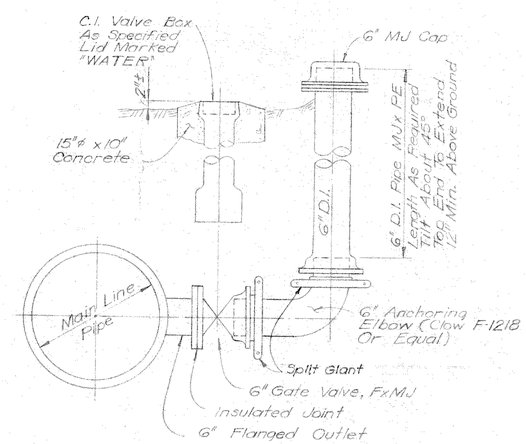

TYPICAL BLOWOFF DETAIL

Not To Scale

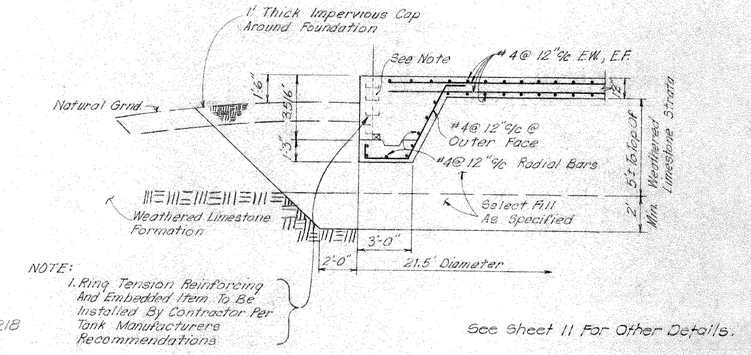

NOTE:
1. Ring Tension Reinforcing And Embedded Item To Be Installed By Contractor Per Tank Manufacturers Recommendations

See Sheet 11 For Other Details.

STANDPIPE FOUNDATION DETAIL

Scale: 1/4" = 1'

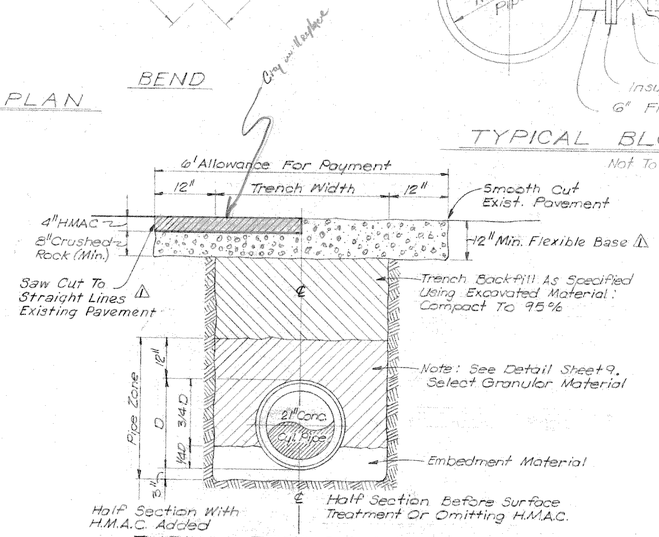

TYPICAL TRENCH SECTION
FOR ASPHALT PAVEMENT AREAS

Do Not Scale

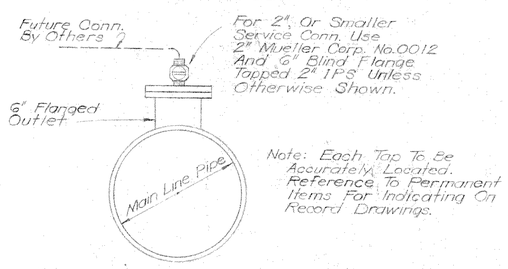

DETAIL SERVICE OUTLET

Not To Scale

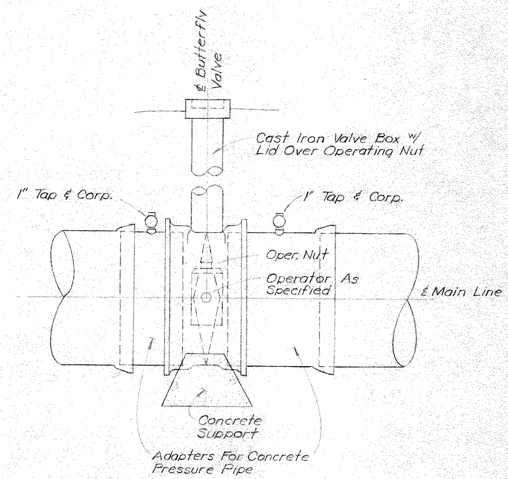

DETAIL - MAIN LINE VALVE

Not To Scale

STATE OF TEXAS
JAMES C. SELLS
17425
REGISTERED PROFESSIONAL ENGINEER
5-23-84

DATE	REVISION	BY
7-3-84	1/1 Add #1 - Typical Trench Section	JCS

DESIGNED J.C.S.
DRAWN
TRACED
CHECKED T.A.R.

JOB NO. NTD 83099B
DATE FEB. 1984
SCALE AS SHOWN

FREESE AND NICHOLS, INC.
CONSULTING ENGINEERS
FORT WORTH-AUSTIN, TEXAS

NORTH TEXAS MUNICIPAL WATER DISTRICT
WATER DISTRIBUTION SYSTEM

TRANSMISSON PIPELINES
MISCELLANEOUS DETAILS

SHEET 10 OF 11