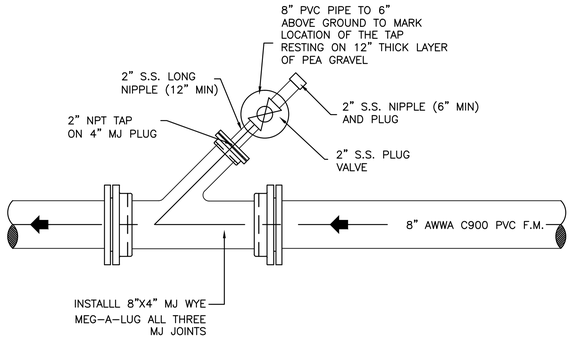

SANITARY SEWER CONNECTION

N.T.S.

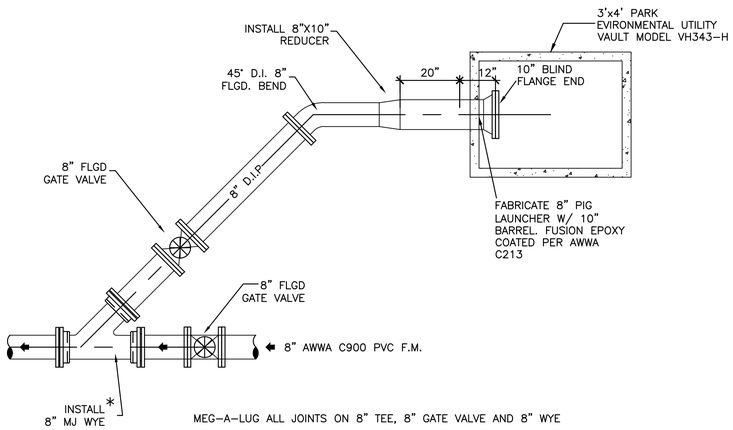

PIG LAUNCHING STATION DETAIL AT LIFT STATION

PLAN VIEW

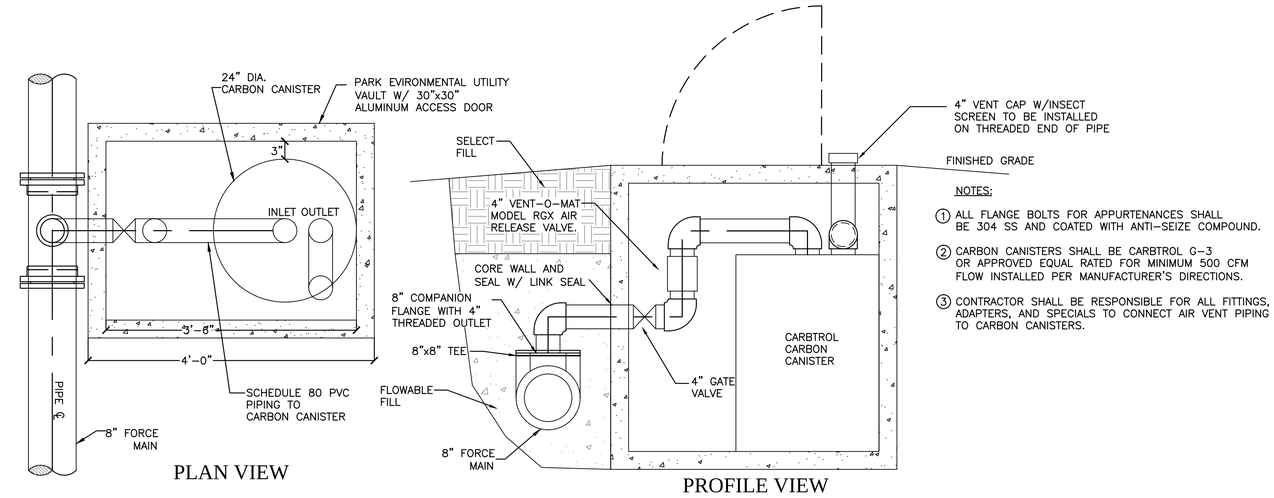

PLAN VIEW

PROFILE VIEW

NOTES:

1. ALL FLANGE BOLTS FOR APPURTENANCES SHALL BE 304 SS AND COATED WITH ANTI-SEIZE COMPOUND.
2. CARBON CANISTERS SHALL BE CARBTROL G-3 OR APPROVED EQUAL RATED FOR MINIMUM 500 CFM FLOW INSTALLED PER MANUFACTURER'S DIRECTIONS.
3. CONTRACTOR SHALL BE RESPONSIBLE FOR ALL FITTINGS, ADAPTERS, AND SPECIALS TO CONNECT AIR VENT PIPING TO CARBON CANISTERS.

AIR RELEASE VALVE DETAIL WITH ODOR CONTROL UNIT

N.T.S.

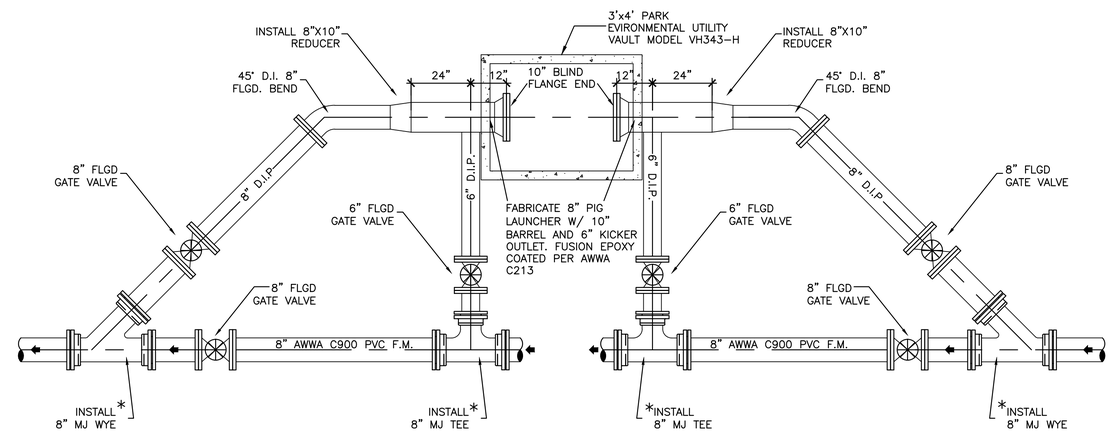

PIG LAUNCHING STATION DETAIL

PLAN VIEW

PIG RECEIVING STATION DETAIL

PLAN VIEW

SCALE: 1/2"=1'-0"

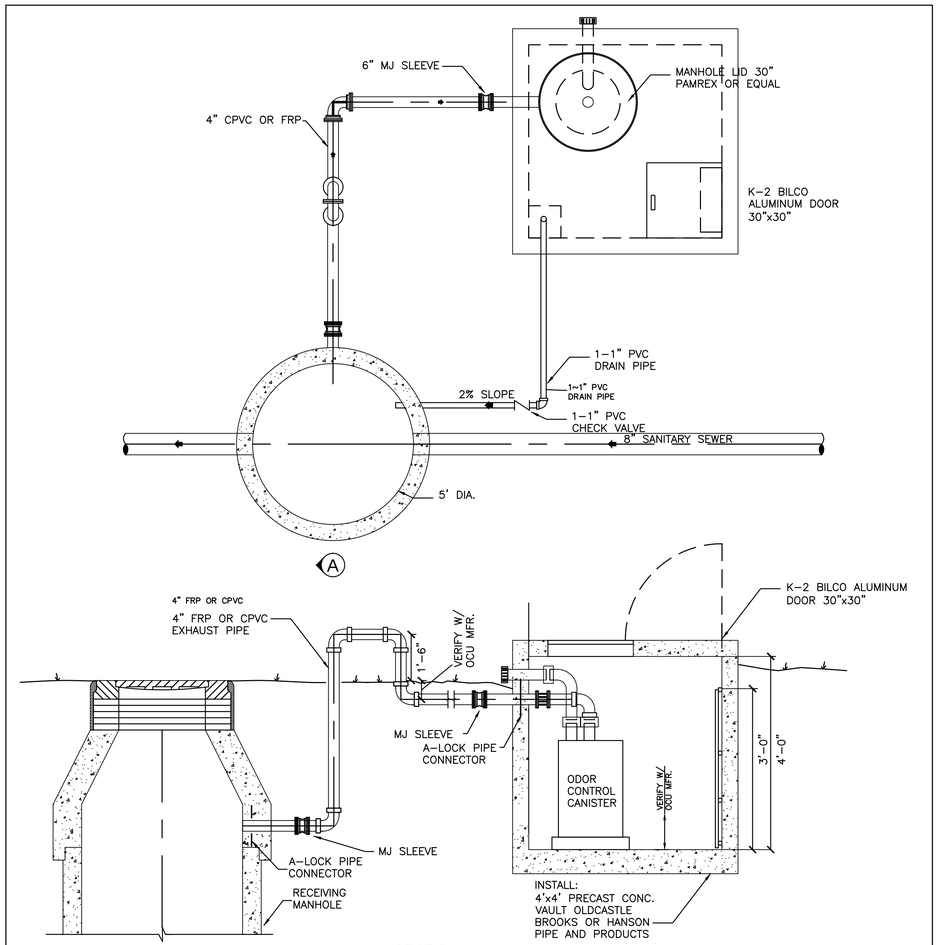

SECTION A-A

ODOR CONTROL UNIT DETAIL AT RECEIVING MANHOLE

N.T.S.

RECORD DRAWING

Revision	Date	Description

Owner:
City of McLendon-Chisholm
1248 S. Hwy 205 • McLendon-Chisholm, TX • 75032
Phone: 972-524-2077

City of McLendon-Chisholm
SANITARY SEWER MAIN

F.C. CUNY CORPORATION
#2 Horizon Court • Ste. 500 • Heath, Texas 75032
Phone: 469-402-7700
Fax: 469-402-0700
Texas Registered Engineering Firm F-7449

THE SEAL APPEARING ON THIS DOCUMENT WAS AUTHORIZED BY CHRISTOPHER R. CUNY, P.E. 65642

STATE OF TEXAS
CHRISTOPHER R. CUNY
65642
REGISTERED PROFESSIONAL ENGINEER

5-9-2014

Drawn By:	Checked By:
FC CUNY	FC CUNY
Date: 12-12	Project No.: 08-007

Sheet Title: Force Main Details

Scale:	Sheet No.:
N.T.S.	12 of 12