TABLE OF VARIABLE DIMENSIONS AND QUANTITIES FOR ONE HEADWALL

SLOPE	DIA OF PIPE, D	Values for one Pipe						Values to be added for each add't'l Pipe		
		W	X	Y	L	Reinf (Lbs)	Conc (CY) (1)	X and W	Reinf (Lbs)	Conc (CY) (1)
2:1	12"	4'- 7 1/2"	2'- 6"	2'-10"	3'- 3 1/4"	84	0.6	1'- 9"	20	0.2
	15"	5'- 5 3/4"	2'- 9 1/2"	3'- 4"	3'-10 1/4"	99	0.7	2'- 2"	24	0.3
	18"	6'- 4 1/4"	3'- 1"	3'-10"	4'- 5"	120	0.9	2'- 8"	32	0.3
	21"	7'- 2 3/4"	3'- 4 1/2"	4'- 4"	5'- 0"	137	1.1	3'- 1"	43	0.4
	24"	8'- 2 1/2"	3'- 9 1/2"	4'-10"	5'- 7"	158	1.3	3'- 7"	50	0.5
	27"	9'- 1"	4'- 1"	5'- 4"	6'- 2"	173	1.5	3'-11"	56	0.6
	30"	9'-11 1/2"	4'- 4 1/2"	5'-10"	6'- 8 3/4"	197	1.7	4'- 4"	65	0.8
	33"	10'-10"	4'- 8"	6'- 4"	7'- 3 3/4"	216	2.0	4'- 8"	71	0.9
	36"	11'- 8 1/4"	4'-11 1/2"	6'-10"	7'-10 3/4"	241	2.2	5'- 1"	81	1.0
	42"	13'- 5 1/4"	5'- 6 1/2"	7'-10"	9'- 0 1/2"	290	2.8	5'-10"	97	1.3
	48"	15'- 9"	6'- 1 1/2"	9'- 4"	10'- 9 1/4"	350	3.8	6'- 7"	117	1.7
	54"	17'- 5 3/4"	6'- 8 1/2"	10'- 4"	11'-11 1/4"	415	4.5	7'- 6"	151	2.1
	60"	19'- 2 3/4"	7'- 3 1/2"	11'- 4"	13'- 1"	469	5.3	8'- 3"	174	2.5
	66"	20'-11 1/2"	7'-10 1/2"	12'- 4"	14'- 3"	530	6.2	8'- 9"	194	2.9
	72"	22'- 8 1/2"	8'- 5 1/2"	13'- 4"	15'- 4 3/4"	587	7.1	9'- 4"	213	3.3
3:1	12"	6'- 3"	2'- 6"	4'- 3"	4'-11"	114	0.8	1'- 9"	22	0.2
	15"	7'- 5"	2'- 9 1/2"	5'- 0"	5'- 9 1/4"	133	1.1	2'- 2"	28	0.3
	18"	8'- 6 3/4"	3'- 1"	5'- 9"	6'- 7 3/4"	166	1.3	2'- 8"	37	0.5
	21"	9'- 8 3/4"	3'- 4 1/2"	6'- 6"	7'- 6"	189	1.6	3'- 1"	48	0.6
	24"	11'- 0"	3'- 9 1/2"	7'- 3"	8'- 4 1/2"	221	2.0	3'- 7"	58	0.7
	27"	12'- 2"	4'- 1"	8'- 0"	9'- 2 3/4"	245	2.3	3'-11"	67	0.8
	30"	13'- 4"	4'- 4 1/2"	8'- 9"	10'- 1 1/4"	287	2.7	4'- 4"	77	1.0
	33"	14'- 5 3/4"	4'- 8"	9'- 6"	10'-11 3/4"	310	3.1	4'- 8"	84	1.2
	36"	15'- 7 3/4"	4'-11 1/2"	10'- 3"	11'-10"	343	3.5	5'- 1"	96	1.4
	42"	17'-11 1/2"	5'- 6 1/2"	11'- 9"	13'- 6 3/4"	424	4.5	5'-10"	119	1.7
	48"	21'- 1 3/4"	6'- 1 1/2"	14'- 0"	16'- 2"	527	6.1	6'- 7"	146	2.3
	54"	23'- 5 1/2"	6'- 8 1/2"	15'- 6"	17'-10 3/4"	618	7.3	7'- 6"	186	2.9
	60"	25'- 9 1/4"	7'- 3 1/2"	17'- 0"	19'- 7 1/2"	707	8.7	8'- 3"	219	3.4
	66"	28'- 1"	7'-10 1/2"	18'- 6"	21'- 4 1/4"	797	10.1	8'- 9"	242	3.9
	72"	30'- 4 3/4"	8'- 5 1/2"	20'- 0"	23'- 1 1/4"	910	11.7	9'- 4"	272	4.4
4:1	12"	7'-10 3/4"	2'- 6"	5'- 8"	6'- 6 1/2"	144	1.1	1'- 9"	24	0.3
	15"	9'- 4"	2'- 9 1/2"	6'- 8"	7'- 8 1/2"	177	1.5	2'- 2"	32	0.4
	18"	10'- 9 1/2"	3'- 1"	7'- 8"	8'-10 1/4"	217	1.9	2'- 8"	42	0.5
	21"	12'- 2 3/4"	3'- 4 1/2"	8'- 8"	10'- 0"	254	2.3	3'- 1"	57	0.7
	24"	13'- 9 1/2"	3'- 9 1/2"	9'- 8"	11'- 2"	295	2.8	3'- 7"	67	0.9
	27"	15'- 3"	4'- 1"	10'- 8"	12'- 3 3/4"	328	3.3	3'-11"	77	1.0
	30"	16'- 8 1/4"	4'- 4 1/2"	11'- 8"	13'- 5 3/4"	379	3.8	4'- 4"	89	1.3
	33"	18'- 1 3/4"	4'- 8"	12'- 8"	14'- 7 1/2"	417	4.5	4'- 8"	101	1.4
	36"	19'- 7"	4'-11 1/2"	13'- 8"	15'- 9 1/4"	464	5.1	5'-1"	115	1.7
	42"	22'- 5 3/4"	5'- 6 1/2"	15'- 8"	18'- 1"	575	6.5	5'-10"	141	2.1
	48"	26'- 6 1/4"	6'- 1 1/2"	18'- 8"	21'- 6 3/4"	720	8.9	6'- 7"	175	2.8
	54"	29'- 5"	6'- 8 1/2"	20'- 8"	23'-10 1/4"	863	10.7	7'- 6"	226	3.6
	60"	32'- 3 3/4"	7'- 3 1/2"	22'- 8"	26'- 2"	984	12.7	8'- 3"	264	4.3
	66"	35'- 2 1/2"	7'-10 1/2"	24'- 8"	28'- 5 3/4"	1126	14.9	8'- 9"	300	4.9
	72"	38'- 1 1/4"	8'- 5 1/2"	26'- 8"	30'- 9 1/2"	1283	17.3	9'- 4"	334	5.6
6:1	12"	11'- 2"	2'- 6"	8'- 6"	9'- 9 3/4"	220	1.9	1'- 9"	28	0.4
	15"	13'- 2 1/4"	2'- 9 1/2"	10'- 0"	11'- 6 1/2"	264	2.5	2'- 2"	37	0.5
	18"	15'- 2 1/2"	3'- 1"	11'- 6"	13'- 3 1/4"	326	3.2	2'- 8"	50	0.7
	21"	17'- 2 3/4"	3'- 4 1/2"	13'- 0"	15'- 0 1/4"	381	3.9	3'- 1"	69	0.9
	24"	19'- 4 1/2"	3'- 9 1/2"	14'- 6"	16'- 9"	447	4.8	3'- 7"	80	1.2
	27"	21'- 4 3/4"	4'- 1"	16'- 0"	18'- 5 3/4"	506	5.7	3'-11"	96	1.4
	30"	23'- 5 1/4"	4'- 4 1/2"	17'- 6"	20'- 2 1/2"	587	6.7	4'- 4"	110	1.7
	33"	25'- 5 1/2"	4'- 8"	19'- 0"	21'-11 1/4"	667	7.8	4'- 8"	127	2.0
	36"	27'- 5 3/4"	4'-11 1/2"	20'- 6"	23'- 8"	727	9.0	5'- 1"	144	2.3
	42"	31'- 6 1/4"	5'- 6 1/2"	23'- 6"	27'- 1 1/2"	914	11.5	5'-10"	179	3.0
	48"	37'- 3 1/2"	6'- 1 1/2"	28'- 0"	32'- 4"	1181	15.9	6'- 7"	231	4.0
	54"	41'- 4 1/4"	6'- 8 1/2"	31'- 0"	35'- 9 1/2"	1412	19.2	7'- 6"	300	5.0
	60"	45'- 4 3/4"	7'- 3 1/2"	34'- 0"	39'- 3"	1619	22.9	8'- 3"	353	6.0

(1) Quantities increase slightly for metal pipe installations.

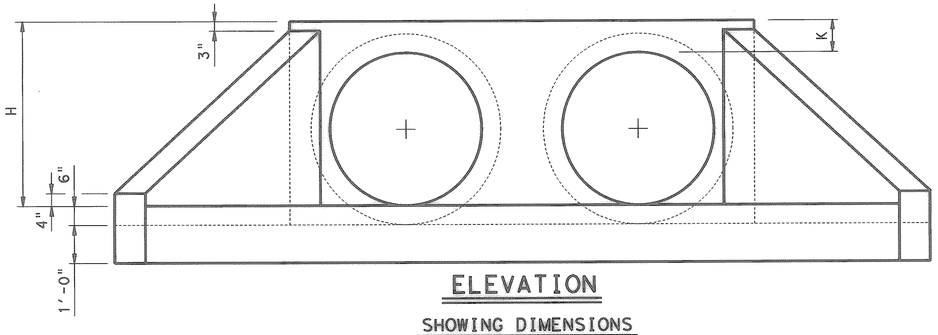

ELEVATION

SHOWING DIMENSIONS

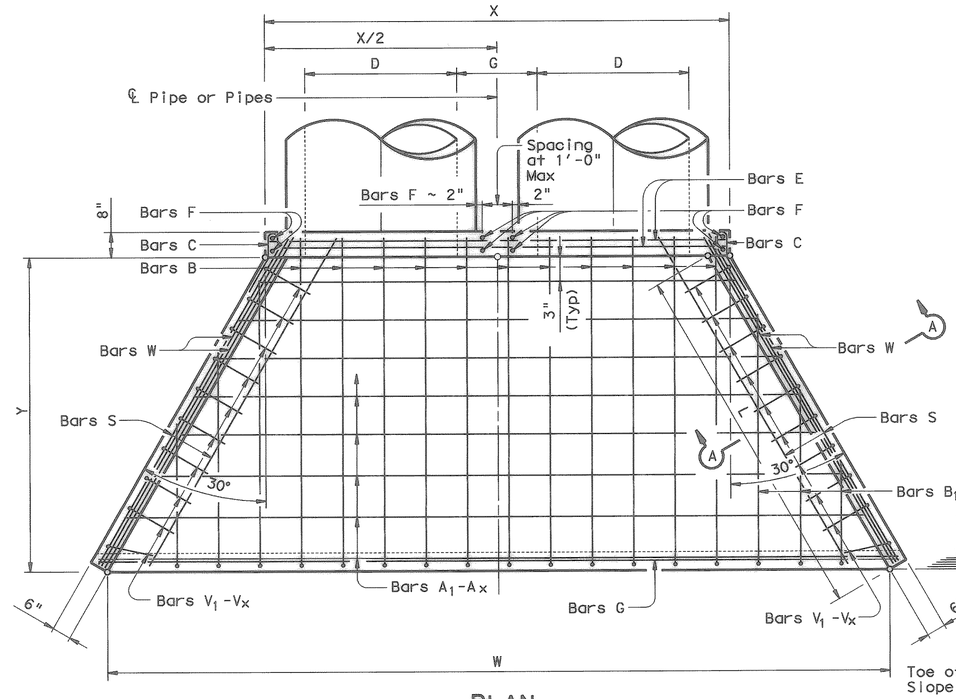

PLAN

(2) For vehicle safety, curb heights and wall heights shall be reduced, if necessary, to provide a maximum 3" projection above finished grade. No changes will be made in quantities and no additional compensation will be allowed for this work.

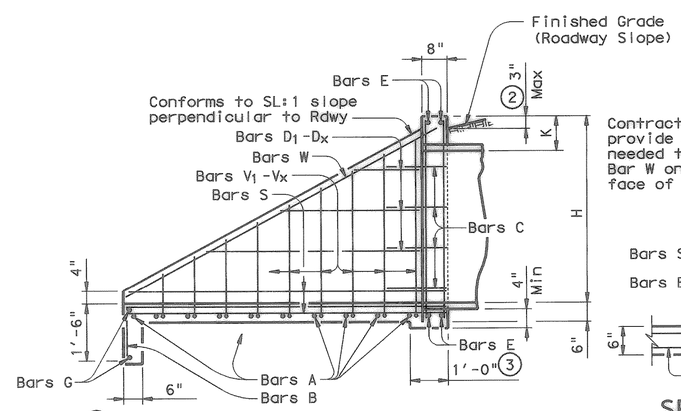

(3) Provide a 1'-0" footing as shown where required to maintain 4" Min cover for pipes.

TYPICAL WING ELEVATION

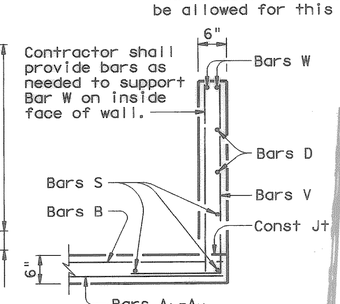

SECTION A-A

(4) TABLE OF REINFORCING STEEL

Bar	Size	Spa	No.
A	# 4	1'-0"	~
B	# 3	1'-6"	~
C	# 4	1'-0"	~
D	# 3	1'-0"	~
E	# 5	~	4
F	# 5	~	~
G	# 3	~	2
S	# 4	~	6
V	# 4	1'-0"	~
W	# 5	~	4

(4) Quantities shown are for one structure end. (One headwall)

TABLE OF CONSTANT DIMENSIONS

DIA OF PIPE, D	G	K	H
12"	9"	1'- 0"	2'- 0"
15"	11"	1'- 0"	2'- 3"
18"	1'- 2"	1'- 0"	2'- 6"
21"	1'- 4"	1'- 0"	2'- 9"
24"	1'- 7"	1'- 0"	3'- 0"
27"	1'- 8"	1'- 0"	3'- 3"
30"	1'-10"	1'- 0"	3'- 6"
33"	1'-11"	1'- 0"	3'- 9"
36"	2'- 1"	1'- 0"	4'- 0"
42"	2'- 4"	1'- 0"	4'- 6"
48"	2'- 7"	1'- 3"	5'- 3"
54"	3'- 0"	1'- 3"	5'- 9"
60"	3'- 3"	1'- 3"	6'- 3"
66"	3'- 3"	1'- 3"	6'- 9"
72"	3'- 4"	1'- 3"	7'- 3"

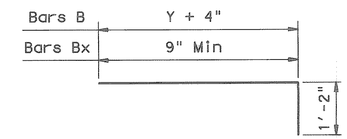

BARS B & B1-Bx

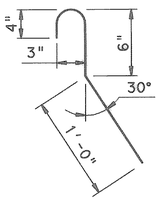

BARS C
(2'-0" long)

(5) Min Length = 6" + 3" x $\left(\frac{12 \times H - 7}{12 \times L}\right)$

Max Length = 12 x H - 3" x $\left(\frac{12 \times H - 7}{12 \times L}\right)$ - 1"

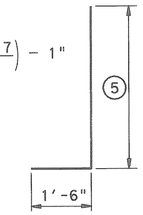

BARS V

GENERAL NOTES:

Designed according to current AASHTO Standard and Interim Specifications.

Reinforcing steel shall be placed with the center of the outside layer of bars 2" from the surface of the concrete.

All reinforcing steel shall be Grade 60.

All concrete shall be Class "C" and shall have a minimum 28 day compressive strength of 3600 psi.

DISCLAIMER:
The use of this standard is governed by the "Texas Engineering Practice Act". No warranty of any kind is made by TxDOT for any purpose whatsoever. TxDOT assumes no responsibility for the conversion of this standard to other formats or for incorrect results or damages resulting from its use.

ACC:

LEVELS DISPLAYED

1

RECORD DRAWINGS
These record drawings have been prepared using information provided by the Construction Contractor and/or Owner. The seal and signature below only signifies that the plans have been revised in accordance with the information provided and does not guarantee that these plans accurately show every detail of the constructed project.
Veronica Sims 4-2-02
Signature Date

Texas Department of Transportation
Bridge Division

CONCRETE HEADWALLS WITH FLARED WINGS FOR 0° SKEW PIPE CULVERTS

CH-FW-0

FILE: chfw00se.dgn	DN: GAF	CK: CAT	DW: BWH	CK: CAT
© TxDOT September 2000	DISTRICT	FEDERAL AID PROJECT		SHEET
REVISIONS				62
	COUNTY	CONTROL	SECT	JOB	HIGHWAY