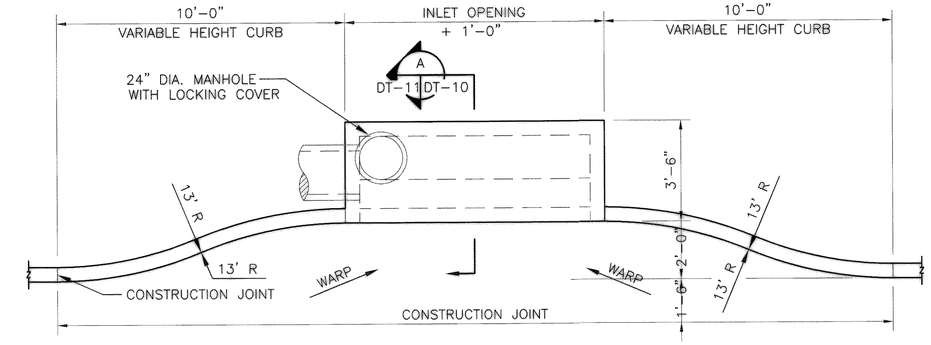

1 8' AND 10' RECESSED INLET

NOT TO SCALE

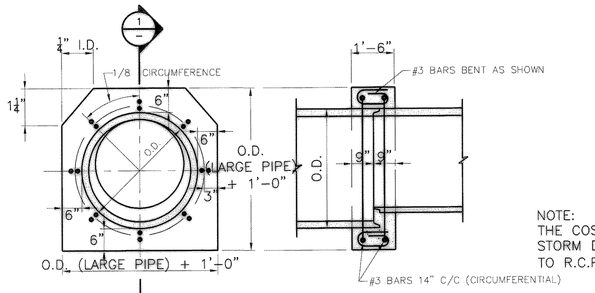

1 SECTION

NOT TO SCALE

NOTE:
THE COST FOR MATERIALS, INSTALLATION, ETC. STORM DRAIN COLLAR SHALL BE SUBSIDIARY TO R.C.P. (NO SEPARATE PAY).

This Record Drawing is a combination of the sealed engineering contract drawings for this project, modified by information furnished by the contractor, presumed correct, and noted in the Project made during construction. The original sealed drawings are on file at the offices of FREESE AND NICHOLS, INC.
4055 INTERNATIONAL PLAZA, SUITE 200
FORT WORTH, TEXAS 76109-4895
(817) 735-7300
RECORD DRAWINGS PREPARED ON: 3/16/2009

THE SEAL THAT ORIGINALLY APPEARED ON THIS DOCUMENT WAS PLACED ON THE DOCUMENT BY A REGISTERED PROFESSIONAL ENGINEER IN THE STATE OF TEXAS. ANY ALTERATION, REPRODUCTION OR PRINTING OF THIS DOCUMENT WITHOUT PROPER NOTIFICATION OF THE RESPONSIBLE ENGINEER IS AN ALTERATION OF A SEALED DOCUMENT AND MAY CONSTITUTE A VIOLATION OF THE TEXAS ENGINEERING PRACTICE ACT

Freese and Nichols
1701 N. Market Street, Suite 500, LB 51
Dallas, Texas 75202-2011
Phone – (214) 920-2500
Fax – (214) 920-2565

3 REINFORCED CONCRETE COLLAR DETAIL

NOT TO SCALE

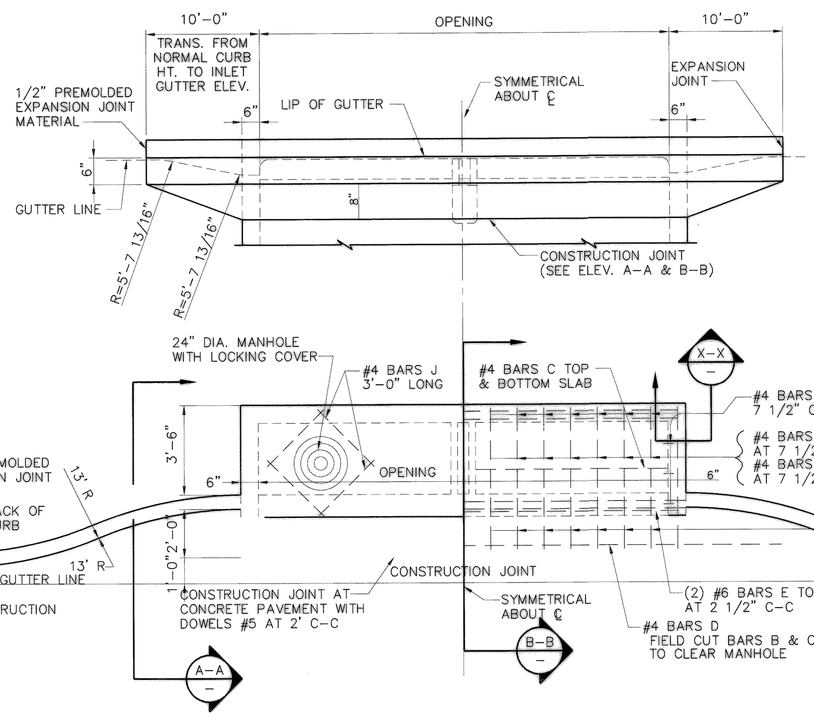

PLAN

NOTE:
LOCATION OF MANHOLE OPENING TO BE AT OUTFALL END, UNLESS OTHERWISE DIRECTED BY THE OWNER.

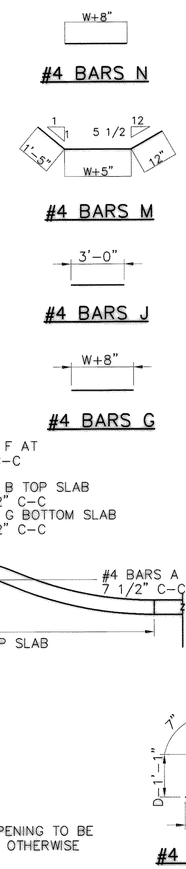

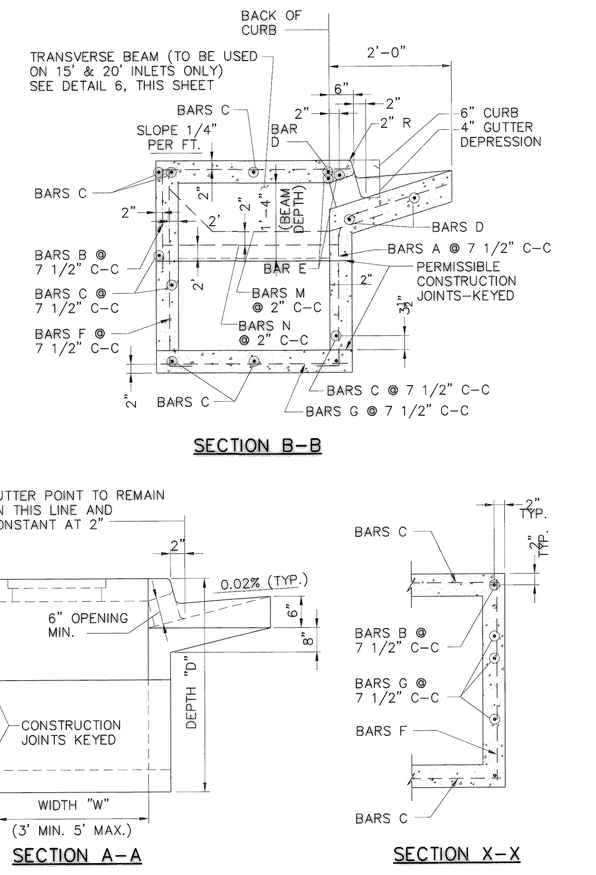

SECTION B-B

SECTION A-A

SECTION X-X

2 15' RECESSED INLET

NOT TO SCALE

GENERAL NOTES:

1. ALL CONCRETE SHALL BE CLASS "A" CONCRETE.
2. REINFORCING BARS SHALL BE STANDARD GRADE STEEL, DEFORMED REINFORCING BARS OF A DIAMETER AND LENGTH AS SHOWN.
3. CHAMFER ALL EXPOSED CORNERS 3/4" EXCEPT WHERE OTHERWISE NOTED.
4. DIMENSIONS RELATING TO REINFORCING STEEL ARE TO CENTERS OF BARS.
5. FIELD CUT AND BEND BARS AS NECESSARY TO ACCOMMODATE STORM SEWER PIPE.
6. RING AND COVER SHALL BE APPROVED BY THE OWNER AND INSTALLED BY THE CONTRACTOR.
6. OUTLET PIPE MAY BE LOCATED IN ANY WALL BUT SHALL NOT BE LOCATED AT ANY CORNER AT THE PILASTER.
7. MANHOLE RING WITH LOCKING COVER SHALL BE PLACED OVER THE OUTLET PIPE, REINFORCING BARS ARE TO BE ADJUSTED ACCORDINGLY.

CITY OF ROCKWALL, TEXAS
205 BYPASS CONSTRUCTION
CIVIL
STANDARD PAVING DETAILS

NO.	ISSUE	BY	DATE
	RECORD DRAWINGS	CJP	5/12/09

F&N JOB NO.	ROK06114
DATE	05/2007
DESIGNED	TBS
DRAWN	KAS
REVISED	
CHECKED	
FILE NAME	CV-RDS-DT-PAVE02.dwg

VERIFY SCALE 0 1 Bar is one inch on original drawing. If not one inch on this sheet, adjust scale.

SHEET DT-2
SEQ. 43 OF 86

ACAD Rel 17.0s (LMS Tech) User: CHM
[ROK06114][DALSRV2]N:\FI\DRAWINGS\CV-RDS-DT-PAVE03.DWG LAYOUT: Layout1
MAR 21, 2007 8:54:58 A.M. LTS: 1.00 PSLTS: 1 TWIST: 89.0, 0.0
3 REFERENCE FILES: ..\..\STANDARD\34BORDER, ..\BASE\CV-ALL-PL-SITE and 93682