BORDER, 335401GBDR1.DGN, 1-4,6,7,20-30,32,34-45,47-59,61,62
1/2 SCALE, 335401TGN01.DGN, 1,3-62
70, 1987BR70.DGN, 1-63
no ref logical, *no ref name*, *no ref levels*
no ref logical, *no ref name*, *no ref levels*
no ref logical, *no ref name*, *no ref levels*
no ref logical, *no ref name*, *no ref levels*
no ref logical, *no ref name*, *no ref levels*
no ref logical, *no ref name*, *no ref levels*
no ref logical, *no ref name*, *no ref levels*
no ref logical, *no ref name*, *no ref levels*

CODES AND REFERENCES

A. CONSTRUCTION SPECIFICATIONS: TEXAS STATE DEPARTMENT OF HIGHWAYS AND PUBLIC TRANSPORTATION 1993 STANDARD SPECIFICATIONS FOR HIGHWAYS, STREETS AND BRIDGES.

B. DESIGN SPECIFICATIONS: AMERICAN ASSOCIATION OF STATE HIGHWAY AND TRANSPORTATION OFFICIALS STANDARD SPECIFICATIONS FOR HIGHWAY BRIDGES, 2002 AND CURRENT INTERIM SPECIFICATIONS.

C. DESIGN LOADING: AASHTO HS 20-44.

D. GEOTECHNICAL REPORT: GEOTECHNICAL REPORT, NORTH LAKESHORE DRIVE BRIDGE IMPROVEMENTS, ROCKWALL, TEXAS, REPORT NO. DE 03-088 DATED SEPTEMBER 23, 2003 BY TERRA-MAR, INC., 11050 ABLES LANE, DALLAS, TEXAS 75229, (972) 488-8800.

E. HYDRAULIC REPORT FOR THE PRELIMINARY ALIGNMENT OF NORTH LAKESHORE DRIVE OVER SQUABBLE CREEK, DECEMBER 2003 BY HUITT-ZOLLARS, INC.

F. STANDARD DRAWINGS: TEXAS DEPARTMENT OF TRANSPORTATION

CONSTRUCTION

A. FALSEWORK SHALL BE DESIGNED FOR A MINIMUM 2.0 TIMES THE DEAD LOAD PLUS A 50 LB PER SQUARE FOOT CONSTRUCTION LOADING.

B. CHAMFER ALL EXPOSED CONCRETE EDGES ¾" UNLESS NOTED OTHERWISE.

C. CONSTRUCTION JOINTS, OTHER THAN THOSE SHOWN ON THE DRAWINGS, WILL NOT BE PERMITTED WITHOUT PRIOR APPROVAL OF THE ENGINEER.

BRIDGE ABUTMENTS AND WINGWALLS

A. SELECT FILL MATERIAL SHALL BE IN ACCORDANCE WITH:

MAXIMUM AGGREGATE SIZE	2.0 INCHES
PERCENT RETAINED ON #4 SIEVE	25-50
PERCENT RETAINED ON #40 SIEVE	50-75
PLASTICITY INDEX	5-15 PERCENT

B. SELECT GRANULAR FILL MATERIAL SHOULD BE UNIFORMLY COMPACTED TO AT LEAST 95 PERCENT OF THE 'STANDARD' MAXIMUM DRY DENSITY AND BE DRIER THAN +3 PERCENT OF OPTIMUM MOISTURE CONTENT AS DESCRIBED BY ASTM D698-92.

C. THE SELECT FILL AND EXCAVATION REQUIRED TO CONSTRUCT THE ABUTMENT CURTAIN WALLS AND EXTENDED WINGWALLS SHALL BE CONSIDERED SUBSIDIARY TO THE ABUTMENT CONCRETE PAY ITEM.

D. CONCRETE FINISH ON WINGWALLS AND ABUTMENT CURTAIN WALLS SHALL UTILIZE FORMLINER SUBMITTED TO THE CITY FOR APPROVAL PRIOR TO CONSTRUCTION.

E. ALL EXPOSED SURFACES ON THE BRIDGE INCLUDING CONCRETE WINGWALLS, ABUTMENT CURTAIN WALLS, TRAFFIC RAILS, BENTS, EDGE AND UNDERSIDE OF BRIDGE DECK TO EXTERIOR BEAMS, EXTERIOR BRIDGE BEAMS ON EACH SIDE OF THE ROAD AND ALL BRIDGE PIERS SHALL BE STAINED IN ACCORDANCE WITH MANUFACTURER'S SPECIFICATIONS WITH 'CANYON TONE STAIN' MANUFACTURED BY UNITED COATINGS, GREENACRES, WASHINGTON, 800-736-2047. CITY TO SELECT STAIN COLOR FROM SAMPLES PROVIDED BY THE CONTRACTOR.

DIMENSIONS AND TOLERANCES

A. DIMENSIONS SHALL NOT BE SCALED FROM DRAWINGS.

B. CONTRACTOR SHALL INFORM ENGINEER/OWNER OF ANY DISCREPANCIES OF DIMENSIONS ON THE DRAWINGS.

EXISTING AND PROPOSED UTILITIES

A. CONTRACTOR SHALL FIELD SURVEY AND VERIFY ALL EXISTING UTILITY LOCATIONS.

B. COORDINATE DRILLED SHAFT FOUNDATION LOCATIONS WITH EXISTING AND PROPOSED UTILITY LINES.

C. INFORM ENGINEER/OWNER OF ANY CONFLICTS IN BRIDGE FOUNDATION LAYOUT WITH EXISTING UTLITIES.

REINFORCING STEEL

A. ALL REINFORCING STEEL SHALL CONFORM TO ASTM SPECIFICATION A615, GRADE 60.

B. REINFORCING STEEL SHALL BE DETAILED IN ACCORDANCE WITH ACI MANUAL OF STANDARD PRACTICE UNLESS SUPERCEDED BY THE CONSTRUCTION SPECIFICATIONS.

C. REINFORCING BAR SPACING SHALL BE TO CENTER OF BAR UNLESS NOTED OTHERWISE.

D. BEND DIMENSIONS SHALL BE OUT TO OUT OF BEND UNLESS NOTED OTHERWISE.

E. ALL LAP SPLICES SHALL BE AASHTO CLASS C UNLESS NOTED OTHERWISE.

DRILLED SHAFT FOUNDATIONS

A. THE FOLLOWING PARAMETERS WERE USED TO DESIGN THE DRILLED SHAFTS:

- ALLOWABLE END BEARING OF 30,000 PSF
- ALLOWABLE SKIN FRICTION OF 4,500 PSF
- ALLOWABLE LATERAL LOAD OF 1,000 PSF

B. ALL DRILLED SHAFTS SHALL BE FOUNDED AT THE ELEVATIONS SHOWN ON THE BRIDGE PLAN AND PROFILE DRAWING OR DEEPER AS NECESSARY TO OBTAIN THE MINIMUM PENETRATIONS INTO THE DARK, GRAY SHALE.

C. BORING DATA PROVIDED IN THE GEOTECHNICAL INVESTIGATION IS FOR GENERAL INFORMATION ONLY AND DOES NOT GUARANTEE ACTUAL TYPES OF MATERIAL TO BE ENCOUNTERED.

D. AT THE CONTRACTOR'S OPTION, SHAFTS MAY BE FORMED FOR THE "H" HEIGHTS SHOWN. FORMED SECTION SHOULD BE FROM 1-FOOT MINIMUM BELOW FINISHED GROUND TO THE BOTTOM OF THE CAP.

E. TEMPORARY STEEL CASINGS MAY BE REQUIRED FOR THE DRILLED SHAFTS DUE TO THE PRESENCE OF GROUNDWATER AND CAVING SOILS DURING CONCRETE PLACEMENT. THE CASING SHALL BE SEATED IN THE BEARING STRATUM AND THEN ANY LOOSE MATERIAL AND WATER SHALL BE REMOVED PRIOR TO BEGINNING THE DRILLED SHAFT DESIGN PENETRATION. EXCAVATIONS SHALL BE FREE OF WATER AND LOOSE MATERIALS WHEN CONCRETE IS PLACED. CONCRETE INSTALLATION OF INDIVIDUAL SHAFTS SHALL BE IN A CONTINUOUS MANNER AND WITHIN AN EIGHT HOUR PERIOD. CONCRETE SHALL BE PLACED NO LATER THAN 1 TO 2 HOURS AFTER EXCAVATION IS COMPLETE.

F. EXCAVATION MATERIAL, EXCESSIVE CONCRETE, DRILLED SHAFT SHAVINGS, ETC. SHALL NOT BE DEPOSITED INTO THE STREAM OR CREEK BUT SHALL BE DISPOSED OF AS DIRECTED BY THE CITY.

PRESTRESSED CONCRETE BEAMS

A. REFER TO PRESTRESSED BEAM DRAWINGS FOR PRESTRESSED BEAM DETAILS AND NOTES.

⚠1 TRAFFIC RAIL

A. THE TRAFFIC RAIL TYPE T502 SHALL BE CONSTRUCTED WITH CAST-IN-PLACE WATER BARRIERS. THE TRAFFIC RAIL SHALL NOT HAVE SIDE SLOT DRAINS.

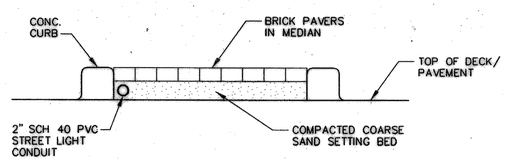

SECTION A-A
N.T.S.

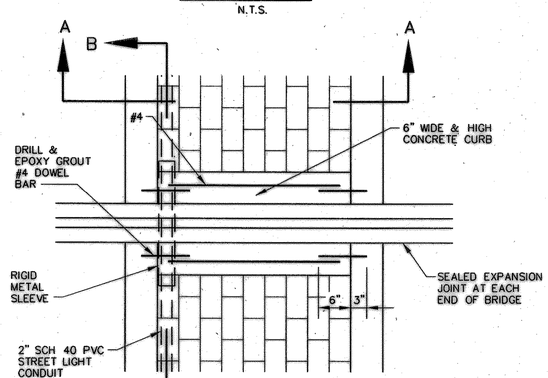

PARTIAL PLAN
N.T.S.

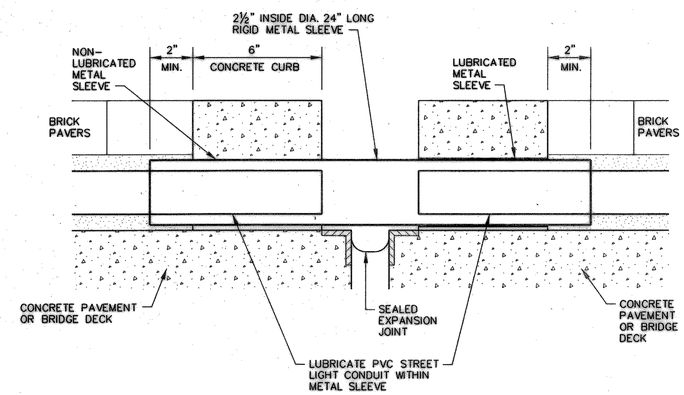

SECTION B-B
N.T.S.

RECORD DRAWINGS JANUARY 12, 2006
THIS RECORD DOCUMENT HAS BEEN PREPARED BASED ON INFORMATION PROVIDED BY OTHERS. THE CONSULTANT HAS NOT VERIFIED THE ACCURACY AND/OR COMPLETENESS OF THIS INFORMATION AND SHALL NOT BE RESPONSIBLE FOR ANY ERRORS OR OMISSIONS THAT MAY BE INCORPORATED AS A RESULT OF ERRONEOUS INFORMATION PROVIDED BY OTHERS.

THE SEAL APPEARING ON THIS DOCUMENT WAS AUTHORIZED BY CHARLES E. QUADE, P.E. 69396 ON AUGUST 31, 2004

STATE OF TEXAS
CHARLES E. QUADE
69396
LICENSED
PROFESSIONAL ENGINEER
8/31/2004

NO.	DATE	REVISIONS	APPROVED
1	9/13/2004	ADDENDUM NO. 1	

GENERAL NOTES & DETAILS

NORTH LAKESHORE DRIVE

NAPA DRIVE TO S.H. 205

HUITT-ZOLLARS
Huitt-Zollars, Inc. Dallas
3131 McKinney Avenue, Suite 600
Dallas, Texas 75204-2489
Phone (214) 871-3311 Fax (214) 871-0757

CITY OF ROCKWALL, TEXAS

DESIGN	DRAWN	APPR.	SCALE	DATE	PROJECT NO.	NO.
HZI	HZI	CEQ	AS SHOWN	AUGUST 2004	01-3354-01	B-3

theresa
SCALE=4.000010
PRF ROTATION=90.000000
f:\tbl\HZIFULL.TBL
h:\proj\01335401\dgn\335401TGN01.DGN
DATE: 1/10/2006
TIME: 09:37:31
h:\proj\01335401\dgn\335401TGN01 DGN