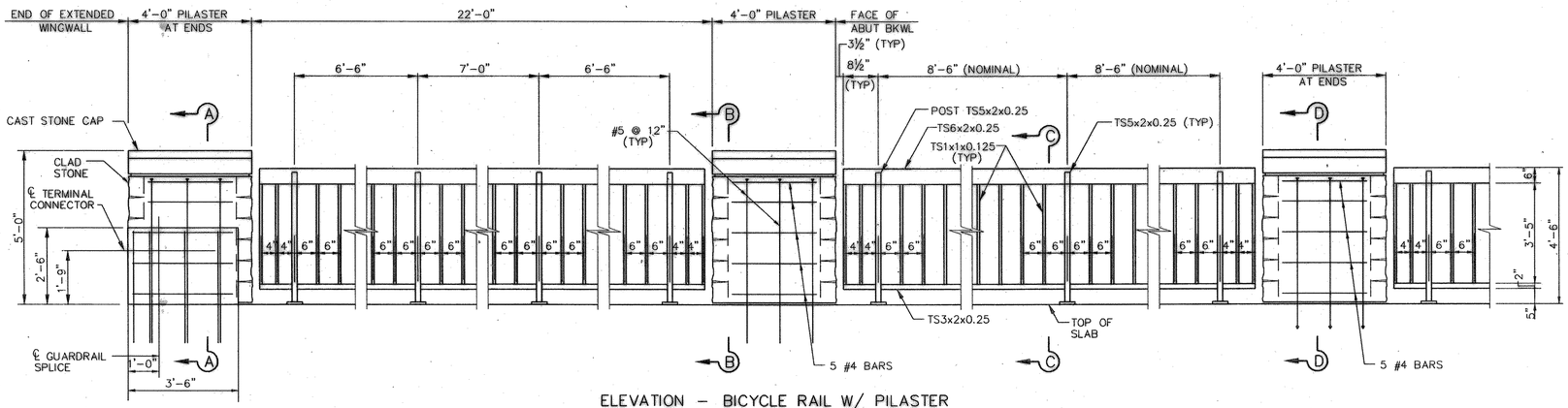

ELEVATION – BICYCLE RAIL W/ PILASTER

SCALE: ½"=1'-0"

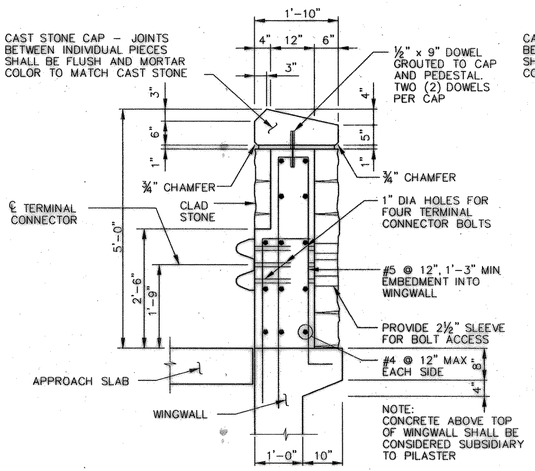

SECTION A–A

SCALE: ¾"=1'-0"

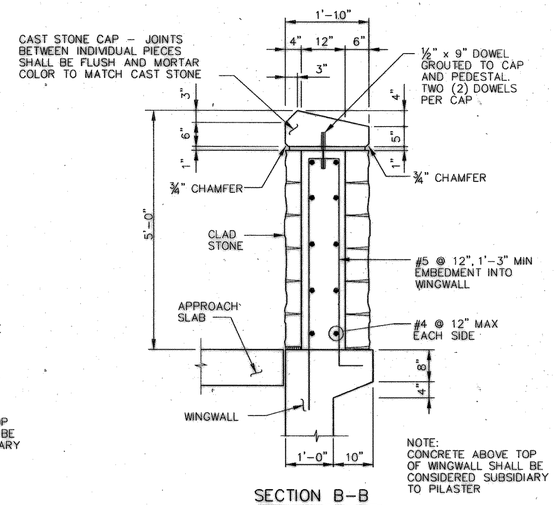

SECTION B–B

SCALE: ¾"=1'-0"

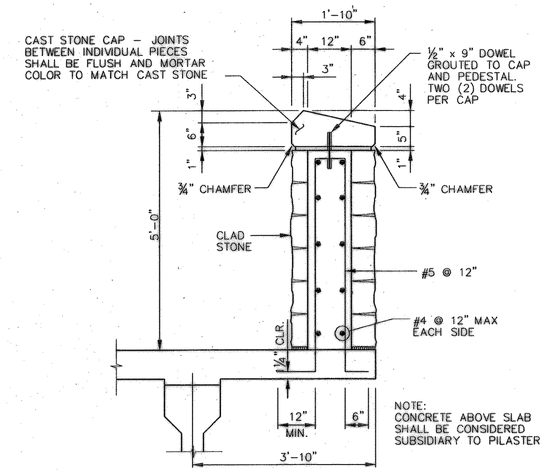

SECTION D–D

SCALE: ¾"=1'-0"

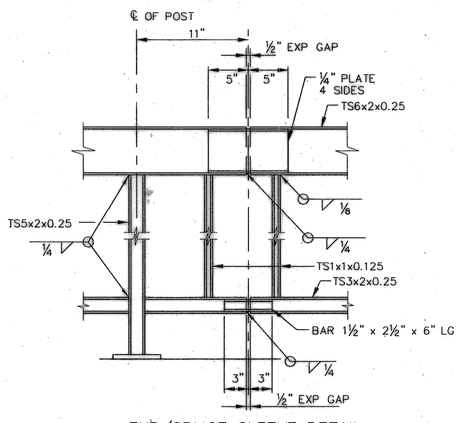

EXP/SPLICE SLEEVE DETAIL

SCALE: 1½"=1'-0"

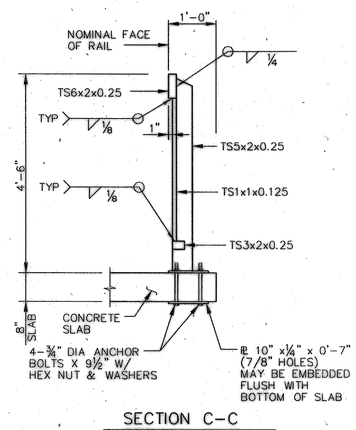

SECTION C–C

SCALE: ¾"=1'-0"

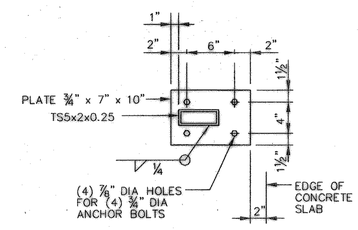

ANCHOR PLATE

SCALE: 1½"=1'-0"

NOTES:

1. DESIGNED ACCORDING TO A.A.S.H.T.O. 2002 STANDARD AND CURRENT INTERIUM SPECIFICATIONS.
2. RAIL TUBE SECTIONS SHALL BE IN ACCORDANCE WITH ASTM A500, GRADE B STEEL. BASE PLATE AND MILSAP SUPPORT ANGLE SHALL BE ASTM A36 STEEL.
3. WHERE INDICATED, GALVANIZING SHALL BE IN ACCORDANCE WITH ASTM A123.
4. ALL OPEN ENDS OF THE RAIL SHALL BE CAPPED.
5. DOVETAIL SLOTS SHALL BE 20 GUAGE, GALVANIZED. CODE NUMBER DAS-920 MANUFACTURED BY GATEWAY BUILDING PRODUCTS OR ENGINEER APPROVED EQUAL.
6. DOVETAIL STONE ANCHORS SHALL BE ¼" x 1¼" SPACED @ 1'-0" O.C. THE FULL LENGTH OF SLOT.
7. ALL JOINTS SHALL BE ¾" x 1" DEEP RANKED.
8. CAST STONE SHALL BE REINFORCED AS REQUIRED FOR SAFE HANDLING, SETTING AND STRUCTURAL STRESS. THE MINIMUM LENGTH OF CAP SHALL BE 2'-6". CAST STONE SHALL BE SUBSIDIARY TO PILASTER.
9. ANCHOR BOLTS AND NUTS SHALL BE ASTM A307.
10. ALL STEEL FOR BICYCLE RAIL SHALL HAVE RUST PROTECTIVE COATING AND PAINT. APPLIED BY FABRICATOR PRIOR TO DELIVERY TO SITE. COLOR SHALL BE APPROVED BY THE CITY PRIOR TO FABRICATION.
11. CONTRACTOR SHALL SUBMIT STONE SAMPLES TO THE CITY FOR COLOR SELECTION PRIOR TO CONSTRUCTION.
12. BICYCLE RAIL SHALL BE PERPENDICULAR TO TOP OF BRIDGE DECK. ERECTION DRAWINGS SHOWING PANEL LENGTHS AND POST SPACING SHALL BE SUBMITTED FOR APPROVAL.

RECORD DRAWINGS JANUARY 12, 2006
THIS RECORD DOCUMENT HAS BEEN PREPARED BASED ON INFORMATION PROVIDED BY OTHERS. THE CONSULTANT HAS NOT VERIFIED THE ACCURACY AND/OR COMPLETENESS OF THIS INFORMATION AND SHALL NOT BE RESPONSIBLE FOR ANY ERRORS OR OMISSIONS THAT MAY BE INCORPORATED AS A RESULT OF ERRONEOUS INFORMATION PROVIDED BY OTHERS.

THE SEAL APPEARING ON THIS DOCUMENT WAS AUTHORIZED BY CHARLES E. QUADE, P.E. 69396 ON AUGUST 31, 2004

STATE OF TEXAS
CHARLES E. QUADE
69396
PROFESSIONAL ENGINEER
8/31/2004

NO.	DATE	REVISIONS	APPROVED

BICYCLE RAIL W/ PILASTERS

NORTH LAKESHORE DRIVE

NAPA DRIVE TO S.H. 205

HUITT-ZOLLARS
Huitt-Zollars, Inc. Dallas
3131 McKinney Avenue, Suite 600
Dallas, Texas 75204-2489
Phone (214) 871-3311 Fax (214) 871-0757

CITY OF ROCKWALL, TEXAS

DESIGN	DRAWN	APPR.	SCALE	DATE	PROJECT NO.	NO.
HZI	HZI	CEQ	AS SHOWN	AUGUST 2004	01-3354-01	B-15

BORDER_335401GBDR1.DGN, 1-4,6,7,20-30,32,34-45,47-59,61,62
theressa
SCALE=3.000007
PRF ROTATION=90.000000
f:\tbl\HZIFULL.TBL
h:\proj\01335401\dgn\335401TRL01.DGN
DATE: 1/10/2006
TIME: 09:37:37
no ref logical, *no ref name*, *no ref levels*
h:\proj\01335401\dgn\335401TRL01.DGN