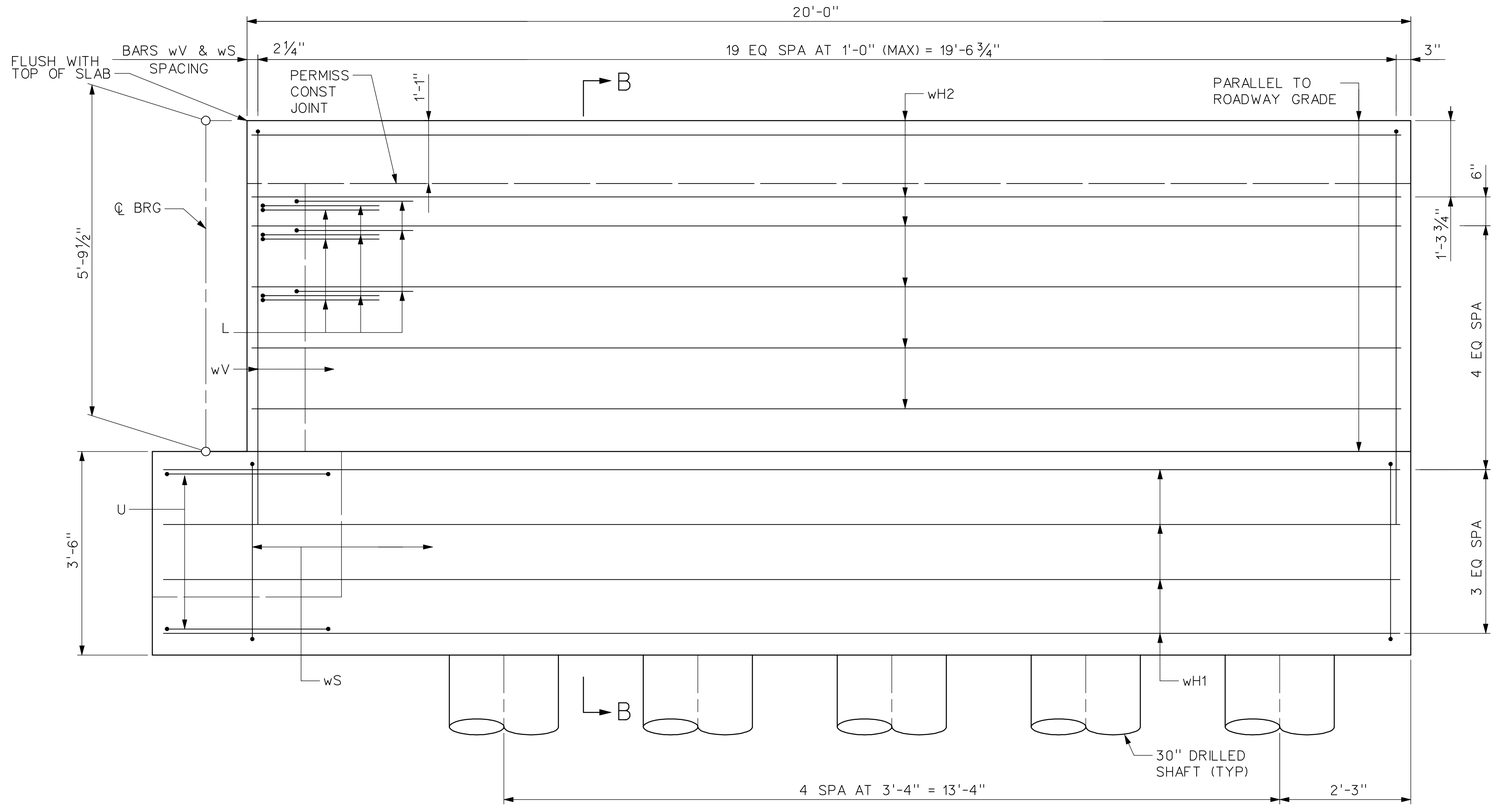

WINGWALL ELEVATION

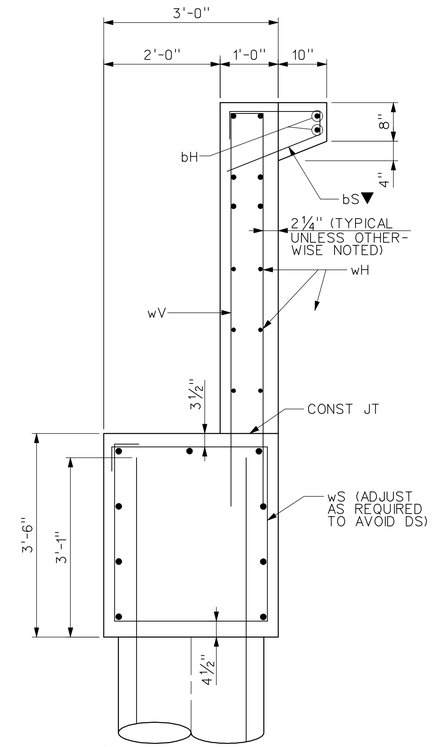

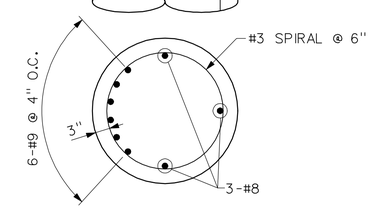

SECTION B-B

▼PLACE BAR bS AT EQ SPA

BILL OF REINFORCING STEEL ⓐ

	BAR	No	SIZE	LENGTH	WEIGHT
ⓑ	A	8	#11	52'-0"	2,210
ⓑ	H	10	#6	52'-0"	781
	L	9	6	4'-0"	54
	S	42	#5	10'-8"	467
	U	2	#5	7'-10"	16
	V	40	#5	13'-11"	581
	wH	7	#6	19'-0"	200
	wS	19	#5	11'-9"	233
	wV	19	#5	14'-2"	281
	bH	2	#4	3'-8"	5
	bS	5	#4	4'-1"	14
				TOTAL	4,842

ESTIMATED QUANTITIES

	ITEM	UNIT	QUANTITY
ⓑ	REINFORCING STEEL	LB	4,842
	CLASS C CONC (ABUT)	CY	36.3
	30" DIA DRILLED SHAFT	LF	105
	36" DIA DRILLED SHAFT	LF	144

ⓐ FOR CONTRACTOR INFORMATION ONLY

ⓑ BAR SHOWN TO ℄ 205 BYPASS. BAR EXTENDS TO ABUT 5 OF SOUTHBOUND 205 BYPASS BRIDGE AND INCLUDES 2 MECHANICAL SPLICES.

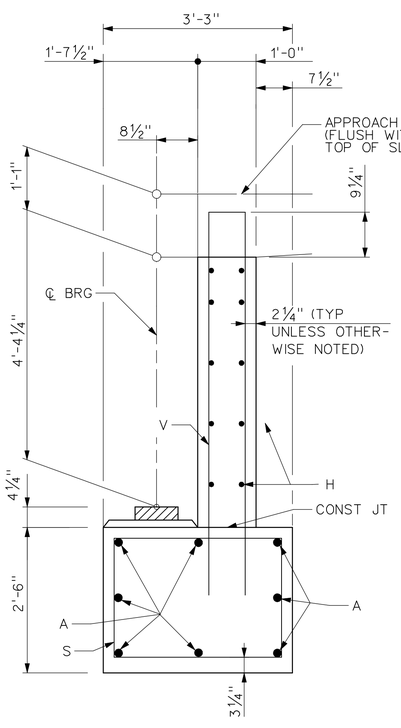

SECTION A-A

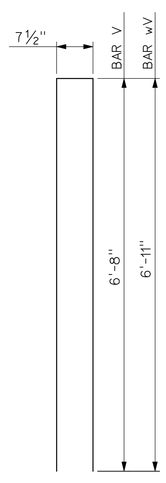

BARS V & wV

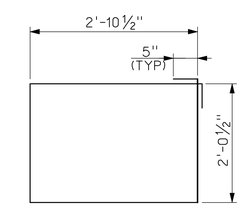

BARS S

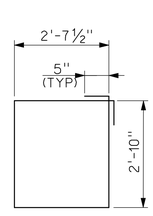

BARS wS

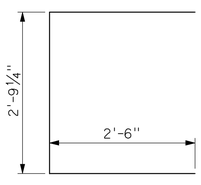

BARS U

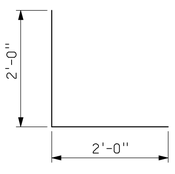

BARS L

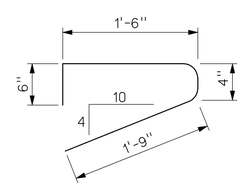

BARS bS

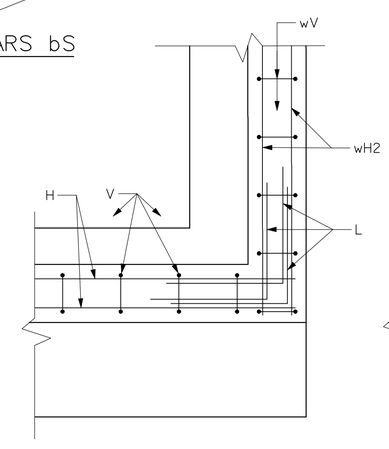

BACKWALL AND WINGWALL

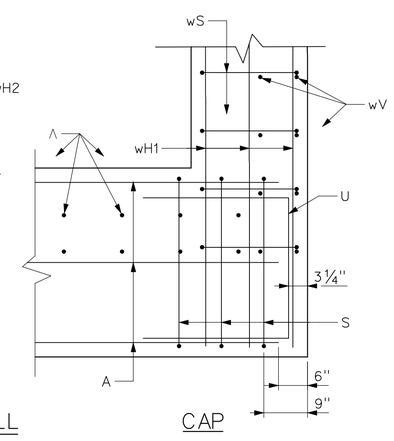

CAP

CORNER DETAILS

RECORD DRAWING

This drawing is a compilation of the original sealed engineering drawing and modifications by addenda, change orders and information furnished by the contractor. Information shown that was provided by the contractor and others not associated with the design engineer cannot be verified for accuracy or completeness. Original sealed drawing is on file at the office of AECOM USA Group, Inc., TBPE REG. NO. F-3082

ORIGINAL DRAWING SEALED & SIGNED BY

Wally R. Burns, P.E.

TX NO. 44162

HL93 LOADING

NO.	REVISION	BY	DATE

City of Rockwall, Texas

205 BYPASS
PHASE 4

NORTHBOUND 205 BYPASS BRIDGE OVER PHELPS CREEK ABUTMENT 5 DETAILS

1 OF 1

TCB | AECOM
TCB INC.
WWW.TCB.AECOM.COM
17300 DALLAS PARKWAY, SUITE 1010
DALLAS, TEXAS 75248

Unit	PW-DAL-FW	Scale:	NOT TO SCALE	Date	11/23/2009
Designed	SDH	Checked	TCB	Project No.	60004153
Drawn	TCB	Approved	TCB	Sheet	95 of 146

p:\4328\60004153-205bypass\cadd\sheets\phase 4-120+00 to 141+00\record drawing 10.7.09\095_205BP-BR-NB-K005b.dgn
11/23/2009