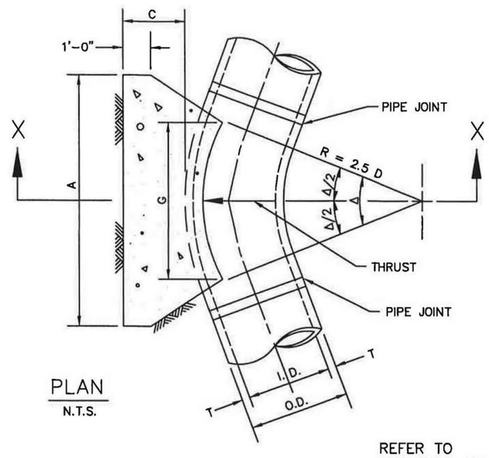

PLAN
N.T.S.

REFER TO
STD. DWG. No. 4040
FOR GENERAL NOTES.

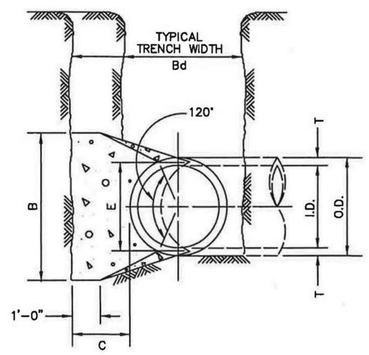

SECTION X–X
N.T.S.

HORIZONTAL THRUST BLOCK
AT PIPE BEND

North Central Texas Council of Governments

STANDARD SPECIFICATION REFERENCE
502.4

DATE
OCT. '04

STANDARD DRAWING NO.
4010A

I.D. (IN.)	T (IN.)	Δ = 11.25° C (FT.)	Δ = 22.50° C (FT.)	E (FT.)
4,6,8	0.4	1.5	1.5	0.9
10,12	0.5	1.5	1.5	1.2
16,18	0.6	1.5	1.5	1.6
20	0.7	1.5	1.5	1.8
24	0.9	1.5	1.5	2.1
30	2.9	1.5	1.9	2.6
36	4.5	1.5	2.3	3.3
42	5.0	1.8	2.6	3.8
48	5.5	2.0	3.0	4.3
54	6.0	2.3	3.4	4.8
60	6.5	2.5	3.8	5.3
66	6.8	2.8	4.1	5.7
72	7.5	3.0	4.5	6.3
78	7.5	3.3	4.9	6.7
84	8.0	3.5	5.3	7.2
90	8.5	3.8	5.6	7.7
96	9.0	4.0	6.0	8.2

I.D. (IN.)	Δ = 11.25°							I.D. (IN.)	Δ = 22.50°						
	G (FT.)	THRUST (TONS)	EARTH A (FT.)	EARTH B (FT.)	EARTH VOL. (C.Y.)	ROCK A (FT.)	ROCK B (FT.)	ROCK VOL. (C.Y.)		G (FT.)	THRUST (TONS)	EARTH A (FT.)	EARTH B (FT.)	EARTH VOL. (C.Y.)	ROCK A (FT.)	ROCK B (FT.)	ROCK VOL. (C.Y.)
4,6,8	0.4	1.0	1.0	1.5	0.1	1.0	1.0	0.1	4,6,8	0.8	2.0	1.5	1.5	0.1	1.0	1.0	0.1
10,12	0.6	2.2	1.5	1.5	0.1	1.0	1.5	0.1	10,12	1.1	4.4	2.0	2.5	0.3	1.5	1.5	0.1
16,18	0.8	5.0	2.0	2.5	0.3	1.5	2.0	0.2	16,18	1.6	9.9	3.0	3.5	0.6	2.0	2.5	0.3
20	0.9	6.2	2.0	3.5	0.4	1.5	3.0	0.3	20	1.8	12.3	3.5	3.5	0.7	2.0	3.0	0.4
24	1.1	8.9	3.0	3.5	0.5	1.5	3.0	0.3	24	2.2	17.7	4.0	4.5	1.0	3.0	3.5	0.5
30	1.4	10.4	3.0	3.5	0.6	2.0	3.5	0.4	30	2.7	20.7	5.0	4.5	1.5	3.0	4.0	0.8
36	1.7	15.0	3.5	4.5	0.9	2.0	4.0	0.5	36	3.3	29.8	5.5	5.5	2.3	4.0	4.0	1.3
42	1.9	20.4	4.5	5.0	1.5	2.5	5.0	0.8	42	3.8	40.5	7.0	6.0	3.9	4.5	5.0	2.1
48	2.2	26.6	4.5	6.0	2.0	2.5	6.0	1.1	48	4.4	52.9	8.0	7.0	5.7	4.5	6.0	2.8
54	2.5	33.7	6.0	6.0	3.0	3.0	6.0	1.4	54	4.9	67.0	9.0	8.0	8.0	6.0	6.0	4.1
60	2.7	41.6	6.0	7.0	3.8	3.0	7.0	1.8	60	5.5	82.7	9.5	9.0	10.6	6.0	7.0	5.3
66	3.0	50.3	6.5	8.0	5.1	3.5	8.0	2.7	66	6.0	100.1	10.5	10.0	14.1	6.5	8.0	7.2
72	3.3	59.9	7.5	8.0	6.3	4.0	8.0	3.3	72	6.6	119.1	11.0	11.0	17.6	7.5	8.0	9.1
78	3.6	70.2	8.0	9.0	8.1	4.0	9.0	3.9	78	7.1	139.8	12.0	12.0	22.5	8.0	9.0	11.7
84	3.8	81.5	8.5	10.0	10.3	4.5	10.0	5.3	84	7.6	162.1	13.0	12.5	27.2	8.5	10.0	14.8
90	4.1	93.5	9.5	10.0	12.2	5.0	10.0	6.3	90	8.2	186.1	14.0	13.5	33.7	9.5	10.0	17.7
96	4.4	106.4	10.0	11.0	15.0	5.0	11.0	7.4	96	8.7	211.7	15.0	14.5	41.2	10.0	11.0	21.8

TABLES OF DIMENSIONS AND QUANTITIES

HORIZONTAL THRUST BLOCK
AT PIPE BEND

North Central Texas Council of Governments

STANDARD SPECIFICATION REFERENCE
502.4

DATE
OCT. '04

STANDARD DRAWING NO.
4010B

I.D. (IN.)	Δ = 30°								I.D. (IN.)	Δ = 45°							
	G (FT.)	THRUST (TONS)	EARTH A (FT.)	EARTH B (FT.)	EARTH VOL. (C.Y.)	ROCK A (FT.)	ROCK B (FT.)	ROCK VOL. (C.Y.)		G (FT.)	THRUST (TONS)	EARTH A (FT.)	EARTH B (FT.)	EARTH VOL. (C.Y.)	ROCK A (FT.)	ROCK B (FT.)	ROCK VOL. (C.Y.)
4,6,8	1.0	2.6	2.0	1.5	0.2	1.0	1.5	0.1	4,6,8	1.5	3.9	2.0	2.0	0.2	1.5	1.5	0.1
10,12	1.5	5.9	2.5	2.5	0.3	2.0	1.5	0.2	10,12	2.2	8.7	3.5	2.5	0.5	2.0	2.5	0.3
16,18	2.2	13.2	3.5	4.0	0.8	2.5	3.0	0.4	16,18	3.2	19.5	4.5	4.5	1.2	3.0	3.5	0.6
20	2.4	16.3	4.5	4.0	1.0	3.0	3.0	0.5	20	3.6	24.1	5.5	4.5	1.5	3.5	3.5	0.7
24	2.9	23.4	6.0	4.0	1.4	3.5	3.5	0.7	24	4.3	34.6	8.0	4.5	2.3	4.5	4.0	1.1
30	3.6	27.5	6.5	5.0	1.9	3.5	4.0	0.9	30	5.4	40.6	8.5	5.0	3.2	5.5	4.0	1.6
36	4.4	39.5	7.0	6.0	3.4	4.5	4.5	1.6	36	6.5	58.5	10.0	6.0	5.3	6.5	4.5	2.6
42	5.1	53.8	8.0	7.0	5.1	5.5	5.0	2.5	42	7.5	79.6	11.5	7.0	8.1	8.0	5.0	4.2
48	5.8	70.3	9.0	8.0	7.4	6.0	6.0	3.7	48	8.6	104.0	13.0	8.0	11.9	9.0	6.0	6.3
54	6.5	89.0	10.0	9.0	10.3	7.0	6.5	5.3	54	9.7	131.5	15.0	9.0	17.1	10.5	6.5	8.9
60	7.3	110.0	11.0	10.0	13.9	7.5	7.5	7.3	60	10.7	162.4	16.5	10.0	23.1	11.0	7.5	12.0
66	8.0	132.9	12.5	11.0	18.9	8.5	8.0	9.6	66	11.8	196.5	18.0	11.0	30.1	12.0	8.5	16.2
72	8.7	158.2	13.5	12.0	24.0	9.0	9.0	12.3	72	12.9	233.9	19.5	12.0	38.6	14.0	8.5	20.7
78	9.4	185.6	14.5	13.0	30.0	10.0	9.5	15.6	78	13.9	274.5	21.5	13.0	49.8	14.5	9.5	25.9
84	10.1	215.3	15.5	14.0	37.1	10.5	10.5	19.5	84	15.0	318.4	23.0	14.0	61.2	15.5	10.5	32.6
90	10.9	247.1	16.5	15.0	45.0	11.5	11.0	23.9	90	16.1	365.5	24.5	15.0	74.5	17.5	10.5	39.6
96	11.6	281.2	18.0	16.0	55.5	12.5	11.5	28.9	96	17.1	415.6	26.0	16.0	89.5	18.5	11.5	48.5

I.D. (IN.)	Δ = 67.50°								I.D. (IN.)	Δ = 90°							
	G (FT.)	THRUST (TONS)	EARTH A (FT.)	EARTH B (FT.)	EARTH VOL. (C.Y.)	ROCK A (FT.)	ROCK B (FT.)	ROCK VOL. (C.Y.)		G (FT.)	THRUST (TONS)	EARTH A (FT.)	EARTH B (FT.)	EARTH VOL. (C.Y.)	ROCK A (FT.)	ROCK B (FT.)	ROCK VOL. (C.Y.)
4,6,8	2.1	5.6	3.0	2.0	0.3	2.0	1.5	0.2	4,6,8	2.7	7.1	5.0	1.5	0.4	2.0	2.0	0.2
10,12	3.1	12.6	5.5	2.5	0.8	3.5	2.0	0.4	10,12	4.0	16.0	6.5	2.5	1.0	3.5	2.5	0.5
16,18	4.7	28.3	7.5	4.0	1.9	5.5	3.0	0.9	16,18	6.0	36.0	9.0	4.0	2.4	4.5	4.0	1.0
20	5.2	34.9	9.0	4.0	2.3	5.5	3.5	1.2	20	6.6	44.4	10.0	4.5	3.1	6.0	4.0	1.5
24	6.2	50.3	11.5	4.5	3.5	6.5	4.0	1.6	24	7.9	64.0	14.5	4.5	5.0	8.0	4.0	2.1
30	7.8	58.9	12.0	5.0	4.8	7.5	4.0	2.2	30	9.9	75.0	15.0	5.0	6.7	10.0	4.0	3.3
36	9.4	84.9	14.5	6.0	8.2	9.5	4.5	3.8	36	11.9	108.0	18.0	6.0	11.4	12.0	4.5	5.3
42	10.9	115.5	17.0	7.0	12.8	11.0	5.5	6.3	42	13.9	147.0	21.0	7.0	17.8	14.0	5.5	8.7
48	12.5	150.9	19.0	8.0	18.4	13.0	6.0	9.2	48	15.9	192.0	24.0	8.0	26.2	16.0	6.0	12.4
54	14.0	191.0	21.5	9.0	26.0	15.0	6.5	12.9	54	17.9	243.0	27.0	9.0	36.9	18.0	7.0	18.1
60	15.6	235.8	24.0	10.0	35.6	16.0	7.5	17.6	60	19.9	299.8	30.0	10.0	50.3	20.0	7.5	24.0
66	17.1	285.3	26.0	11.0	46.0	18.0	8.0	23.0	66	21.8	362.8	33.0	11.0	66.2	22.0	8.5	32.5
72	18.7	339.5	28.5	12.0	57.8	19.0	9.0	28.4	72	23.8	431.8	36.0	12.0	85.6	24.0	9.0	41.0
78	20.2	398.5	31.0	13.0	75.7	21.0	9.5	37.4	78	25.7	506.7	39.0	13.0	108.2	26.0	10.0	53.2
84	21.8	462.1	33.5	14.0	94.7	22.0	10.5	46.5	84	27.7	587.7	42.0	14.0	134.4	28.0	10.5	64.8
90	23.3	530.5	35.5	15.0	114.4	24.5	11.0	58.2	90	29.0	674.6	45.0	15.0	164.9	30.0	11.5	81.2
96	24.9	603.6	38.0	16.0	138.9	25.5	12.0	70.0	96	31.6	767.5	48.0	16.0	199.0	32.0	12.0	95.1

TABLES OF DIMENSIONS AND QUANTITIES

HORIZONTAL THRUST BLOCK
AT PIPE BEND

North Central Texas Council of Governments

STANDARD SPECIFICATION REFERENCE
502.4

DATE
OCT. '04

STANDARD DRAWING NO.
4010C

no.	revision	by	date

teague nall and perkins, inc
825 Watters Creek Blvd., Suite M300
Allen, Texas 75013
214.461.9867 ph 214.461.9864 fx
www.tnpinc.com
TBPE: F-230; TBPLS: 10011600, 10011601, 10194381

City of Rockwall
The New Horizon

scale
when bar is 1 inch long
horiz N/A
vert N/A
SEP 2019

tnp

RECORD DOCUMENTS

THESE PLANS ARE FOR THE OWNER'S USE AS RECORD SET OF THE CONSTRUCTED PROJECT, AND REFLECT REVISIONS AND CONSTRUCTION RELATED CHANGES AS RECORDED BY THE CONTRACTOR. CHANGES MADE FROM THE ORIGINAL CONSTRUCTION DOCUMENTS DO NOT DEPICT ENGINEERING AND ARE NOT THE RESPONSIBILITY OF TEAGUE NALL & PERKINS, INC. OR THE ENGINEER OF RECORD ON THE ORIGINAL DOCUMENTS. ORIGINAL PLANS RELEASED FOR CONSTRUCTION WERE SEALED BY GYANENDRA POKHREL, P.E. NO. 118159 ON 09/28/2018.

CITY OF ROCKWALL, TEXAS

HIGHLAND DRIVE RECONSTRUCTION, PHASE I
(DRIFTWOOD STREET TO BEDFORD FALLS LANE)

WATER DETAILS 1 OF 5

tnp project
RWL18219

sheet
17

Drawing: P:\PROJECTS\RWL18219\CAD\Sheets\PHASE 1 - NORTH\18 WATER DETAILS 5 OF 5.dwg at Sep 27, 2019-10:35am by jpokolle
Layout: 17 WATER DETAILS 4 OF 5 Xrefs: xref-border.dwg