CURB INLET PROTECTION

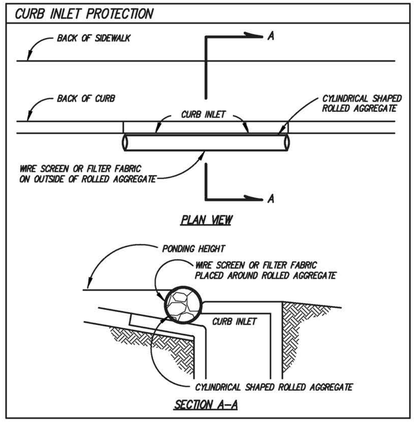

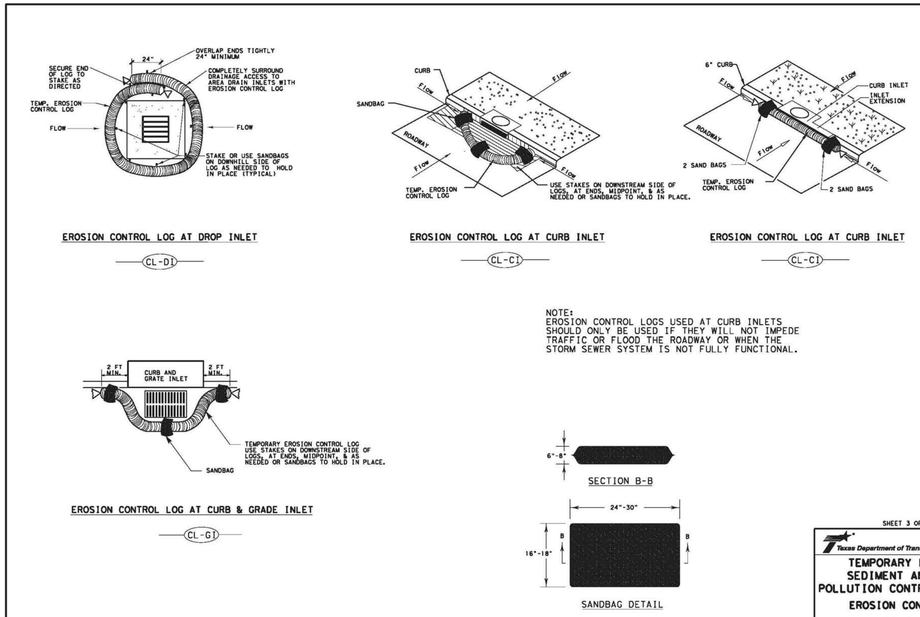

NOTE:
EROSION CONTROL LOGS USED AT CURB INLETS SHOULD ONLY BE USED IF THEY WILL NOT IMPEDE TRAFFIC OR FLOOD THE ROADWAY OR WHEN THE STORM SEWER SYSTEM IS NOT FULLY FUNCTIONAL.

SHEET 3 OF 3

Texas Department of Transportation | Design Division Standard

TEMPORARY EROSION, SEDIMENT AND WATER POLLUTION CONTROL MEASURES

EROSION CONTROL LOG

EC(9)-16

FILE: ec9516	DN: TxDOT	CK: KM	DW: LS/PT	CK: LS
©TxDOT: JULY 2016 REVISIONS	CONT	SECT	JOB	HIGHWAY
	DIST		COUNTY	SHEET NO.

Drawing: P:\PROJECTS\RWL18219\CAD\Sheets\PHASE 1 - NORTH\9 EROSION DETAILS 2 OF 2.dwg at Sep 27, 2019-10:34am by jbekolle
Layout: 9 EROSION DETAILS 2 OF 2 Xrefs: xref-border.dwg

no.	revision	by	date

teague nall and perkins, inc
825 Watters Creek Blvd., Suite M300
Allen, Texas 75013
214.461.9867 ph 214.461.9864 fx
www.tnpinc.com
TBPE: F-230; TBPLS: 10011600, 10011601, 10194381

City of Rockwall
The New Horizon

scale
when bar is 1 inch long
horiz N/A
vert N/A
SEP 2019

tnp

RECORD DOCUMENTS

THESE PLANS ARE FOR THE OWNER'S USE AS RECORD SET OF THE CONSTRUCTED PROJECT, AND REFLECT REVISIONS AND CONSTRUCTION RELATED CHANGES AS RECORDED BY THE CONTRACTOR. CHANGES MADE FROM THE ORIGINAL CONSTRUCTION DOCUMENTS DO NOT DEPICT ENGINEERING AND ARE NOT THE RESPONSIBILITY OF TEAGUE NALL & PERKINS, INC. OR THE ENGINEER OF RECORD ON THE ORIGINAL DOCUMENTS. ORIGINAL PLANS RELEASED FOR CONSTRUCTION WERE SEALED BY GYANENDRA POKHREL, P.E. NO. 118159 ON 09/28/2018.

CITY OF ROCKWALL, TEXAS

HIGHLAND DRIVE RECONSTRUCTION, PHASE I
(DRIFTWOOD STREET TO BEDFORD FALLS LANE)

EROSION DETAILS 2 OF 2

tnp project
RWL18219
sheet
12