DISCLAIMER:
The use of this standard is governed by the "Texas Engineering Practice Act". No warranty of any kind is made by TxDOT for any purpose whatsoever. TxDOT assumes no responsibility for the conversion of this standard to other formats or for incorrect results or damages resulting from its use.

1. May be changed as directed by the Engineer.
2. D equals the maximum inside diameter of any pipe entering the wall shown or the opposite wall.
3. D equals the maximum inside diameter of any pipe entering the inlet.

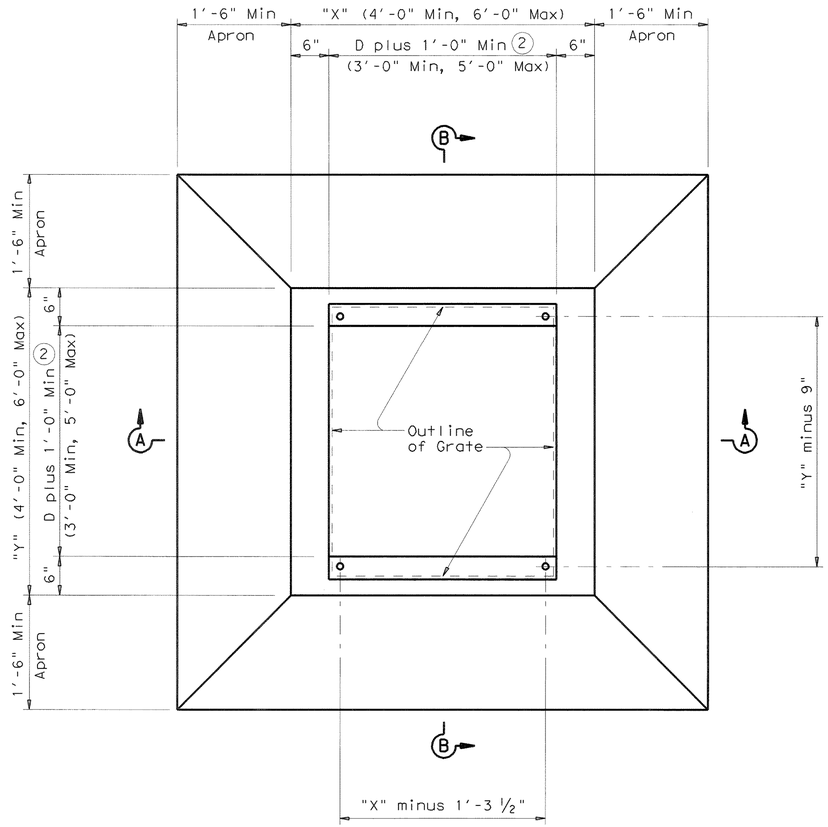

PLAN

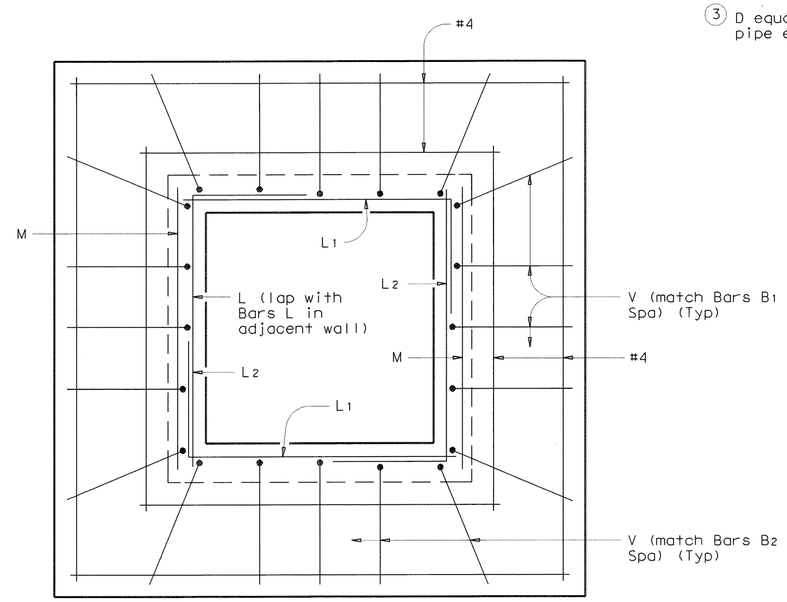

TYPICAL APRON PLAN

(Showing reinforcing in walls and in apron)

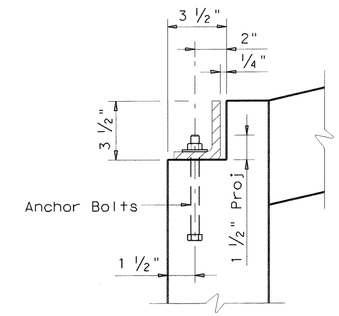

GRATE MOUNTING DETAIL

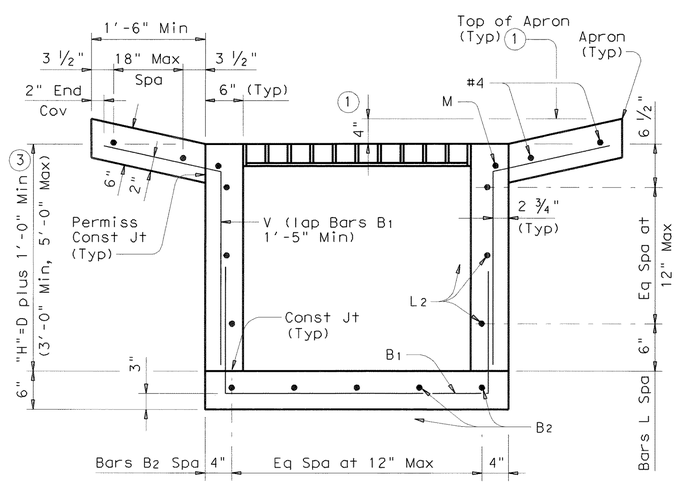

SECTION A-A

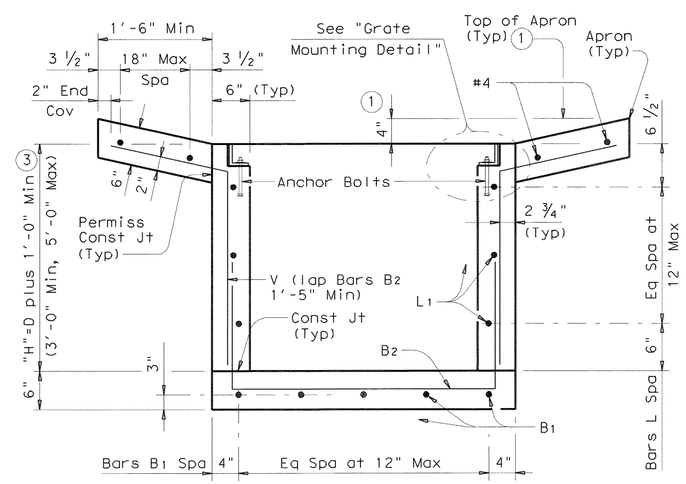

SECTION B-B

℄ 1/2" Dia x 6" Hex Head Anchor Bolt (ASTM-A307) or Threaded Rod (ASTM-A36) with one Plain Steel Washer placed under Hex Nut. One additional Hex Nut shall be furnished for each Threaded Rod.

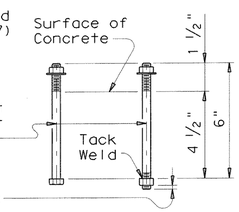

ANCHOR BOLT OPTIONS

SHEET 1 OF 2

Texas Department of Transportation
Bridge Division

HORIZONTAL INLET TYPE H WITH GRATE (MAX 48" DIA PIPES)

IL-H-G

FILE: ilhste01.dgn	DN: TxDOT	CK: TxDOT	DW: TxDOT	CK: TxDOT
© TxDOT February 2010	DISTRICT	FEDERAL AID PROJECT		SHEET
REVISIONS	COUNTY	CONTROL	SECT	JOB	HIGHWAY

PATH:
LEVELS DISPLAYED
1