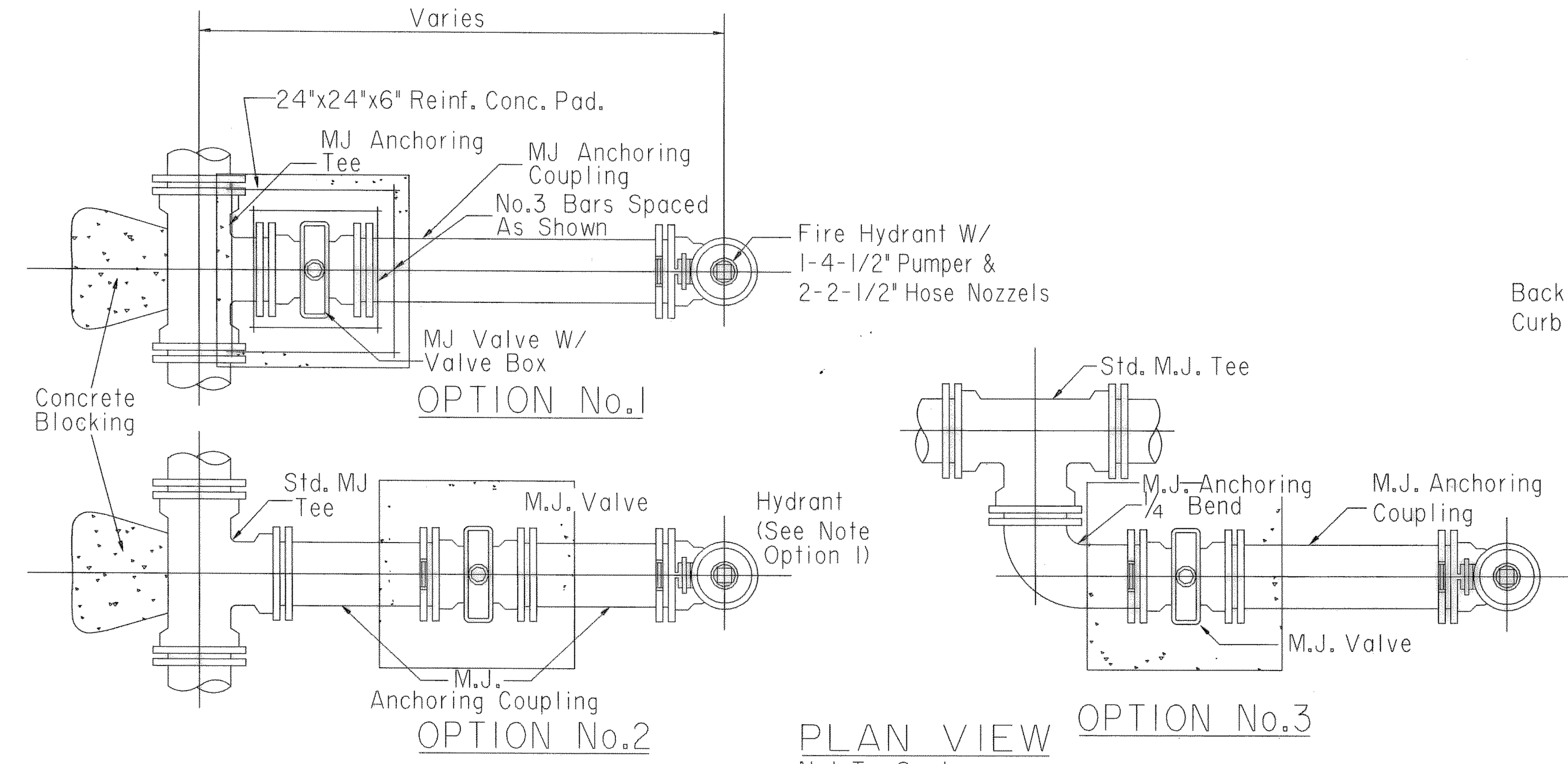

PLAN VIEW

Not To Scale

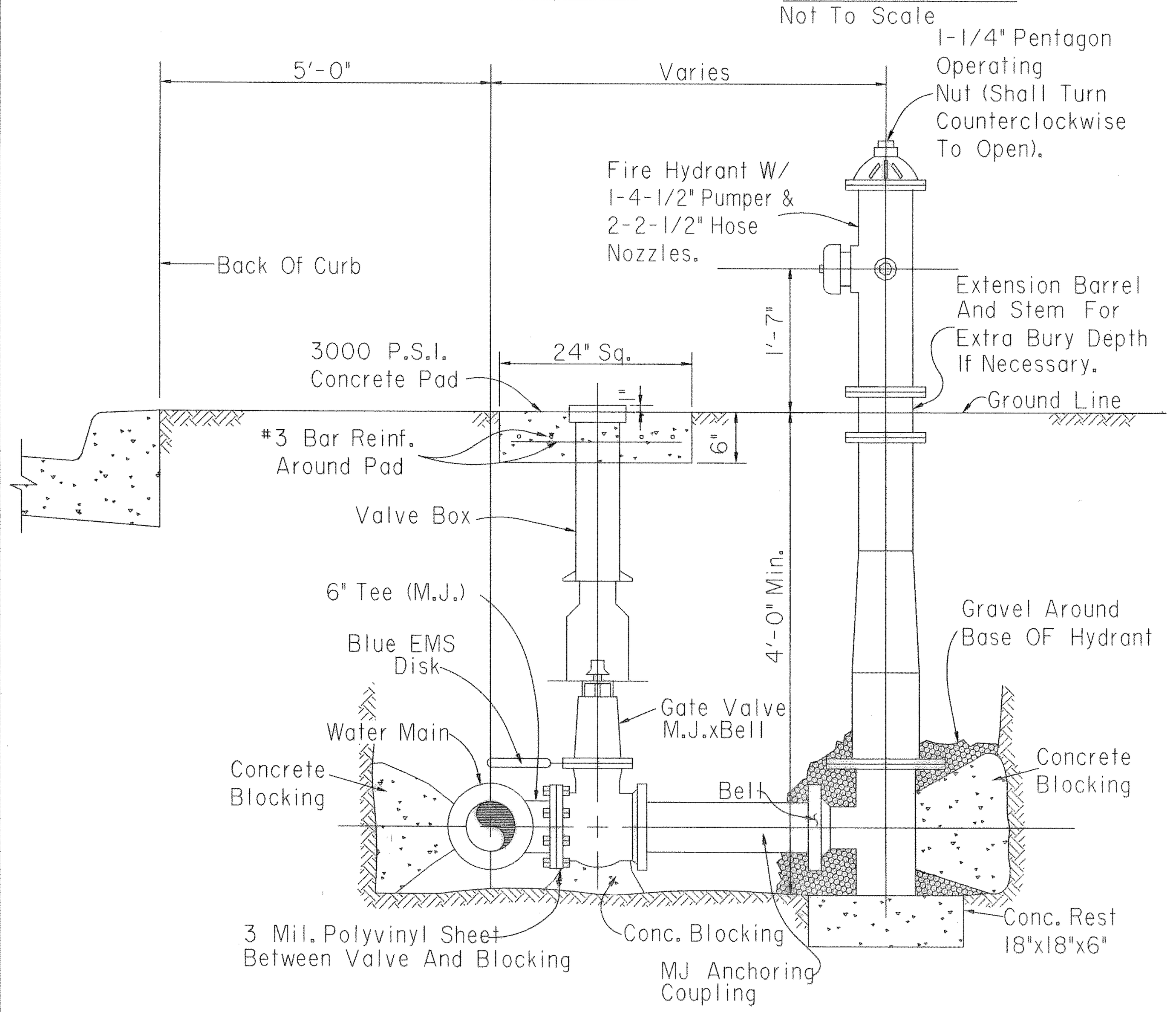

TYPICAL FIRE HYDRANT INSTALLATION

Not To Scale

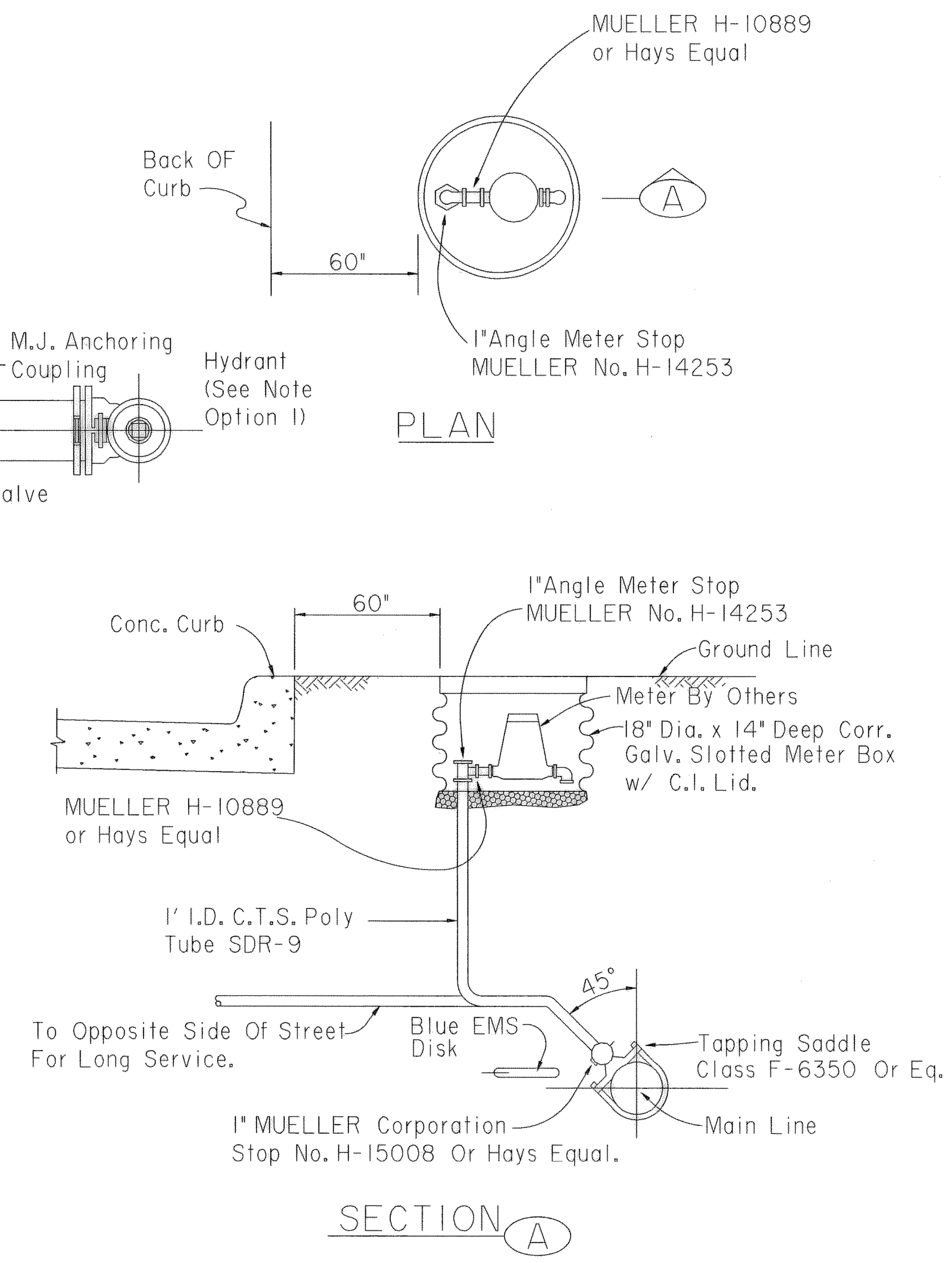

SINGLE SERVICE CONNECTION

Not To Scale

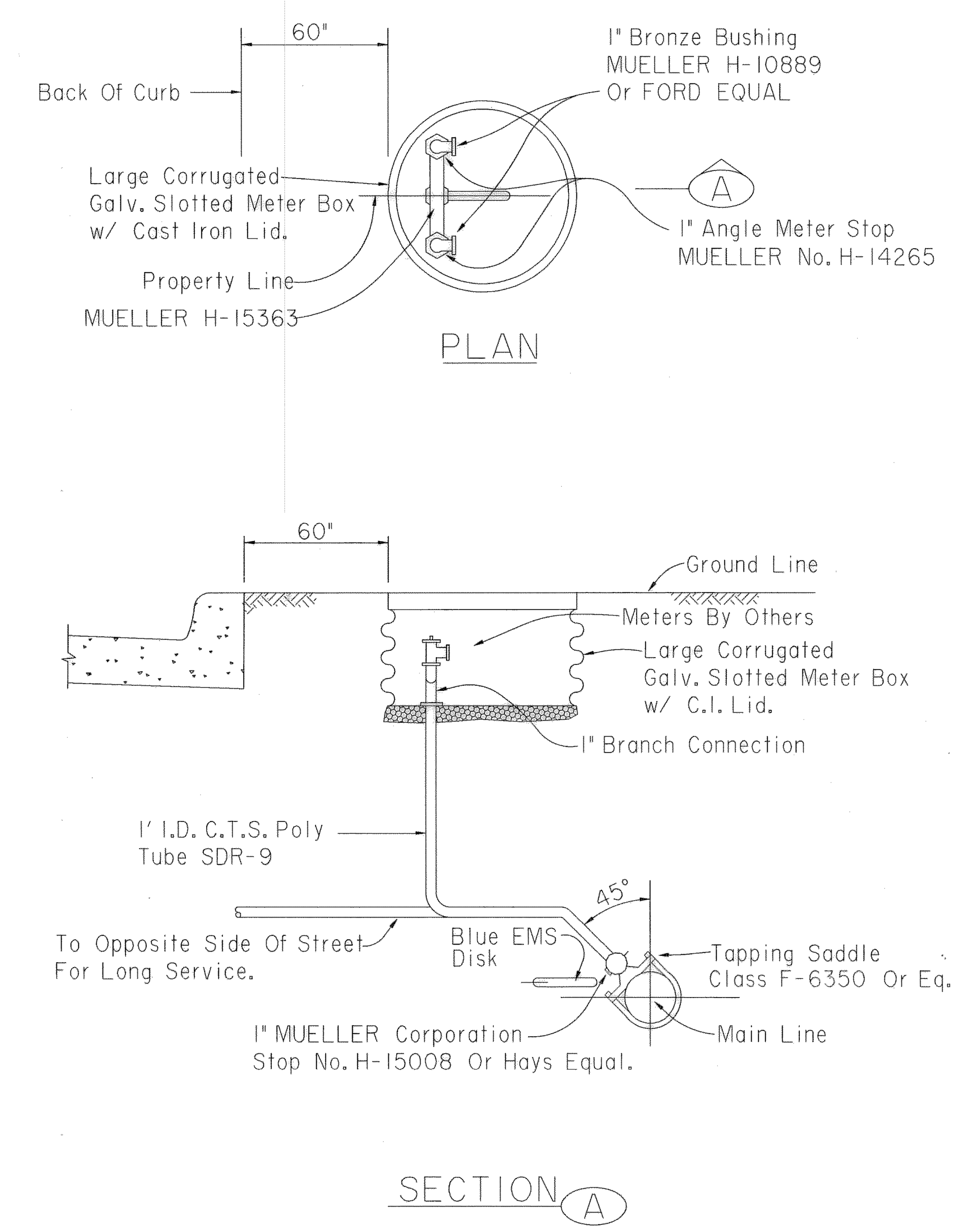

DOUBLE SERVICE CONNECTION

Not To Scale

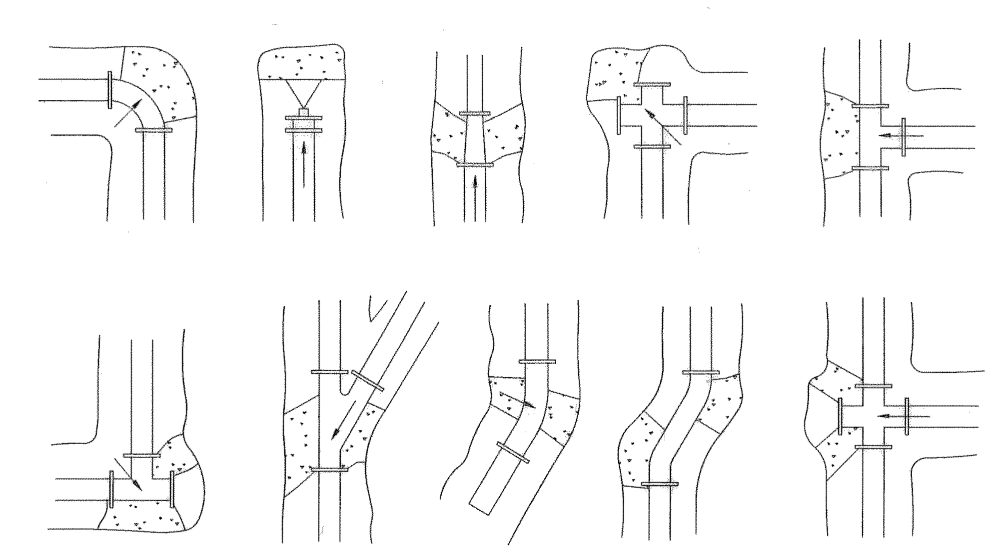

TYPICAL THRUST BLOCKING DETAILS

GRANULAR, TYPE 3, EMBEDMENT: Pit run granular embedment material shall be free flowing sand or mixed sand and pea gravel free from large stones, clay and organic material. The material may be an inferior grade of pit run or blow sand not normally considered satisfactory for concrete aggregate and may be used directly from pits without processing, provided it complies with the qualities described herein. The material shall be such that when wet it will not form a mud ball or tend to cling together. The material shall have 100% passing one inch (1") sieve, and the plasticity index of that part passing the 40 sieve is obtained from the City.

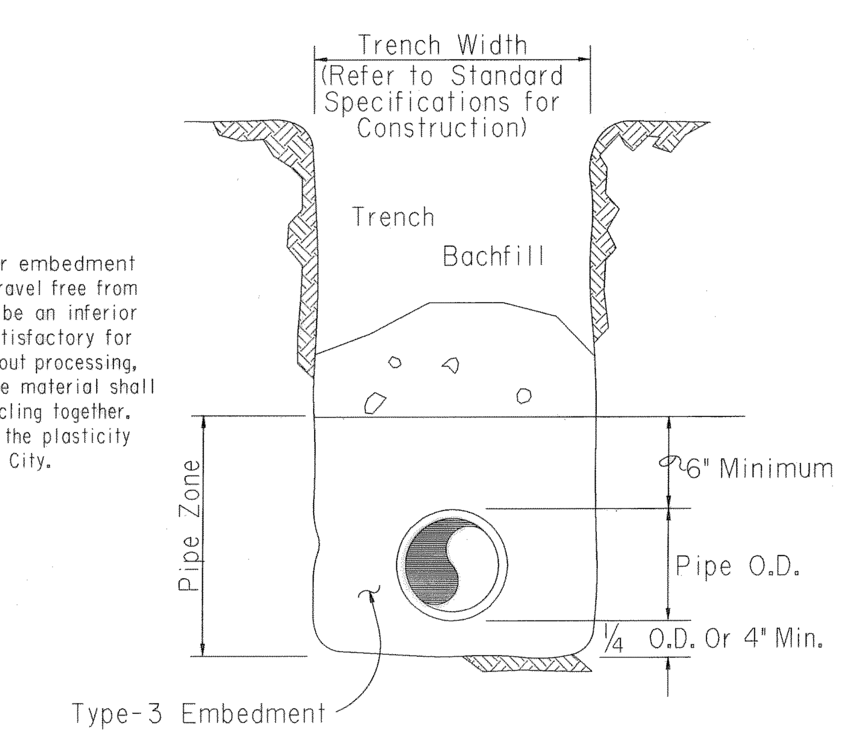

PIPE EMBEDMENT DETAIL

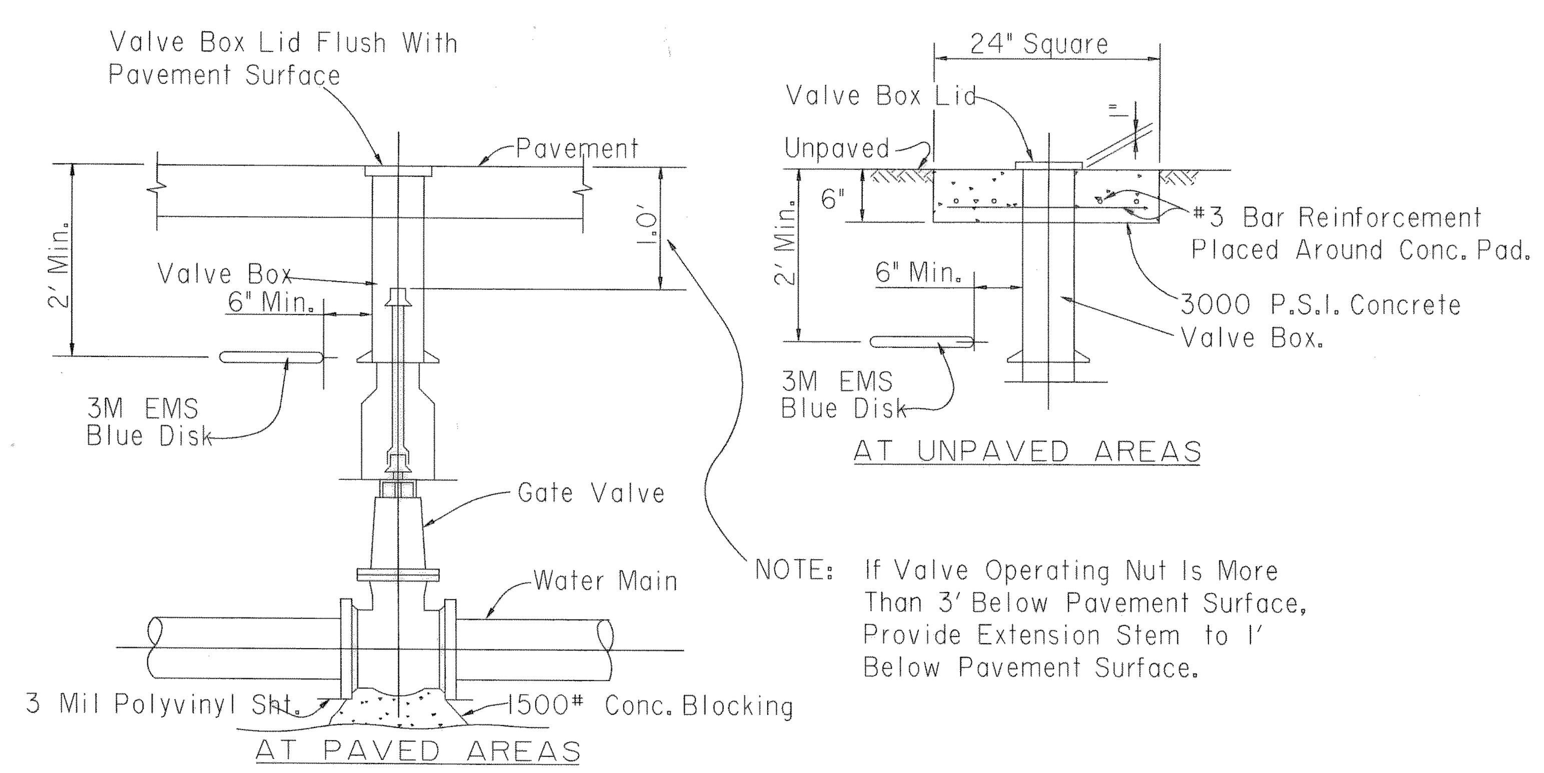

TYPICAL GATE VALVE AND BOX EXTENSION STEM DETAIL

Not To Scale

TYPICAL THRUST BLOCKING DETAILS

NOTES:

1. The earth bearing surface shall be undisturbed material. Keep all joints free from concrete. Thrust block to be constructed of 1,500 P.S.I. (20 day) concrete and placed as shown on "Typical Blocking Details" above.
2. It shall be the responsibility of the contractor to install adequate thrust blocking. The HORIZONTAL BLOCKING TABLE shows the minimum thrust blocking area required (in square feet) bearing against undisturbed trench wall.
3. All fittings shall be blocked regardless of the angle or direction, except as noted in the chart.
4. Soil bearing strength is assumed. To be 2,000 P.S.F. site conditions may vary which will require modifications to the blocking calculations.

HORIZONTAL BLOCKING TABLE

AREA REQUIRED (IN SQUARE FEET) BEARING AGAINST UNDISTURBED TRENCH WALL

PIPE SIZE (IN.)	THRUST (POUNDS) DEAD END AND TEE	BLOCKING (SQUARE FEET)					
		DEAD END AND TEE	90° BEND	45° BEND	22-1/2° BEND	11-1/4° BEND	5° DEFLECT
4	2,450	1.23	1.73	0.94	0.50	0.50	0.50
6	5,513	2.76	3.90	2.11	1.08	0.54	0.50
8	9,802	4.90	6.93	3.75	1.91	0.96	0.50
10	15,315	7.66	10.83	5.86	2.99	1.50	0.67
12	22,054	11.03	15.59	8.43	4.30	2.16	0.96

BASED ON 2,000 P.S.F. SOIL BEARING CAPACITY AND 195 P.S.I. LINE PRESSURE (150 P.S.I. WORKING PRESSURE PLUS 30% FOR WATER HAMMER.)

WATER DETAILS						
STANDARD DETAILS						
ROCKWALL, TEXAS						
CITY OF ROCKWALL "THE NEW HORIZON"						
DESIGN	DRAWN	APPR.	SCALE	DATE	PROJECT NO.	NO.
CITY OF ROCKWALL			N.T.S.	MAY 98	01226201	D-5