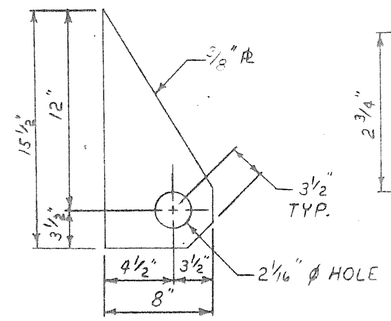

WING PL 4
(12 REQ'D)

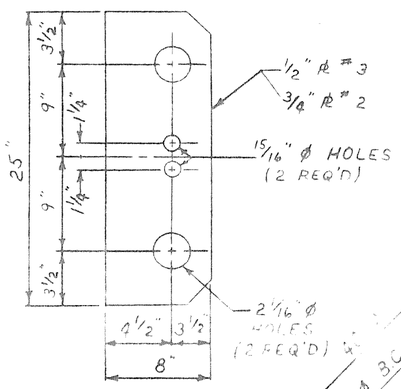

WING PL 2 & 3
(12 EA. REQ'D)
(24 TOTAL)

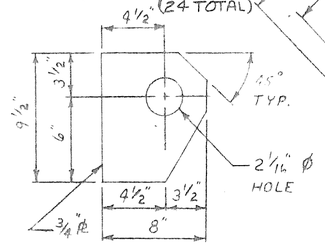

USE 1/2" PL FOR SHACKLE PL (6 REQ'D)
WING PL 1 & SHACKLE PL
(18 REQ'D)

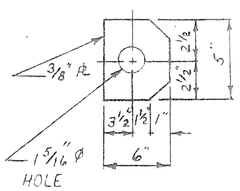

RISER WING PL 5
(36 REQ'D)

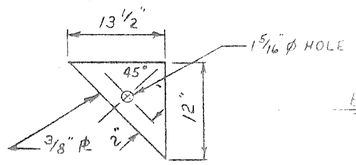

BALCONY BRACE
(6 REQ'D)

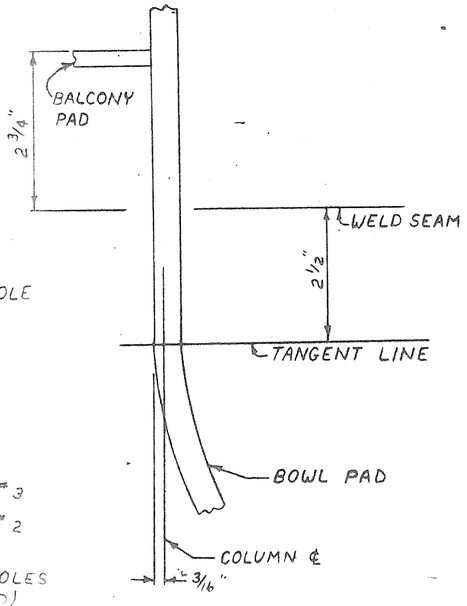

DETAIL "B"

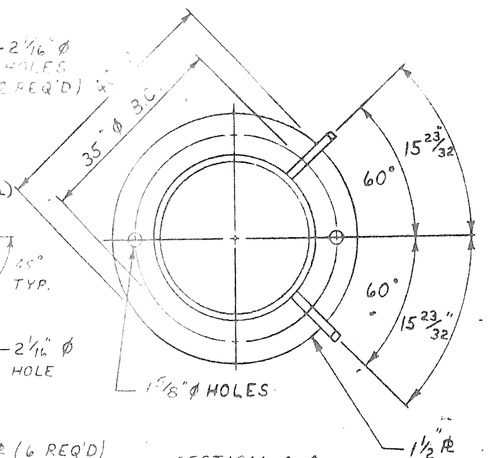

SECTION A-A
BASE PL (6 REQ'D)

SHIP 1~1/2" I.D. STD. WASHER FOR EACH ANCHOR BOLT

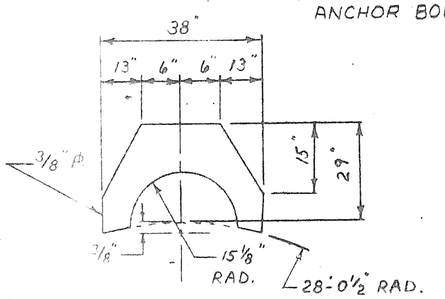

BALCONY SUPPORT
(6 REQ'D)

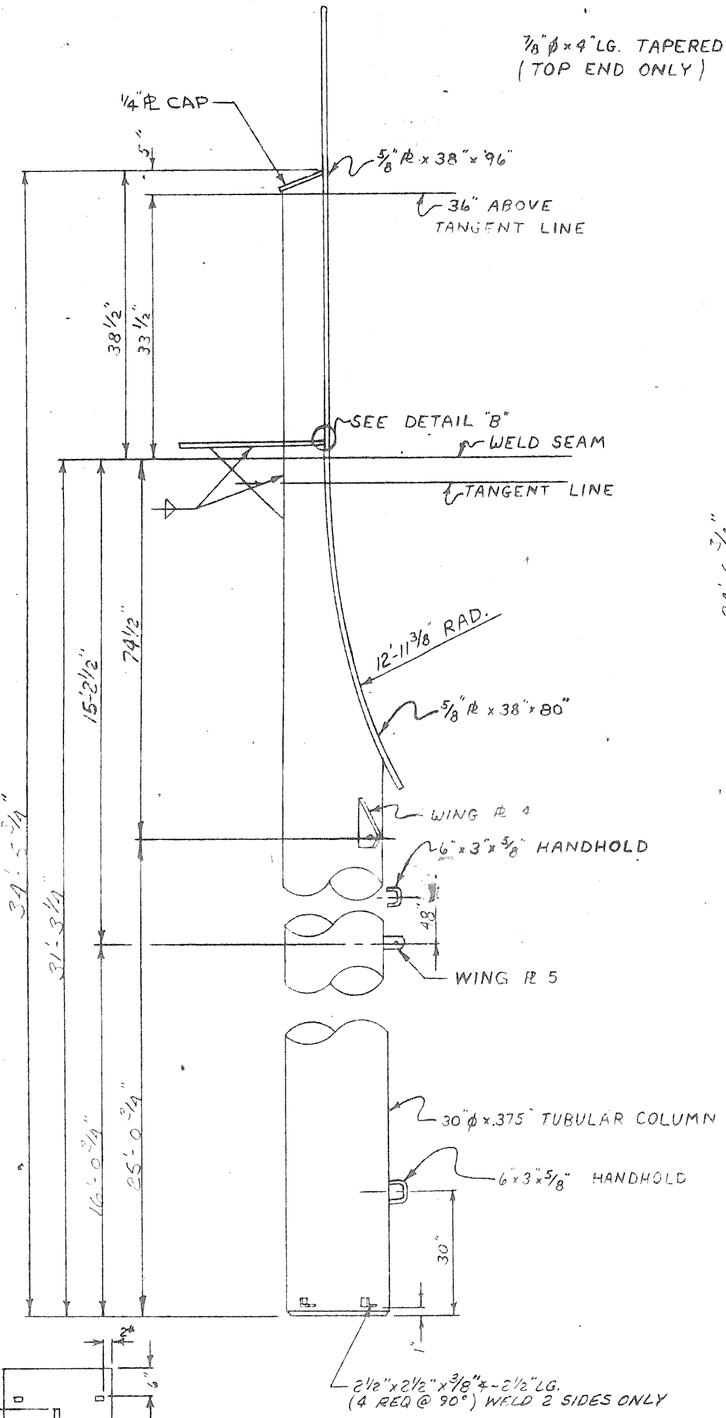

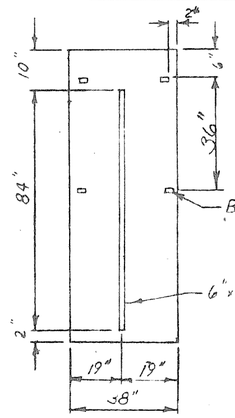

COLUMN BAY 3
(6 REQ'D) (1990 LBS)

BLANK NUTS FOR FIT-UP

6" x 5/8" STIFFENERS

SHOP LOCATE LIFTING LUG HOLES

INSERT PLATE REINFORCING

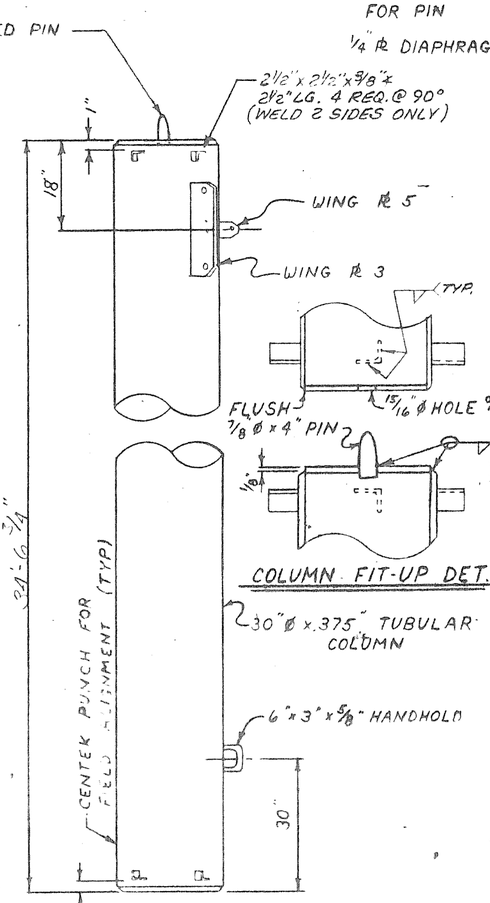

COLUMN FIT-UP DET.

COLUMN BAY 2
(4250 LBS.) (6 REQ'D)

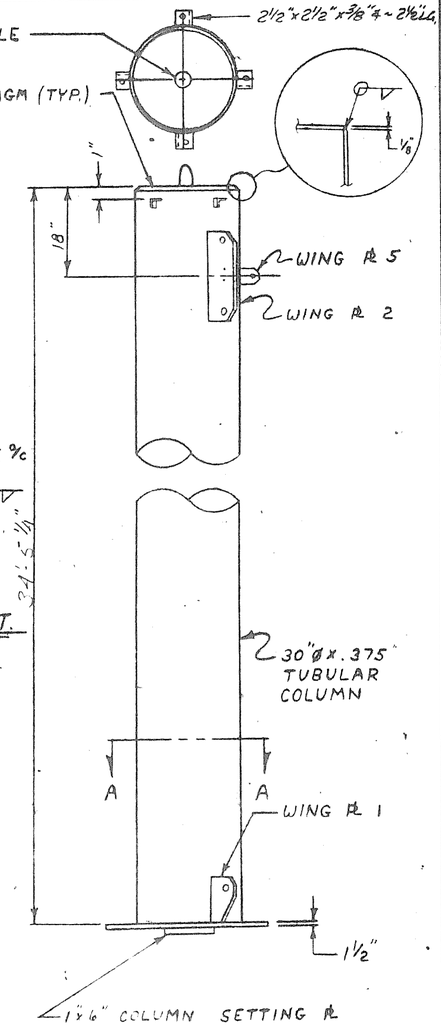

COLUMN BAY 1
(6 REQ'D) (4825 LBS)

MAT'L:
PIPE - A.S.T.M. A-53 GR. B OR
A.S.T.M. A-139 GR. B
PLATE - A.S.T.M. A-283 GR. C

NO.	DATE	BY	REVISION

UNIVERSAL TANK & IRON WORKS, INC.

INDIANAPOLIS, INDIANA

ENGINEER APPROVAL

☑ APPROVED ☐ APPROVED AS CORRECTED
☐ NOT APPROVED ☐ REVISE AND RESUBMIT
CHECKED FOR GENERAL COMPLIANCE WITH PLANS AND SPECIFICATIONS. CONTRACTOR SHALL VERIFY ALL DIMENSIONS AND QUANTITIES, AND COORDINATE EQUIPMENT ASSEMBLY AND WORK OF ALL TRADES. NO DEVIATION FROM PLANS AND SPECIFICATIONS PERMITTED UNLESS SPECIFICALLY NOTED.
FRANKS AND NICHOLS
CONSULTING ENGINEERS
BY [illegible] DATE 6-2-78

COLUMN DETAILS
56'-0" DIA. 500,000 GAL.

FOR:
ROCKWALL, TX.

DATE: 4-25-78	SCALE: NONE
DRWN BY: DP / DC	CHECKED: V.L.R.
JOB NO: 6544	SHEET 2 OF 9

MARBAUGH ENG. SUPPLY