CITY OF ROCKWALL, TEXAS

CONSTRUCTION PLANS FOR:

AMITY LANE
SANITARY SEWER IMPROVEMENTS

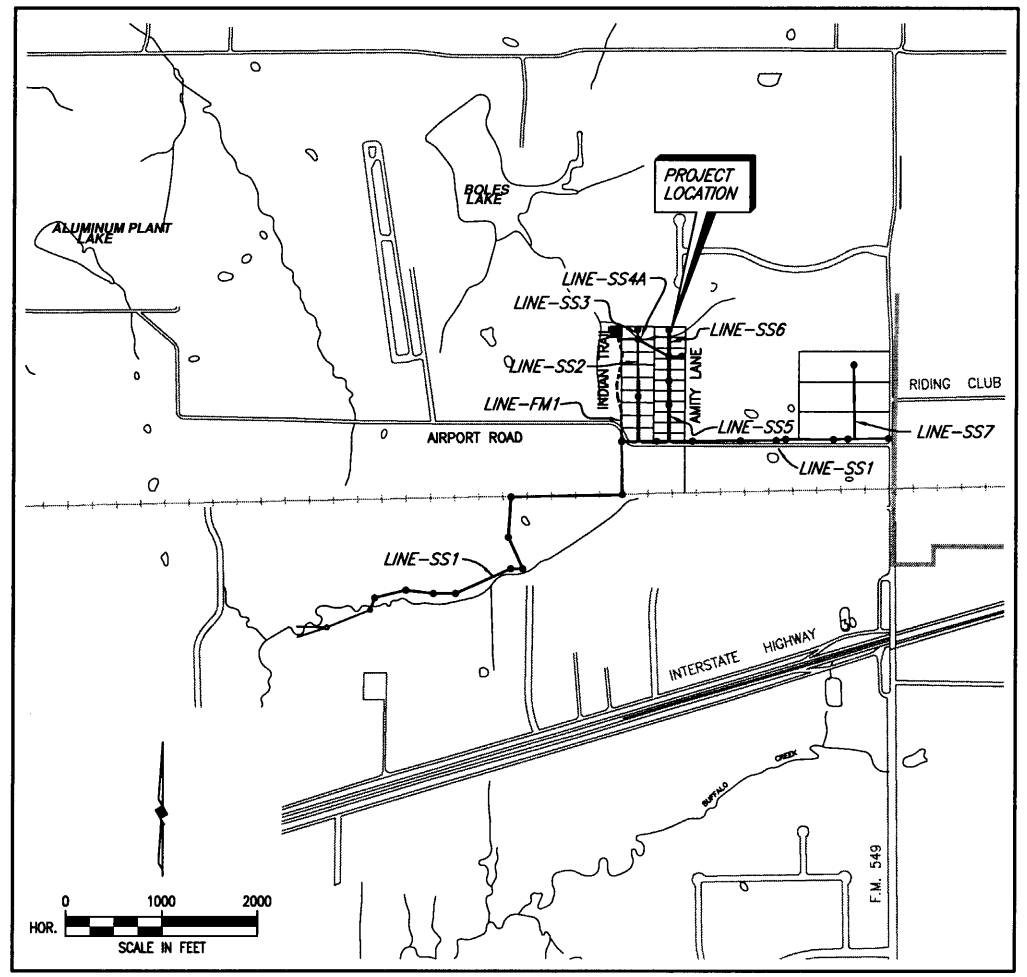

LOCATION MAP

COUNCIL MEMBERS

KEN JONES, MAYOR
TIM McCALLUM, MAYOR PRO-TEM
STEPHEN STRAUGHAN
BOB COTTI
JOHN KING
TERRY RAULSTON
BILL CECIL

CITY MANAGER

JULIE COUCH

ASSISTANT CITY MANAGER

RICHARD CROWLEY

CITY ENGINEER

CHUCK TODD, P.E.

BIRKHOFF, HENDRICKS & CONWAY, L.L.P.
CONSULTING ENGINEERS
Dallas, Texas

SEPTEMBER, 2004

This record drawing is a compilation of the sealed engineering drawing for this project; modified by addenda, change orders and information furnished by the contractor. The information shown on the record drawings that was provided by the contractor or others not associated with the design engineer cannot be verified for accuracy or completeness. This original sealed drawings are on file at the offices of Birkhoff, Hendricks & Conway, L.L.P.

BY PAC DATE 1/19/07

THESE DOCUMENTS ARE FOR BIDDING, CONSTRUCTION, AND PERMIT PURPOSES.
DATE: 9/14/04

STATE OF TEXAS
PAUL A. CARLINE
85400
LICENSED
PROFESSIONAL ENGINEER

SHEET INDEX

SHEET NO.	SHEET DESCRIPTION
–	COVER SHEET & LOCATION MAP
1–8	SANITARY SEWER LINE 'SS1' PLAN/PROFILE
8A	SANITARY SEWER LINE 'SS7' PLAN/PROFILE
9	SANITARY SEWER LINE 'SS2' & 'SS3' PLAN/PROFILE
10	SANITARY SEWER LINE 'SS2' PLAN/PROFILE
11	SANITARY SEWER LINE 'SS4' PLAN/PROFILE
12	SANITARY SEWER LINE 'SS5' & 'SS6' PLAN/PROFILE
13	SANITARY SEWER LINE 'SS5' PLAN/PROFILE
14 & 15	FORCE MAIN LINE 'FM1'
16	INDIAN TRAIL LIFT STATION
17	INDIAN TRAIL LIFT STATION SITE PLAN
18 & 19	DETAILS

H:\Projects\Rockwall\2002104\Sheets\2002104-00.dwg
09/09/04 KAB

This record drawing is a compilation of the sealed engineering drawing for this project; modified by addenda, change orders and information furnished by the contractor. The information shown on the record drawings that was provided by the contractor or others not associated with the design engineer cannot be verified for accuracy or completeness. This original sealed drawings are on file at the offices of Birkhoff, Hendricks & Conway, L.L.P.

BY PAC DATE 1/19/07

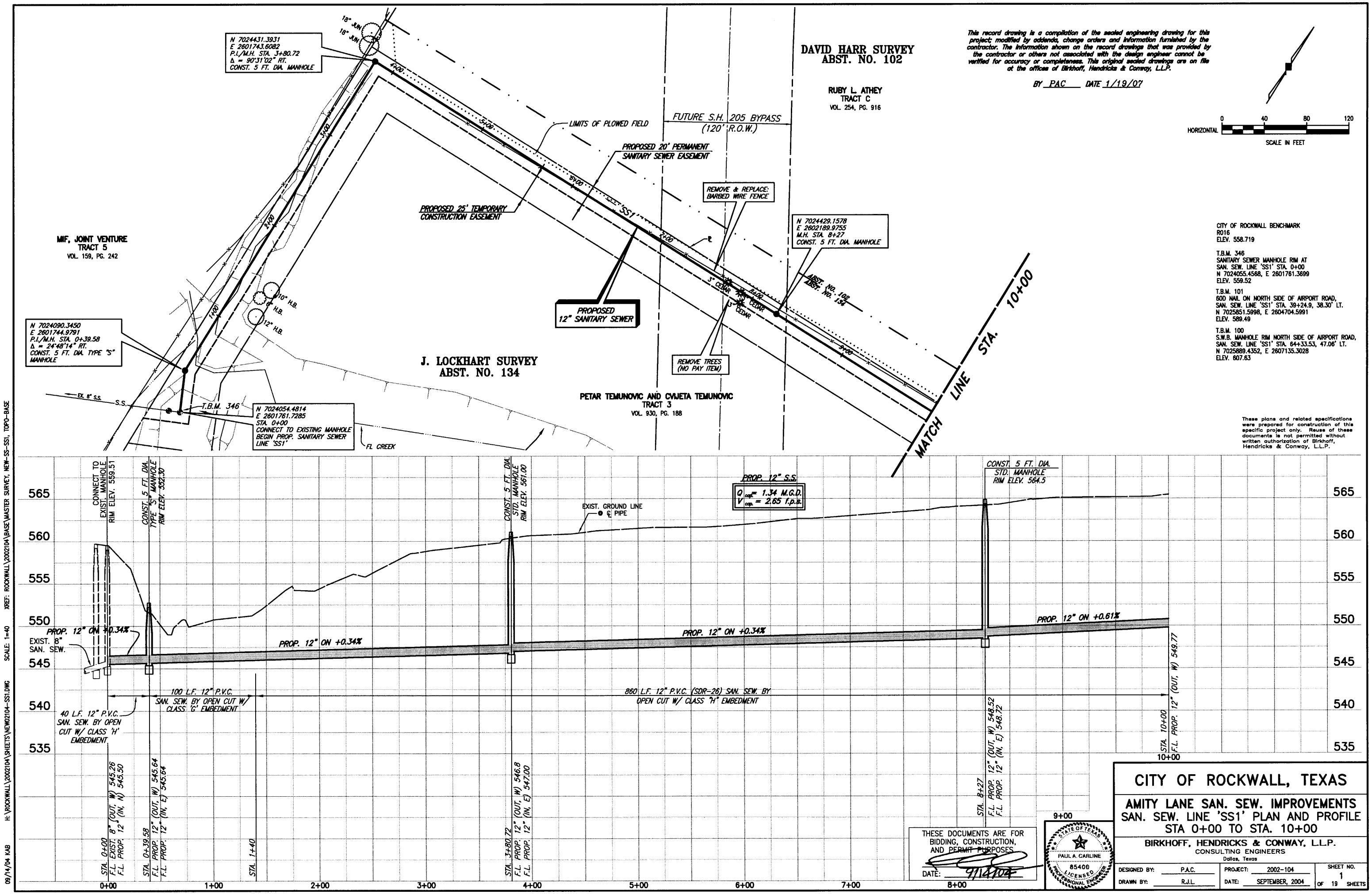

CITY OF ROCKWALL, TEXAS

AMITY LANE SAN. SEW. IMPROVEMENTS
SAN. SEW. LINE 'SS1' PLAN AND PROFILE
STA 0+00 TO STA. 10+00

BIRKHOFF, HENDRICKS & CONWAY, L.L.P.
CONSULTING ENGINEERS
Dallas, Texas

DESIGNED BY: P.A.C.	PROJECT: 2002-104	SHEET NO. 1 OF 19 SHEETS
DRAWN BY: R.J.L.	DATE: SEPTEMBER, 2004	

09/14/04 KAB H:\ROCKWALL\2002104\SHEETS\NEW02104-SS1.DWG SCALE: 1=40 XREF: ROCKWALL\2002104\BASE\MASTER SURVEY, NEW-SS-SS1, TOPO-BASE

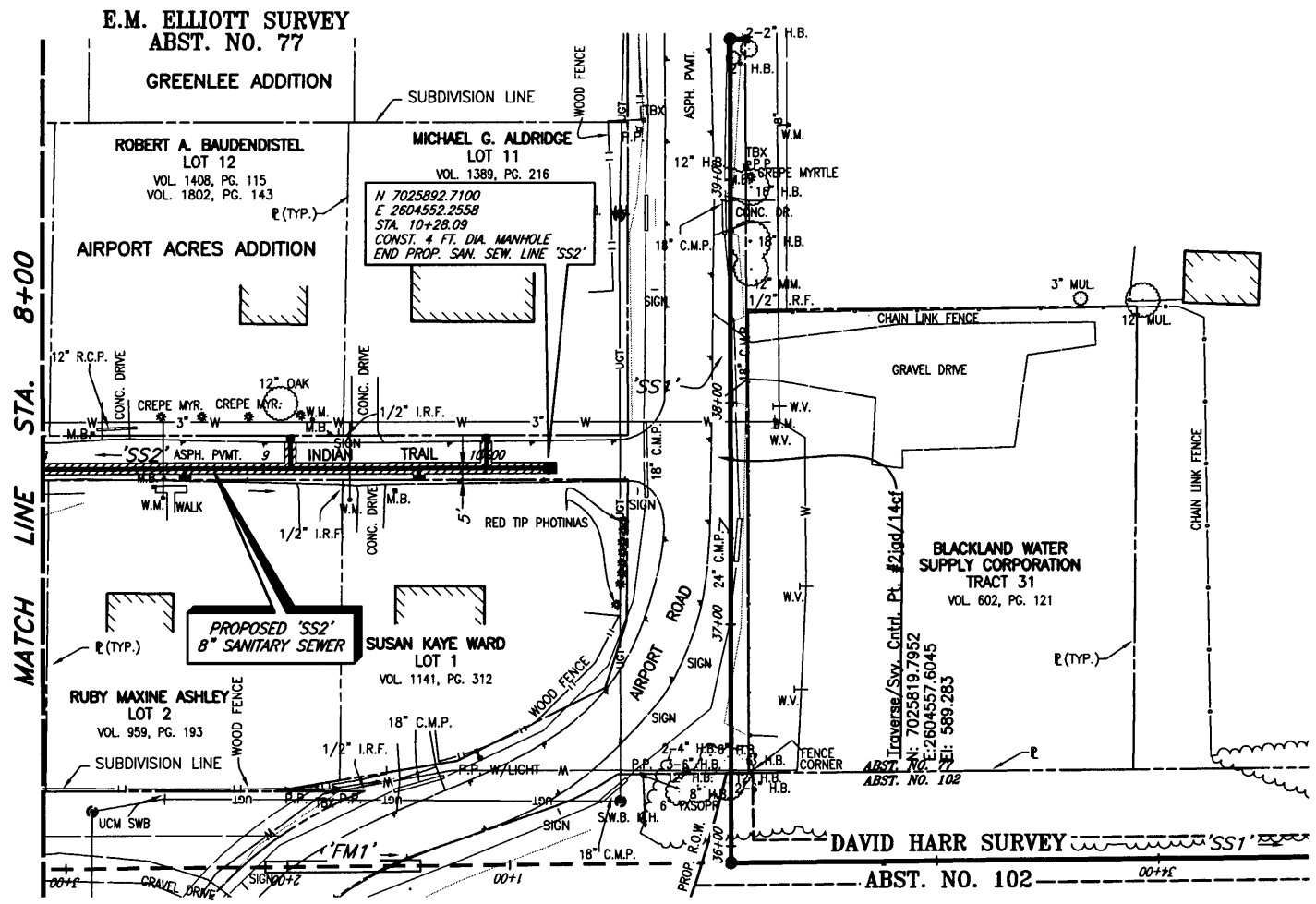

SANITARY SEWER SERVICES	
LOCATION	PROP. 4" SERVICES (L.F.)
STA. 8+64.42 (SS2)	5' WEST
STA. 9+11.84 (SS2)	15' EAST
STA. 9+70 (SS2)	5' WEST
STA. 10+00 (SS2)	15' EAST
FURNISH & INSTALL: 1-8"x4" WYE 4" P.V.C. WASTEWATER LATERAL CONNECTION	

HORIZONTAL 0 40 80 120
SCALE IN FEET

CITY OF ROCKWALL BENCHMARK
R016
ELEV. 558.719

T.B.M. 346
SANITARY SEWER MANHOLE RIM AT
SAN. SEW. LINE 'SS1' STA. 0+00
N 7024055.4568, E 2601761.3699
ELEV. 559.52

T.B.M. 101
60D NAIL ON NORTH SIDE OF AIRPORT ROAD,
SAN. SEW. LINE 'SS1' STA. 39+24.9, 38.30' LT.
N 7025851.5998, E 2604704.5991
ELEV. 589.49

T.B.M. 100
S.W.B. MANHOLE RIM NORTH SIDE OF AIRPORT ROAD,
SAN. SEW. LINE 'SS1' STA. 64+33.53, 47.06' LT.
N 7025889.4352, E 2607135.3028
ELEV. 607.63

This record drawing is a compilation of the sealed engineering drawing for this project; modified by addenda, change orders and information furnished by the contractor. The information shown on the record drawings that was provided by the contractor or others not associated with the design engineer cannot be verified for accuracy or completeness. This original sealed drawings are on file at the offices of Birkhoff, Hendricks & Conway, L.L.P.

BY PAC DATE 1/19/07

These plans and related specifications were prepared for construction of this specific project only. Reuse of these documents is not permitted without written authorization of Birkhoff, Hendricks & Conway, L.L.P.

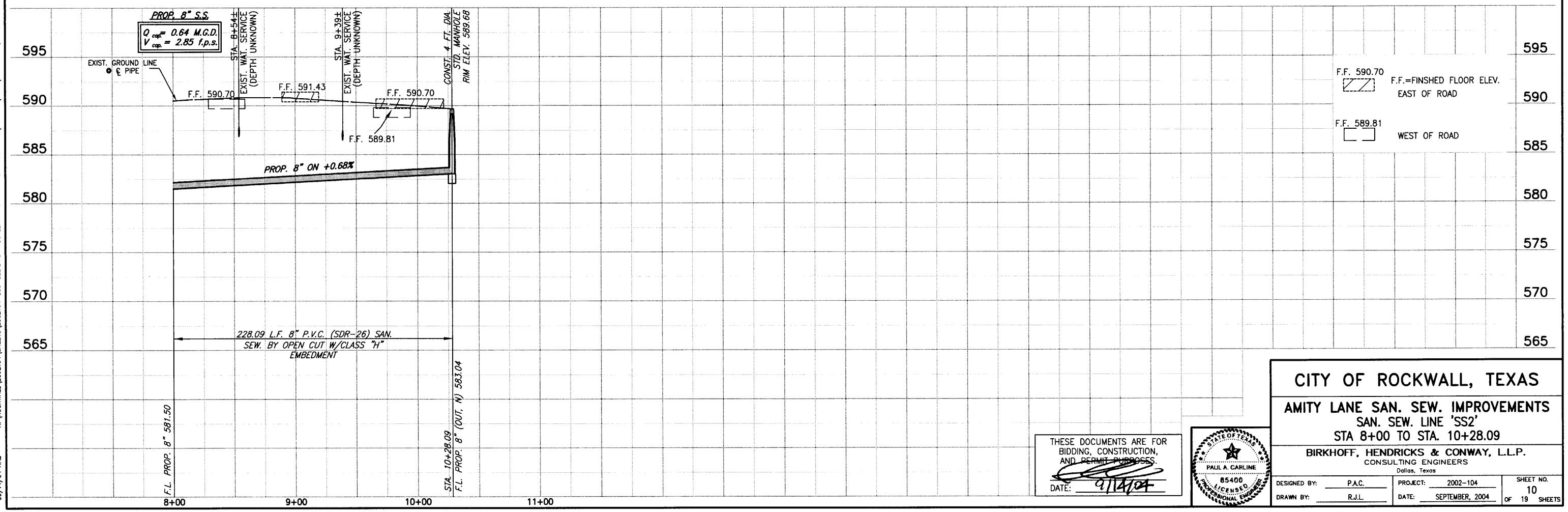

THESE DOCUMENTS ARE FOR BIDDING, CONSTRUCTION, AND PERMIT PURPOSES.
DATE: 9/14/04

STATE OF TEXAS
PAUL A. CARLINE
85400
LICENSED
PROFESSIONAL ENGINEER

CITY OF ROCKWALL, TEXAS

AMITY LANE SAN. SEW. IMPROVEMENTS
SAN. SEW. LINE 'SS2'
STA 8+00 TO STA. 10+28.09

BIRKHOFF, HENDRICKS & CONWAY, L.L.P.
CONSULTING ENGINEERS
Dallas, Texas

DESIGNED BY: P.A.C.	PROJECT: 2002-104	SHEET NO. 10 OF 19 SHEETS
DRAWN BY: R.J.L.	DATE: SEPTEMBER, 2004	

09/14/04 KAB H:\ROCKWALL\2002104\SHEETS\2002104-SS9-S2B.DWG SCALE: 1=40 XREF: ROCKWALL\2002104\BASE\TOPO-BASE, MASTER SURVEY, SanSewSS1 Rev(2)

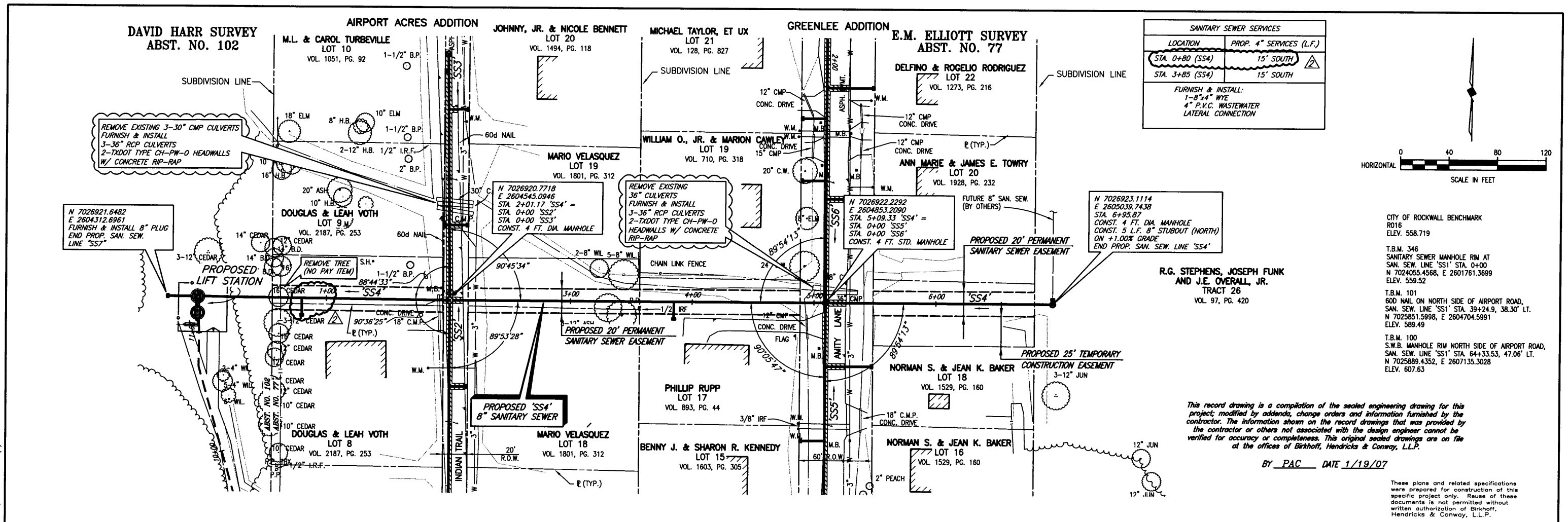

SANITARY SEWER SERVICES	
LOCATION	PROP. 4" SERVICES (L.F.)
STA. 0+80 (SS4)	15' SOUTH 2
STA. 3+85 (SS4)	15' SOUTH

FURNISH & INSTALL:
1-8"x4" WYE
4" P.V.C. WASTEWATER
LATERAL CONNECTION

HORIZONTAL 0 40 80 120
SCALE IN FEET

CITY OF ROCKWALL BENCHMARK
R016
ELEV. 558.719

T.B.M. 346
SANITARY SEWER MANHOLE RIM AT
SAN. SEW. LINE 'SS1' STA. 0+00
N 7024055.4568, E 2601761.3699
ELEV. 559.52

T.B.M. 101
60D NAIL ON NORTH SIDE OF AIRPORT ROAD,
SAN. SEW. LINE 'SS1' STA. 39+24.9, 38.30' LT.
N 7025851.5998, E 2604704.5991
ELEV. 589.49

T.B.M. 100
S.W.B. MANHOLE RIM NORTH SIDE OF AIRPORT ROAD,
SAN. SEW. LINE 'SS1' STA. 64+33.53, 47.06' LT.
N 7025889.4352, E 2607135.3028
ELEV. 607.63

This record drawing is a compilation of the sealed engineering drawing for this project; modified by addenda, change orders and information furnished by the contractor. The information shown on the record drawings that was provided by the contractor or others not associated with the design engineer cannot be verified for accuracy or completeness. This original sealed drawings are on file at the offices of Birkhoff, Hendricks & Conway, L.L.P.

BY PAC DATE 1/19/07

These plans and related specifications were prepared for construction of this specific project only. Reuse of these documents is not permitted without written authorization of Birkhoff, Hendricks & Conway, L.L.P.

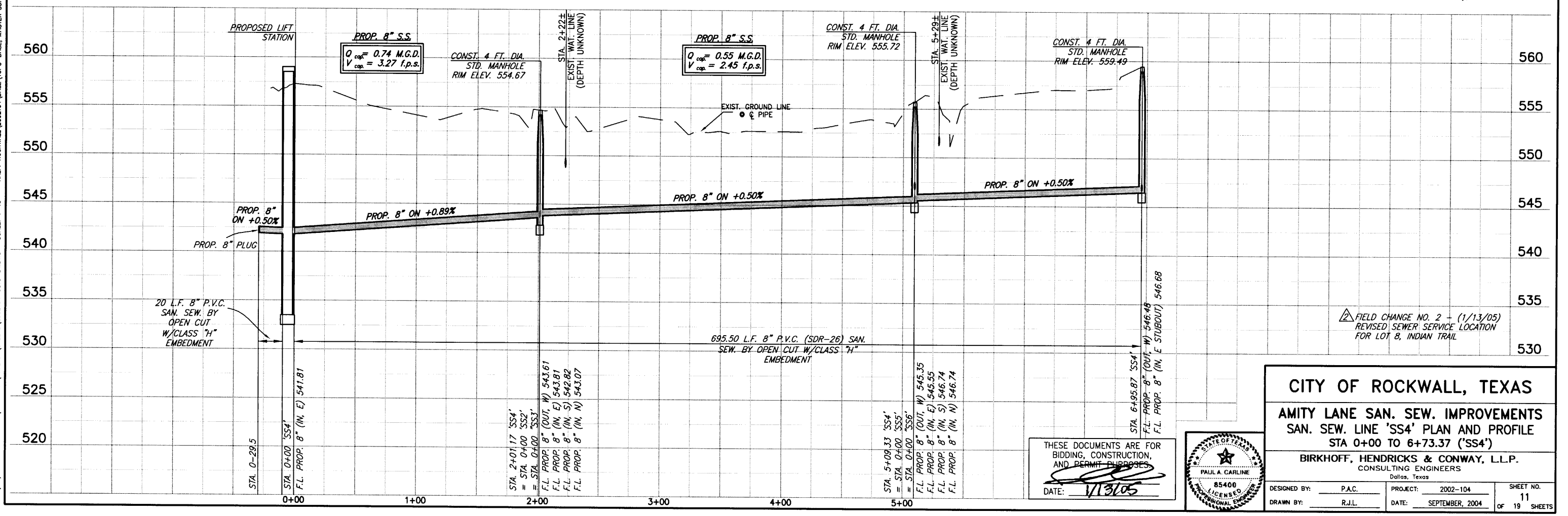

2 FIELD CHANGE NO. 2 - (1/13/05)
REVISED SEWER SERVICE LOCATION
FOR LOT 8, INDIAN TRAIL

THESE DOCUMENTS ARE FOR BIDDING, CONSTRUCTION, AND PERMIT PURPOSES.
DATE: 1/13/05

STATE OF TEXAS
PAUL A. CARLINE
85400
LICENSED
PROFESSIONAL ENGINEER

CITY OF ROCKWALL, TEXAS

AMITY LANE SAN. SEW. IMPROVEMENTS
SAN. SEW. LINE 'SS4' PLAN AND PROFILE
STA 0+00 TO 6+73.37 ('SS4')

BIRKHOFF, HENDRICKS & CONWAY, L.L.P.
CONSULTING ENGINEERS
Dallas, Texas

DESIGNED BY:	P.A.C.	PROJECT:	2002-104	SHEET NO. 11
DRAWN BY:	R.J.L.	DATE:	SEPTEMBER, 2004	OF 19 SHEETS

01/13/05 KAB H:\ROCKWALL\2002104\SHEETS\2002104-SS10-S4.DWG SCALE: 1=40 XREF: ROCKWALL\2002104\BASE\TOPO-BASE, MASTER SURVEY, SanSewSS1 Rev(2)

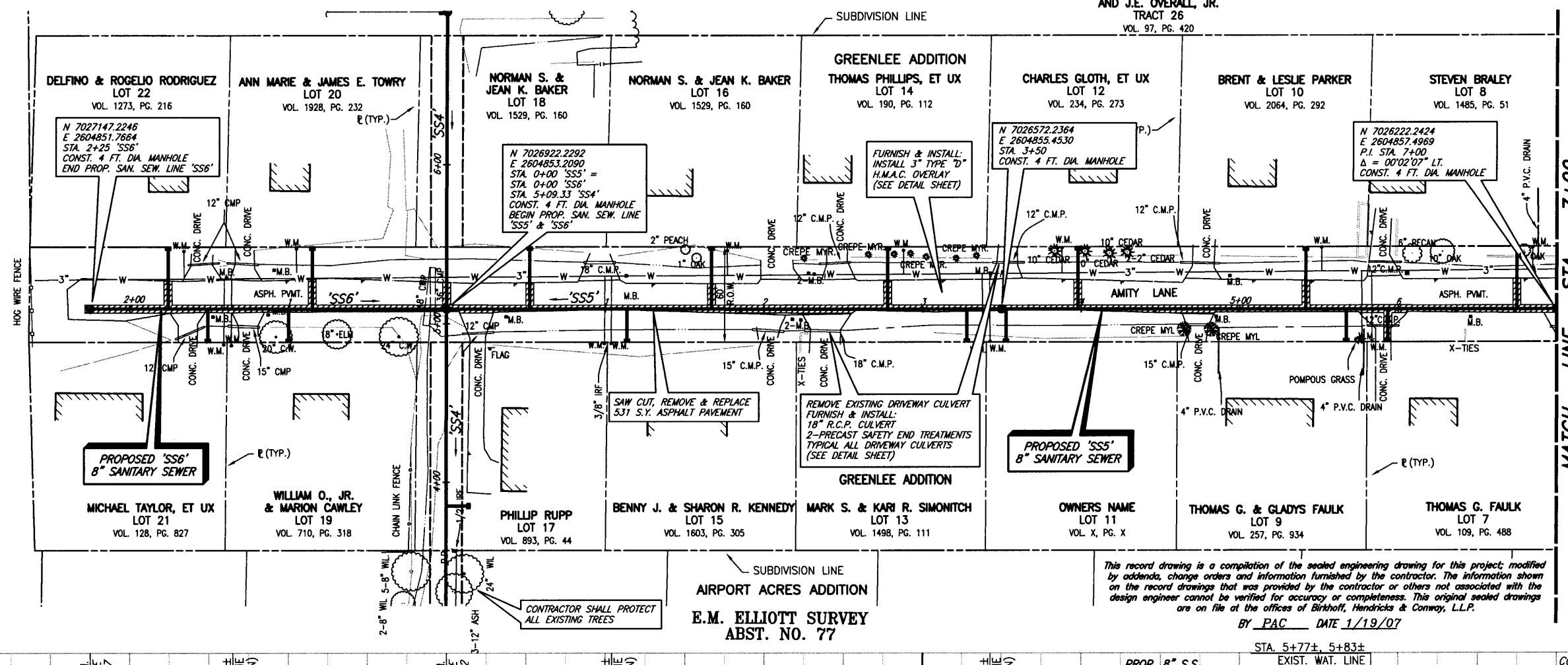

This record drawing is a compilation of the sealed engineering drawing for this project; modified by addenda, change orders and information furnished by the contractor. The information shown on the record drawings that was provided by the contractor or others not associated with the design engineer cannot be verified for accuracy or completeness. This original sealed drawings are on file at the offices of Birkhoff, Hendricks & Conway, L.L.P.

BY PAC DATE 1/19/07

HORIZONTAL 0 40 80 120
SCALE IN FEET

SANITARY SEWER SERVICES	
LOCATION	PROP. 4" SERVICES (L.F.)
STA. 0+85.07 (SS6)	39.5' EAST
STA. 1+00 (SS6)	21' WEST
STA. 1+50.73 (SS6)	21' WEST
STA. 1+75.78 (SS6)	39.5' EAST
STA. 0+52.28 (SS5)	39.5' EAST
STA. 1+13.58 (SS5)	21' WEST
STA. 1+66.69 (SS5)	39.5' EAST
STA. 2+77.82 (SS5)	39.5' EAST
STA. 3+28.09 (SS5)	21' WEST
STA. 3+52.83 (SS5)	21' WEST
STA. 3+97.92 (SS5)	39.5' EAST
STA. 5+41.67 (SS5)	39.5' EAST
STA. 5+67.29 (SS5)	21' WEST
STA. 5+93.47 (SS5)	21' WEST
STA. 6+74.78 (SS5)	39.5' EAST

FURNISH & INSTALL:
1-8"x4" WYE
4" P.V.C. WASTEWATER
LATERAL CONNECTION

CITY OF ROCKWALL BENCHMARK
R016
ELEV. 558.719

T.B.M. 346
SANITARY SEWER MANHOLE RIM AT
SAN. SEW. LINE 'SS1' STA. 0+00
N 7024055.4568, E 2601761.3699
ELEV. 559.52

T.B.M. 101
60D NAIL ON NORTH SIDE OF AIRPORT ROAD,
SAN. SEW. LINE 'SS1' STA. 39+24.9, 38.30' LT.
N 7025851.5998, E 2604704.5991
ELEV. 589.49

T.B.M. 100
S.W.B. MANHOLE RIM NORTH SIDE OF AIRPORT ROAD,
SAN. SEW. LINE 'SS1' STA. 64+33.53, 47.06' LT.
N 7025889.4352, E 2607135.3028
ELEV. 607.63

These plans and related specifications were prepared for construction of this specific project only. Reuse of these documents is not permitted without written authorization of Birkhoff, Hendricks & Conway, L.L.P.

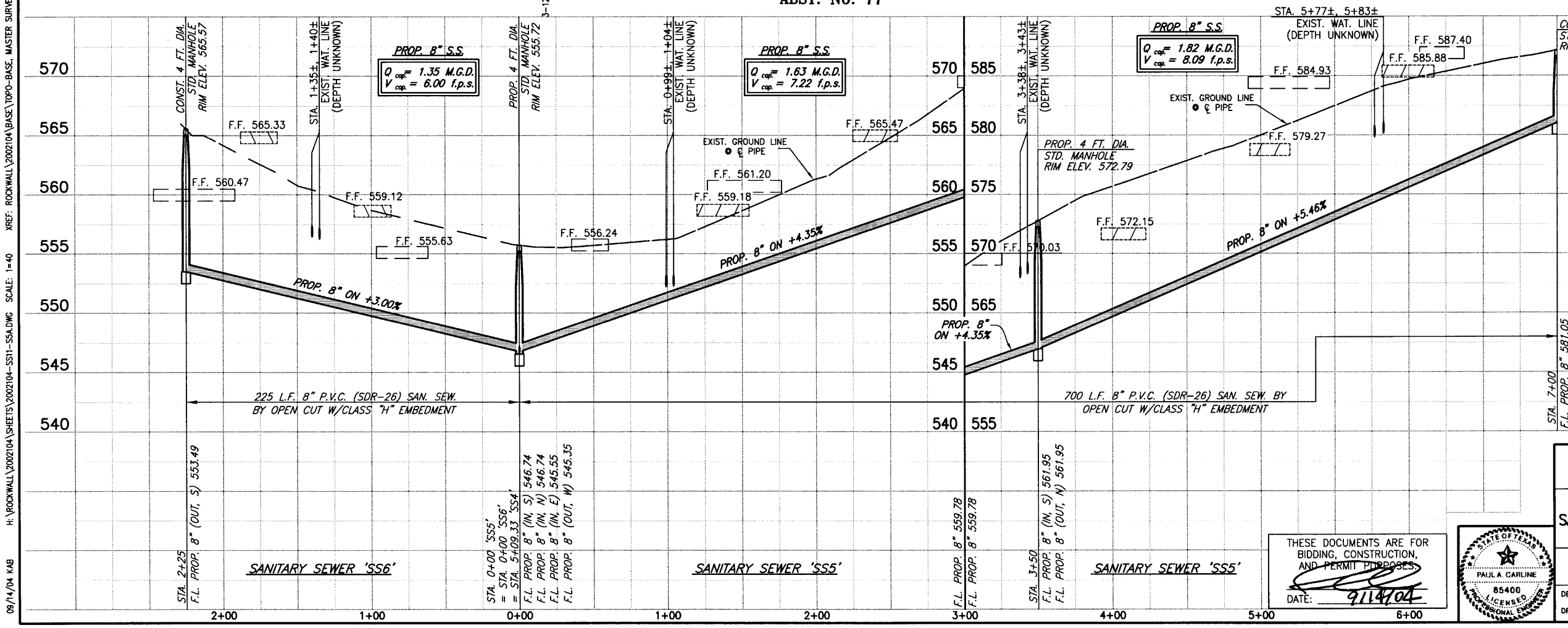

THESE DOCUMENTS ARE FOR BIDDING, CONSTRUCTION, AND PERMIT PURPOSES.
DATE: 9/14/04

STATE OF TEXAS
PAUL A. CARLINE
85400
LICENSED
PROFESSIONAL ENGINEER

CITY OF ROCKWALL, TEXAS

AMITY LANE SAN. SEW. IMPROVEMENTS

SAN. SEW. LINE 'SS5' & 'SS6' PLAN AND PROFILE
STA 0+00 TO 7+00 ('SS5') STA. 0+00 TO 2+25 ('SS6')

BIRKHOFF, HENDRICKS & CONWAY, L.L.P.
CONSULTING ENGINEERS
Dallas, Texas

DESIGNED BY: P.A.C.	PROJECT: 2002-104	SHEET NO. 12 OF 19 SHEETS
DRAWN BY: R.J.L.	DATE: SEPTEMBER, 2004	

08/14/04 KAB H:\ROCKWALL\2002104\SHEETS\2002104-SS11-SSA.DWG SCALE: 1=40 XREF: ROCKWALL\2002104\BASE\TOPO-BASE, MASTER SURVEY, SanSewSS1 Rev(2)

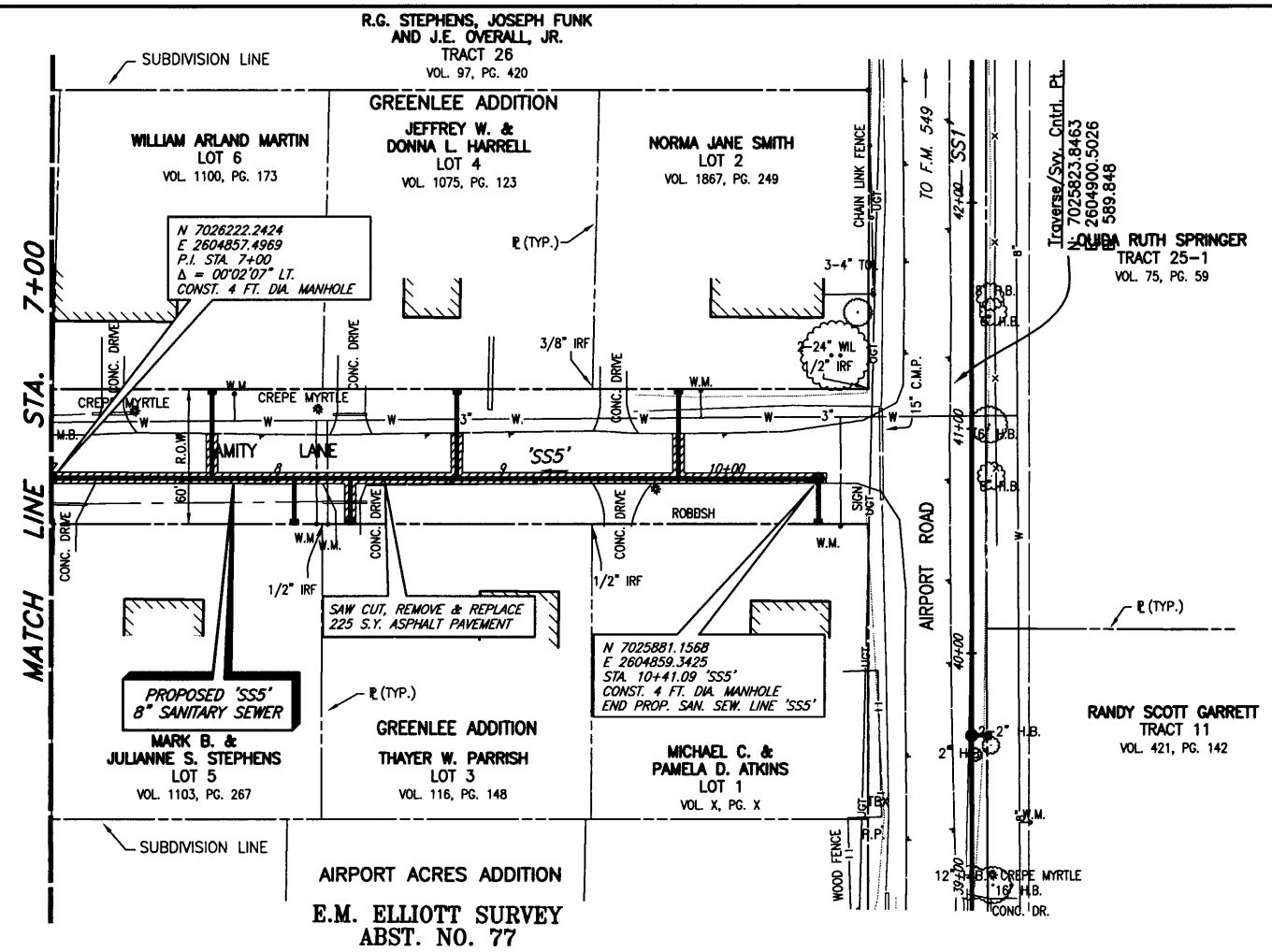

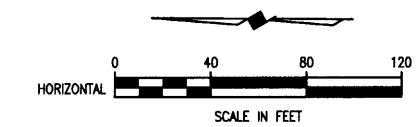

SANITARY SEWER SERVICES	
LOCATION	PROP. 4" SERVICES (L.F.)
STA. 7+71.03 (SS5)	39.5' EAST
STA. 8+07.96 (SS5)	21' WEST
STA. 8+32.99 (SS5)	21' WEST
STA. 8+80.47 (SS5)	39.5' EAST
STA. 9+78.77 (SS5)	39.5' EAST
STA. 10+41.09 (SS5)	21' WEST
FURNISH & INSTALL: 1-8"x4" WYE 4" P.V.C. WASTEWATER LATERAL CONNECTION	

CITY OF ROCKWALL BENCHMARK
R016
ELEV. 558.719

T.B.M. 346
SANITARY SEWER MANHOLE RIM AT SAN. SEW. LINE 'SS1' STA. 0+00
N 7024055.4568, E 2601761.3699
ELEV. 559.52

T.B.M. 101
60D NAIL ON NORTH SIDE OF AIRPORT ROAD, SAN. SEW. LINE 'SS1' STA. 39+24.9, 38.30' LT.
N 7025851.5998, E 2604704.5991
ELEV. 589.49

T.B.M. 100
S.W.B. MANHOLE RIM NORTH SIDE OF AIRPORT ROAD, SAN. SEW. LINE 'SS1' STA. 64+33.53, 47.06' LT.
N 7025889.4352, E 2607135.3028
ELEV. 607.63

This record drawing is a compilation of the sealed engineering drawing for this project; modified by addenda, change orders and information furnished by the contractor. The information shown on the record drawings that was provided by the contractor or others not associated with the design engineer cannot be verified for accuracy or completeness. This original sealed drawings are on file at the offices of Birkhoff, Hendricks & Conway, L.L.P.

BY PAC DATE 1/19/07

These plans and related specifications were prepared for construction of this specific project only. Reuse of these documents is not permitted without written authorization of Birkhoff, Hendricks & Conway, L.L.P.

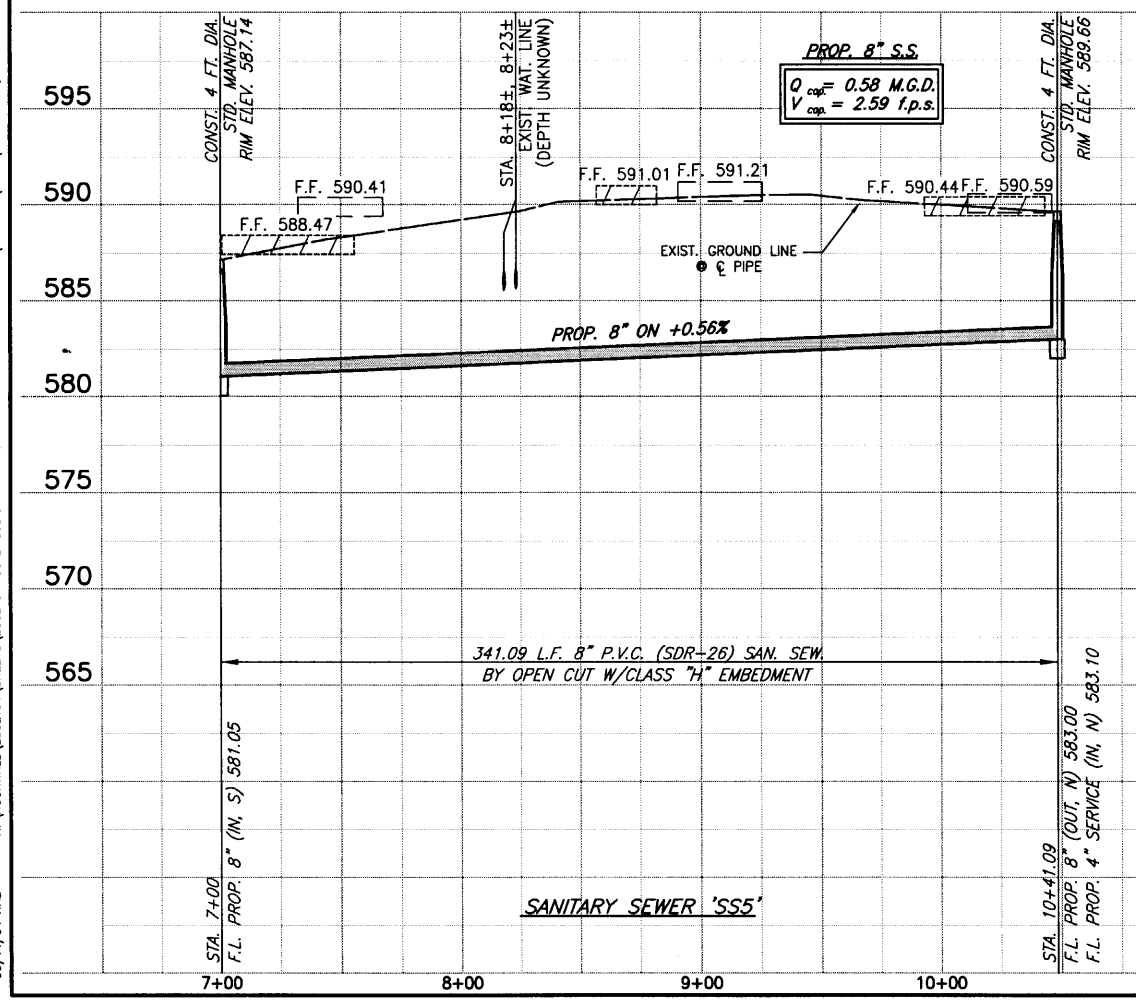

F.F. 585.88 F.F.=FINSHED FLOOR ELEV. EAST OF ROAD

F.F. 587.40 F.F.=FINSHED FLOOR ELEV. WEST OF ROAD

THESE DOCUMENTS ARE FOR BIDDING, CONSTRUCTION, AND ~~PERMIT PURPOSES~~.
DATE: 9/14/04

STATE OF TEXAS
PAUL A. CARLINE
85400
LICENSED
PROFESSIONAL ENGINEER

CITY OF ROCKWALL, TEXAS

AMITY LANE SAN. SEW. IMPROVEMENTS
SAN. SEW. LINE 'SS5' PLAN AND PROFILE
STA 7+00 TO STA. 10+41.09

BIRKHOFF, HENDRICKS & CONWAY, L.L.P.
CONSULTING ENGINEERS
Dallas, Texas

DESIGNED BY: P.A.C.	PROJECT: 2002-104	SHEET NO. 13 OF 19 SHEETS
DRAWN BY: R.J.L.	DATE: SEPTEMBER, 2004	

09/14/04 KAB H:\ROCKWALL\2002104\SHEETS\2002104-SS12-SS8.DWG SCALE: 1=40 XREF: ROCKWALL\2002104\BASE\TOPO-BASE, MASTER SURVEY, SanSewSS1 Rev(2)

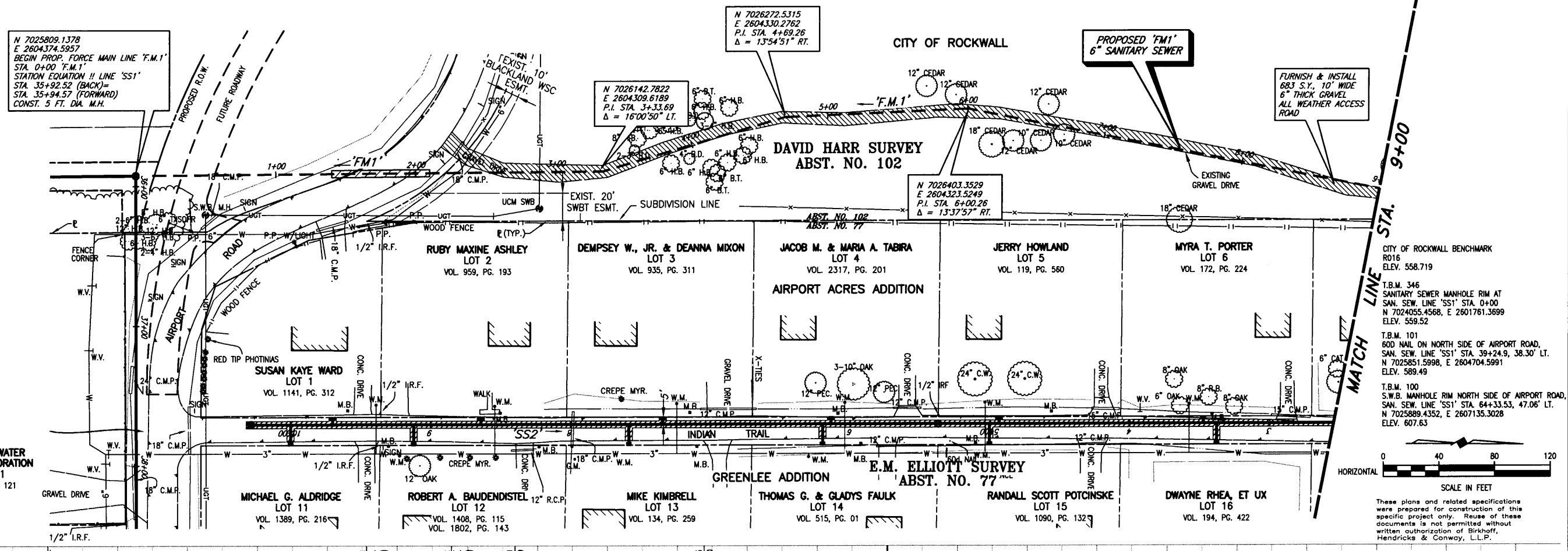

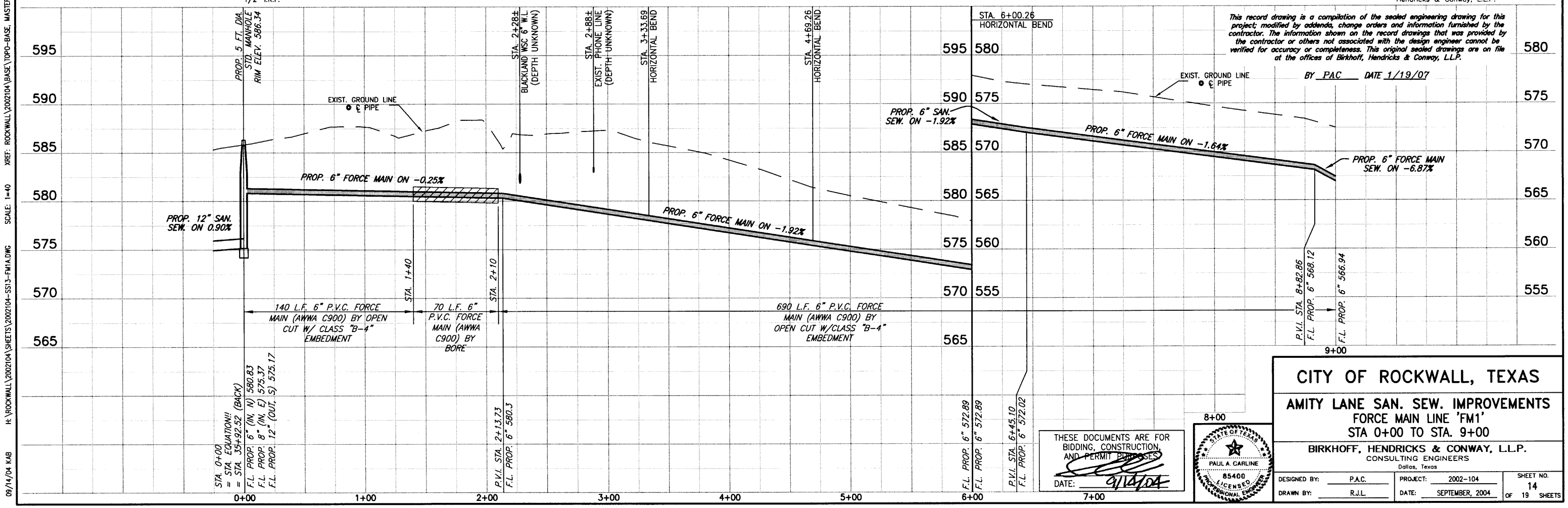

This record drawing is a compilation of the sealed engineering drawing for this project; modified by addenda, change orders and information furnished by the contractor. The information shown on the record drawings that was provided by the contractor or others not associated with the design engineer cannot be verified for accuracy or completeness. This original sealed drawings are on file at the offices of Birkhoff, Hendricks & Conway, L.L.P.

BY PAC DATE 1/19/07

THESE DOCUMENTS ARE FOR BIDDING, CONSTRUCTION, AND PERMIT PURPOSES

DATE: 9/14/04

STATE OF TEXAS
PAUL A. CARLINE
85400
LICENSED
PROFESSIONAL ENGINEER

CITY OF ROCKWALL, TEXAS

AMITY LANE SAN. SEW. IMPROVEMENTS
FORCE MAIN LINE 'FM1'
STA 0+00 TO STA. 9+00

BIRKHOFF, HENDRICKS & CONWAY, L.L.P.
CONSULTING ENGINEERS
Dallas, Texas

DESIGNED BY:	P.A.C.	PROJECT:	2002-104	SHEET NO. 14
DRAWN BY:	R.J.L.	DATE:	SEPTEMBER, 2004	OF 19 SHEETS

09/14/04 KAB H:\ROCKWALL\2002104\SHEETS\2002104-SS13-FM1A.DWG SCALE: 1=40 XREF: ROCKWALL\2002104\BASE\TOPO-BASE, MASTER SURVEY, SanSewSS1 Rev(2)

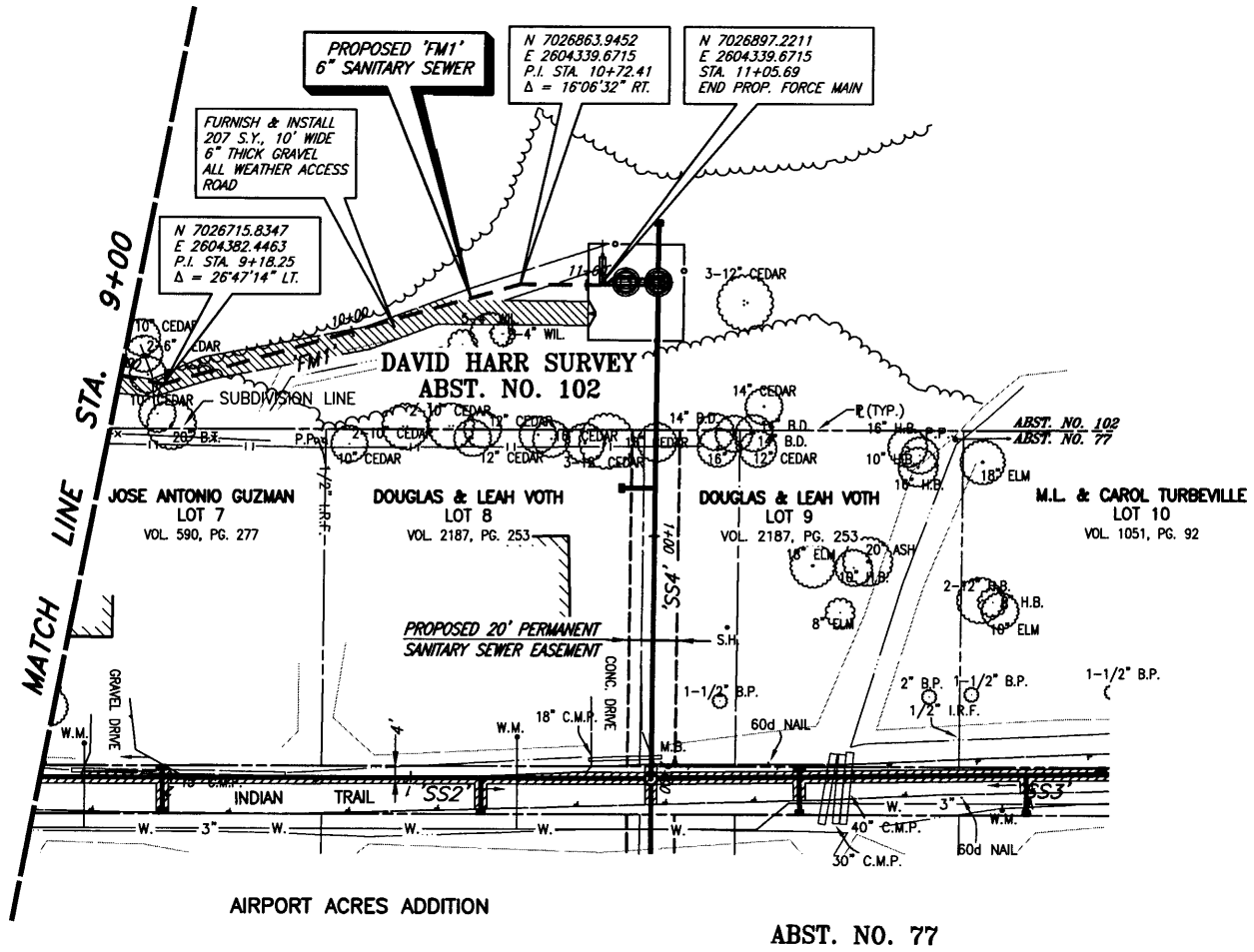

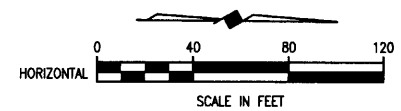

CITY OF ROCKWALL BENCHMARK
R016
ELEV. 558.719

T.B.M. 346
SANITARY SEWER MANHOLE RIM AT
SAN. SEW. LINE 'SS1' STA. 0+00
N 7024055.4568, E 2601761.3699
ELEV. 559.52

T.B.M. 101
60D NAIL ON NORTH SIDE OF AIRPORT ROAD,
SAN. SEW. LINE 'SS1' STA. 39+24.9, 38.30' LT.
N 7025851.5998, E 2604704.5991
ELEV. 589.49

T.B.M. 100
S.W.B. MANHOLE RIM NORTH SIDE OF AIRPORT ROAD,
SAN. SEW. LINE 'SS1' STA. 64+33.53, 47.06' LT.
N 7025889.4352, E 2607135.3028
ELEV. 607.63

This record drawing is a compilation of the sealed engineering drawing for this project; modified by addenda, change orders and information furnished by the contractor. The information shown on the record drawings that was provided by the contractor or others not associated with the design engineer cannot be verified for accuracy or completeness. This original sealed drawings are on file at the offices of Birkhoff, Hendricks & Conway, L.L.P.

BY PAC DATE 1/19/07

These plans and related specifications were prepared for construction of this specific project only. Reuse of these documents is not permitted without written authorization of Birkhoff, Hendricks & Conway, L.L.P.

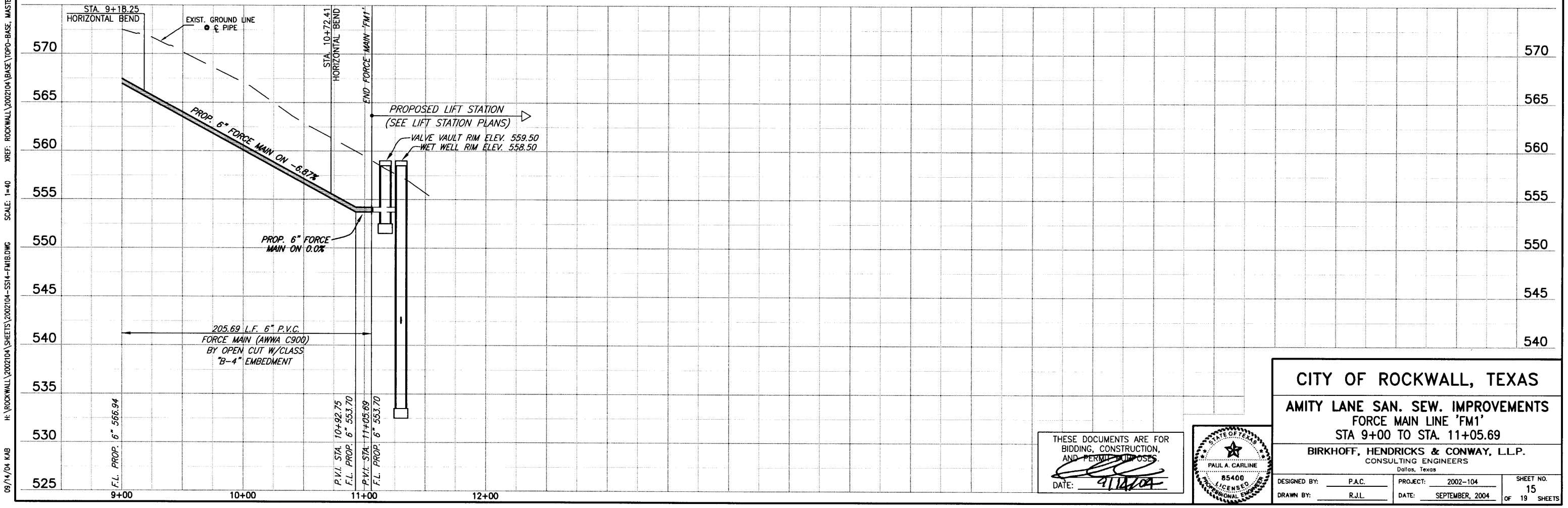

THESE DOCUMENTS ARE FOR BIDDING, CONSTRUCTION, AND PERMIT PURPOSES.
DATE: 9/14/04

STATE OF TEXAS
PAUL A. CARLINE
85400
LICENSED
PROFESSIONAL ENGINEER

CITY OF ROCKWALL, TEXAS

AMITY LANE SAN. SEW. IMPROVEMENTS
FORCE MAIN LINE 'FM1'
STA 9+00 TO STA. 11+05.69

BIRKHOFF, HENDRICKS & CONWAY, L.L.P.
CONSULTING ENGINEERS
Dallas, Texas

DESIGNED BY: P.A.C.	PROJECT: 2002-104	SHEET NO. 15 OF 19 SHEETS
DRAWN BY: R.J.L.	DATE: SEPTEMBER, 2004	

09/14/04 KAB H:\ROCKWALL\2002104\SHEETS\2002104-SS14-FM18.DWG SCALE: 1=40 XREF: ROCKWALL\2002104\BASE\TOPO-BASE, MASTER SURVEY, SanSewSS1 Rev(2)

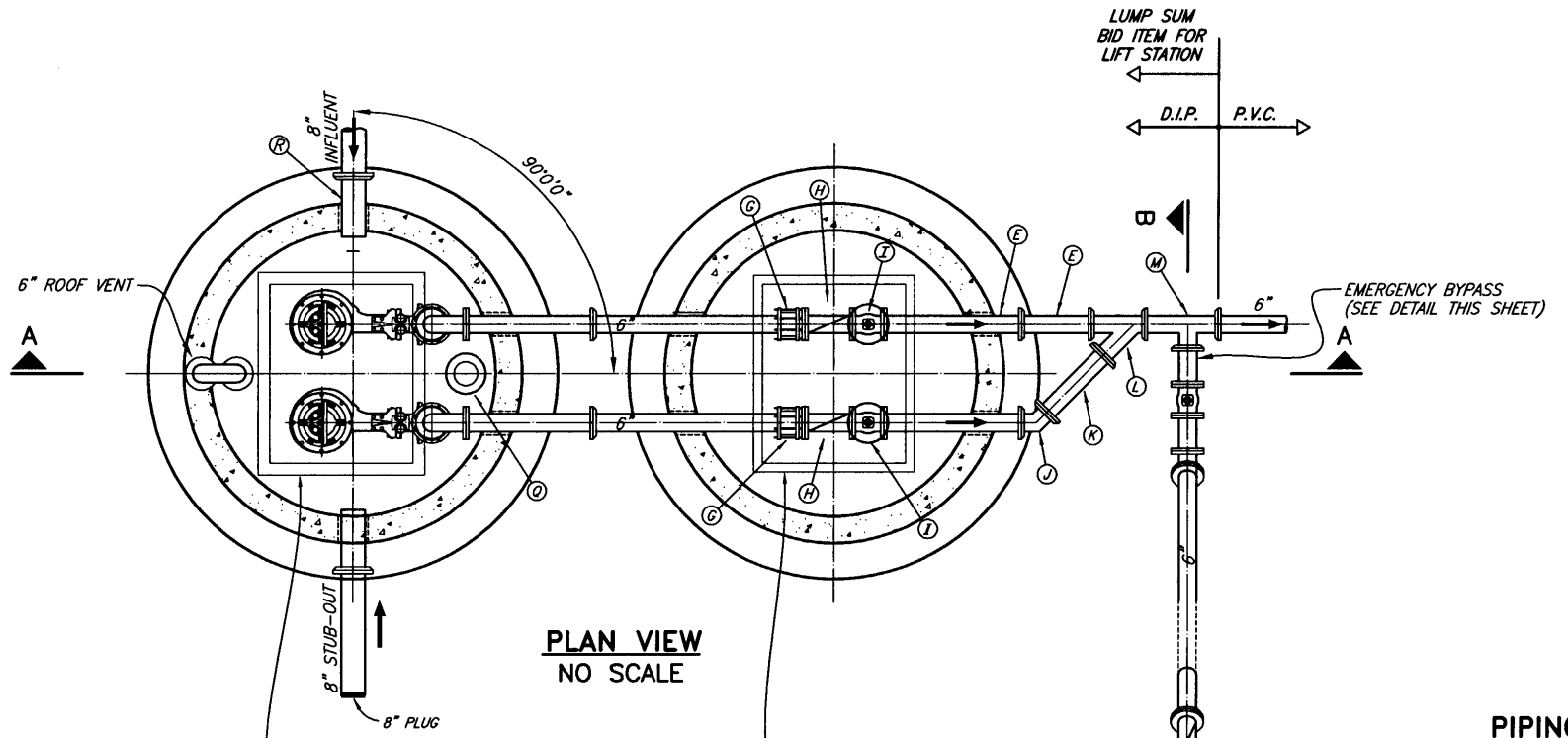

PLAN VIEW
NO SCALE

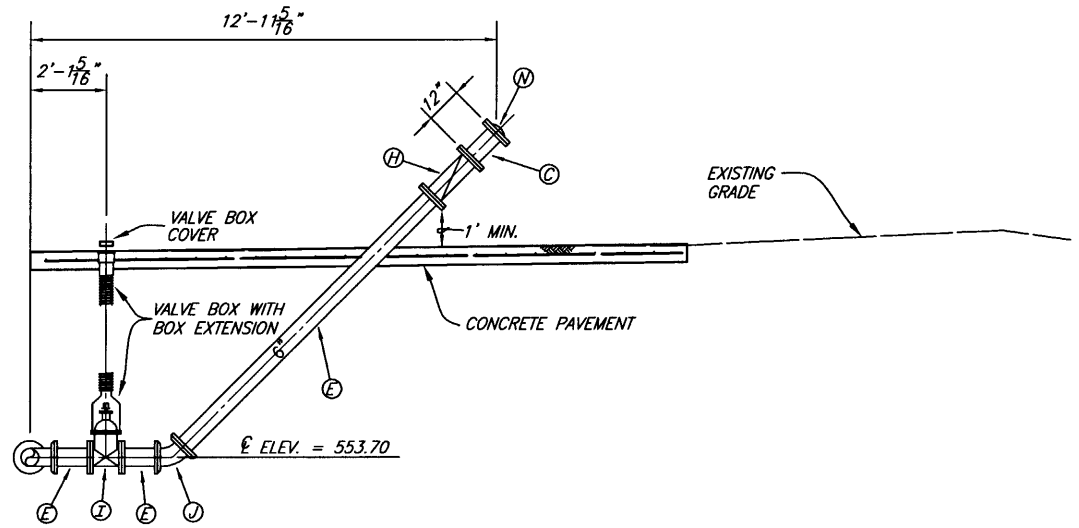

PIPING SECTION B–B EMERGENCY BYPASS DETAIL

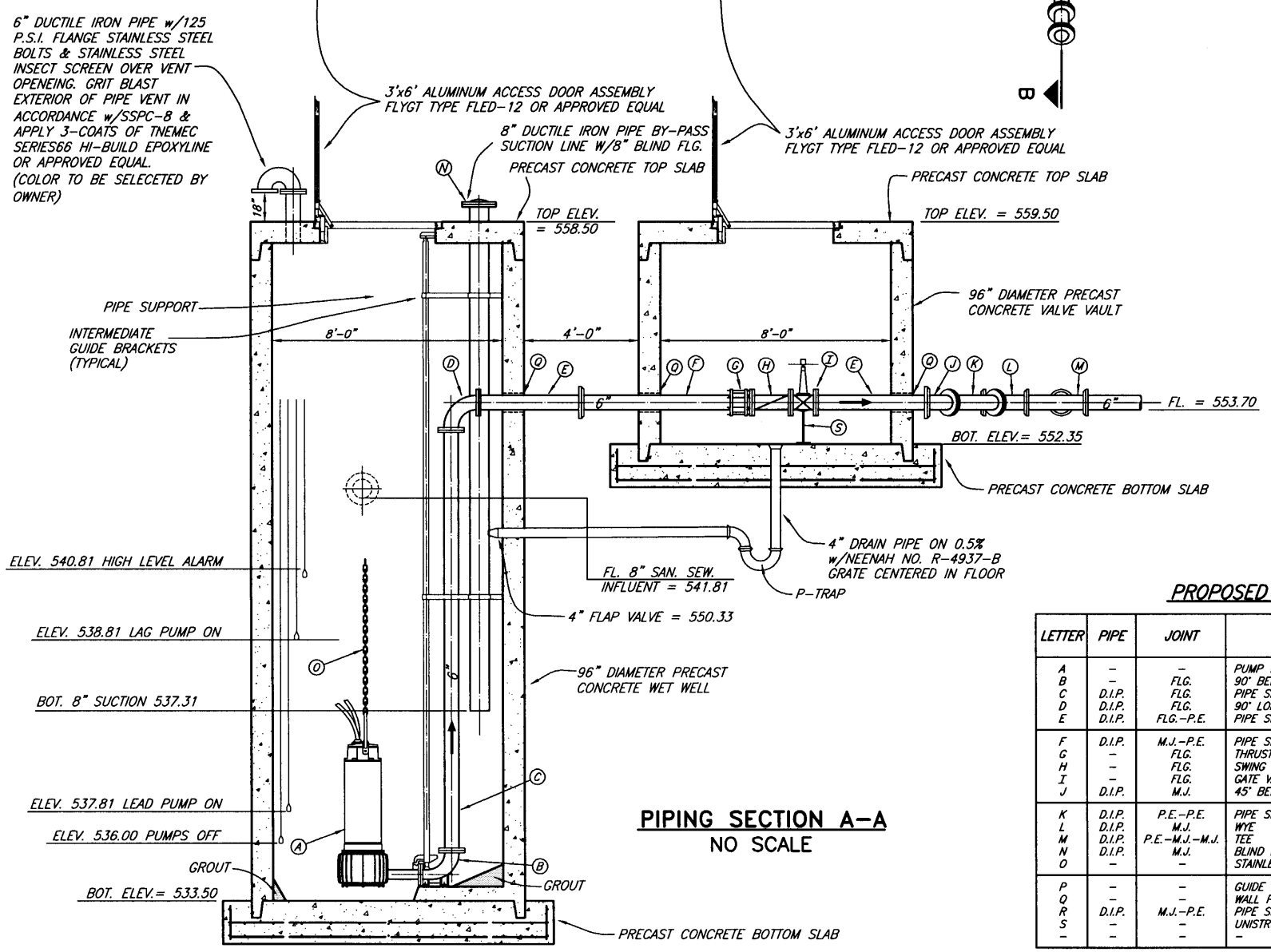

PIPING SECTION A–A
NO SCALE

PROPOSED LEGEND

LETTER	PIPE	JOINT	DESCRIPTION
A	–	–	PUMP W/ MOTOR
B	–	FLG.	90° BEND (BY PUMP MFG.)
C	D.I.P.	FLG.	PIPE SPOOL
D	D.I.P.	FLG.	90° LONG RADIUS BEND
E	D.I.P.	FLG.–P.E.	PIPE SPOOL
F	D.I.P.	M.J.–P.E.	PIPE SPOOL
G	–	FLG.	THRUST HARNESS
H	–	FLG.	SWING CHECK VALVE W/ LEVER & WEIGHT
I	–	FLG.	GATE VALVE (WHEEL OPERATED)
J	D.I.P.	M.J.	45° BEND
K	D.I.P.	P.E.–P.E.	PIPE SPOOL
L	D.I.P.	M.J.	WYE
M	D.I.P.	P.E.–M.J.–M.J.	TEE
N	D.I.P.	M.J.	BLIND FLANGE
O	–	–	STAINLESS STEEL LIFTING CHAIN
P	–	–	GUIDE BAR
Q	–	–	WALL PIPE
R	D.I.P.	M.J.–P.E.	PIPE SPOOL
S	–	–	UNISTRUT PIPE SUPPORT
–	–	–	–

This record drawing is a compilation of the sealed engineering drawing for this project; modified by addenda, change orders and information furnished by the contractor. The information shown on the record drawings that was provided by the contractor or others not associated with the design engineer cannot be verified for accuracy or completeness. This original sealed drawings are on file at the offices of Birkhoff, Hendricks & Conway, L.L.P.

BY PAC DATE 1/19/07

These plans and related specifications were prepared for construction of this specific project only. Reuse of these documents is not permitted without written authorization of Birkhoff, Hendricks, & Conway, L.L.P.

THESE DOCUMENTS ARE FOR BIDDING, CONSTRUCTION, AND PERMIT PURPOSES.
DATE: 9/14/04

STATE OF TEXAS
PAUL A. CARLINE
85400
LICENSED
PROFESSIONAL ENGINEER

CITY OF ROCKWALL, TEXAS

AMITY LANE SAN. SEW. IMPROVEMENTS
INDIAN TRAIL LIFT STATION

BIRKHOFF, HENDRICKS & CONWAY, L.L.P.
CONSULTING ENGINEERS
Dallas, Texas

DESIGNED BY: P.A.C.	PROJECT: 2002-104	SHEET NO. 16 OF 19 SHEETS
DRAWN BY: R.J.L.	DATE: SEPTEMBER, 2004	

09/14/04 KAB H:\ROCKWALL\2002104\SHEETS\2002104-SS15-LS1.DWG XREF: ROCKWALL\2002104\BASE\TOPO-BASE XREF: ROCKWALL\2002104\PROFILES

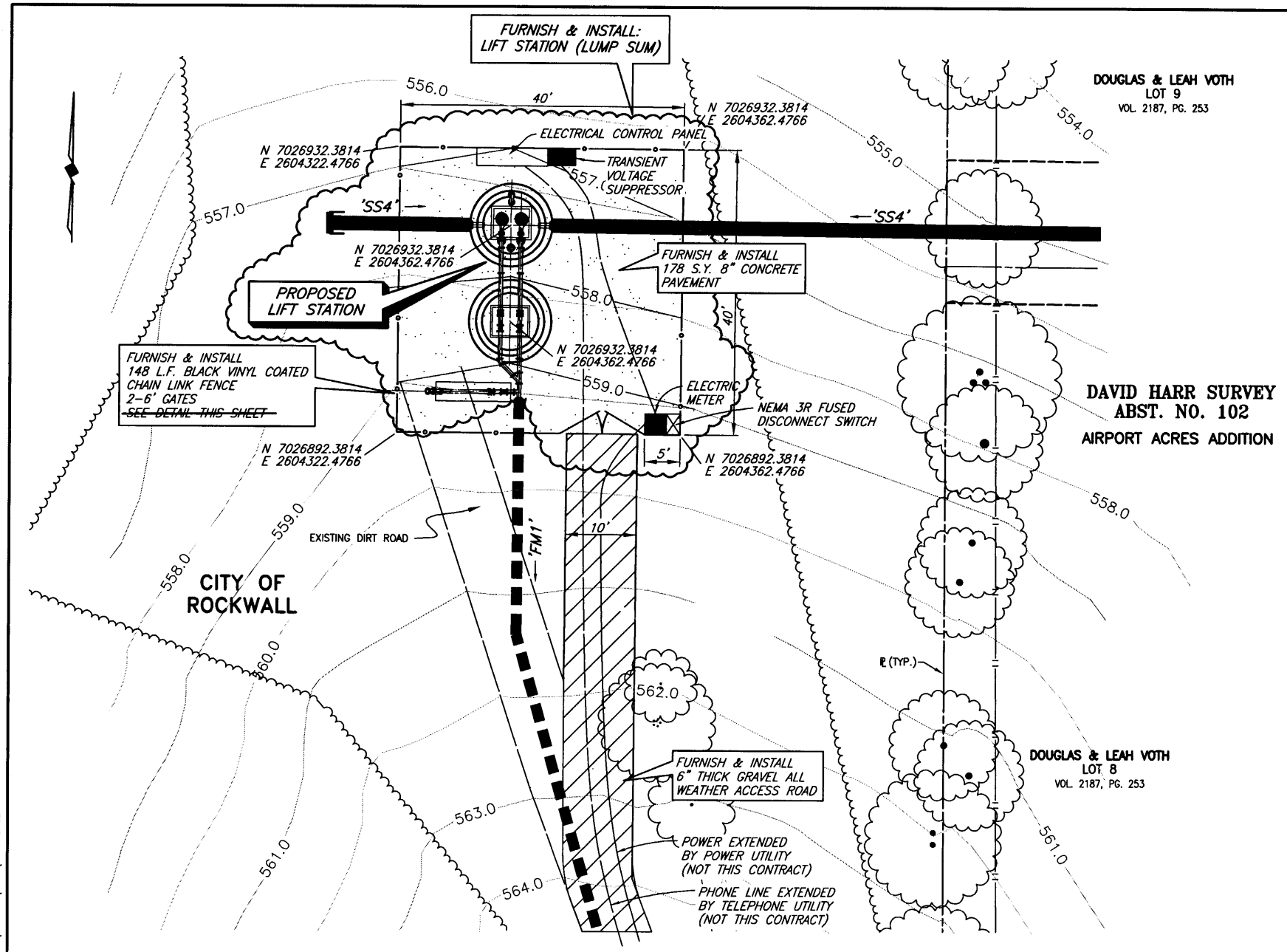

LIFT STATION SITE PLAN

GENERAL NOTES

1. IN ORDER TO PREVENT SHEARING WITHIN THE BACKFILL AREAS, THE DISCHARGE PIPING SHALL BE DUCTILE IRON FROM THE LIFT STATION, THROUGH THE VALVE VAULT.
2. ALL DUCTILE IRON PIPING SHALL BE ANSI/AWWA C115. FITTINGS SHALL BE ANSI/AWWA C110 DUCTILE IRON, FLANGED, STANDARD THICKNESS. JOINTS SHALL BE ANSI/AWWA C111, MECHANICAL JOINT. PIPE AND FITTINGS SHALL HAVE INTERNAL AND EXTERNAL EPOXY COATINGS. ALL BURIED DUCTILE IRON PIPING SHALL ALSO BE POLYETHELENE ENCASED IN ACCORDANCE WITH AWWA C105.
3. ALL DUCTILE IRON PIPING SHALL BE LINED WITH TWO 8.0 MIL COATS (16 MIL TOTAL DFT) OF TNEMEC SERIES 164 COLOR EPOXOLINE 80 OR APPROVED EQUAL.
4. ALL EXPOSED METALLIC PIPE (NON-GALVANIZED, NON-STAINLESS STEEL OR NON-ALUMINUM) AND FITTINGS WITHIN THE WET WELL AND VALVE VAULT SHALL BE COATED WITH A MINIMUM OF TWO 6.0 MIL COATS (12 MILS TOTAL DFT) OF DEVOE BAR-RUST 233H HIGH PERFORMANCE EPOXY COATING OR APPROVED EQUAL.
5. ALL ELECTRCAL JUNCTION BOXES SHALL BE LOCATED OUTSIDE OF THE WET WELL BETWEEN THE CONTROL PANEL AND THE WET WELL. A SEAL COUPLING MAY BE USED IN LIEU OF A JUNCTION BOX, HOWEVER IT MUST BE LOCATED BETWEEN THE CONTROL PANEL AND WET WELL. ALL COMPONENTS WITHIN THE WET WELL SHALL BE EXPLOSION-PROOF.
6. WHERE PIPES OR CONDUIT PASS THROUGH THE WALL OF THE WET WELL, THE SPACE BETWEEN THE WET WELL AND THE PIPE SHALL BE SEALED WITH LINK SEALS.
7. THE FOUNDATION OF THE WET WELL SHALL REST ON UNDISTURBED SOIL. OVER EXCAVATION OF THE WET WELL FOUNDATION SHALL BE FILLED WITH 2,500 PSI CONCRETE TO THE ELEVATION SHOWN ON THE PLANS FOR THE BOTTOM OF THE WET WELL FOUNDATION.
8. CONTRACTOR SHALL GROUT OPENINGS FOR ACCESS FRAMES AND WET WELL BOTTOM AS SHOWN. ALL GROUT SHALL BE NON-SHRINK AND BE COMPATIBLE WITH SPECIFIED COATINGS. CONFIGURE GROUT IN WET WELL BOTTOM PER PUMP MANUFACTURERS RECOMMENDATION.
9. COMPLETELY RESTRAIN ALL JOINTS FOR PIPE, BENDS, TEES AND FITTINGS ON THE FORCE MAIN PIPING WITHIN THE LIFT STATION SITE AND WITHIN 100 FEET OUTSIDE OF THE LIFT STATION FENCE.
10. NEMA 4X DUPLEX PUMP CONTROL PANEL SHALL ALTERNATE PUMP STARTING SEQUENCE, INTERFACE WITH LIQUID LEVEL SENSORS, CONTAIN MAIN DISCONNECT SWITCH, PILOT LIGHTS, RUN TIME METERS, HIGH LEVEL/PUMP FAIL ALARM HORN, BATTERY BACK-UP, AUTO DIALER AND UNDERWRITERS LABORATORY APPROVAL LABEL. PUMP CONTROLLER SHALL BE MANUFACTURED BY ITT FLYGT.
11. PRECAST WET-WELL AND VALVE VAULT SHALL BE A MINIMUM OF 4,000 PSI CONCRETE. WALL THICKNESS SHALL MEET OR EXCEED THE MINIMUMS SHOWN. MANUFACTURER SHALL VERIFY WALL THICKNESSES AND PROVIDE ADEQUATE REINFORCING FOR PROPOSED DEPTHS. CONTRACTOR SHALL PROVIDE SHOP DRAWINGS OF THE PROPOSED STRUCTURES SEALED AND SIGNED BY A TEXAS LICENSED PROFESSIONAL ENGINEER TO BIRKHOFF, HENDRICKS & CONWAY, L.L.P. FOR REVIEW.
12. BACKFILL AROUND THE WET WELL AND VALVE VAULT SHALL BE COMPACTED TO 95% STANDARD PROCTOR AT +/-3% OF OPTIMUM MOISTURE.
13. ALL CONCRETE AND GROUT SURFACES INSIDE THE WET WELL SHALL BE COATED WITH A 6.0 MIL DFT PRIME COAT OF TNEMEC SERIES 201 EPOXOPRIME, 1.25 MIL DFT COAT OF TNEMEC SERIES 434 CHEMBLOCK H2S, AND A 16 MIL DFT TOP COAT OF TNEMEC 435 CHEMGEL. ALL CONCRETE AND GROUT SHALL HAVE A MINIMUM OF 28 DAYS CURE TIME PRIOR TO COATING APPLICATION. ABRASIVE BLAST ALL SURFACES TO SSPC-SP13/NACE 6 PRIOR TO COATING APPLICATION. FOLLOW MANUFACTURERS PUBLISHED APPLICATION INSTRUCTIONS INCLUDING THOSE FOR SURFACE REPAIR PRIOR TO COATING.
14. WET WELL AND VALVE SHALL HAVE WATER TIGHT JOINTS (O-RING OR APPROVED EQUAL). INTERIOR AND EXTERIOR SIDES OF JOINTS SHALL BE SEALED WITH NON-SHRINK GROUT.
15. LUMP SUM BID ITEM FOR LIFT STATION IN BID SCHEDULE SHALL INCLUDE ALL LIFT STATION EQUIPMENT, MATERIALS, LABOR, ELECTRICAL WORK, ETC. IN FENCED AREA SHOWN ON LIFT STATION SITE PLAN. THIS INCLUDED THE FENCE, GATES, CONCRETE PAVEMENT, ETC. LUMP SUM BID ITEM INCLUDES A COMPLETE OPERATIONAL LIFT STATION AS SPECIFIED IN THESE PLANS AND SPECIFICATIONS.
16. CONTRACTOR SHALL COORDINATE LOCATION OF PUMPS, HATCHES AND ALL APPURTENANCES WITH ITT FLYGT.
17. ALL ELECTRICAL WORK SHALL BE IN ACCORDANCE WITH NEC, LOCAL AND NATIONAL CODES.
18. PUMP CONTROL PANEL SHALL BE "CITY OF ROCKWALL STANDARD" MANUFACTURED BY ITT FLYGT.

This record drawing is a compilation of the sealed engineering drawing for this project; modified by addenda, change orders and information furnished by the contractor. The information shown on the record drawings that was provided by the contractor or others not associated with the design engineer cannot be verified for accuracy or completeness. This original sealed drawings are on file at the offices of Birkhoff, Hendricks & Conway, L.L.P.

BY PAC DATE 1/19/07

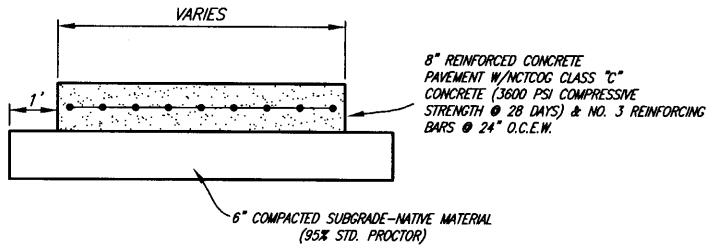

CONCRETE PAVEMENT DETAIL

PUMP SCHEDULE

PUMP NO.	MANUFACTURER, MODEL, IMPELLER	PUMP EFFICIENCY (%)	G.P.M. (EA.)	PRESSURE (FT. HD.)	DISCHARGE SIZE (IN.)	VOLTS	PHASE	RPM	HP (EA.)
1	FLYGT CP3127.180, HT, 217mm IMPELLER	83.59%	289	54.4	4"	460	3	1735	10
2	FLYGT CP3127.180, HT, 217mm IMPELLER	83.59%	289	54.4	4"	460	3	1735	10

1. SUBMERSIBLE SEWAGE TYPE w/RAIL RETRIEVAL SYSTEM AND FLOAT CONTROL.
2. SCHEDULED NUMBERS FOR PUMP WFFICIENCY, G.P.M. AND PRESSURE REFLECT ONE PUMP IN OPERATION.
3. PUMPS AND MOTORS SHALL BE EXPLOSION PROOF.

CITY OF ROCKWALL BENCHMARK
R016
ELEV. 558.719

T.B.M. 346
SANITARY SEWER MANHOLE RIM AT
SAN. SEW. LINE 'SS1' STA. 0+00
N 7024055.4568, E 2601761.3699
ELEV. 559.52

T.B.M. 101
60D NAIL ON NORTH SIDE OF AIRPORT ROAD,
SAN. SEW. LINE 'SS1' STA. 39+24.9, 38.30' LT.
N 7025851.5998, E 2604704.5991
ELEV. 589.49

T.B.M. 100
S.W.B. MANHOLE RIM NORTH SIDE OF AIRPORT ROAD,
SAN. SEW. LINE 'SS1' STA. 64+33.53, 47.06' LT.
N 7025889.4352, E 2607135.3028
ELEV. 607.63

HORIZONTAL 0 10 20 30
SCALE IN FEET

These plans and related specifications were prepared for construction of this specific project only. Reuse of these documents is not permitted without written authorization of Birkhoff, Hendricks & Conway, L.L.P.

THESE DOCUMENTS ARE FOR BIDDING, CONSTRUCTION, AND ~~PERMIT PURPOSES~~.
DATE: 9/14/04

STATE OF TEXAS
PAUL A. CARLINE
85400
LICENSED PROFESSIONAL ENGINEER

CITY OF ROCKWALL, TEXAS

AMITY LANE SAN. SEW. IMPROVEMENTS
INDIAN TRAIL LIFT STATION SITE PLAN
MISCELLANEOUS DETAILS

BIRKHOFF, HENDRICKS & CONWAY, L.L.P.
CONSULTING ENGINEERS
Dallas, Texas

DESIGNED BY: P.A.C.	PROJECT: 2002-104	SHEET NO. 17 OF 19 SHEETS
DRAWN BY: R.J.L.	DATE: SEPTEMBER, 2004	

09/14/04 KAB H:\ROCKWALL\2002104\SHEETS\2002104-SS16-LS2.DWG SCALE: 1=40 XREF: ROCKWALL\2002104\BASE\TOPO-BASE

STANDARD SEWER NOTES

1. SEWER LINES SHALL BE CONSTRUCTED IN ACCORDANCE WITH THE CURRENT CITY OF ROCKWALL, SPECIFICATIONS AND CODES.
2. FOR OPEN CUT SEWER REPLACEMENT, DETECTABLE TRACER (TERRA TAPE OR APPROVED EQUIVALENT) SHALL BE LAID WITH PVC PIPE AND CONNECTED TO ALL FITTINGS. TAPE SHALL BE LAID 6" ABOVE THE TOP OF PIPE, THE BACKFILL MATERIAL, OR ON TOP OF SAND BACKFILL.
3. SANITARY SEWER PIPE SHALL BE SDR-35 PVC UNLESS OTHERWISE SHOWN ON THE PLANS OR APPROVED BY THE CITY ENGINEER. IN SIZES OVER 15" IN DIAMETER, THE TYPE OF MATERIAL SHALL BE AS SPECIFIED IN THE PLANS.
4. MANHOLE FRAMES AND 24" DIAMETER COVER WITH THE "CITY OF ROCKWALL" AS MANUFACTURED BY THE VULCAN FOUNDRY, INC.-CATALOG NO. V-1342, BASS AND HAYS FOUNDRY-CATALOG NO. 300-24, OR APPROVED EQUAL SHALL BE FURNISHED FOR ALL SANITARY SEWER MANHOLES. THIS FRAME AND COVER IS STOCKED BY SEVERAL SUPPLIERS IN THIS AREA.
5. CLASS "C" CONC. (3600 PSI AT 28 DAYS) OR PRECAST REINF. CONC. SHALL BE USED FOR ALL MANHOLES.
6. USE ONLY A NON-SHEAR COUPLING FOR PIPE CONNECTIONS.
7. WHEN THE TRENCH SAFETY EXCEEDS 5 FEET IN DEPTH, THE CONTRACTOR SHALL MEET OR OR EXCEED THE O.S.H.A. STANDARDS FOR TRENCH SAFETY.

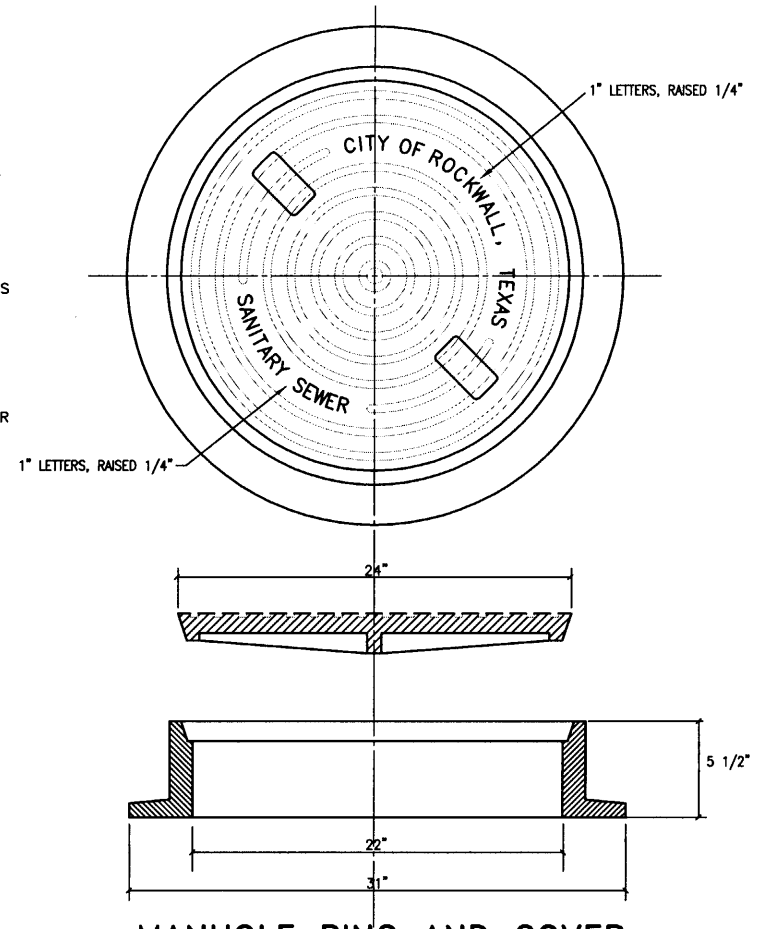

MANHOLE RING AND COVER

WITH LOCKING DEVICE & PICK SLOTS

BASS AND HAYES FOUNDRY, INC.
TRAFFIC BEARING MANHOLE: 400-24
NON TRAFFIC BEARING MANHOLES: 300-24

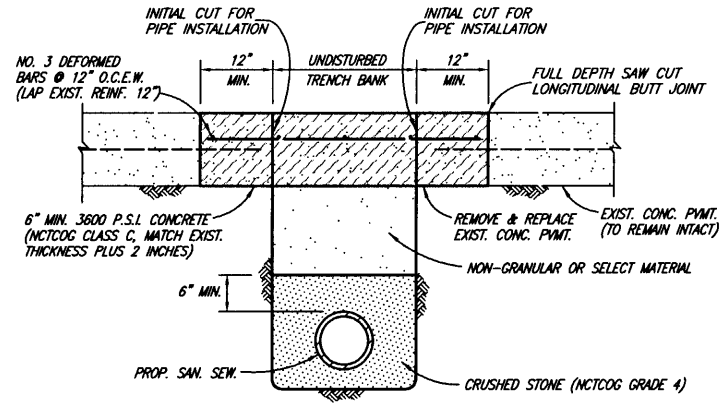

CONCRETE STREET OR DRIVEWAY REPAIR

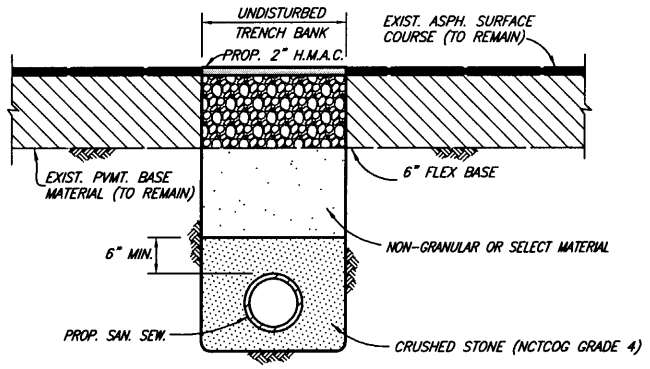

ASPHALT STREET OR DRIVEWAY REPAIR

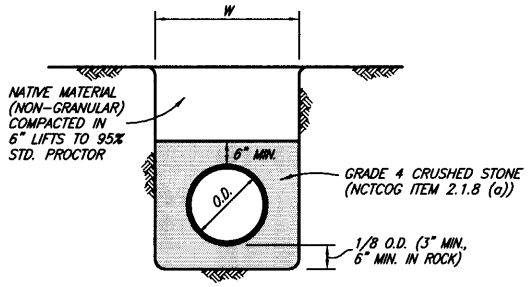

CLASS H EMBEDMENT

(GRAVITY SEWER)

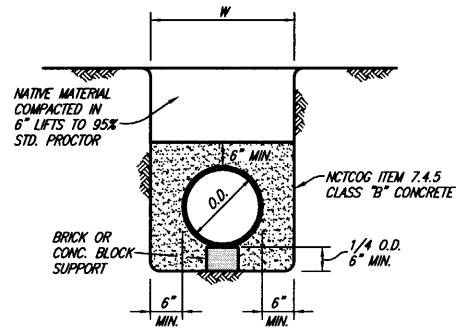

CLASS G EMBEDMENT

CONCRETE ENCASEMENT

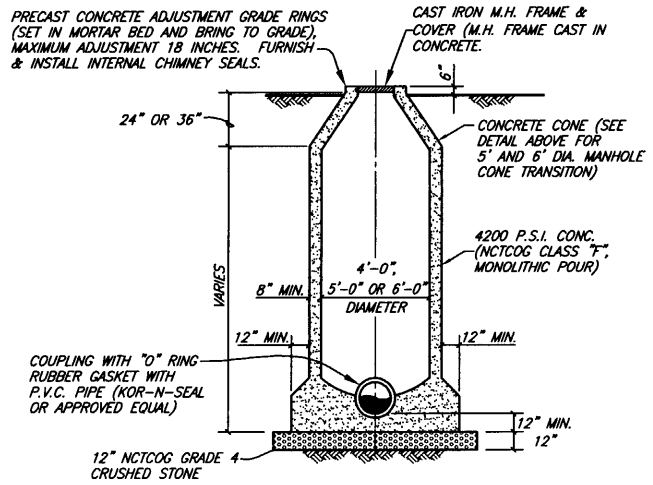

STANDARD MANHOLE ELEVATION

4', 5' & 6' DIAMETER MANHOLES

SANITARY SEWER MANHOLE (CAST IN PLACE)

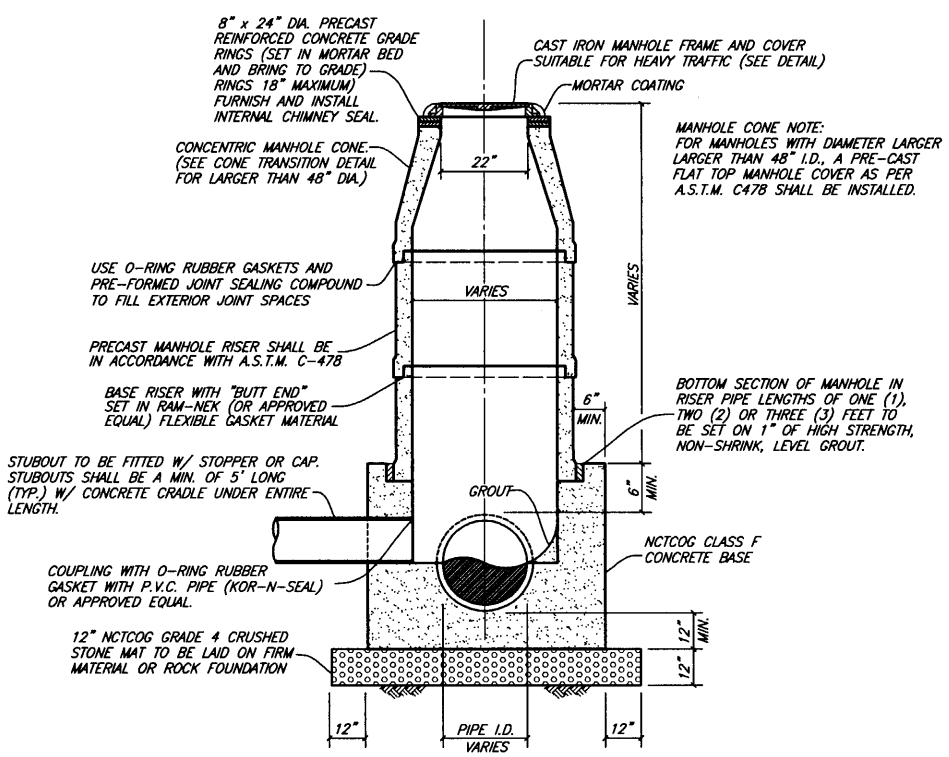

PRECAST CONCRETE MANHOLE

NOTE:
ALL JOINTS IN PRECAST MANHOLE SHALL BE SEALED ON OUTSIDE OF MANHOLE WITH AQUAGARD SHRINK SEAL.

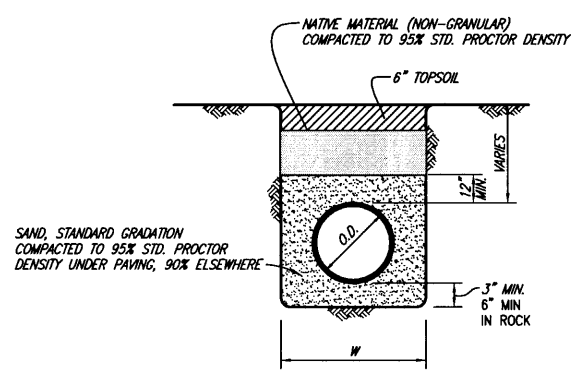

CLASS B-3 EMBEDMENT

(PRESSURE PIPE)

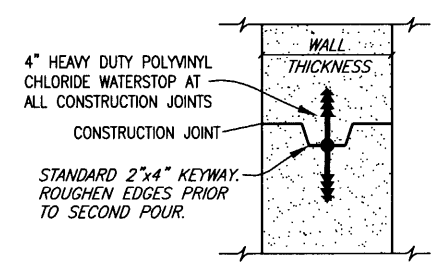

MANHOLE CONSTRUCTION JOINT

KEYWAY WITH WATERSTOP

This record drawing is a compilation of the sealed engineering drawing for this project; modified by addenda, change orders and information furnished by the contractor. The information shown on the record drawings that was provided by the contractor or others not associated with the design engineer cannot be verified for accuracy or completeness. This original sealed drawings are on file at the offices of Birkhoff, Hendricks & Conway, L.L.P.

BY PAC DATE 1/19/07

These plans and related specifications were prepared for construction of this specific project only. Reuse of these documents is not permitted without written authorization of Birkhoff, Hendricks & Conway, L.L.P.

THESE DOCUMENTS ARE FOR BIDDING, CONSTRUCTION, AND PERMIT PURPOSES
DATE: 9/14/07

STATE OF TEXAS
PAUL A. CARLINE
85400
LICENSED
PROFESSIONAL ENGINEER

CITY OF ROCKWALL, TEXAS

AMITY LANE SAN. SEW. IMPROVEMENTS

DETAILS

BIRKHOFF, HENDRICKS & CONWAY, L.L.P.
CONSULTING ENGINEERS
Dallas, Texas

DESIGNED BY: P.A.C.	PROJECT: 2002-104	SHEET NO. 18 OF 19 SHEETS
DRAWN BY: R.J.L.	DATE: SEPTEMBER, 2004	

09/14/04 KAB H:\ROCKWALL\2002104\SHEETS\2002104-SS17-DTL.DWG

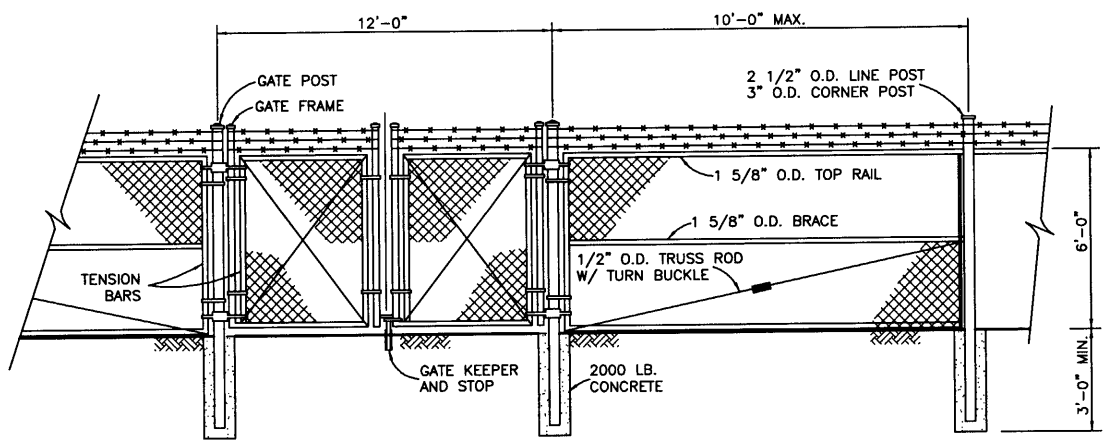

GATE DETAIL

N.T.S.

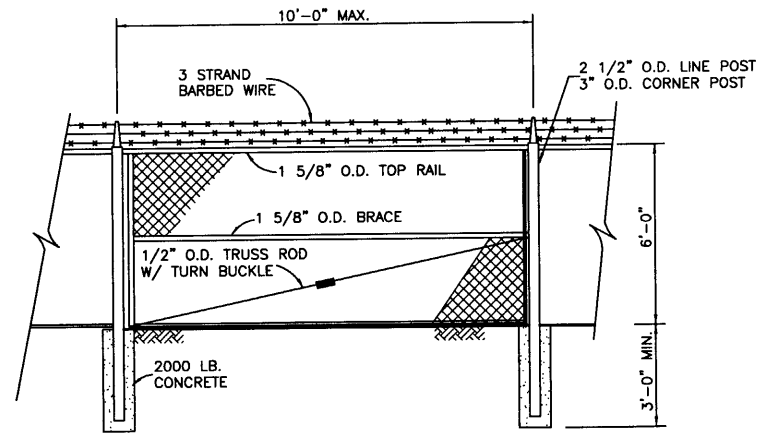

FENCE DETAIL

N.T.S.

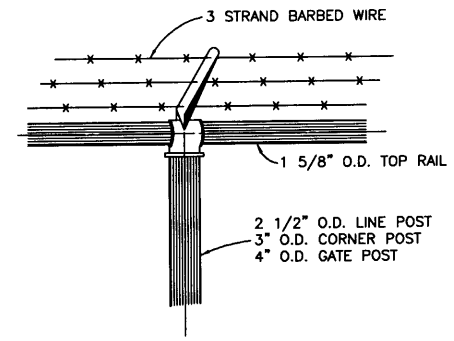

FENCE TOP

N.T.S.

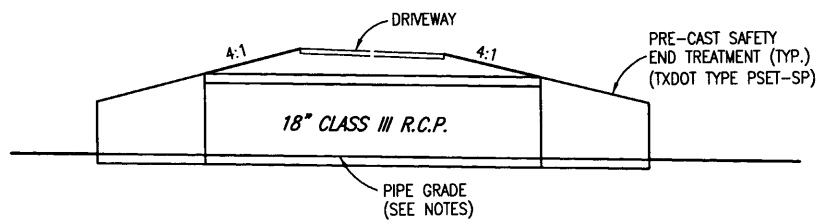

DRIVEWAY CULVERT DETAIL

(INDIAN TRAIL & AMITY LANE ONLY)

NOTES:

1. ALL EXISTING DRIVEWAY CULVERTS LOCATED ALONG AMITY LANE AND INDIAN TRAIL SHALL BE REPLACED WITH 18" CLASS III R.C.P. CULVERTS w/ PRECAST SAFETY END TREATMENT.
2. NEW CULVERTS SHALL MATCH EXISTING CULVERT GRADES. IF EXISTING CULVERT GRADE PREVENTS DRAINAGE THE NEW CULVERT SHALL BE INTALLED TO PROVIDE POSITIVE DRAINAGE.

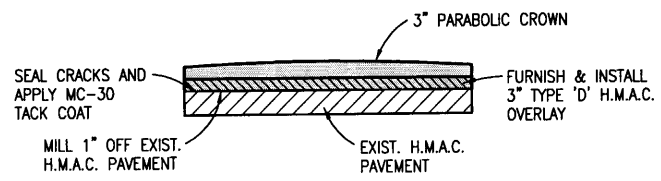

PAVEMENT OVERLAY DETAIL

(INDIAN TRAIL & AMITY LANE ONLY)

NOTES:

1. INDIAN TRAIL AND AMITY LANE SHALL BE OVERLAID FROM AIRPORT ROAD, NORTH TO THE END OF EACH RESPECTIVE STREET.
2. PAVEMENT OVERLAY SHALL COMMENCE ONLY AFTER INSTALLATION AND TESTING OF ALL UNDERGROUND UTILITIES.
3. PAVEMENT OVERLAY SHALL INCLUDE ALL PAVEMENT WITHIN CITY RIGHT-OF-WAY, THIS INCLUDES ALL DRIVEWAY ENTRANCES. OVERLAY SHALL BE TRANSITIONED TO MEET ALL EXISTING DRIVEWAY ENTRANCES.
4. MC-30 TACK COAT SHALL BE APPLIED AFTER CRACKS ARE SEALED. TACK COAT SHALL BE APPLIED AT A RATE OF 0.20 GALLONS PER SQUARE YARD. NO SEPARATE PAYMENT SHALL BE MADE FOR CRACK SEALING OR TACK COAT.

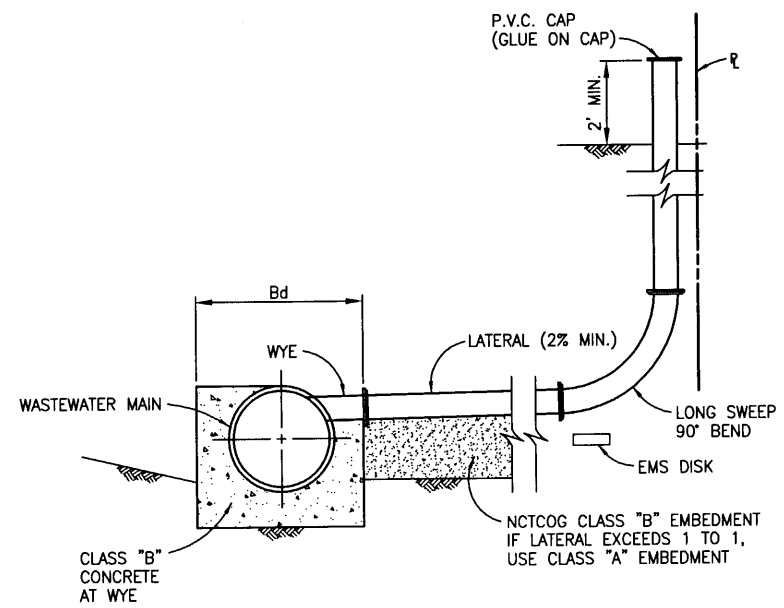

WASTEWATER LATERAL CONNECTION

NO SCALE

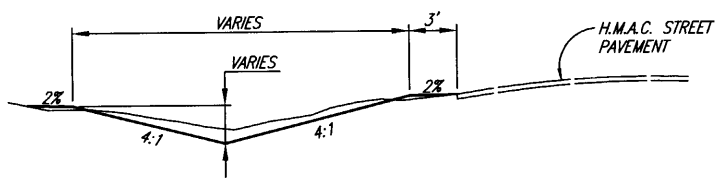

ROADWAY DITCH-TYPICAL SECTION

(INDIAN TRAIL & AMITY LANE ONLY)

NOTES:

1. ALL EXISTING ROADSIDE DITCHES ALONG INDIAN TRAIL AND AMITY LANE SHALL BE RE-GRADED IN ACCORDANCE WITH THE TYPICAL ROADWAY DITCH SECTION, UNLESS OTHERWISE SPECIFIED BY ENGINEER OR CITY OF ROCKWALL.
2. GRADES OF ROADSIDE DITCHES SHALL PROVIDE POSITIVE DRAINAGE.
3. AFTER DITCHES ARE RE-GRADED THEY SHALL BE SOLID BLOCK SODDED. SOD SHALL MATCH EXISTING GRASS TYPE.

This record drawing is a compilation of the sealed engineering drawing for this project; modified by addenda, change orders and information furnished by the contractor. The information shown on the record drawings that was provided by the contractor or others not associated with the design engineer cannot be verified for accuracy or completeness. This original sealed drawings are on file at the offices of Birkhoff, Hendricks & Conway, L.L.P.

BY PAC DATE 1/19/07

These plans and related specifications were prepared for construction of this specific project only. Reuse of these documents is not permitted without written authorization of Birkhoff, Hendricks & Conway, L.L.P.

THESE DOCUMENTS ARE FOR BIDDING, CONSTRUCTION, AND ~~PERMIT PURPOSES.~~

DATE: 9/13/04

STATE OF TEXAS
PAUL A. CARLINE
85400
LICENSED
PROFESSIONAL ENGINEER

CITY OF ROCKWALL, TEXAS

AMITY LANE SAN. SEW. IMPROVEMENTS

DETAILS

BIRKHOFF, HENDRICKS & CONWAY, L.L.P.
CONSULTING ENGINEERS
Dallas, Texas

DESIGNED BY: P.A.C.	PROJECT: 2002-104	SHEET NO. 19 OF 19 SHEETS
DRAWN BY: R.J.L.	DATE: SEPTEMBER, 2004	

09/13/04 KAB H:\ROCKWALL\2002104\SHEETS\2002104-SS18-DT2.DWG SCALE: 1=20

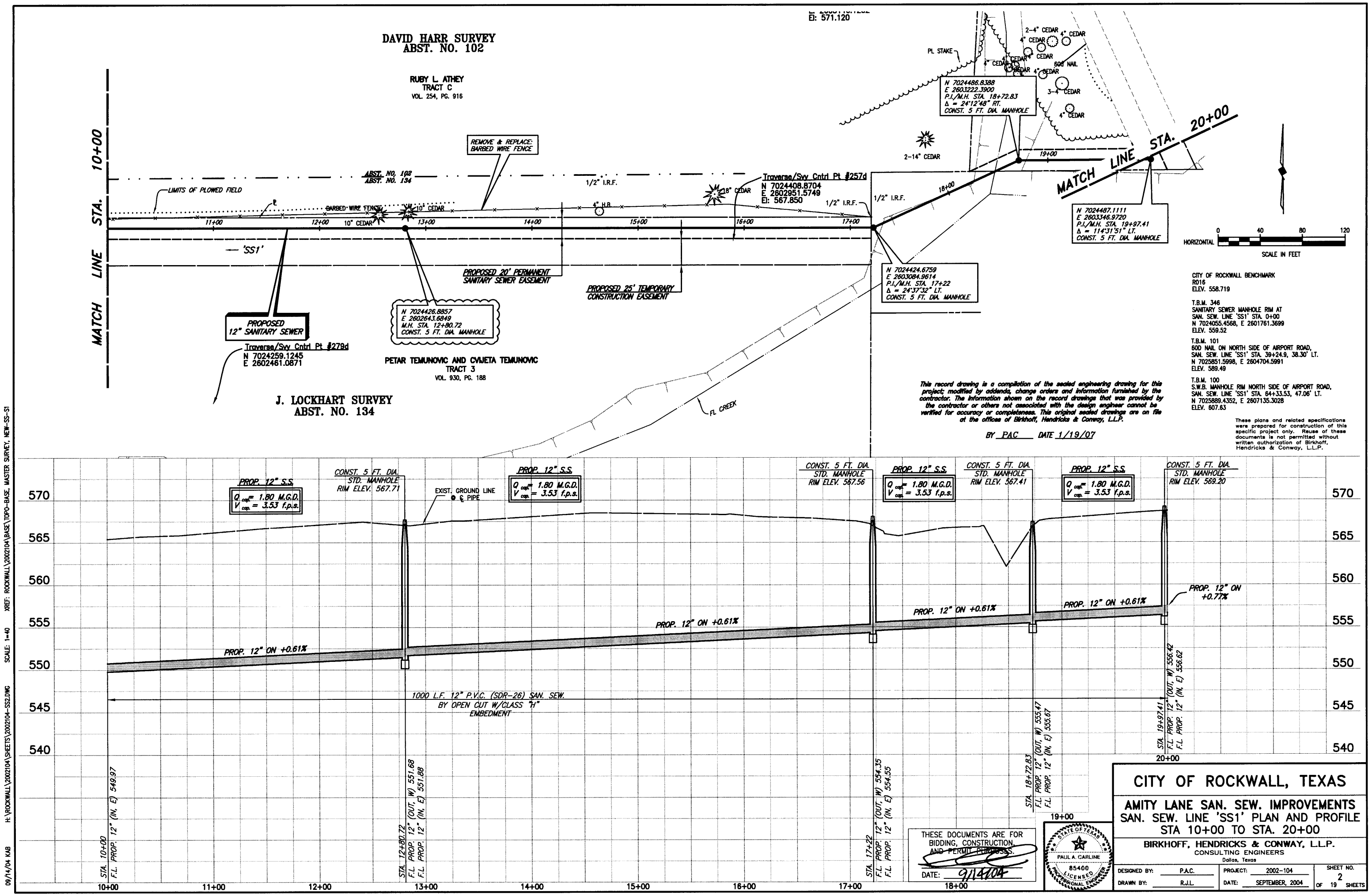
DAVID HARR SURVEY
ABST. NO. 102
RUBY L. ATHEY
TRACT C
VOL. 254, PG. 916
MATCH LINE STA. 10+00
ABST. NO. 102
ABST. NO. 134
LIMITS OF PLOWED FIELD
BARBED WIRE FENCE
10" CEDAR
REMOVE & REPLACE: BARBED WIRE FENCE
1/2" I.R.F.
4" H.B.
28" CEDAR
Traverse/Svy Cntrl Pt #257d
N 7024408.8704
E 2602951.5749
El: 567.850
1/2" I.R.F.
11+00
12+00
13+00
14+00
15+00
16+00
17+00
'SS1'
PROPOSED 20' PERMANENT SANITARY SEWER EASEMENT
PROPOSED 25' TEMPORARY CONSTRUCTION EASEMENT
PROPOSED 12" SANITARY SEWER
Traverse/Svy Cntrl Pt #279d
N 7024259.1245
E 2602461.0871
N 7024426.8857
E 2602643.6849
M.H. STA. 12+80.72
CONST. 5 FT. DIA. MANHOLE
PETAR TEMUNOVIC AND CVIJETA TEMUNOVIC
TRACT 3
VOL. 930, PG. 188
J. LOCKHART SURVEY
ABST. NO. 134
FL CREEK
El: 571.120
PL STAKE
2-4" CEDAR
4" CEDAR
4" CEDAR
4" CEDAR
4" CEDAR
4" CEDAR
4" CEDAR
4" CEDAR
4" CEDAR
60d NAIL
3-4" CEDAR
4" CEDAR
2-14" CEDAR
N 7024486.8388
E 2603222.3900
P.I./M.H. STA. 18+72.83
Δ = 24°12'48" RT.
CONST. 5 FT. DIA. MANHOLE
1/2" I.R.F.
18+00
19+00
MATCH LINE STA. 20+00
N 7024487.1111
E 2603346.9720
P.I./M.H. STA. 19+97.41
Δ = 114°31'51" LT.
CONST. 5 FT. DIA. MANHOLE
N 7024424.6759
E 2603084.9614
P.I./M.H. STA. 17+22
Δ = 24°37'32" LT.
CONST. 5 FT. DIA. MANHOLE
HORIZONTAL
0 40 80 120
SCALE IN FEET
CITY OF ROCKWALL BENCHMARK
R016
ELEV. 558.719
T.B.M. 346
SANITARY SEWER MANHOLE RIM AT
SAN. SEW. LINE 'SS1' STA. 0+00
N 7024055.4568, E 2601761.3699
ELEV. 559.52
T.B.M. 101
60D NAIL ON NORTH SIDE OF AIRPORT ROAD,
SAN. SEW. LINE 'SS1' STA. 39+24.9, 38.30' LT.
N 7025851.5998, E 2604704.5991
ELEV. 589.49
T.B.M. 100
S.W.B. MANHOLE RIM NORTH SIDE OF AIRPORT ROAD,
SAN. SEW. LINE 'SS1' STA. 64+33.53, 47.06' LT.
N 7025889.4352, E 2607135.3028
ELEV. 607.63
This record drawing is a compilation of the sealed engineering drawing for this project; modified by addenda, change orders and information furnished by the contractor. The information shown on the record drawings that was provided by the contractor or others not associated with the design engineer cannot be verified for accuracy or completeness. This original sealed drawings are on file at the offices of Birkhoff, Hendricks & Conway, L.L.P.
BY PAC DATE 1/19/07
These plans and related specifications were prepared for construction of this specific project only. Reuse of these documents is not permitted without written authorization of Birkhoff, Hendricks & Conway, L.L.P.
570
565
560
555
550
545
540
PROP. 12" S.S.
Q cap. = 1.80 M.G.D.
V cap. = 3.53 f.p.s.
CONST. 5 FT. DIA. STD. MANHOLE RIM ELEV. 567.71
EXIST. GROUND LINE @ ℄ PIPE
PROP. 12" S.S.
Q cap. = 1.80 M.G.D.
V cap. = 3.53 f.p.s.
CONST. 5 FT. DIA. STD. MANHOLE RIM ELEV. 567.56
PROP. 12" S.S.
Q cap. = 1.80 M.G.D.
V cap. = 3.53 f.p.s.
CONST. 5 FT. DIA. STD. MANHOLE RIM ELEV. 567.41
PROP. 12" S.S.
Q cap. = 1.80 M.G.D.
V cap. = 3.53 f.p.s.
CONST. 5 FT. DIA. STD. MANHOLE RIM ELEV. 569.20
PROP. 12" ON +0.61%
PROP. 12" ON +0.61%
PROP. 12" ON +0.61%
PROP. 12" ON +0.61%
PROP. 12" ON +0.77%
1000 L.F. 12" P.V.C. (SDR-26) SAN. SEW. BY OPEN CUT W/CLASS "H" EMBEDMENT
STA. 10+00
F.L. PROP. 12" (IN, E) 549.97
STA. 12+80.72
F.L. PROP. 12" (OUT, W) 551.68
F.L. PROP. 12" (IN, E) 551.88
STA. 17+22
F.L. PROP. 12" (OUT, W) 554.35
F.L. PROP. 12" (IN, E) 554.55
STA. 18+72.83
F.L. PROP. 12" (OUT, W) 555.47
F.L. PROP. 12" (IN, E) 555.67
STA. 19+97.41
F.L. PROP. 12" (OUT, W) 556.42
F.L. PROP. 12" (IN, E) 556.62
10+00
11+00
12+00
13+00
14+00
15+00
16+00
17+00
18+00
19+00
20+00
THESE DOCUMENTS ARE FOR BIDDING, CONSTRUCTION, AND PERMIT PURPOSES
DATE: 9/14/04
STATE OF TEXAS
PAUL A. CARLINE
85400
LICENSED
PROFESSIONAL ENGINEER
CITY OF ROCKWALL, TEXAS
AMITY LANE SAN. SEW. IMPROVEMENTS
SAN. SEW. LINE 'SS1' PLAN AND PROFILE
STA 10+00 TO STA. 20+00
BIRKHOFF, HENDRICKS & CONWAY, L.L.P.
CONSULTING ENGINEERS
Dallas, Texas
DESIGNED BY: P.A.C.
DRAWN BY: R.J.L.
PROJECT: 2002-104
DATE: SEPTEMBER, 2004
SHEET NO. 2 OF 19 SHEETS
09/14/04 KAB
H:\ROCKWALL\2002104\SHEETS\2002104-SS2.DWG
SCALE: 1=40
XREF: ROCKWALL\2002104\BASE\TOPO-BASE, MASTER SURVEY, NEW-SS-S1

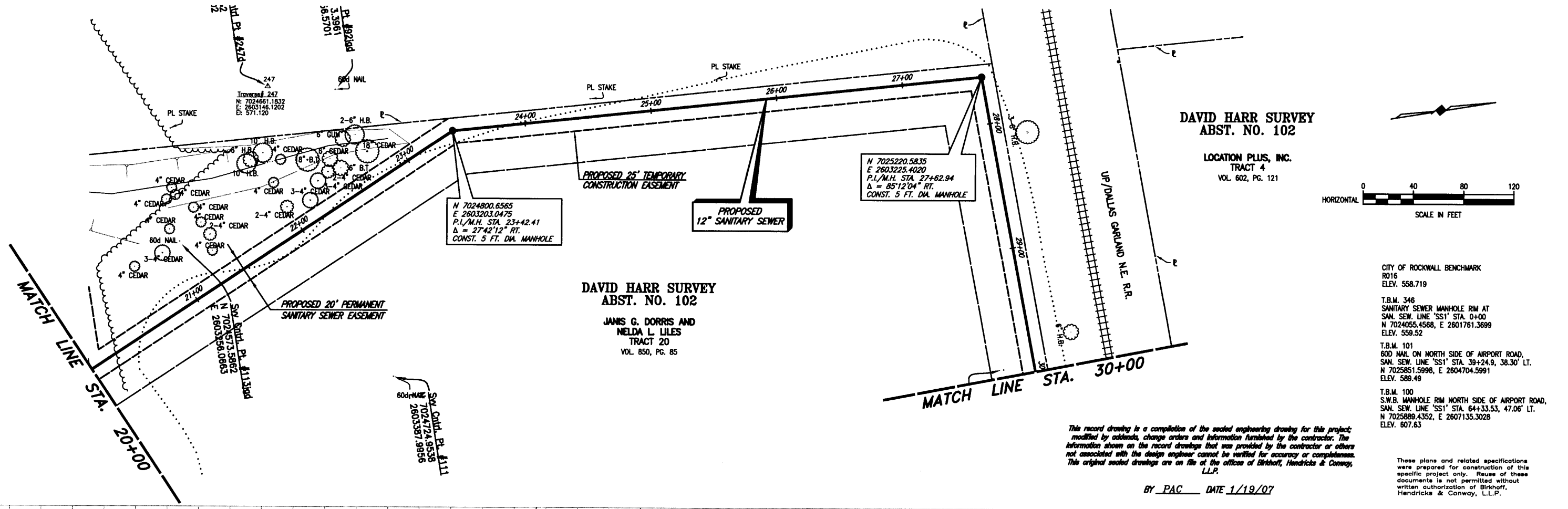

CITY OF ROCKWALL BENCHMARK
R016
ELEV. 558.719

T.B.M. 346
SANITARY SEWER MANHOLE RIM AT
SAN. SEW. LINE 'SS1' STA. 0+00
N 7024055.4568, E 2601761.3699
ELEV. 559.52

T.B.M. 101
60D NAIL ON NORTH SIDE OF AIRPORT ROAD,
SAN. SEW. LINE 'SS1' STA. 39+24.9, 38.30' LT.
N 7025851.5998, E 2604704.5991
ELEV. 589.49

T.B.M. 100
S.W.B. MANHOLE RIM NORTH SIDE OF AIRPORT ROAD,
SAN. SEW. LINE 'SS1' STA. 64+33.53, 47.06' LT.
N 7025889.4352, E 2607135.3028
ELEV. 607.63

This record drawing is a compilation of the sealed engineering drawing for this project; modified by addenda, change orders and information furnished by the contractor. The information shown on the record drawings that was provided by the contractor or others not associated with the design engineer cannot be verified for accuracy or completeness. This original sealed drawings are on file at the offices of Birkhoff, Hendricks & Conway, L.L.P.

BY PAC DATE 1/19/07

These plans and related specifications were prepared for construction of this specific project only. Reuse of these documents is not permitted without written authorization of Birkhoff, Hendricks & Conway, L.L.P.

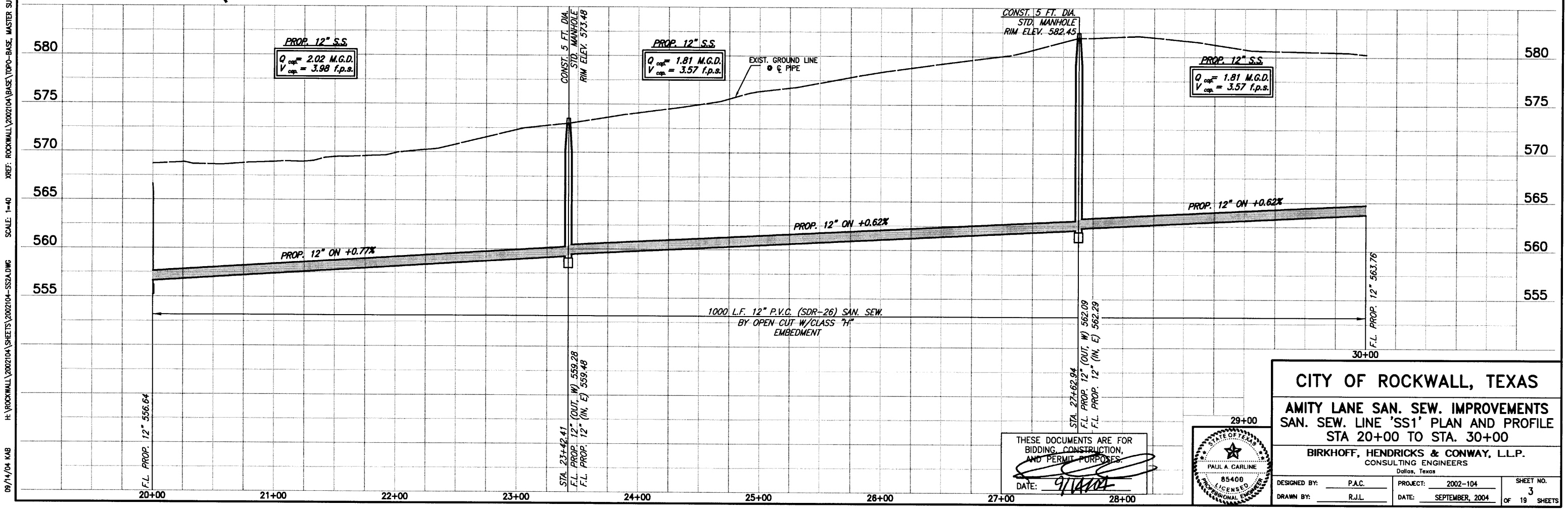

THESE DOCUMENTS ARE FOR BIDDING, CONSTRUCTION, AND PERMIT PURPOSES.
DATE: 9/14/04

STATE OF TEXAS
PAUL A. CARLINE
85400
LICENSED
PROFESSIONAL ENGINEER

CITY OF ROCKWALL, TEXAS

AMITY LANE SAN. SEW. IMPROVEMENTS
SAN. SEW. LINE 'SS1' PLAN AND PROFILE
STA 20+00 TO STA. 30+00

BIRKHOFF, HENDRICKS & CONWAY, L.L.P.
CONSULTING ENGINEERS
Dallas, Texas

DESIGNED BY: P.A.C.	PROJECT: 2002-104	SHEET NO. 3
DRAWN BY: R.J.L.	DATE: SEPTEMBER, 2004	OF 19 SHEETS

09/14/04 KAB H:\ROCKWALL\2002104\SHEETS\2002104-SS2A.DWG SCALE: 1=40 XREF: ROCKWALL\2002104\BASE\TOPO-BASE, MASTER SURVEY, SanSewSS1 Rev(2)

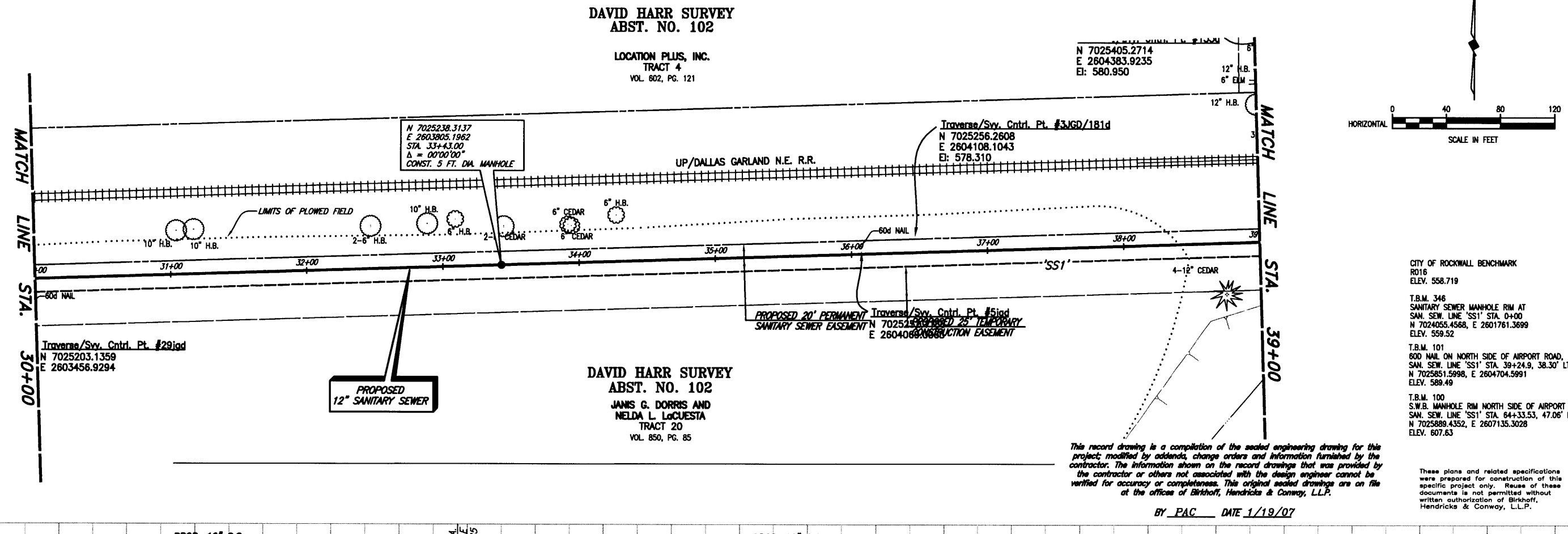

CITY OF ROCKWALL BENCHMARK
R016
ELEV. 558.719

T.B.M. 346
SANITARY SEWER MANHOLE RIM AT
SAN. SEW. LINE 'SS1' STA. 0+00
N 7024055.4568, E 2601761.3699
ELEV. 559.52

T.B.M. 101
60D NAIL ON NORTH SIDE OF AIRPORT ROAD,
SAN. SEW. LINE 'SS1' STA. 39+24.9, 38.30' LT.
N 7025851.5998, E 2604704.5991
ELEV. 589.49

T.B.M. 100
S.W.B. MANHOLE RIM NORTH SIDE OF AIRPORT ROAD,
SAN. SEW. LINE 'SS1' STA. 64+33.53, 47.06' LT.
N 7025889.4352, E 2607135.3028
ELEV. 607.63

This record drawing is a compilation of the sealed engineering drawing for this project; modified by addenda, change orders and information furnished by the contractor. The information shown on the record drawings that was provided by the contractor or others not associated with the design engineer cannot be verified for accuracy or completeness. This original sealed drawings are on file at the offices of Birkhoff, Hendricks & Conway, L.L.P.

BY PAC DATE 1/19/07

These plans and related specifications were prepared for construction of this specific project only. Reuse of these documents is not permitted without written authorization of Birkhoff, Hendricks & Conway, L.L.P.

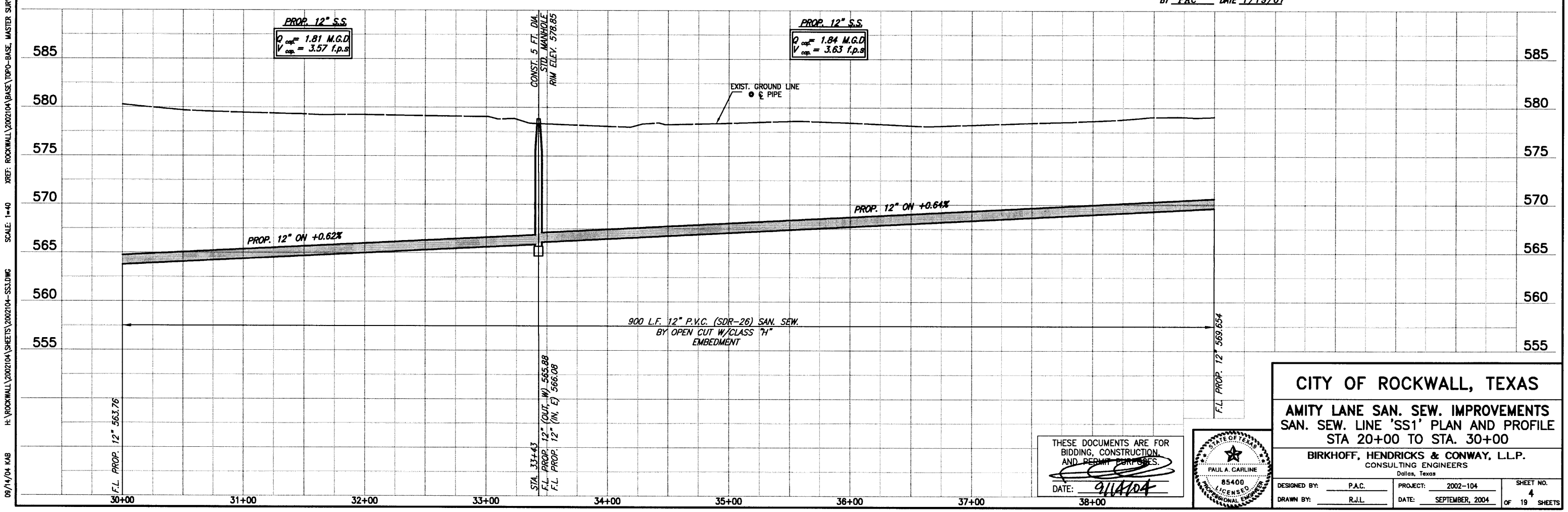

THESE DOCUMENTS ARE FOR BIDDING, CONSTRUCTION, AND PERMIT PURPOSES.
DATE: 9/14/04

STATE OF TEXAS
PAUL A. CARLINE
85400
LICENSED
PROFESSIONAL ENGINEER

CITY OF ROCKWALL, TEXAS

AMITY LANE SAN. SEW. IMPROVEMENTS
SAN. SEW. LINE 'SS1' PLAN AND PROFILE
STA 20+00 TO STA. 30+00

BIRKHOFF, HENDRICKS & CONWAY, L.L.P.
CONSULTING ENGINEERS
Dallas, Texas

DESIGNED BY: P.A.C.	PROJECT: 2002-104	SHEET NO. 4 OF 19 SHEETS
DRAWN BY: R.J.L.	DATE: SEPTEMBER, 2004	

09/14/04 KAB H:\ROCKWALL\2002104\SHEETS\2002104-SS3.DWG SCALE: 1=40 XREF: ROCKWALL\2002104\BASE\TOPO-BASE, MASTER SURVEY, SanSewSS1 Rev(2)

This record drawing is a compilation of the sealed engineering drawing for this project; modified by addenda, change orders and information furnished by the contractor. The information shown on the record drawings that was provided by the contractor or others not associated with the design engineer cannot be verified for accuracy or completeness. This original sealed drawings are on file at the offices of Birkhoff, Hendricks & Conway, L.L.P.

BY PAC DATE 1/19/07

SANITARY SEWER SERVICES	
LOCATION	PROP. 4" SERVICES (L.F.)
STA. 32+28.00 (SS1)	10' WEST
STA. 35+24.00 (SS1)	10' WEST
STA. 39+63.25 (SS1)	7.5' SOUTH
FURNISH & INSTALL: 1-8"x4" WYE 4" P.V.C. WASTEWATER LATERAL CONNECTION	

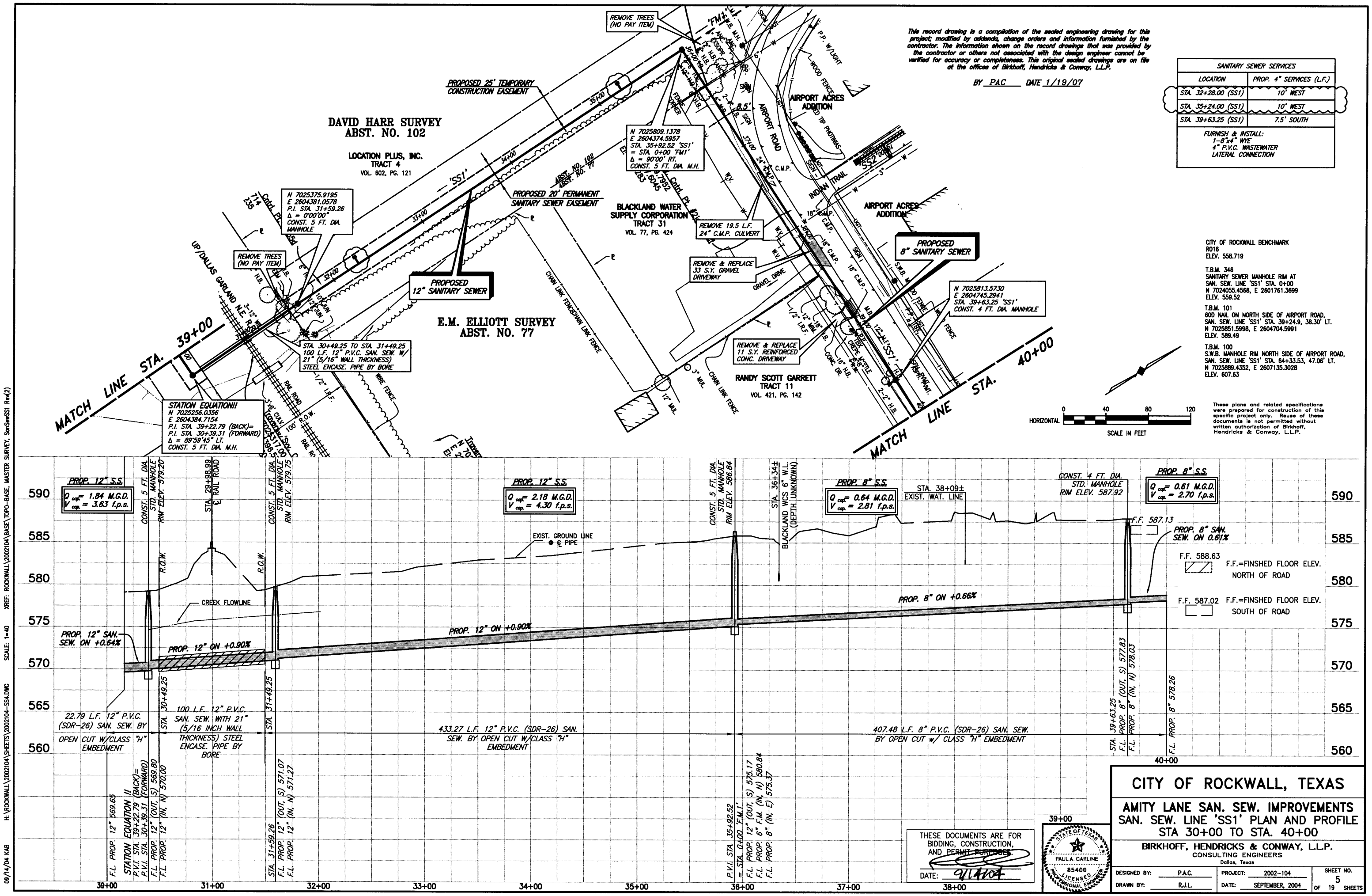

THESE DOCUMENTS ARE FOR BIDDING, CONSTRUCTION, AND ~~PERMIT PURPOSES~~.

DATE: 9/14/04

STATE OF TEXAS — PAUL A. CARLINE — 85400 — LICENSED PROFESSIONAL ENGINEER

CITY OF ROCKWALL, TEXAS

AMITY LANE SAN. SEW. IMPROVEMENTS
SAN. SEW. LINE 'SS1' PLAN AND PROFILE
STA 30+00 TO STA. 40+00

BIRKHOFF, HENDRICKS & CONWAY, L.L.P.
CONSULTING ENGINEERS
Dallas, Texas

DESIGNED BY: P.A.C.	PROJECT: 2002-104	SHEET NO. 5 OF 19 SHEETS
DRAWN BY: R.J.L.	DATE: SEPTEMBER, 2004	

09/14/04 KAB H:\ROCKWALL\2002104\SHEETS\2002104-SS4.DWG SCALE: 1=40 XREF: ROCKWALL\2002104\BASE\TOPO-BASE, MASTER SURVEY, SanSewSS1 Rev(2)

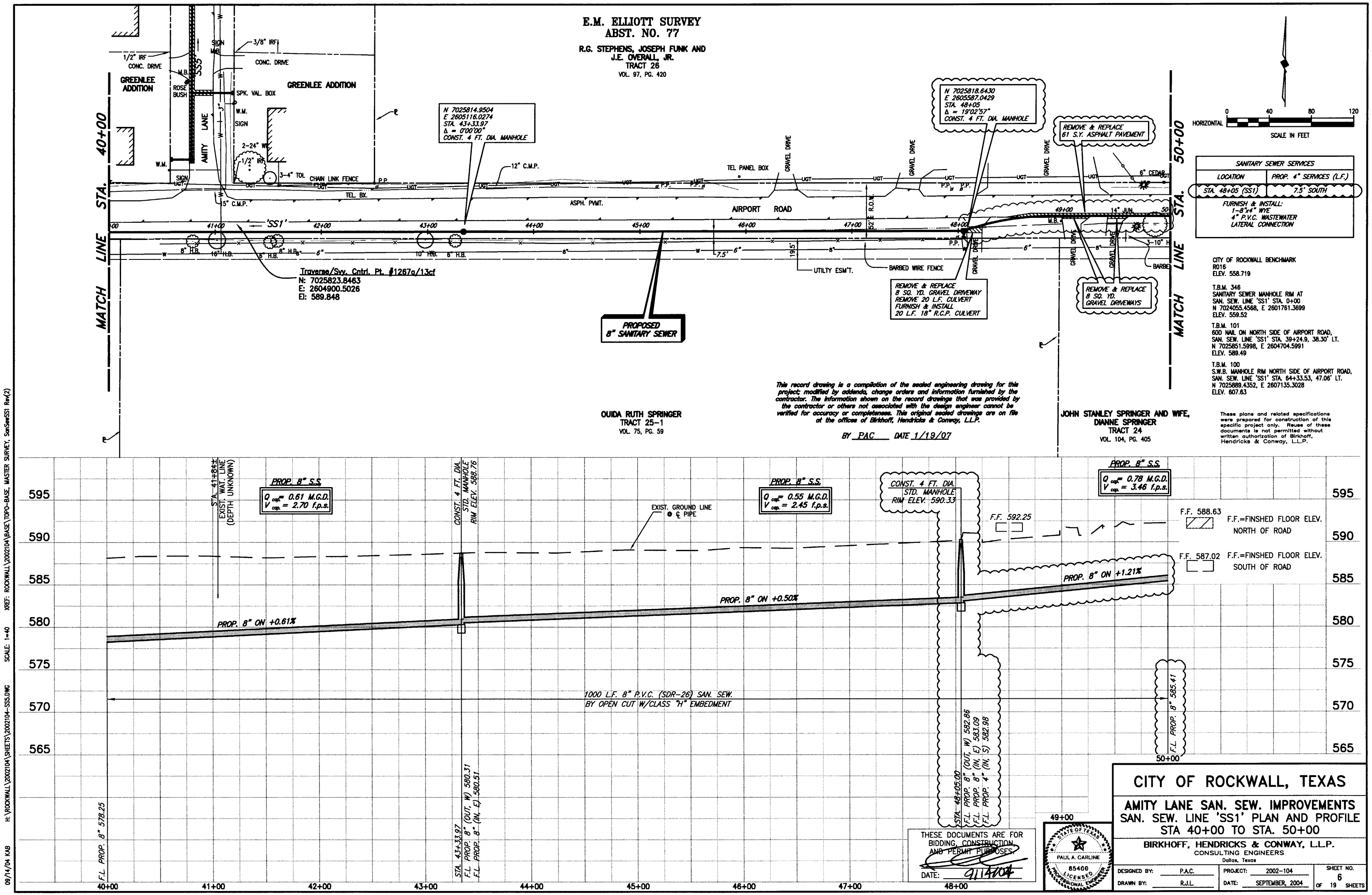
E.M. ELLIOTT SURVEY
ABST. NO. 77
R.G. STEPHENS, JOSEPH FUNK AND J.E. OVERALL, JR.
TRACT 26
VOL. 97, PG. 420
GREENLEE ADDITION
GREENLEE ADDITION
AMITY LANE
CONC. DRIVE
1/2" IRF
3/8" IRF
SPK. VAL. BOX
W.M.
SIGN
2-24" WI
3-4" TOL
CHAIN LINK FENCE
TEL. BX.
5" C.M.P.
12" C.M.P.
ASPH. PVMT.
TEL PANEL BOX
GRAVEL DRIVE
AIRPORT ROAD
R.O.W.
6" CEDAR
14" JUN.
3-10" H
BARBED
UTILTY ESM'T.
BARBED WIRE FENCE
'SS1'
MATCH LINE STA. 40+00
MATCH LINE STA. 50+00
N 7025814.9504
E 2605116.0274
STA. 43+33.97
Δ = 0°00'00"
CONST. 4 FT. DIA. MANHOLE
N 7025818.6430
E 2605587.0429
STA. 48+05
Δ = 19°02'57"
CONST. 4 FT. DIA. MANHOLE
REMOVE & REPLACE 61 S.Y. ASPHALT PAVEMENT
Traverse/Svy. Cntrl. Pt. #1267a/13cf
N: 7025823.8463
E: 2604900.5026
El: 589.848
PROPOSED 8" SANITARY SEWER
REMOVE & REPLACE 8 SQ. YD. GRAVEL DRIVEWAY
REMOVE 20 L.F. CULVERT
FURNISH & INSTALL 20 L.F. 18" R.C.P. CULVERT
REMOVE & REPLACE 8 SQ. YD. GRAVEL DRIVEWAYS
HORIZONTAL 0 40 80 120
SCALE IN FEET
SANITARY SEWER SERVICES
LOCATION | PROP. 4" SERVICES (L.F.)
STA. 48+05 (SS1) | 7.5' SOUTH
FURNISH & INSTALL:
1-8"x4" WYE
4" P.V.C. WASTEWATER
LATERAL CONNECTION
CITY OF ROCKWALL BENCHMARK
R016
ELEV. 558.719
T.B.M. 346
SANITARY SEWER MANHOLE RIM AT
SAN. SEW. LINE 'SS1' STA. 0+00
N 7024055.4568, E 2601761.3699
ELEV. 559.52
T.B.M. 101
60D NAIL ON NORTH SIDE OF AIRPORT ROAD,
SAN. SEW. LINE 'SS1' STA. 39+24.9, 38.30' LT.
N 7025851.5998, E 2604704.5991
ELEV. 589.49
T.B.M. 100
S.W.B. MANHOLE RIM NORTH SIDE OF AIRPORT ROAD,
SAN. SEW. LINE 'SS1' STA. 64+33.53, 47.06' LT.
N 7025889.4352, E 2607135.3028
ELEV. 607.63
OUIDA RUTH SPRINGER
TRACT 25-1
VOL. 75, PG. 59
JOHN STANLEY SPRINGER AND WIFE, DIANNE SPRINGER
TRACT 24
VOL. 104, PG. 405
This record drawing is a compilation of the sealed engineering drawing for this project; modified by addenda, change orders and information furnished by the contractor. The information shown on the record drawings that was provided by the contractor or others not associated with the design engineer cannot be verified for accuracy or completeness. This original sealed drawings are on file at the offices of Birkhoff, Hendricks & Conway, L.L.P.
BY PAC DATE 1/19/07
These plans and related specifications were prepared for construction of this specific project only. Reuse of these documents is not permitted without written authorization of Birkhoff, Hendricks & Conway, L.L.P.
PROP. 8" S.S.
Q cap. = 0.61 M.G.D.
V cap. = 2.70 f.p.s.
STA. 41+84± EXIST. WAT. LINE (DEPTH UNKNOWN)
CONST. 4 FT. DIA. STD. MANHOLE RIM ELEV. 588.76
PROP. 8" S.S.
Q cap. = 0.55 M.G.D.
V cap. = 2.45 f.p.s.
CONST. 4 FT. DIA. STD. MANHOLE RIM ELEV. 590.33
PROP. 8" S.S.
Q cap. = 0.78 M.G.D.
V cap. = 3.46 f.p.s.
EXIST. GROUND LINE @ ℄ PIPE
F.F. 592.25
F.F. 588.63
F.F.=FINSHED FLOOR ELEV. NORTH OF ROAD
F.F. 587.02
F.F.=FINSHED FLOOR ELEV. SOUTH OF ROAD
PROP. 8" ON +1.21%
PROP. 8" ON +0.50%
PROP. 8" ON +0.61%
1000 L.F. 8" P.V.C. (SDR-26) SAN. SEW. BY OPEN CUT W/CLASS "H" EMBEDMENT
F.L. PROP. 8" 578.25
STA. 43+33.97 F.L. PROP. 8" (OUT, W) 580.31 F.L. PROP. 8" (IN, E) 580.51
STA. 48+05.00 F.L. PROP. 8" (OUT, W) 582.86 F.L. PROP. 8" (IN, E) 583.09 F.L. PROP. 4" (IN, S) 582.98
F.L. PROP. 8" 585.41
595
590
585
580
575
570
565
40+00
41+00
42+00
43+00
44+00
45+00
46+00
47+00
48+00
49+00
50+00
THESE DOCUMENTS ARE FOR BIDDING, CONSTRUCTION AND PERMIT PURPOSES
DATE: 9/14/04
STATE OF TEXAS
PAUL A. CARLINE
85400
LICENSED PROFESSIONAL ENGINEER
CITY OF ROCKWALL, TEXAS
AMITY LANE SAN. SEW. IMPROVEMENTS
SAN. SEW. LINE 'SS1' PLAN AND PROFILE
STA 40+00 TO STA. 50+00
BIRKHOFF, HENDRICKS & CONWAY, L.L.P.
CONSULTING ENGINEERS
Dallas, Texas
DESIGNED BY: P.A.C.
DRAWN BY: R.J.L.
PROJECT: 2002-104
DATE: SEPTEMBER, 2004
SHEET NO. 6 OF 19 SHEETS
09/14/04 KAB H:\ROCKWALL\2002104\SHEETS\2002104-SS5.DWG SCALE: 1=40 XREF: ROCKWALL\2002104\BASE\TOPO-BASE, MASTER SURVEY, SanSewSS1 Rev(2)

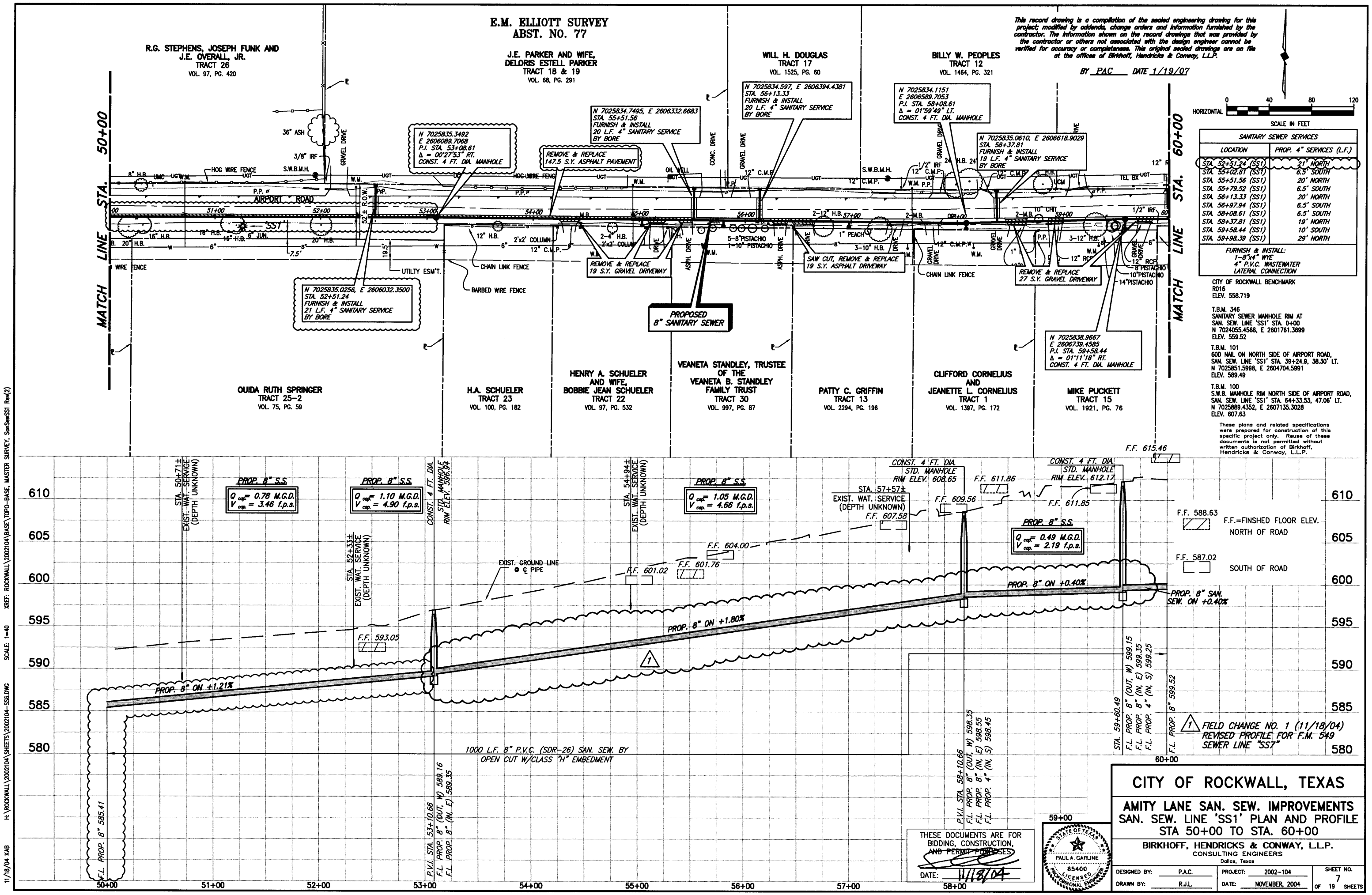
E.M. ELLIOTT SURVEY
ABST. NO. 77
R.G. STEPHENS, JOSEPH FUNK AND J.E. OVERALL, JR.
TRACT 26
VOL. 97, PG. 420
J.E. PARKER AND WIFE, DELORIS ESTELL PARKER
TRACT 18 & 19
VOL. 68, PG. 291
WILL H. DOUGLAS
TRACT 17
VOL. 1525, PG. 60
BILLY W. PEOPLES
TRACT 12
VOL. 1464, PG. 321
This record drawing is a compilation of the sealed engineering drawing for this project; modified by addenda, change orders and information furnished by the contractor. The information shown on the record drawings that was provided by the contractor or others not associated with the design engineer cannot be verified for accuracy or completeness. This original sealed drawings are on file at the offices of Birkhoff, Hendricks & Conway, L.L.P.
BY PAC DATE 1/19/07
HORIZONTAL 0 40 80 120
SCALE IN FEET
SANITARY SEWER SERVICES
LOCATION | PROP. 4" SERVICES (L.F.)
STA. 52+51.24 (SS1) 21' NORTH
STA. 53+02.81 (SS1) 6.5' SOUTH
STA. 55+51.56 (SS1) 20' NORTH
STA. 55+79.52 (SS1) 6.5' SOUTH
STA. 56+13.33 (SS1) 20' NORTH
STA. 56+97.94 (SS1) 6.5' SOUTH
STA. 58+08.61 (SS1) 6.5' SOUTH
STA. 58+37.81 (SS1) 19' NORTH
STA. 59+58.44 (SS1) 10' NORTH
STA. 59+98.39 (SS1) 29' NORTH
FURNISH & INSTALL:
1-8"x4" WYE
4" P.V.C. WASTEWATER
LATERAL CONNECTION
CITY OF ROCKWALL BENCHMARK
R016
ELEV. 558.719
T.B.M. 346
SANITARY SEWER MANHOLE RIM AT
SAN. SEW. LINE 'SS1' STA. 0+00
N 7024055.4568, E 2601761.3699
ELEV. 559.52
T.B.M. 101
60D NAIL ON NORTH SIDE OF AIRPORT ROAD,
SAN. SEW. LINE 'SS1' STA. 39+24.9, 38.30' LT.
N 7025851.5998, E 2604704.5991
ELEV. 589.49
T.B.M. 100
S.W.B. MANHOLE RIM NORTH SIDE OF AIRPORT ROAD,
SAN. SEW. LINE 'SS1' STA. 64+33.53, 47.06' LT.
N 7025889.4352, E 2607135.3028
ELEV. 607.63
These plans and related specifications were prepared for construction of this specific project only. Reuse of these documents is not permitted without written authorization of Birkhoff, Hendricks & Conway, L.L.P.
N 7025835.3492
E 2606089.7068
P.I. STA. 53+08.61
Δ = 00°27'53" RT.
CONST. 4 FT. DIA. MANHOLE
N 7025834.7495, E 2606332.6683
STA. 55+51.56
FURNISH & INSTALL
20 L.F. 4" SANITARY SERVICE
BY BORE
N 7025834.597, E 2606394.4381
STA. 56+13.33
FURNISH & INSTALL
20 L.F. 4" SANITARY SERVICE
BY BORE
N 7025834.1151
E 2606589.7053
P.I. STA. 58+08.61
Δ = 01°59'49" LT.
CONST. 4 FT. DIA. MANHOLE
N 7025835.0610, E 2606618.9029
STA. 58+37.81
FURNISH & INSTALL
19 L.F. 4" SANITARY SERVICE
BY BORE
N 7025835.0256, E 2606032.3500
STA. 52+51.24
FURNISH & INSTALL
21 L.F. 4" SANITARY SERVICE
BY BORE
N 7025838.9667
E 2606739.4585
P.I. STA. 59+58.44
Δ = 01°11'18" RT.
CONST. 4 FT. DIA. MANHOLE
REMOVE & REPLACE
147.5 S.Y. ASPHALT PAVEMENT
REMOVE & REPLACE
19 S.Y. GRAVEL DRIVEWAY
SAW CUT, REMOVE & REPLACE
19 S.Y. ASPHALT DRIVEWAY
REMOVE & REPLACE
27 S.Y. GRAVEL DRIVEWAY
PROPOSED
8" SANITARY SEWER
MATCH LINE STA. 50+00
MATCH LINE STA. 60+00
AIRPORT ROAD
OUIDA RUTH SPRINGER
TRACT 25-2
VOL. 75, PG. 59
H.A. SCHUELER
TRACT 23
VOL. 100, PG. 182
HENRY A. SCHUELER AND WIFE, BOBBIE JEAN SCHUELER
TRACT 22
VOL. 97, PG. 532
VEANETA STANDLEY, TRUSTEE OF THE VEANETA B. STANDLEY FAMILY TRUST
TRACT 30
VOL. 997, PG. 87
PATTY C. GRIFFIN
TRACT 13
VOL. 2294, PG. 196
CLIFFORD CORNELIUS AND JEANETTE L. CORNELIUS
TRACT 1
VOL. 1397, PG. 172
MIKE PUCKETT
TRACT 15
VOL. 1921, PG. 76
PROP. 8" S.S.
Q cap. = 0.78 M.G.D.
V cap. = 3.46 f.p.s.
PROP. 8" S.S.
Q cap. = 1.10 M.G.D.
V cap. = 4.90 f.p.s.
PROP. 8" S.S.
Q cap. = 1.05 M.G.D.
V cap. = 4.66 f.p.s.
PROP. 8" S.S.
Q cap. = 0.49 M.G.D.
V cap. = 2.19 f.p.s.
STA. 50+71± EXIST. WAT. SERVICE (DEPTH UNKNOWN)
STA. 52+33± EXIST. WAT. SERVICE (DEPTH UNKNOWN)
STA. 54+94± EXIST. WAT. SERVICE (DEPTH UNKNOWN)
STA. 57+57± EXIST. WAT. SERVICE (DEPTH UNKNOWN)
CONST. 4 FT. DIA. STD. MANHOLE RIM ELEV. 596.54
CONST. 4 FT. DIA. STD. MANHOLE RIM ELEV. 608.65
CONST. 4 FT. DIA. STD. MANHOLE RIM ELEV. 612.17
EXIST. GROUND LINE
℄ PIPE
F.F. 593.05
F.F. 601.02
F.F. 601.76
F.F. 604.00
F.F. 607.58
F.F. 609.56
F.F. 611.86
F.F. 611.85
F.F. 615.46
F.F. 588.63
F.F.=FINSHED FLOOR ELEV.
NORTH OF ROAD
F.F. 587.02
SOUTH OF ROAD
PROP. 8" ON +1.21%
PROP. 8" ON +1.80%
PROP. 8" ON +0.40%
PROP. 8" SAN. SEW. ON +0.40%
1000 L.F. 8" P.V.C. (SDR-26) SAN. SEW. BY OPEN CUT W/CLASS "H" EMBEDMENT
F.L. PROP. 8" 585.41
P.V.I. STA. 53+10.66
F.L. PROP. 8" (OUT, W) 589.16
F.L. PROP. 8" (IN, E) 589.35
P.V.I. STA. 58+10.66
F.L. PROP. 8" (OUT, W) 598.35
F.L. PROP. 8" (IN, E) 598.55
F.L. PROP. 4" (IN, S) 598.45
STA. 59+60.49
F.L. PROP. 8" (OUT, W) 599.15
F.L. PROP. 8" (IN, E) 599.35
F.L. PROP. 4" (IN, S) 599.25
F.L. PROP. 8" 599.52
1 FIELD CHANGE NO. 1 (11/18/04)
REVISED PROFILE FOR F.M. 549
SEWER LINE "SS7"
610
605
600
595
590
585
580
50+00
51+00
52+00
53+00
54+00
55+00
56+00
57+00
58+00
59+00
60+00
THESE DOCUMENTS ARE FOR BIDDING, CONSTRUCTION, AND PERMIT PURPOSES.
DATE: 11/18/04
STATE OF TEXAS
PAUL A. CARLINE
85400
LICENSED
PROFESSIONAL ENGINEER
CITY OF ROCKWALL, TEXAS
AMITY LANE SAN. SEW. IMPROVEMENTS
SAN. SEW. LINE 'SS1' PLAN AND PROFILE
STA 50+00 TO STA. 60+00
BIRKHOFF, HENDRICKS & CONWAY, L.L.P.
CONSULTING ENGINEERS
Dallas, Texas
DESIGNED BY: P.A.C.
DRAWN BY: R.J.L.
PROJECT: 2002-104
DATE: NOVEMBER, 2004
SHEET NO. 7 OF 19 SHEETS
11/18/04 KAB
H:\ROCKWALL\2002104\SHEETS\2002104-SS6.DWG
SCALE: 1=40
XREF: ROCKWALL\2002104\BASE\TOPO-BASE, MASTER SURVEY, SanSewSS1 Rev(2)

This record drawing is a compilation of the sealed engineering drawing for this project; modified by addenda, change orders and information furnished by the contractor. The information shown on the record drawings that was provided by the contractor or others not associated with the design engineer cannot be verified for accuracy or completeness. This original sealed drawings are on file at the offices of Birkhoff, Hendricks & Conway, L.L.P.

BY PAC DATE 1/19/07

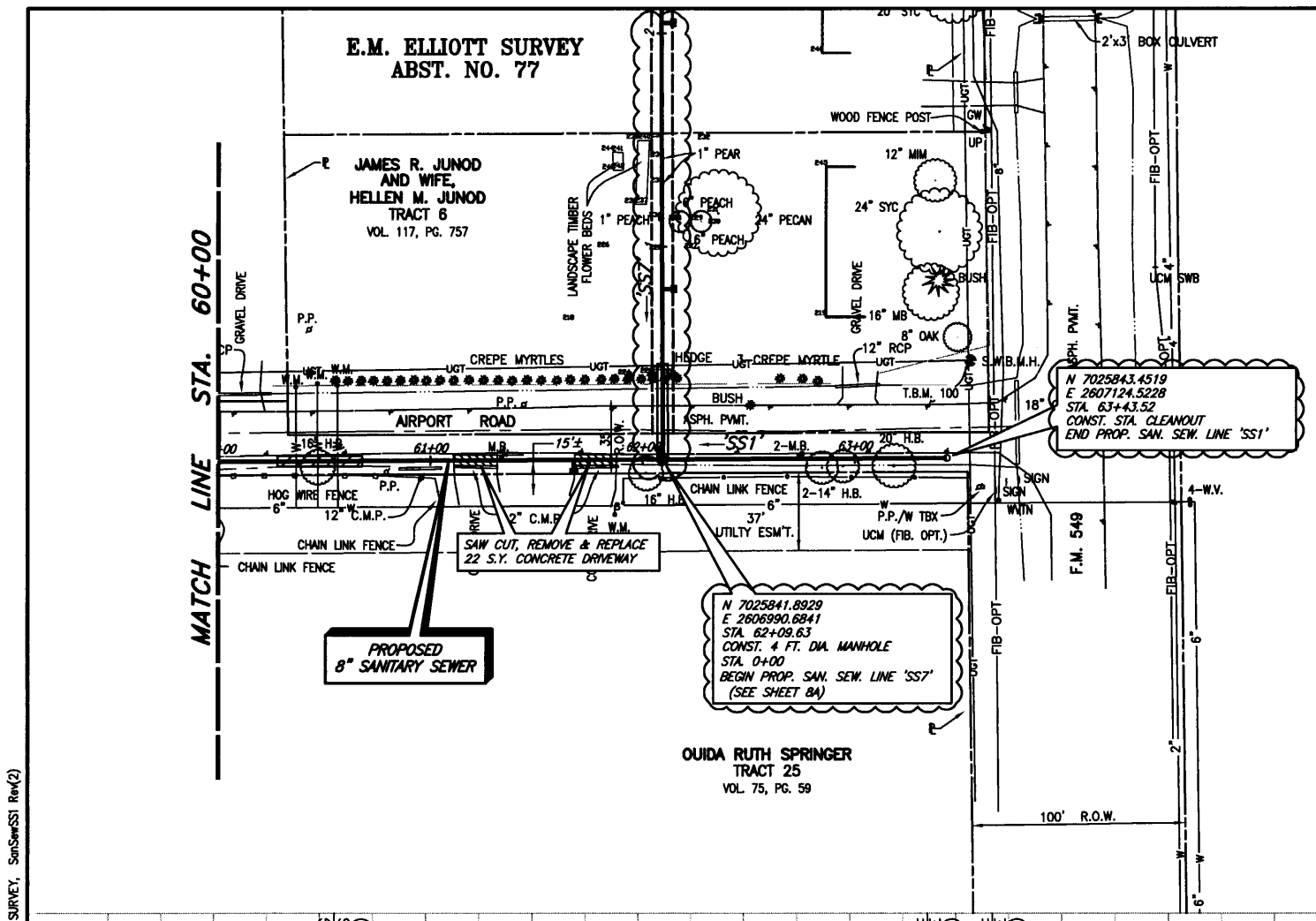

SANITARY SEWER SERVICES	
LOCATION	PROP. 4" SERVICES (L.F.)
STA. 61+69.46 (SS1)	6.5' SOUTH
~~STA. 63+16.10 (SS1)~~	~~28.5' NORTH~~

FURNISH & INSTALL:
1-8"x4" WYE
4" P.V.C. WASTEWATER
LATERAL CONNECTION

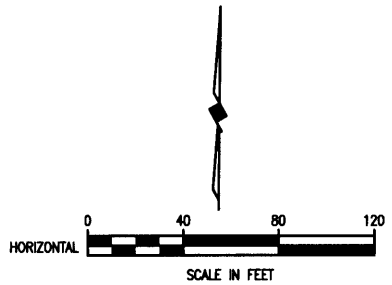

CITY OF ROCKWALL BENCHMARK
R016
ELEV. 558.719

T.B.M. 346
SANITARY SEWER MANHOLE RIM AT
SAN. SEW. LINE 'SS1' STA. 0+00
N 7024055.4568, E 2601761.3699
ELEV. 559.52

T.B.M. 101
60D NAIL ON NORTH SIDE OF AIRPORT ROAD,
SAN. SEW. LINE 'SS1' STA. 39+24.9, 38.30' LT.
N 7025851.5998, E 2604704.5991
ELEV. 589.49

T.B.M. 100
S.W.B. MANHOLE RIM NORTH SIDE OF AIRPORT ROAD,
SAN. SEW. LINE 'SS1' STA. 64+33.53, 47.06' LT.
N 7025889.4352, E 2607135.3028
ELEV. 607.63

These plans and related specifications were prepared for construction of this specific project only. Reuse of these documents is not permitted without written authorization of Birkhoff, Hendricks & Conway, L.L.P.

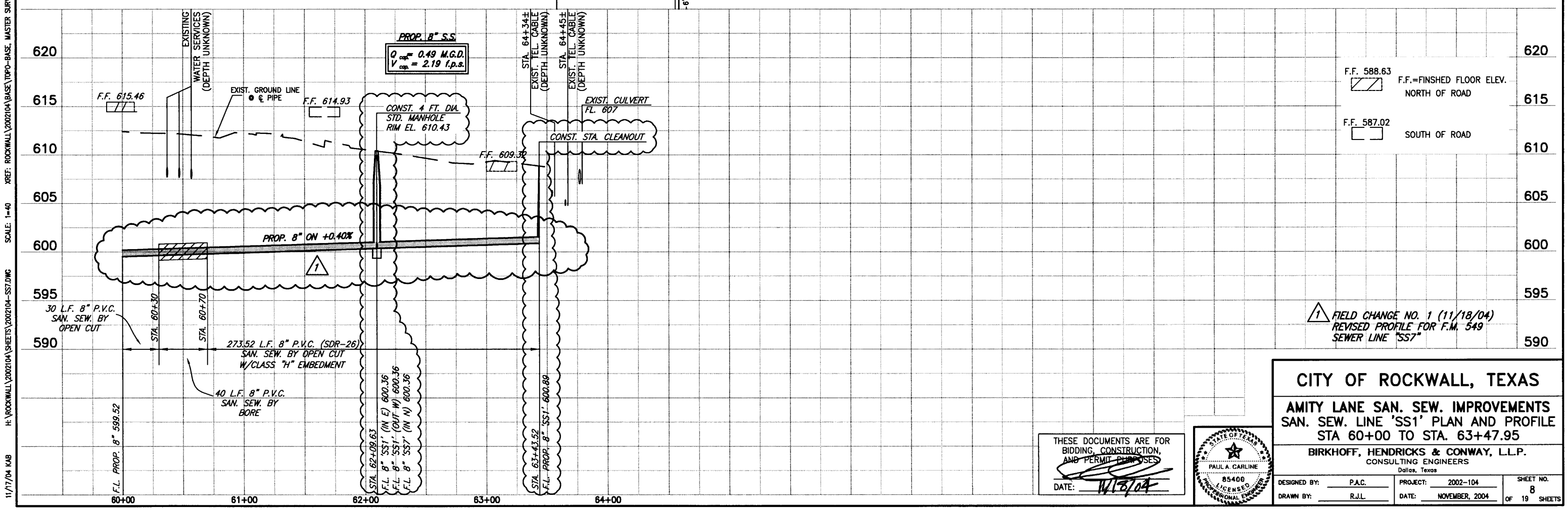

F.F. 588.63 — F.F.=FINSHED FLOOR ELEV. NORTH OF ROAD

F.F. 587.02 — SOUTH OF ROAD

1 FIELD CHANGE NO. 1 (11/18/04)
REVISED PROFILE FOR F.M. 549
SEWER LINE "SS7"

THESE DOCUMENTS ARE FOR BIDDING, CONSTRUCTION, AND PERMIT PURPOSES

DATE: 11/18/04

STATE OF TEXAS — PAUL A. CARLINE — 85400 — LICENSED PROFESSIONAL ENGINEER

CITY OF ROCKWALL, TEXAS

AMITY LANE SAN. SEW. IMPROVEMENTS
SAN. SEW. LINE 'SS1' PLAN AND PROFILE
STA 60+00 TO STA. 63+47.95

BIRKHOFF, HENDRICKS & CONWAY, L.L.P.
CONSULTING ENGINEERS
Dallas, Texas

DESIGNED BY: P.A.C.	PROJECT: 2002-104	SHEET NO. 8 OF 19 SHEETS
DRAWN BY: R.J.L.	DATE: NOVEMBER, 2004	

11/17/04 KAB H:\ROCKWALL\2002104\SHEETS\2002104-SS7.DWG SCALE: 1=40 XREF: ROCKWALL\2002104\BASE\TOPO-BASE, MASTER SURVEY, SanSewSS1 Rev(2)

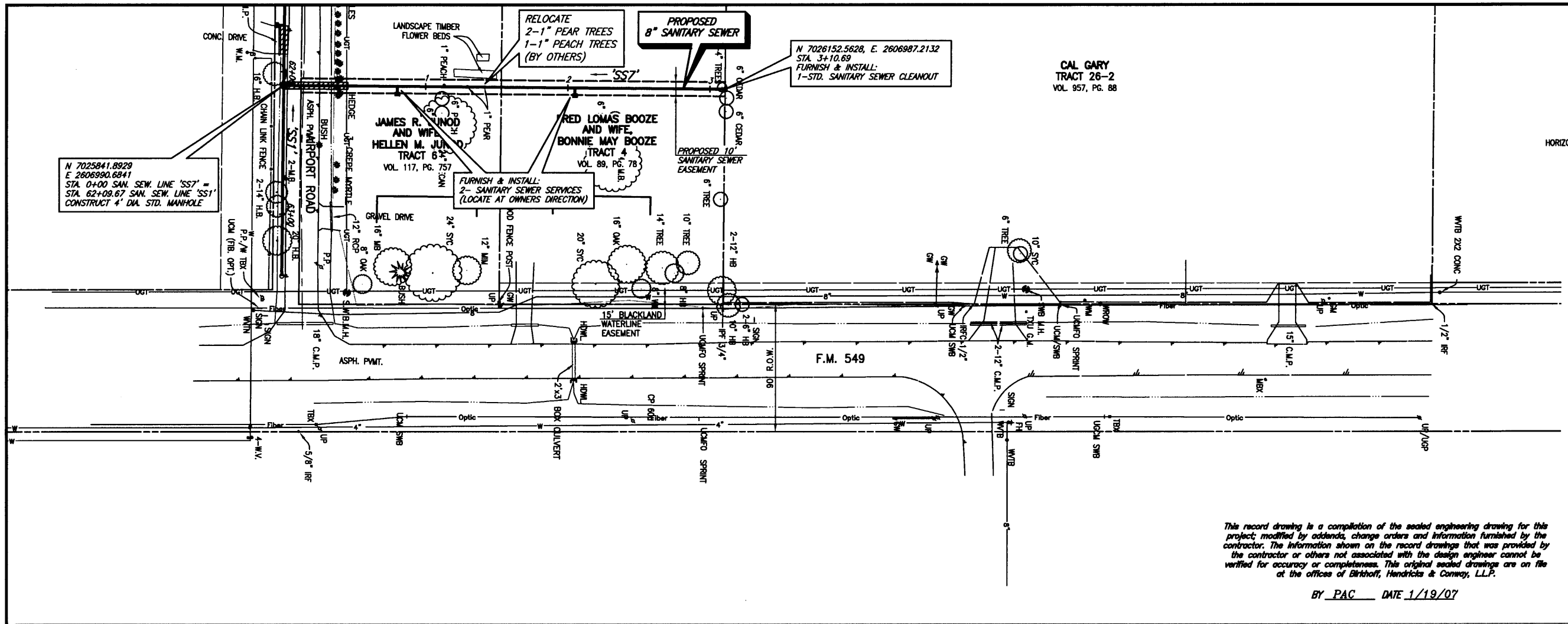

CITY OF ROCKWALL BENCHMARK
R016
ELEV. 558.719

T.B.M. 346
SANITARY SEWER MANHOLE RIM AT
SAN. SEW. LINE 'SS1' STA. 0+00
N 7024055.4568, E 2601761.3699
ELEV. 559.52

T.B.M. 101
60D NAIL ON NORTH SIDE OF AIRPORT ROAD,
SAN. SEW. LINE 'SS1' STA. 39+24.9, 38.30' LT.
N 7025851.5998, E 2604704.5991
ELEV. 589.49

T.B.M. 100
S.W.B. MANHOLE RIM NORTH SIDE OF AIRPORT ROAD,
SAN. SEW. LINE 'SS1' STA. 64+33.53, 47.06' LT.
N 7025889.4352, E 2607135.3028
ELEV. 607.63

This record drawing is a compilation of the sealed engineering drawing for this project; modified by addenda, change orders and information furnished by the contractor. The information shown on the record drawings that was provided by the contractor or others not associated with the design engineer cannot be verified for accuracy or completeness. This original sealed drawings are on file at the offices of Birkhoff, Hendricks & Conway, L.L.P.

BY PAC DATE 1/19/07

These plans and related specifications were prepared for construction of this specific project only. Reuse of these documents is not permitted without written authorization of Birkhoff, Hendricks & Conway, L.L.P.

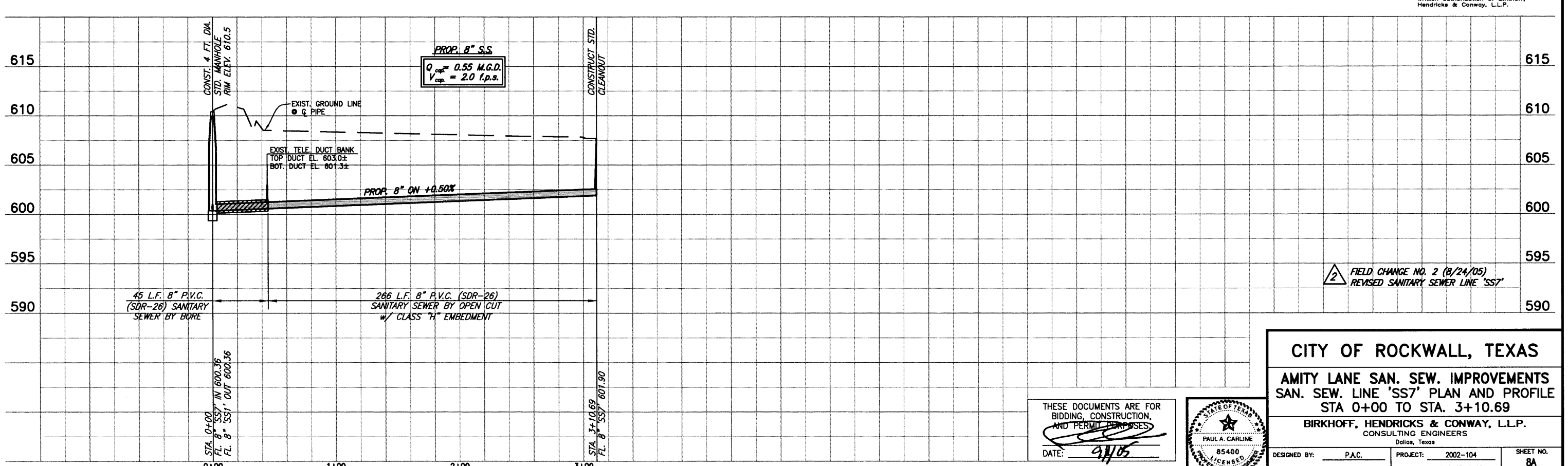

2 FIELD CHANGE NO. 2 (8/24/05)
REVISED SANITARY SEWER LINE 'SS7'

THESE DOCUMENTS ARE FOR BIDDING, CONSTRUCTION, AND PERMIT PURPOSES.
DATE: 9/1/05

STATE OF TEXAS
PAUL A. CARLINE
85400
LICENSED
PROFESSIONAL ENGINEER

CITY OF ROCKWALL, TEXAS

AMITY LANE SAN. SEW. IMPROVEMENTS
SAN. SEW. LINE 'SS7' PLAN AND PROFILE
STA 0+00 TO STA. 3+10.69

BIRKHOFF, HENDRICKS & CONWAY, L.L.P.
CONSULTING ENGINEERS
Dallas, Texas

DESIGNED BY:	P.A.C.	PROJECT:	2002-104	SHEET NO. 8A
DRAWN BY:	B. H. & C.	DATE:	AUGUST, 2005	OF 19 SHEETS

H:\PROJECTS\ROCKWALL\2002104\SHEETS\2002104-SS8.dwg
9/01/05 KAB

This record drawing is a compilation of the sealed engineering drawing for this project; modified by addenda, change orders and information furnished by the contractor. The information shown on the record drawings that was provided by the contractor or others not associated with the design engineer cannot be verified for accuracy or completeness. This original sealed drawings are on file at the offices of Birkhoff, Hendricks & Conway, L.L.P.

BY PAC DATE 1/19/07

HORIZONTAL 0 40 80 120
SCALE IN FEET

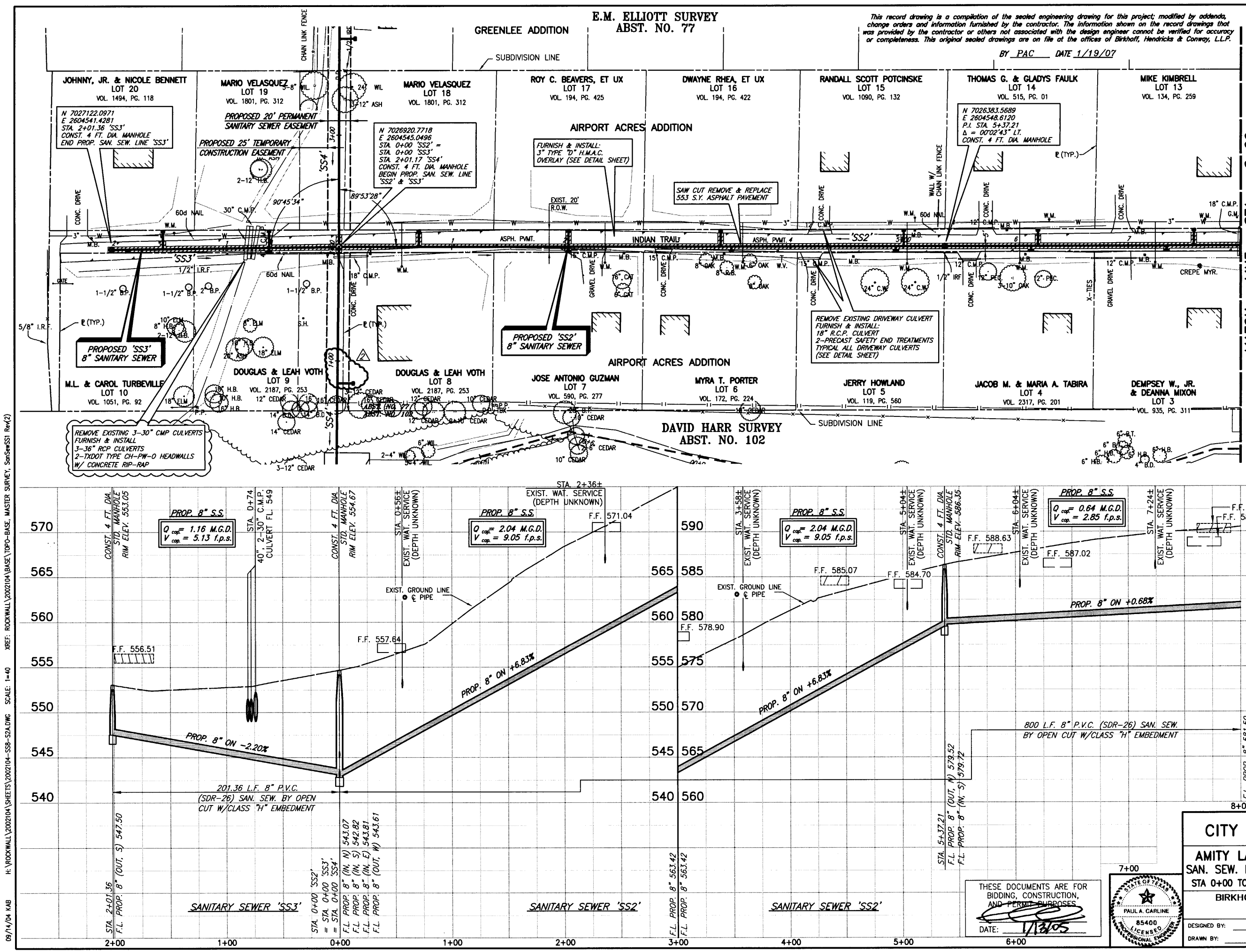

SANITARY SEWER SERVICES	
LOCATION	PROP. 4" SERVICES (L.F.)
STA. 0+61.75 (SS3)	16' EAST, 4.5' WEST
STA. 1+56.05 (SS3)	17' EAST
STA. 1+87.69 (SS3)	3' WEST
STA. 0+70.93 (SS2)	15' EAST
STA. 2+03.68 (SS2)	15' EAST, 5' WEST
STA. 3+38.32 (SS2)	15' EAST
STA. 3+38.32 (SS2)	5' WEST
STA. 4+93.88 (SS2)	5' WEST
STA. 5+00.82 (SS2)	15' EAST
STA. 6+13.78 (SS2)	5' WEST
STA. 6+19.84 (SS2)	15' EAST
STA. 7+34.03 (SS2)	5' WEST
STA. 7+58.27 (SS2)	15' EAST

2 FURNISH & INSTALL:
1-8"x4" WYE
4" P.V.C. WASTEWATER
LATERAL CONNECTION

CITY OF ROCKWALL BENCHMARK
R016
ELEV. 558.719

T.B.M. 346
SANITARY SEWER MANHOLE RIM AT
SAN. SEW. LINE 'SS1' STA. 0+00
N 7024055.4568, E 2601761.3699
ELEV. 559.52

T.B.M. 101
60D NAIL ON NORTH SIDE OF AIRPORT ROAD,
SAN. SEW. LINE 'SS1' STA. 39+24.9 38.30' LT.
N 7025851.5998, E 2604704.5991
ELEV. 589.49

T.B.M. 100
S.W.B. MANHOLE RIM NORTH SIDE OF AIRPORT ROAD,
SAN. SEW. LINE 'SS1' STA. 64+33.53, 47.06' LT.
N 7025889.4352, E 2607135.3028
ELEV. 607.63

These plans and related specifications were prepared for construction of this specific project only. Reuse of these documents is not permitted without written authorization of Birkhoff, Hendricks & Conway, L.L.P.

THESE DOCUMENTS ARE FOR BIDDING, CONSTRUCTION, AND PERMIT PURPOSES

DATE: 1/13/05

STATE OF TEXAS
PAUL A. CARLINE
85400
LICENSED
PROFESSIONAL ENGINEER

CITY OF ROCKWALL, TEXAS

AMITY LANE SAN. SEW. IMPROVEMENTS

SAN. SEW. LINE 'SS2' & 'SS3' PLAN AND PROFILE

STA 0+00 TO 8+00 ('SS2') STA. 0+00 TO 2+01.36 ('SS3')

BIRKHOFF, HENDRICKS & CONWAY, L.L.P.
CONSULTING ENGINEERS
Dallas, Texas

DESIGNED BY: P.A.C.	PROJECT: 2002-104	SHEET NO. 9 OF 19 SHEETS
DRAWN BY: R.J.L.	DATE: SEPTEMBER, 2004	

09/14/04 KAB H:\ROCKWALL\2002104\SHEETS\2002104-SS8-S2A.DWG SCALE: 1=40 XREF: ROCKWALL\2002104\BASE\TOPO-BASE, MASTER SURVEY, SanSewSS1 Rev(2)