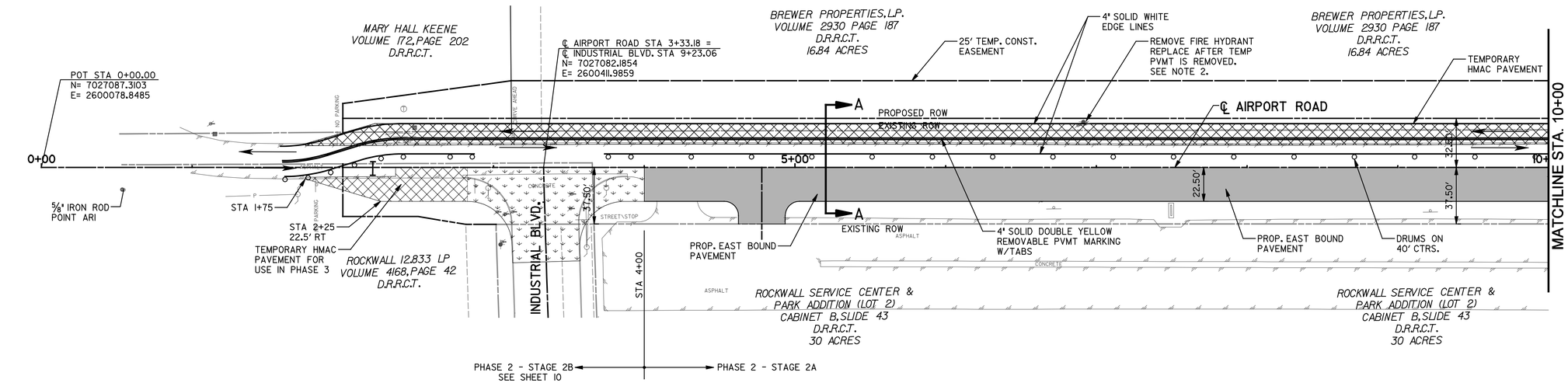

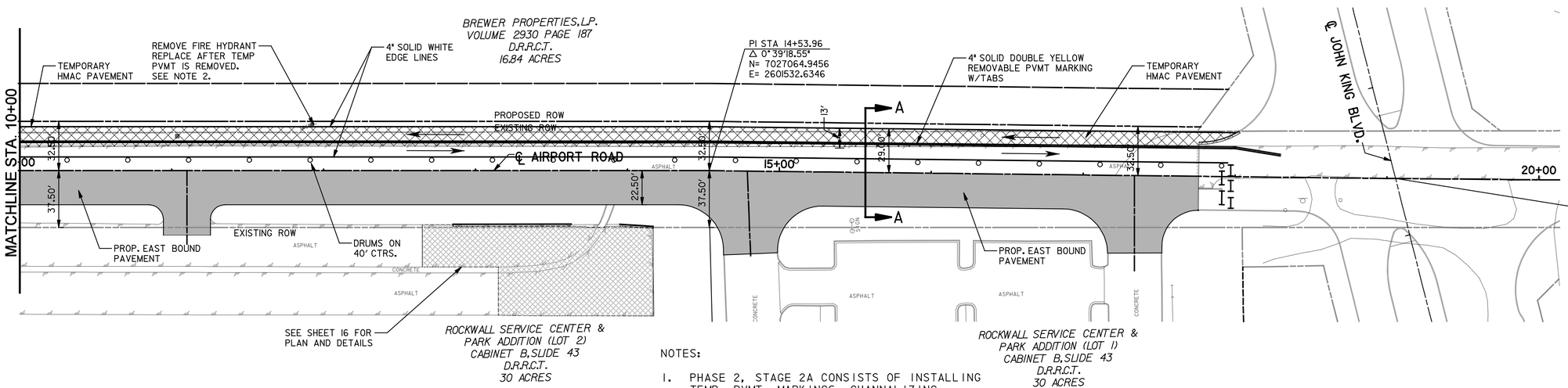

40 0 40 80
SCALE IN FEET
HORIZONTAL

N

LEGEND

- STAGE 2A
- STAGE 2B
- TEMP HMAC PVMT
- TYPE III BARRICADE
- CHANNELIZING DRUM

NOTES:

1. PHASE 2, STAGE 2A CONSISTS OF INSTALLING TEMP. PVMT. MARKINGS, CHANNALIZING DRUMS AND SHIFTING ALL TRAFFIC OVER TO NORTH SIDE OF PROPOSED CENTERLINE. THEN CONSTRUCT NEW PAVEMENT FROM STA 4+00 TO END OF PAVEMENT STA 17+76.14.
2. PHASE 2, STAGE 2B SHALL BE CONSTRUCTED AFTER STAGE 2A PVMT IS COMPLETED. SEE SHEET 10 FOR DETOUR DETAILS.

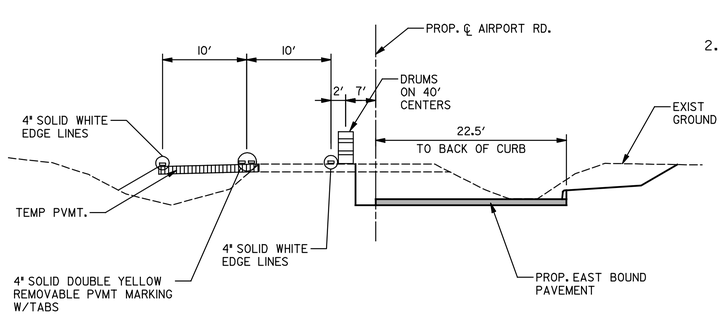

SECTION A-A

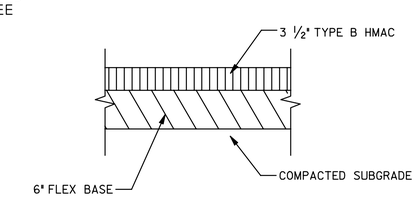

TEMPORARY HMAC PAVEMENT

RECORD DRAWING

This drawing is a compilation of the original sealed engineering drawing and modifications by addenda, change orders and information furnished by the contractor. Information shown that was provided by the contractor and others not associated with the design engineer cannot be verified for accuracy or completeness. Original sealed drawing is on file at the office of AECOM Technical Services, Inc., TBPE REG. NO. F-3580

ORIGINAL DRAWING SEALED & SIGNED BY
T.H. Gaertner, P.E.
TX NO. 37124

NO.	REVISION	BY	DATE

AIRPORT ROAD

PHASING & TRAFFIC CONTROL PLAN
CONSTRUCTION PHASE 2 - STAGE 2A,2B

City of Rockwall, Texas

AECOM

AECOM TECHNICAL SERVICES, INC.
16000 DALLAS PARKWAY, SUITE 350
DALLAS TEXAS 75248
WWW.AECOM.COM
TBPE REG. NO. F-3580

Unit	PW-DAL	Scale:	Horz: AS SHOWN Vert: AS SHOWN	Date	8/2/2012
Designed	THG	Checked	THG	Project No.	60004153
Drawn	FG	Approved	THG	Sheet	9 of 26

\\usdal1fp002\PW\43281\Airport_Road\CADD\Sheet\Airport Road_Record Drawings_8-3-10\09_TCP_03.dgn
8/7/2012