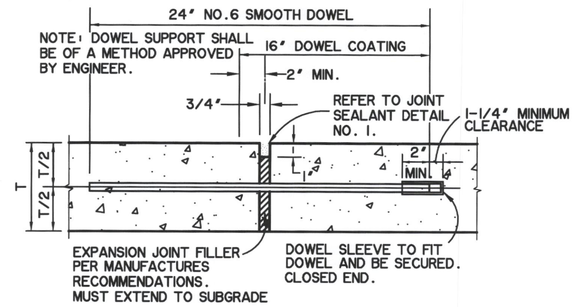

EXPANSION JOINT

N.T.S.

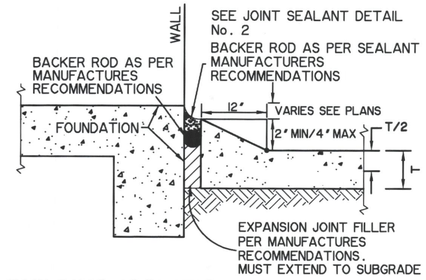

BUILDING ISOLATION JOINT

N.T.S.

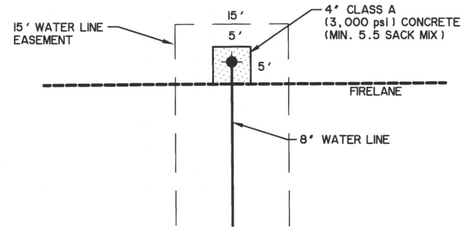

FIRE HYDRANT PAVING DETAIL

N.T.S.

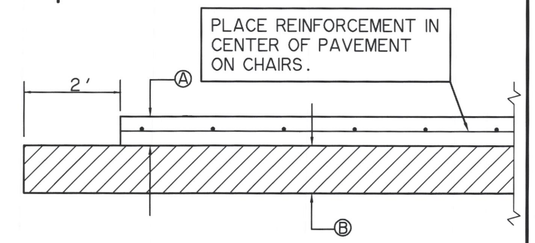

CONCRETE PAVEMENT SECTIONS

N.T.S.

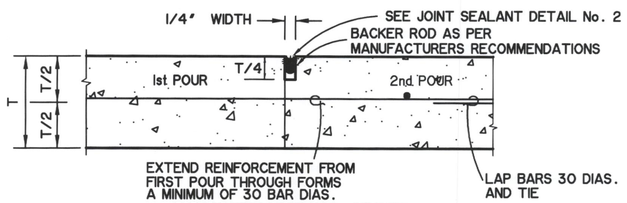

CONSTRUCTION JOINT

N.T.S.

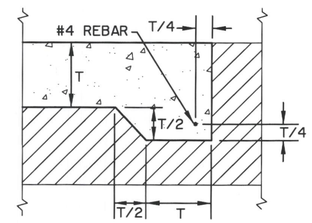

T = PAVEMENT THICKNESS

THICKENED EDGE DETAIL

N.T.S.

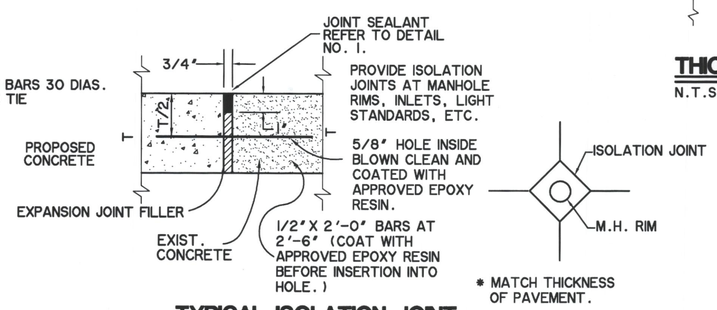

TYPICAL ISOLATION JOINT

N.T.S.

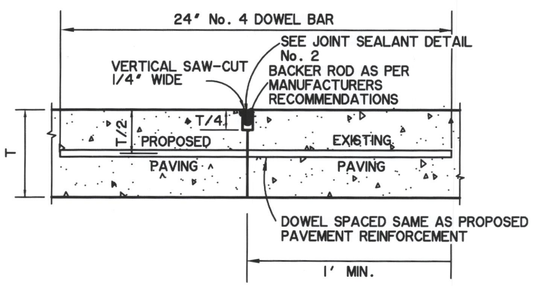

BUTT JOINT

N.T.S.

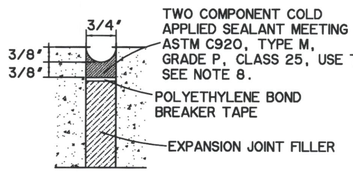

JOINT SEALANT DETAIL No. 1 SEAL FOR EXPANSION JOINT

N.T.S.

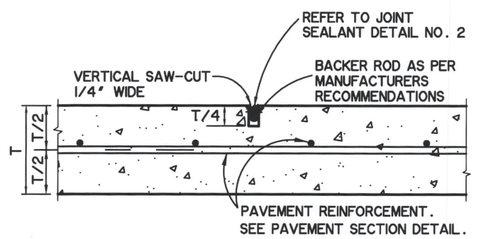

SAWED CONTRACTION JOINT

N.T.S.

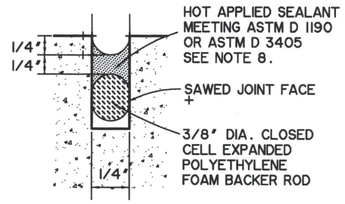

JOINT SEALANT DETAIL No. 2 SEAL FOR SAWED, CONSTRUCTION & BUTT JOINT

N.T.S.

JOINT NOTES:

T = PAVEMENT THICKNESS

1. CONTRACTOR MAY ELECT TO USE DOWELED CURB OR MONOLITHIC CURB
2. DOWEL BARS PLACED INTO EXISTING PAVEMENT SHALL BE DRILLED INTO PAVEMENT HORIZONTALLY BY USE OF A MECHANICAL RIG. DRILLING BY HAND IS NOT ACCEPTABLE, PUSHING DOWEL BARS INTO GREEN CONCRETE IS NOT ACCEPTABLE. SECURE DOWEL BARS IN EXISTING PAVING WITH EPOXY GROUT.
3. POLYETHYLENE FOAM BACKER ROD DOES NOT SIT ON BOTTOM OF SAW-CUT JOINT. PLACE AT DEPTH INDICATED IN DETAIL.
4. IF SEALANT PROTRUDES ABOVE THE SURFACE OF THE PAVEMENT, IT MUST BE REMOVED AND REPLACED.
5. SUBMIT MANUFACTURER'S LITERATURE FOR SEALANT, DOCUMENTING PRODUCT COMPLIES WITH ASTM SPECIFICATIONS AND PROVIDING MANUFACTURER'S RECOMMENDATIONS FOR APPLICATION. FOLLOW MANUFACTURER'S RECOMMENDATIONS ON USE OF THE PRODUCT.
6. THE CONSTRUCTION JOINT IS TO BE USED BETWEEN SEPARATE POURS OF PROPOSED PAVEMENT. NOTE THAT IT REQUIRES THE REINFORCEMENT TO BE EXTENDED THROUGH THE FORM TO TIE TO THE NEXT POUR. THE BUTT JOINT IS TO BE USED BETWEEN EXISTING CONCRETE PAVEMENT (STREET OR DRIVEWAY) AND PROPOSED PAVEMENT, UNLESS AN EXPANSION JOINT IS CALLED FOR.
7. JOINT SEALANTS SHALL BE INSTALL SOON AFTER JOINTS ARE SAWED AND/OR COMPLETED. THE JOINTS SHALL BE SEALED BEFORE A RAIN EVENT OCCURS AFTER SAWING OR COMPLETING THE JOINT.
8. JOINT SEALANTS MAY BE REQUIRED BY ARCHITECT OR OWNER TO BE GREY SILICONE TYPE SEALANTS MEETING ASTM C639, ASTM C679, ASTM C792, ASTM C793, ASTM D412 AND ASTM D792.

NOTES:

1. PAVEMENT SECTION

   A. 5" 3,600 PSI CONCRETE (MIN. 6.5 SACK MIX) REINFORCED WITH #3 BARS @ 18" C/C BOTH WAYS PLACED ON CHAIRS WITH FIVE (5) PERCENT (± 1 PERCENT) ENTRAINED AIR TO IMPROVE WORKABILITY AND DURABILITY.

   8" 3,600 PSI CONCRETE (MIN. 6.5 SACK MIX) REINFORCED WITH #3 BARS @ 18" C/C BOTH WAYS PLACED ON CHAIRS WITH FIVE (5) PERCENT (± 1 PERCENT) ENTRAINED AIR TO IMPROVE WORKABILITY AND DURABILITY.

   9" 3,600 PSI CONCRETE (MIN. 6.5 SACK MIX) REINFORCED WITH #3 BARS @ 18" C/C BOTH WAYS PLACED ON CHAIRS WITH FIVE (5) PERCENT (± 1 PERCENT) ENTRAINED AIR TO IMPROVE WORKABILITY AND DURABILITY.

   B. LIME STABILIZED SUBGRADE WITH 8% LIME (BY DRY SOIL WEIGHT). LIME STABILIZATION SHOULD BE PERFORMED IN ACCORDANCE WITH ITEM 260, CURRENT "STANDARD SPECIFICATIONS FOR CONSTRUCTION AND MAINTENANCE OF HIGHWAYS, STREETS, AND BRIDGES," TEXAS DEPARTMENT OF TRANSPORTATION (TxDOT) OR APPLICABLE STANDARDS.

PAVEMENT DEPTH	LIME SUBGRADE DEPTH
< 8 INCHES	6 INCHES
>= 8 INCHES	8 INCHES

2. APPLICABLE PROVISIONS OF THE STANDARD SPECIFICATIONS FOR PUBLIC WORKS CONSTRUCTION PREPARED BY THE NORTH CENTRAL TEXAS COUNCIL OF GOVERNMENTS 3RD ADDITION. COARSE AGGREGATE FOR CONCRETE SHALL BE GRADE No. 2. AIR ENTRAINMENT SHALL BE MIN. 6%+/-1.5% AND, AS A MINIMUM, THE SECTION SHOULD BE REINFORCED WITH NO. 3 BARS ON 18 INCH CENTERS IN BOTH DIRECTIONS,
3. MATERIAL AND CONSTRUCTION METHODS SHALL CONFORM TO THE APPLICABLE PROVISIONS OF THE STANDARD SPECIFICATIONS FOR PUBLIC WORKS CONSTRUCTION PREPARED BY THE NORTH CENTRAL TEXAS COUNCIL OF GOVERNMENTS 3rd ADDITION. COARSE AGGREGATE FOR CONCRETE SHALL BE GRADE No. 2. AIR ENTRAINMENT SHALL BE 4% - 6%, THE SECTION SHOULD BE REINFORCED WITH NO. 3 BARS ON 18 INCH CENTERS IN BOTH DIRECTIONS,
4. DO NOT PLACE SAND OR SELECT FILL BENEATH PAVEMENT FOR LEVEL UP COURSE.
5. ALL PAVEMENT, BASE AND SUBGRADE SHALL BE PREPARED AND CONSTRUCTED AS RECOMMENDED IN THE GEOTECH REPORT No. G120084 DATED FEBRUARY 20, 2012

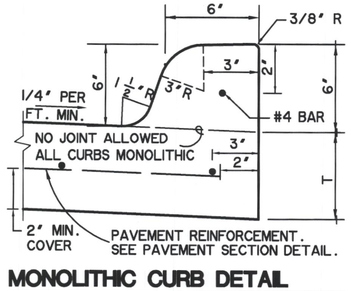

MONOLITHIC CURB DETAIL

N.T.S.

FILE: PAVING DETAILS-1-12002.01.dwg

TIME: 15:24

DATE: 03-23-2015

SSOE

Turner
Construction Managers/General Contractors
460 West Dussel Drive
Maumee, Ohio 43537
p| 419.893.7000 f| 419.893.1741
www.turnerconstruction.com/lathrop

CONSULTANTS:

PREPARED BY:
WIER & ASSOCIATES, INC.
ENGINEERS SURVEYORS LAND PLANNERS
701 HIGHLANDER BLVD., SUITE 300 ARLINGTON, TEXAS 76015 METRO (817)467-7700
Texas Firm Registration No. F-2776 www.WierAssociates.com

SEAL ON THIS DOCUMENT AUTHORIZED BY:

STATE OF TEXAS
DARRELL J. BOSWORTH
112702
REGISTERED PROFESSIONAL ENGINEER
4-22-15

SEAL ID:
DATE:

PROJECT INFORMATION:

ROCKWALL TECHNOLOGY PARK PHASE III
BIMBO BAKERIES USA EXPANSION
ROCKWALL, TEXAS

CLIENT INFORMATION:

BIMBO BAKERIES, USA
1810 EAST RIDGE PIKE ROAD
Norristown, Pa.
19404-0110

CLIENT PROJECT NO: 00-00000-00

NO.	DATE	SUBJECT
1	XX\XX\XX X	REVISION NAME

REVISION OR ISSUE

PROJECT NO: WA # 12002.01
PROJECT MANAGER: JUSTIN BOSWORTH, P.E.
DESIGNED: JUSTIN BOSWORTH, P.E.
CHECKED:

DRAWING TITLE:

PAVING DETAILS

DRAWING NO:

C-P201