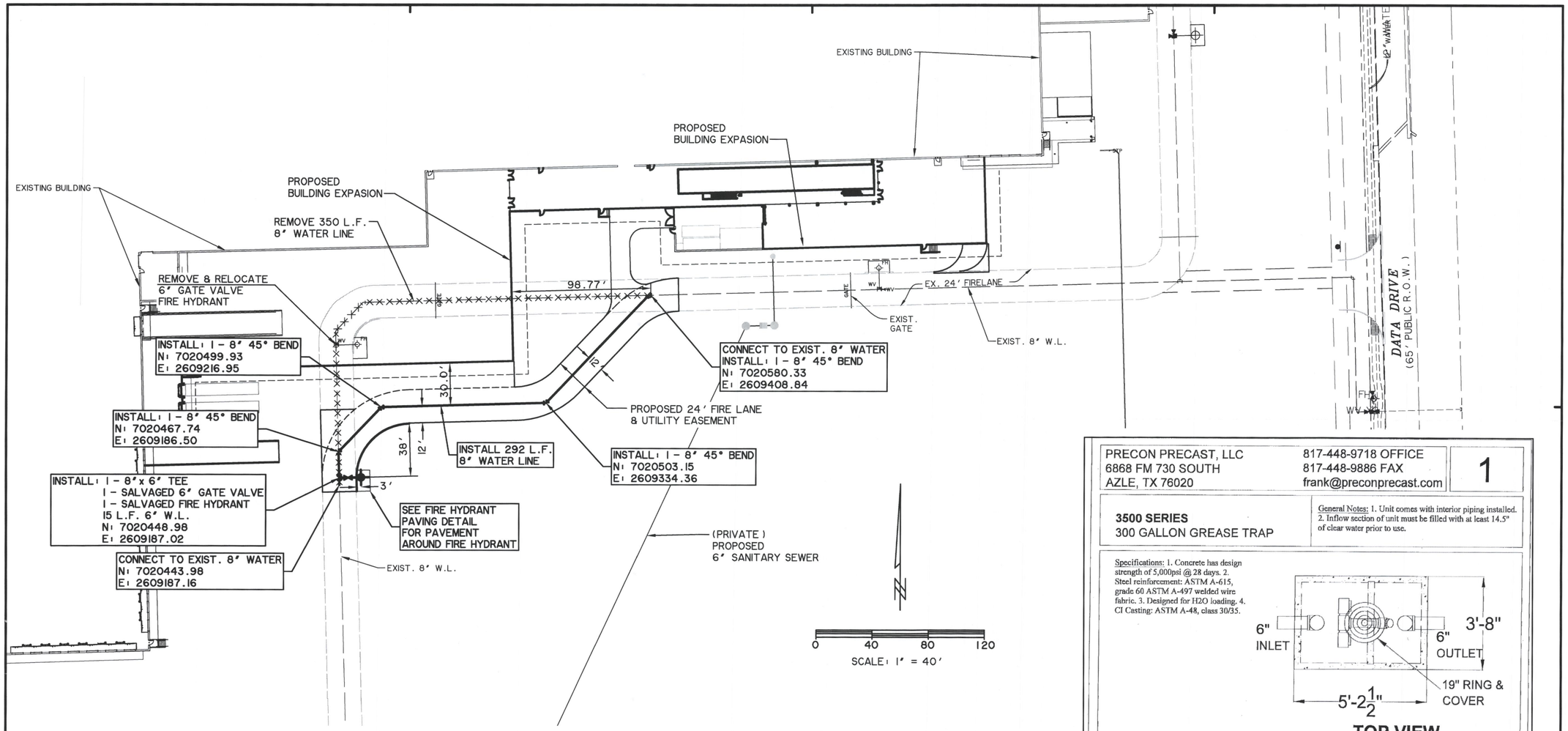

'ALL RESPONSIBILITY FOR ADEQUACY OF DESIGN REMAINS WITH THE DESIGN ENGINEER. THE CITY OF ROCKWALL, IN REVIEWING AND RELEASING THE PLANS FOR CONSTRUCTION, ASSUMES NO RESPONSIBILITY FOR ADEQUACY OR ACCURACY OF DESIGN.'

*** BENCH MARKS ***

BM A
AN 'X' CUT IN THE BACK OF CURB LOCATED AT THE SOUTH RIGHT-OF-WAY LINE OF SPRINGER ROAD ±2470' EAST OF THE INTERSECTION OF SPRINGER ROAD AND F.M. 549.
598.80 FT.

BM B
AN 'X' CUT IN THE CENTERLINE OF WALK AT THE SOUTHEAST CORNER OF THE INTERSECTION OF DATA DRIVE AND DISCOVERY BLVD.
600.88 FT.

NOTES:
1. CONTRACTOR SHALL ADJUST LOCATION OF WATER LINE AS REQUIRED TO AVOID CONFLICTS WITH STORM SEWER OR UTILITIES.
2. ALL ON-SITE UTILITIES ARE PRIVATE UNLESS OTHERWISE NOTED.
3. SEE MEP PLANS FOR CONNECTIONS TO BUILDING.
4. ALL WATER LINES SHALL HAVE A MINIMUM COVER OF 48" MEASURED FROM TOP OF PIPE TO TOP OF PAVEMENT.
5. FIRE HYDRANTS SHALL BE 3' FROM BACK OF CURB AND HAVE 3' RADIUS CLEARANCE

'ALL SANITARY SEWER WORK DESIGNATED AS 'PRIVATE' IN THIS SET OF PLANS SHALL BE INSTALLED IN ACCORDANCE WITH THE INTERNATIONAL PLUMBING CODE, PERMITTED AND INSPECTED BY THE CITY BUILDING INSPECTION DEPARTMENT AND INSTALLED BY A LICENSED PLUMBER.'

CAUTION !!
EXISTING UTILITIES ARE INDICATED ON THE PLANS FROM AVAILABLE INFORMATION. IT SHALL BE THE RESPONSIBILITY OF THE CONTRACTOR TO VERIFY THE LOCATION OF ALL UTILITIES, TO NOTIFY ALL UTILITY COMPANIES OF THE CONTRACTORS OPERATIONS, TO PROTECT ALL UTILITIES FROM DAMAGE, TO REPAIR ALL UTILITIES DAMAGED DUE TO THE CONTRACTORS OPERATIONS, AND TO NOTIFY THE ENGINEER PROMPTLY OF ALL CONFLICTS OF THE WORK WITH EXISTING UTILITIES.

PRECON PRECAST, LLC 6868 FM 730 SOUTH AZLE, TX 76020	817-448-9718 OFFICE 817-448-9886 FAX frank@preconprecast.com	1

3500 SERIES
300 GALLON GREASE TRAP

General Notes: 1. Unit comes with interior piping installed. 2. Inflow section of unit must be filled with at least 14.5" of clear water prior to use.

Specifications: 1. Concrete has design strength of 5,000psi @ 28 days. 2. Steel reinforcement: ASTM A-615, grade 60 ASTM A-497 welded wire fabric. 3. Designed for H2O loading. 4. CI Casting: ASTM A-48, class 30/35.

TOP VIEW

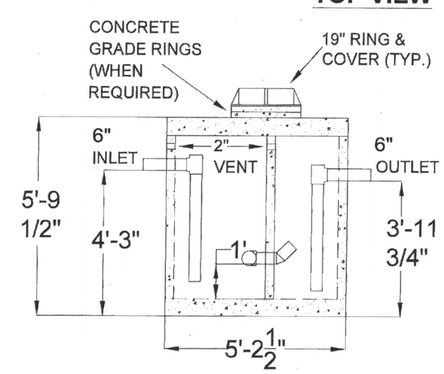

SIDE VIEW

	APPROVED FOR PRODUCTION	AUTHORIZED BY
300galgtsbdwg	DATE:	PRINT:
FILE NAME:	JOB TITLE:	SIGN:

TIME: 8:34 FILE: UTILITY PLAN-12002.01.dwg

ssoe

Turner
Construction Managers/General Contractors
460 West Dussel Drive
Maumee, Ohio 43537
p| 419.893.7000 f| 419.893.1741
www.turnerconstruction.com/lathrop

CONSULTANTS:
PREPARED BY:
WIER & ASSOCIATES, INC.
ENGINEERS SURVEYORS LAND PLANNERS
701 HIGHLANDER BLVD., SUITE 300 ARLINGTON, TEXAS 76015 METRO (817)467-7700
Texas Firm Registration No. F-2776 www.WierAssociates.com

SEAL ON THIS DOCUMENT AUTHORIZED BY:

STATE OF TEXAS
DARRELL J. BOSWORTH
112702
REGISTERED PROFESSIONAL ENGINEER
4-22-15

SEAL ID:
DATE:

PROJECT INFORMATION:

ROCKWALL TECHNOLOGY PARK PHASE III
BIMBO BAKERIES USA EXPANSION
ROCKWALL, TEXAS

CLIENT INFORMATION:

BIMBO BAKERIES, USA
1810 EAST RIDGE PIKE ROAD
Norristown, Pa.
19404-0110

CLIENT PROJECT NO: 00-00000-00

NO.	DATE	SUBJECT
1	XX\XX\XX	REVISION NAME

REVISION OR ISSUE

PROJECT NO:	WA # 12002.01
PROJECT MANAGER:	JUSTIN BOSWORTH, P.E.
DESIGNED:	JUSTIN BOSWORTH, P.E.
CHECKED:	

DRAWING TITLE:

UTILITY PLAN

DRAWING NO:

C-U100

DATE: 03-25-2015