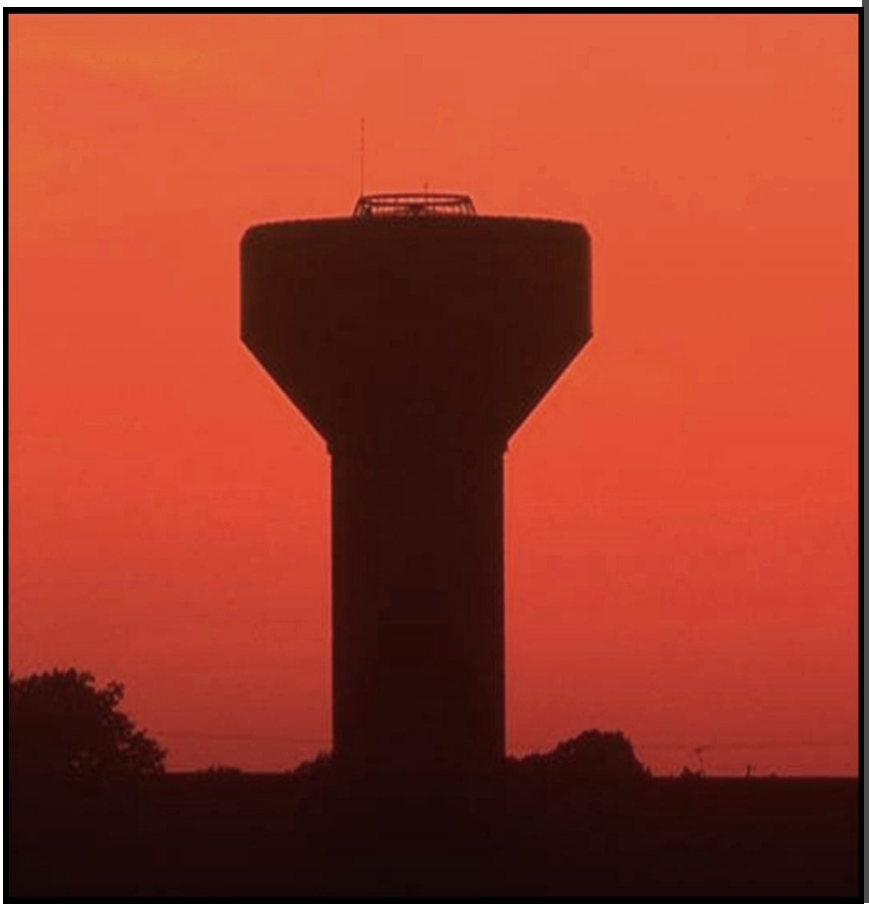

OWNER
CITY OF ROCKWALL, TEXAS
2855 SOUTH GOLIAD
ROCKWALL, TEXAS 75087
(972) 771-7746

ENGINEER
BIRKHOFF, HENDRICKS & CONWAY
11910 GREENVILLE AVENUE
SUITE 600
DALLAS, TEXAS 75243
(214) 361-7900

CONTRACTOR
LANDMARK STRUCTURES I, LP
1665 HARMON ROAD
FORT WORTH, TEXAS 76177
(817) 439-8888

COUNTRY LANE 2.0 MG
ELEVATED STORAGE TANK
CITY OF ROCKWALL, TEXAS

OPERATIONS & MAINTENANCE MANUAL

COUNTRY LANE 2.0 MG
ELEVATED STORAGE TANK

CITY OF ROCKWALL, TEXAS

SPECIFICATION SECTION: TS1

OPERATIONS & MAINTENANCE MANUAL

ELEVATED TANK DRAWINGS

OWNER

CITY OF ROCKWALL
2855 SOUTH GOLIAD
ROCKWALL, TEXAS 75087
(972) 771-7746

GENERAL CONTRACTOR

LANDMARK STRUCTURES I, LP
1665 HARMON ROAD
FORT WORTH, TEXAS 76177
(817) 439-8888

COUNTRY LANE 2.0 MG ELEVATED STORAGE TANK
FOR 700 SERVICE AREA
CITY OF ROCKWALL, TEXAS

SPEC. SECTION: TS1
ARTICLE NO. 1.07

ELEVATED TANK DRAWINGS & CALCULATION DESIGN BASIS
TABLE OF CONTENTS

SECTION I – CALCULATION DESIGN BASIS

DWG	REV	DESCRIPTION
PGS 1 THRU 6	1	CALCULATION DESIGN BASIS

SECTION II – TANK CAPACITY / WATER LEVEL CHART

DWG	REV	DESCRIPTION
S-21		TANK CAPACITY / WATER LEVEL CHART

SECTION III – STRUCTURAL

DWG	REV	DESCRIPTION
S1		TANK ELEVATION
S2-B	A	TANK SECTION
S3-A		FOUNDATION PLAN
S3-B	C	FOUNDATION PLAN
S4-B1	A	FOUNDATION / LOWER WALL / GRADE SLAB – SECTION / CONCRETE DETAILS
S4-B2	B	FOUNDATION / LOWER WALL / GRADE SLAB – REINFORCING STEEL
S4-B3		PEDESTAL WALL – OPENING REINFORCEMENT DETAILS
S4-B4		PEDESTAL WALL – WWF SPLICE DETAILS
S4-B5		GRADE FLOOR SLAB – ANTENNA CONDUIT PIT DETAILS
S5-B6		ELEVATOR PIT PLAN
S5-B7		ELEVATOR PIT ELEVATION
S5-B8		ELEVATED PIT – REINFORCING STEEL
S5-A1	D	SUPPORT WALL – OPENINGS / SLEEVE LOCATIONS
S5-A2	C	LOWER PEDESTAL OPENINGS – ELEVATION
S5-B		SINGLE DOOR – OPENING / REINFORCEMENT DETAILS
S5-D1	B	OVERHEAD DOOR – OPENING / REINFORCEMENT DETAILS
S5-D2		OVERHEAD DOOR – OPENING / SECTIONS
S5-D3		OVERHEAD DOOR – THRESHOLD DETAILS
S5-D4		BEAM SEAT INSERT – PILASTER SECTION
S5-D5		BEAM SEAT INSERT – OVERHEAD TRUCK DOOR SECTION
S5-E		OVERFLOW SLEEVE – OPENING / REINFORCEMENT DETAILS
S5-G	A	ANTENNA SLEEVE BOXOUT – OPENING / REINFORCEMENT DETAILS
S5-H	A	POWER VENTILATION WALL FAN W/LOUVRE – OPENING / REINFORCEMENT DETAILS
S5-J		PASSIVE WALL LOUVRE – OPENING / REINFORCEMENT DETAILS

DWG	REV	DESCRIPTION
S5-K		LOUVER BOXOUT – OPENING / REINFORCEMENT DETAILS
S5-L1		INTERMEDIATE FLOOR – BEAM SEAT INSERT
S5-L2		INTERMEDIATE FLOOR – BEAM SEAT INSERT
S6		DOME FLOOR SLAB – PLAN
S6-A1		UPPER WALL / RING BEAM / DOME SLAB – SECTION / CONCRETE DETAILS
S6-A2		UPPER WALL / RING BEAM / DOME SLAB – REINFORCING STEEL
S6-B1		DOME SLAB – INSERT DETAILS
S10-F		STEEL TANK – ELEVATION / SECTION
S10-G		STEEL TANK – WELDS LAYOUT
S11		STEEL TANK – ROOF PLAN
S12-B		STEEL TANK – ERECTION DETAILS
S14-A		STEEL TANK – RING BEAM CONNECTION
S15	A	STEEL TANK – ACCESS TUBE / TOP PLATFORM
S15-A1		TOP PLATFORM – PLAN / SECTION
S15-A2		TOP PLATFORM – DETAILS
S15-B1	A	ACCESS TUBE – LAYOUT
S15-B2	A	ACCESS TUBE – DETAILS
S15-B3		ACCESS TUBE – DETAILS
S15-C		ACCESS TUBE – FLOOR SLEEVE
S17-E1.1	A	INTERMEDIATE FLOOR (574.75") – PLAN / GENERAL DESIGN
S17-E1.2	B	INTERMEDIATE FLOOR (EL. 589.92') – PLAN / GENERAL DESIGN
S17-E2.0	A	INTERMEDIATE FLOOR – PERIMETER ANGLE LAYOUT
S17-E2.1	A	INTERMEDIATE FLOOR – STRUCTURAL FRAMING PLAN
S17-E2.2A	A	INTERMEDIATE FLOOR – STRUCTURAL FRAMING DETAILS
S17-E2.2B	A	INTERMEDIATE FLOOR – STRUCTURAL FRAMING DETAILS
S17-E2.3		INTERMEDIATE FLOOR – ELEVATOR FRAMING
S17-E2.4		INTERMEDIATE FLOOR – INLET / OUTLET FRAMING
S17-E2.5		INTERMEDIATE FLOOR – OVERFLOW FRAMING
S17-E2.6		INTERMEDIATE FLOOR – MANHOLE FRAMING
S17-E3.0	A	INTERMEDIATE FLOOR – STEEL DECK LAYOUT DETAILS
S17-E4.0	A	INTERMEDIATE FLOOR – CONCRETE AND REINFORCEMENT
S17-E6.0A	A	INTERMEDIATE FLOOR – STAIRWAY LAYOUT (1ST TO 2ND FLR.)
S17-E6.0B	A	INTERMEDIATE FLOOR – STAIRWAY LAYOUT (2ND TO 3RD FLOOR)
S17-E6.1		INTERMEDIATE FLOOR – STAIRWAY SECTIONS AND DETAILS
S20-B	C	REINFORCING STEEL DETAILS
S20-C	B	REINFORCING STEEL DETAILS
S20-D	B	REINFORCING STEEL DETAILS

SECTION IV – ACCESSORIES

DWG	REV	DESCRIPTION
300-A	A	SUPPORT WALL LADDERS / LANDINGS – GENERAL ARRANGEMENT
301-A1		STEEL LADDER – STANDARD DETAILS
301-B1		STEEL LADDER – SUPPORT / CONNECTION DETAILS
301-B2		STEEL LADDER – SUPPORT / CONNECTION DETAILS
301-B3		STEEL LADDER – ACCESS TUBE CONNECTION DETAILS

DWG	REV	DESCRIPTION
311-A		STEEL LADDER CAGE – STANDARD DETAILS
313-B		SAFETY CLIMB & HARNESS
314		SAFETY LANYARD ATTACHMENT
315-A1	A	INTERMEDIATE LANDING – PLAN
315-A2	A	INTERMEDIATE LANDING – ELEVATION & SECTIONS
315-A3		INTERMEDIATE LANDING – ELEVATION & SECTIONS
319-A1	A	TOP LANDING (46' Ø PEDESTAL) – PLAN
319-A2	B	TOP LANDING (46' Ø PEDESTAL) – SECTION
319-A3	B	TOP LANDING (46' Ø PEDESTAL) – ELEVATION
320-A	A	30" X 30" – ACCESS HATCH COVER – ASSEMBLY & INSTALLATION
322-A1		ROOF RAIL – PLAN / ELEVATION
323-A		24" VENT – ASSEMBLY & INSTALLATION
324-B		PAINT RAIL ACCESS HATCH
325-A1		30" TANK FLOOR MANHOLE – ASSEMBLY & INSTALLATION
327-A		PAINT RAIL ACCESS LOUVER
332-A	A	OBSTRUCTION LIGHT MOUNT DETAILS
332-B	A	ANTENNA MOUNT DETAILS
337-A		OVERHEAD DOOR JAMBS & HEADER – ASSEMBLY & INSTALLATION

SECTION V– MECHANICAL

DWG	REV	DESCRIPTION
401		MECHANICAL LAYOUT – PLAN
402-A		MECHANICAL LAYOUT – SECTION A – A
402-B		MECHANICAL LAYOUT – SECTION B – B
402-C		MECHANICAL LAYOUT – SECTION C – C
404-A		CONCRETE SUPPORTS & ENCASEMENT – PLAN
404-B		CONCRETE SUPPORTS & ENCASEMENT – DETAILS
405-A1		INLET / OUTLET RISER – ELEVATION
405-A2		INLET / OUTLET RISER – FLOOR PENETRATION DETAILS
406-A1		OVERFLOW RISER – ELEVATION
406-A2	A	OVERFLOW RISER / ACCESS TUBE – FLOOR PENETRATION
409-D1		RISER PIPE STANDARD TEMPORARY SUPPORT BRACKET DETAIL
409-D2		RISER PIPE EXTRA STANDARD TEMPORARY – SUPPORT BRACKET DETAIL
410-A		PIPING / MECHANICAL EQUIPMENT – LEGEND
410-B		PIPING / MECHANICAL EQUIPMENT – LEGEND
410-C		PIPING / MECHANICAL EQUIPMENT – LEGEND
424		RISER PIPE – EXPANSION JOINT
425-A		S.S. PIPE FABRICATION – RESTRAINED FLANGE ADAPTOR

SECTION VI – LIGHTNING PROTECTION

DWG	REV	DESCRIPTION
803-A1		LIGHTNING PROTECTION
803-C		LIGHTNING PROTECTION – INSTALLATION INSTRUCTIONS (U.S.A.)

I. CALCULATION DESIGN BASIS

CALCULATION DESIGN BASIS

FOR

CITY OF ROCKWALL, TEXAS

COUNTRY LANE 2.0 MG ELEVATED WATER TANK

ROCKWALL, TEXAS

Landmark Structures - Job No. 1190

Revision 1

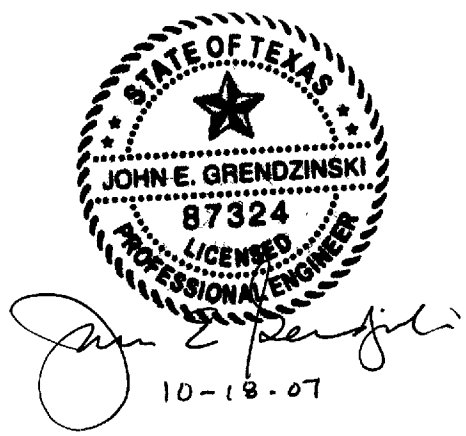

LANDMARK

CALCULATION DESIGN BASIS INDEX
CITY OF ROCKWALL, TEXAS
COUNTRY LANE 2.0 MG ELEVATED WATER TANK
ROCKWALL, TEXAS

Landmark Structures - Job No. 1190

Description	Page No.	Revision	Date
Cover Page		1	
Index Page	i	1	18-Oct-07
Design Basis			
1.a Design Specifications and Codes	1	1	18-Oct-07
1.b Unit Weights	1	1	"
1.c Structural Floor Loads	1	1	"
1.d Environmental Loads	1	1	"
1.e Soil Bearing Capacity	2		10-Jul-07
Structural Design			
2.a Service Component Loads	2		10-Jul-07
2.b Service Load Combinations	2		"
2.c Factored Load Combinations	2		"
2.d Annular Ring Foundation Analysis	3	1	18-Oct-07
2.e Concrete Support Structure	3	1	"
2.f Steel Tank	3	1	"
Foundation Design			
3.a Foundation Service Loads	4	1	18-Oct-07
3.b Service Load Bearing Pressure	4	1	"
3.c Service Load Overturning Stability Ratio	4	1	"

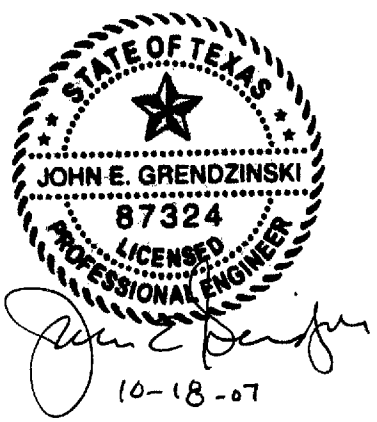

DESIGN BASIS

1.a Design Specifications and Codes

Birkhoff, Hendricks & Conway, L.L.P. Specification	TS1
American Water Works Association Standard	AWWA D100-05
Building Code Requirements for Structural Concrete	ACI 318-05
Minimum Design Loads for Buildings and Other Structures	ASCE 7-05

1.b Unit Weights

Water	62.4 lb/ft^3
Concrete	150 lb/ft^3
Soil and Backfill	100 lb/ft^3

1.c Structural Floor Loads

Number of Floors	2
Floor Dead Load	60 psf
Floor Live Load	125 psf

1.d Environmental Loads

Distributed Roof Snow Load	15 psf

AWWA D100-05 Wind Load

• Design wind speed	90 mph
• Wind exposure category	C
• Wind importance factor	1.15
• Wind gust factor	0.85
• Wind force drag coefficient (cylindrical)	0.60
• Wind force drag coefficient (conical)	0.50
Wind Shear at base (bottom of foundation)	156 kip
Wind Moment at base (bottom of foundation)	16,330 kip-ft

AWWA D100-05 Seismic Load

• Mapped spectral acceleration at 1-sec period, S_1	0.0615
• Mapped spectral acceleration at short period, S_s	0.1299
• Site class	C
• Seismic use group (essential facility)	IV
• Importance factor, I	1.50
• Seismic design category	C
• Response modification coefficient, R	2.0
• Site coefficient, F_v	1.70
• Site coefficient, F_a	1.20
• Design spectral acceleration at 1-sec period, S_{d1}	0.070
• Design spectral acceleration at short period, S_{ds}	0.104
• Procedure for determining ground motion acceleration	mapped
• Analysis method	modal
Factored Seismic Shear at base (bottom of foundation)	727 kip
Factored Seismic Moment at base (bottom of foundation)	105,541 kip-ft

1.e Soil Bearing Capacity

Net Allowable Bearing Capacity ..... 12,500 psf

The foundation is sized such that the net allowable bearing pressure is not exceeded with gravity or wind loads acting. A 33% increase in net allowable bearing pressure is used with earthquake load acting. The foundation does not unload with wind or earthquake load acting.

Net allowable bearing capacity is based on the Henley Johnston & Associates, Inc. reports:

- Geotechnical Investigation; Country Lane Elevated Storage Tank; City of Rockwall, Texas; HJA No. 8598; 27 September 2006

- Addendum Letter No. 8598-1; Country Lane Elevated Storage Tank; North Country Lane; Rockwall, Texas; HJA No. 8598-1; June 11, 2007

STRUCTURAL DESIGN

2.a Service Component Loads

The following notation represents the effect of component service loads included in the design.

D = dead load
F = water load
S = snow load
L = structural floor live load
G = 4 in. out-of-plumb moment (tank full)
W = wind load
E = horizontal seismic load

2.b Service Load Combinations

The following service load combinations are used to size the foundation.

1. D + G + F + S + L
2. D + F + L + W
3. 0.75 [(1 + 0.2 Sds/1.4) (D+F) + L + E/1.4]

The following service load combination checks foundation uplift.

4. D - W
5. (1 - 0.2 Sds/1.4) (D+F) - E/1.4

2.c Factored Load Combinations

The following factored load combinations are used for structural design of concrete elements. The load factors conform to ACI 318.

1. 1.4 (D+G) + 1.6 (F+S+L)
2. 1.2 (D+F) + 1.6 (L+W)
3. 1.2 (D+F) + 0.5 S + L + E + 0.2 Sds (D+F)
4. 0.9 D - 1.6 W
5. 0.9 D + F - E - 0.2 Sds (D+F)

2.d Annular Ring Foundation Analysis

The annular ring foundation is proportioned to have its centroid at the wall centerline. Structural design is based on a one-way radial strip of unit width. Sufficient flexural reinforcement is provided to limit service reinforcement stress to approximately 30 ksi under the action of dead plus water load.

2.e Concrete Support Structure

Concrete elements of the support structure are designed in accordance with applicable provisions of ACI 318.

Specified concrete compressive strength for design	
• Wall Lifts 1-15	4,500 psi
• Dome	4,000 psi
Concrete Support Wall	
• Wall thickness	13 in
• Compression stress (dead load plus water)	967 psi
• Minimum Reinforcement ratio - horizontal	0.0025
• Minimum Reinforcement ratio - vertical	0.0021
• Reinforcement ratio (vertical) in top lift	0.0103
Concrete Dome Floor	
• Dome floor thickness	11 in
• Compression stress (dead load plus water)	529 psi
• Reinforcement ratio - minimum radial	0.0043
• Reinforcement ratio - circumferential	0.0047
Ringbeam	
• Reinforcement ratio - circumferential	0.0060
• Reinforcement service load tension stress (partially full)	10,200 psi
• Concrete compression stress (tank full)	510 psi

2.f Steel Tank

Design of steel plate elements conforms to applicable provisions of AWWA D100. Design of roof beams conforms to Specification for Structural Steel Buildings - Allowable Stress Design 9th edition.

FOUNDATION DESIGN

3.a Foundation Service Loads

• D: dead loads	7,906 kip
• F: water load	17,924 kip
• S: snow load	106 kip
• L: floor live load	395 kip
• G: out-of-plumb moment	6,306 kip-ft
• W: wind moment	16,330 kip-ft
• E: seismic moment (factored)	105,540 kip-ft

3.b Service Load Bearing Pressure

Net Bearing Pressure:

• D + G + F + S + L	12,120 psf
• D + F + L + W	12,530 psf
• 0.75 [(1 + 0.2 Sds/1.4) (D+F) + L + E/1.4]	11,580 psf

Uplift Contact Pressure (+ compression):

• D - W	3,380 psf
• (1 - 0.2 Sds/1.4) (D+F) - E/1.4	9,830 psf

3.c Service Load Overturning Stability Ratio

• D - W	11.8
• (1 - 0.2 Sds/1.4) (D+F) - E/1.4	6.3

II. TANK CAPACITY / WATER LEVEL CHART

GALLONAGE CHART

CAPACITY - 2,000

RANGE - 40.00

HWL - 698.75

LWL - 658.75

PROJECT - *CITY OF ROCKWALL, TEXAS*

2.0 MG ELEVATED WATER STORAGE TANK

(L.S.LP Job No. 1190)

DATE - 06 / 07

DRAW DOWN	GALLONS REM/FT	GALLONS REM/TOT	GALLONS REMAINING	WATER ELEV	GALLONS / ,000 FT	GALLONS / ,000 TOTAL	GALLONS / ,000 REMAIN	DRAW DOWN
0	0	0	2,000,000	**698.75**	**0**	**0**	**2,000**	**0**
1	54,940	54,940	1,945,060	**697.75**	**55**	**55**	**1,945**	**1**
2	55,954	110,894	1,889,106	**696.75**	**56**	**111**	**1,889**	**2**
3	56,008	166,902	1,833,098	**695.75**	**56**	**167**	**1,833**	**3**
4	56,008	222,910	1,777,090	**694.75**	**56**	**223**	**1,777**	**4**
5	56,008	278,918	1,721,082	**693.75**	**56**	**279**	**1,721**	**5**
6	56,008	334,926	1,665,074	**692.75**	**56**	**335**	**1,665**	**6**
7	56,008	390,934	1,609,066	**691.75**	**56**	**391**	**1,609**	**7**
8	56,008	446,942	1,553,058	**690.75**	**56**	**447**	**1,553**	**8**
9	56,008	502,950	1,497,050	**689.75**	**56**	**503**	**1,497**	**9**
10	56,008	558,958	1,441,042	**688.75**	**56**	**559**	**1,441**	**10**
11	56,008	614,966	1,385,034	**687.75**	**56**	**615**	**1,385**	**11**
12	56,008	670,974	1,329,026	**686.75**	**56**	**671**	**1,329**	**12**
13	56,008	726,982	1,273,018	**685.75**	**56**	**727**	**1,273**	**13**
14	56,008	782,990	1,217,010	**684.75**	**56**	**783**	**1,217**	**14**
15	56,008	838,998	1,161,002	**683.75**	**56**	**839**	**1,161**	**15**
16	56,008	895,006	1,104,994	**682.75**	**56**	**895**	**1,105**	**16**
17	56,008	951,014	1,048,986	**681.75**	**56**	**951**	**1,049**	**17**
18	56,008	1,007,022	992,978	**680.75**	**56**	**1,007**	**993**	**18**
19	56,008	1,063,030	936,970	**679.75**	**56**	**1,063**	**937**	**19**
20	56,008	1,119,038	880,962	**678.75**	**56**	**1,119**	**881**	**20**
21	56,008	1,175,046	824,954	**677.75**	**56**	**1,175**	**825**	**21**
22	56,008	1,231,054	768,946	**676.75**	**56**	**1,231**	**769**	**22**
23	56,008	1,287,062	712,938	**675.75**	**56**	**1,287**	**713**	**23**
24	56,008	1,343,070	656,930	**674.75**	**56**	**1,343**	**657**	**24**
25	55,937	1,399,007	600,993	**673.75**	**56**	**1,399**	**601**	**25**
26	54,301	1,453,308	546,692	**672.75**	**54**	**1,453**	**547**	**26**
27	52,064	1,505,372	494,628	**671.75**	**52**	**1,505**	**495**	**27**
28	49,873	1,555,245	444,755	**670.75**	**50**	**1,555**	**445**	**28**
29	47,729	1,602,974	397,026	**669.75**	**48**	**1,603**	**397**	**29**
30	45,633	1,648,607	351,393	**668.75**	**46**	**1,649**	**351**	**30**
31	43,583	1,692,190	307,810	**667.75**	**44**	**1,692**	**308**	**31**
32	41,580	1,733,770	266,230	**666.75**	**42**	**1,734**	**266**	**32**
33	39,624	1,773,394	226,606	**665.75**	**40**	**1,773**	**227**	**33**
34	37,716	1,811,110	188,890	**664.75**	**38**	**1,811**	**189**	**34**
35	35,854	1,846,964	153,036	**663.75**	**36**	**1,847**	**153**	**35**
36	34,039	1,881,003	118,997	**662.75**	**34**	**1,881**	**119**	**36**
37	32,272	1,913,275	86,725	**661.75**	**32**	**1,913**	**87**	**37**
38	30,551	1,943,826	56,174	**660.75**	**31**	**1,944**	**56**	**38**
39	28,877	1,972,703	27,297	**659.75**	**29**	**1,973**	**27**	**39**
40	27,297	2,000,000	0	**658.75**	**27**	**2,000**	**0**	**40**

ACTUAL TANK CAPACITY **2,147,000** **GALLONS**

VOLUME LEFT AT LOW WATER LEVEL **147,000** **GALLONS**

DWG #S - 21

III. STRUCTURAL

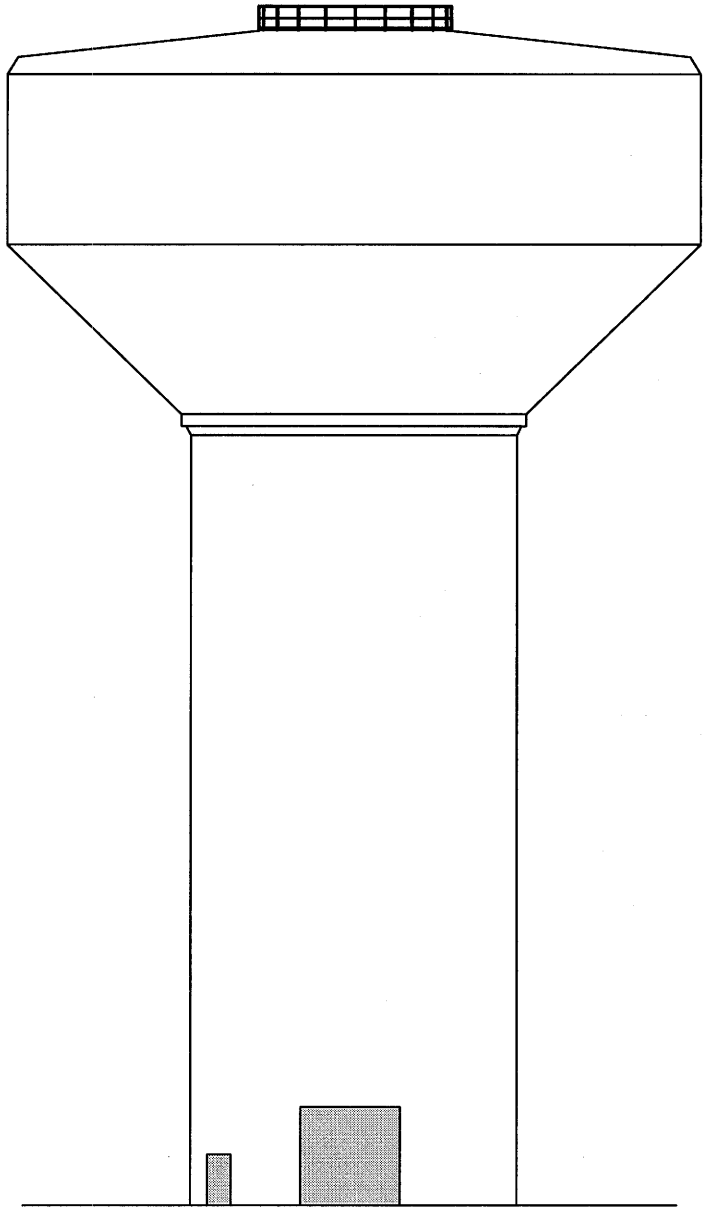

STATE OF TEXAS
JOHN E. GRENDZINSKI
87324
LICENSED
PROFESSIONAL ENGINEER
08-17-07

Project:

CITY OF ROCKWALL, TEXAS

2.0 MG ELEVATED WATER STORAGE TANK

No.:	Date:	By:	Revision:

TANK ELEVATION

Contractor:

LANDMARK
Landmark Structures I, LP
1665 Harmon Road Fort Worth, Texas, 76177
Tel: (817) 439-8888 Fax: (817) 439-9001

Design:	Dwn:	Job Number:
JEG	KKC	1190
Chk:	Alloc:	Dwg. Number:
DK		S1
Issued Date:	Scale:	
06 / 07	N.T.S.	

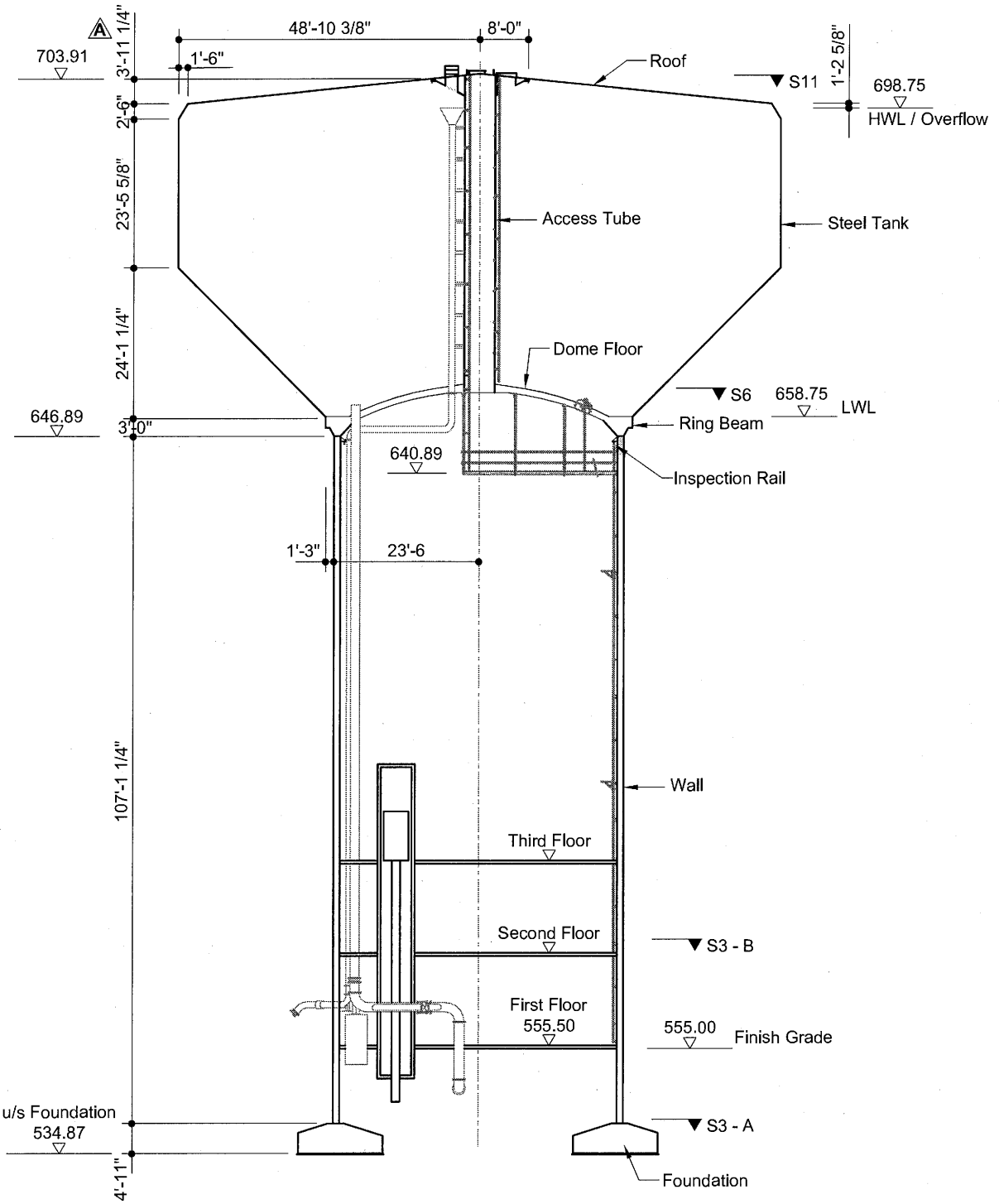

NOTES :

1. Plan views correspond to sections indicated. Refer to sections for details, material specifications and procedures.

STATE OF TEXAS
JOHN E. GRENDZINSKI
87324
LICENSED
PROFESSIONAL ENGINEER
09-07-07

Project:
CITY OF ROCKWALL, TEXAS
2.0 MG ELEVATED WATER STORAGE TANK

No.:	Date:	By:	Revision:
A	23/Aug/07	DK	Roof Rise Dimension Change

TANK SECTION

Contractor:
LANDMARK
Landmark Structures I, LP
1665 Harmon Road Fort Worth, Texas, 76177
Tel: (817) 439-8888 Fax: (817) 439-9001

Design: JEG	Dwn: KKC	Job Number: 1190
Chk: DK	Alloc:	Dwg. Number: S2 - B
Issued Date: 06 / 07	Scale: N.T.S.	

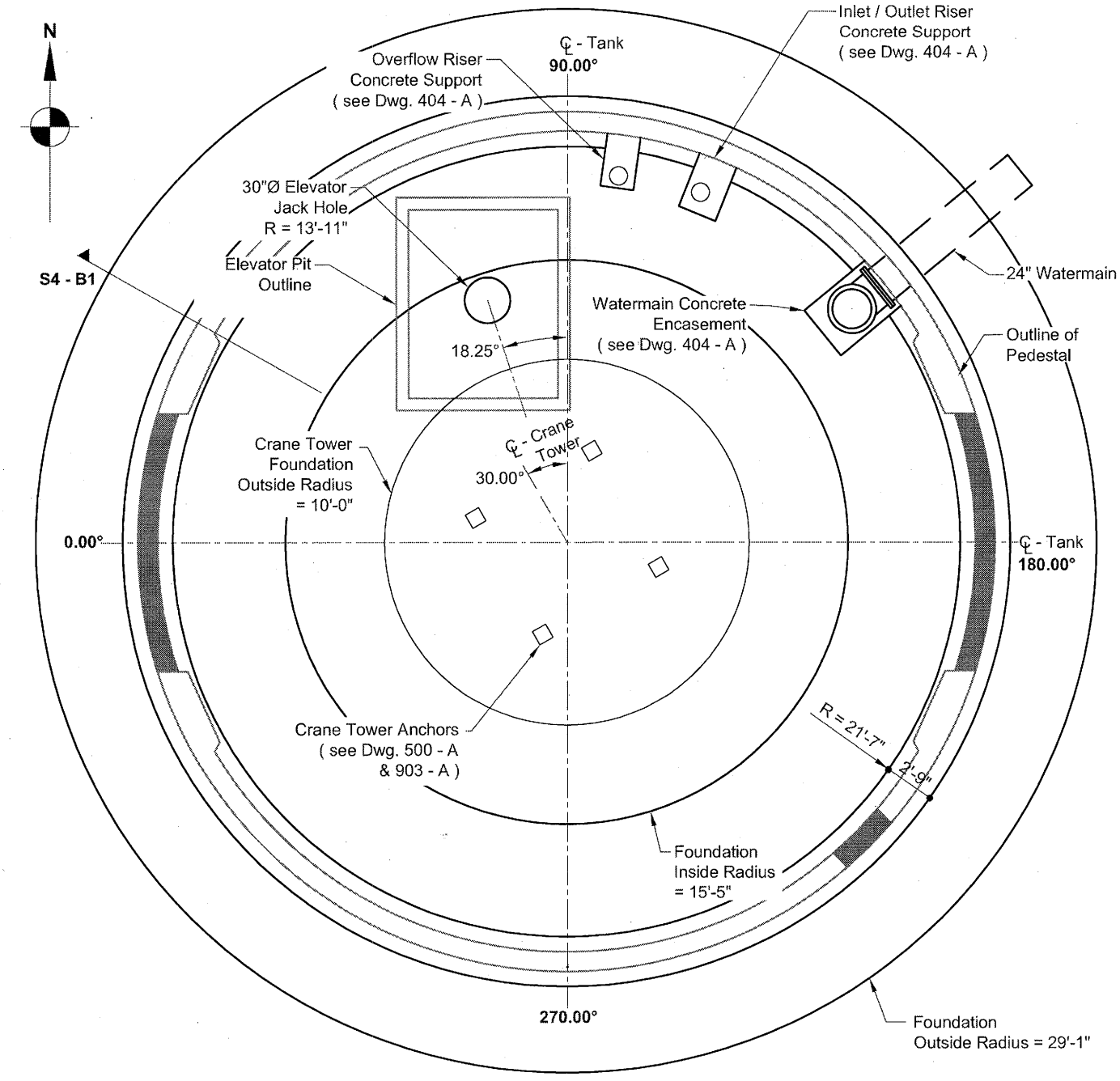

NOTES:

1. See Contract Drawings for additional details and site requirements.

Drawing References:

S4 - B1 - Foundation / Lower Wall / Grade Slab - Section / Concrete Details
S4 - B2 - Foundation / Lower Wall / Grade Slab - Reinforcing Steel
404 - A - Concrete Pipe Support - Plan / Details
903 - A - Crane Tower Foundation - Section / Concrete Details
903 - B - Crane Tower Foundation - Reinforcing Steel

STATE OF TEXAS
JOHN E. GRENDZINSKI
87324
LICENSED
PROFESSIONAL ENGINEER
07-12-07

Project:
CITY OF ROCKWALL, TEXAS
2.0 MG ELEVATED WATER STORAGE TANK

No.:	Date:	By:	Revision:

FOUNDATION PLAN

Contractor:

LANDMARK
Landmark Structures I, LP
1665 Harmon Road Fort Worth, Texas, 76177
Tel: (817) 439-8888 Fax: (817) 439-9001

Design:	Dwn:	Job Number:
JEG	DK	1190
Chk: JEG	Alloc:	Dwg. Number: S3 - A
Issued Date: 06 / 07	Scale: N.T.S.	

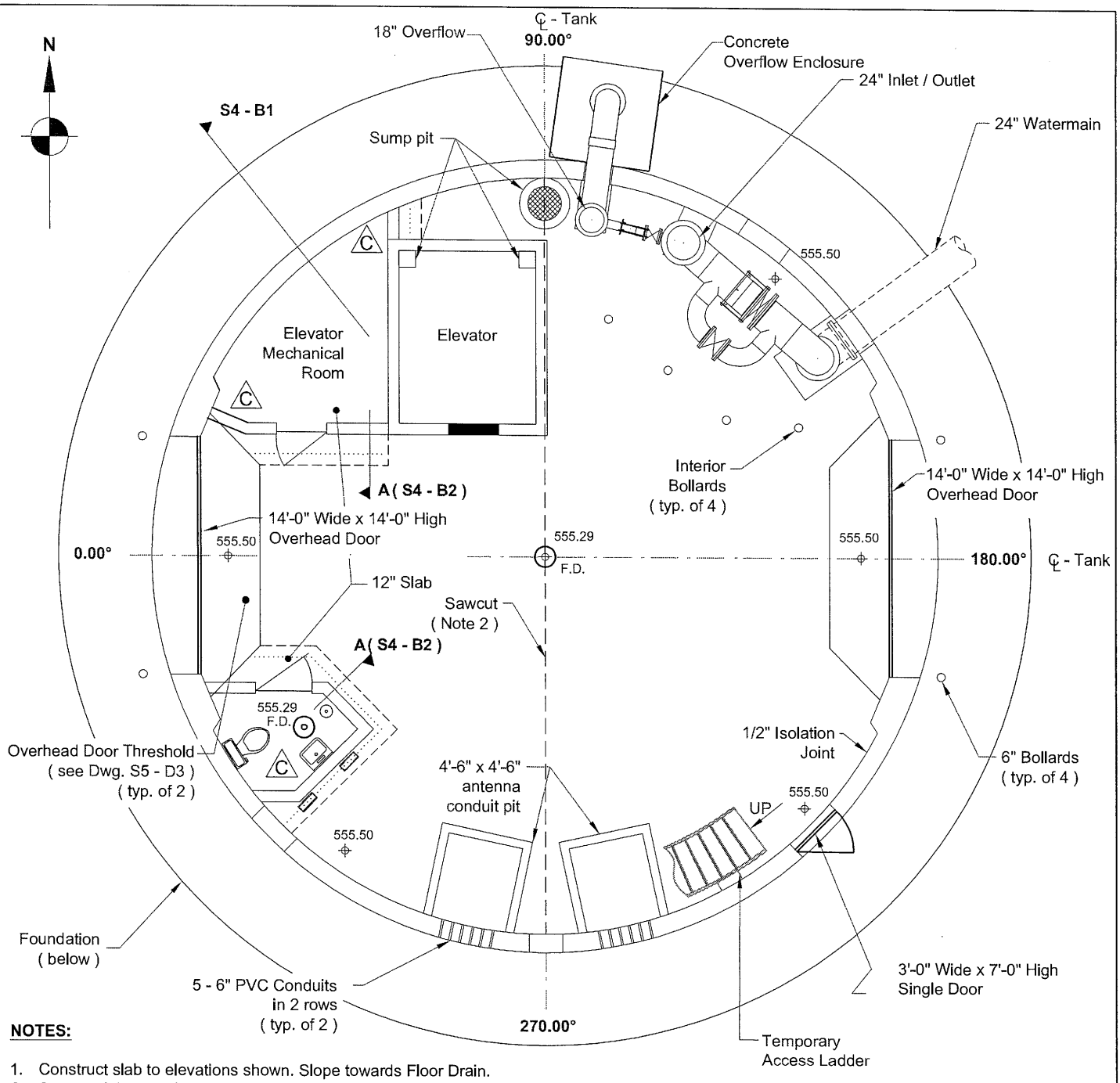

NOTES:

1. Construct slab to elevations shown. Slope towards Floor Drain.
2. Sawcut slab 1/4" wide x 1 1/2" deep on dashed line. Fill 1" with mastic compound.
3. See Contract Drawings for additional details and site requirements.

Drawing References:

S4 - B1 - Foundation / Lower Wall / Grade Slab - Section / Concrete Details
S4 - B2 - Foundation / Lower Wall / Grade Slab - Reinforcing Steel
S5 - A1 - Support Wall - Opening / Sleeve Locations
S5 - D3 - Overhead Door Threshold - Details
300 - Series - Ladder, Landing and Appurtenances
400 - Series - Mechanical

STATE OF TEXAS
JOHN E. GRENDZINSKI
87324
LICENSED
PROFESSIONAL ENGINEER
05-30-08

Project:
CITY OF ROCKWALL, TEXAS
2.0 MG ELEVATED WATER STORAGE TANK

No.:	Date:	By:	Revision:
C	13/May/08	ET	Revised as Noted
B	03/Apr/08	ET	Slab on Grade Changed
A	14/Mar/08	ET	Added Sump Pit

GRADE FLOOR PLAN

Contractor:
LANDMARK
Landmark Structures I, LP
1665 Harmon Road Fort Worth, Texas, 76177
Tel: (817) 439-8888 Fax: (817) 439-9001

Design:	Dwn:	Job Number:
JEG	VP	1190
Chk:	Alloc:	Dwg. Number:
DK		S3 - B
Issued Date:	Scale:	
06 / 07	N.T.S.	

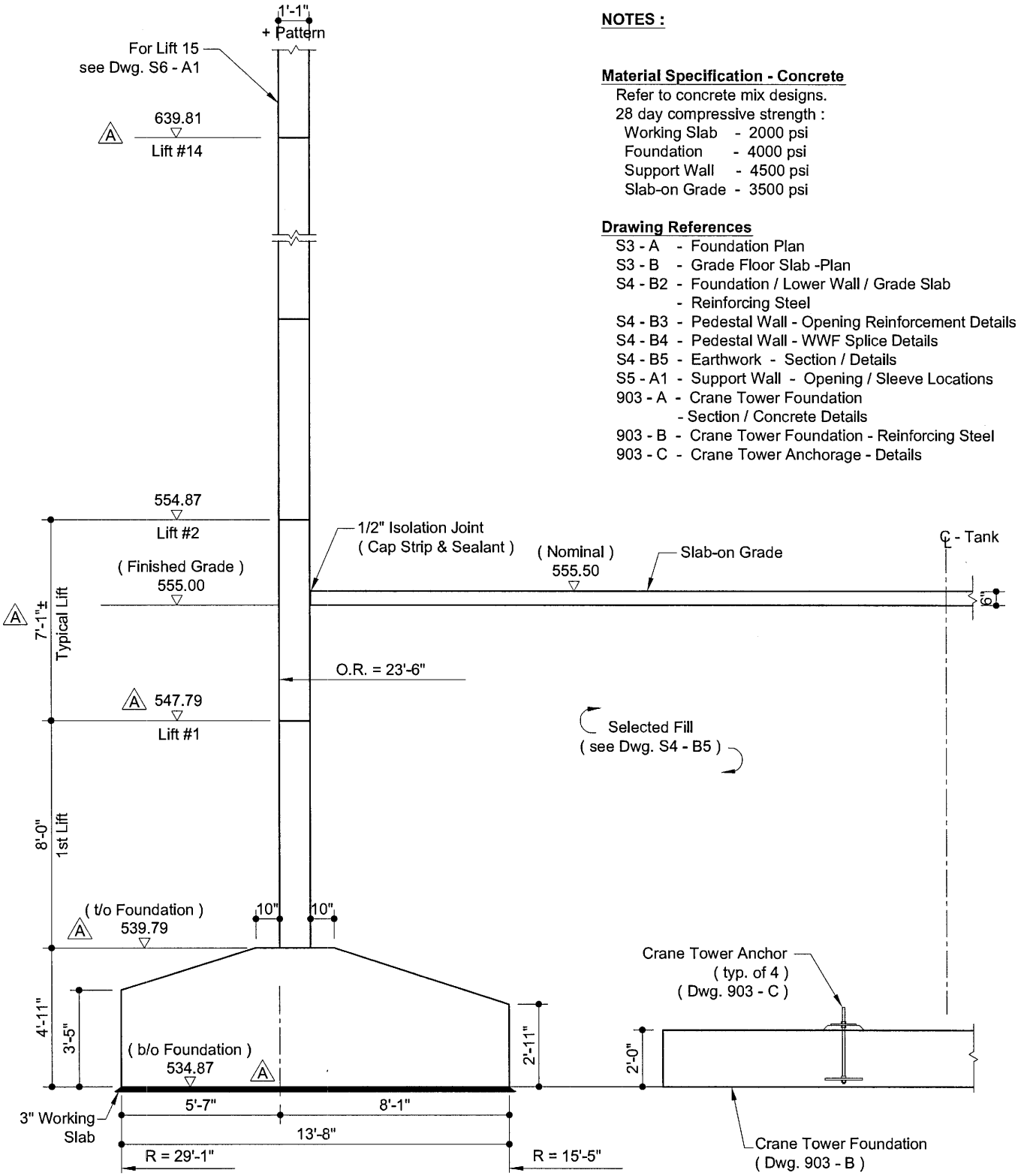

NOTES :

Material Specification - Concrete

Refer to concrete mix designs.
28 day compressive strength :

Working Slab	- 2000 psi
Foundation	- 4000 psi
Support Wall	- 4500 psi
Slab-on Grade	- 3500 psi

Drawing References

S3 - A	- Foundation Plan
S3 - B	- Grade Floor Slab -Plan
S4 - B2	- Foundation / Lower Wall / Grade Slab - Reinforcing Steel
S4 - B3	- Pedestal Wall - Opening Reinforcement Details
S4 - B4	- Pedestal Wall - WWF Splice Details
S4 - B5	- Earthwork - Section / Details
S5 - A1	- Support Wall - Opening / Sleeve Locations
903 - A	- Crane Tower Foundation - Section / Concrete Details
903 - B	- Crane Tower Foundation - Reinforcing Steel
903 - C	- Crane Tower Anchorage - Details

STATE OF TEXAS
JOHN E. GRENDZINSKI
87324
LICENSED
PROFESSIONAL ENGINEER
08-17-07

Project:
CITY OF ROCKWALL, TEXAS
2.0 MG ELEVATED WATER STORAGE TANK

No.:	Date:	By:	Revision:
A	01/Aug/07	KKC	Elevation Changes

FOUNDATION / LOWER WALL / GRADE SLAB SECTION / CONCRETE DETAILS

Contractor:
LANDMARK
Landmark Structures I, LP
1665 Harmon Road Fort Worth, Texas, 76177
Tel: (817) 439-8888 Fax: (817) 439-9001

Design: JEG	Dwn: DK	Job Number: 1190	
Chk: JEG	Alloc:	Dwg. Number: S4 - B1	
Issued Date: 06 / 07	Scale: N.T.S.		

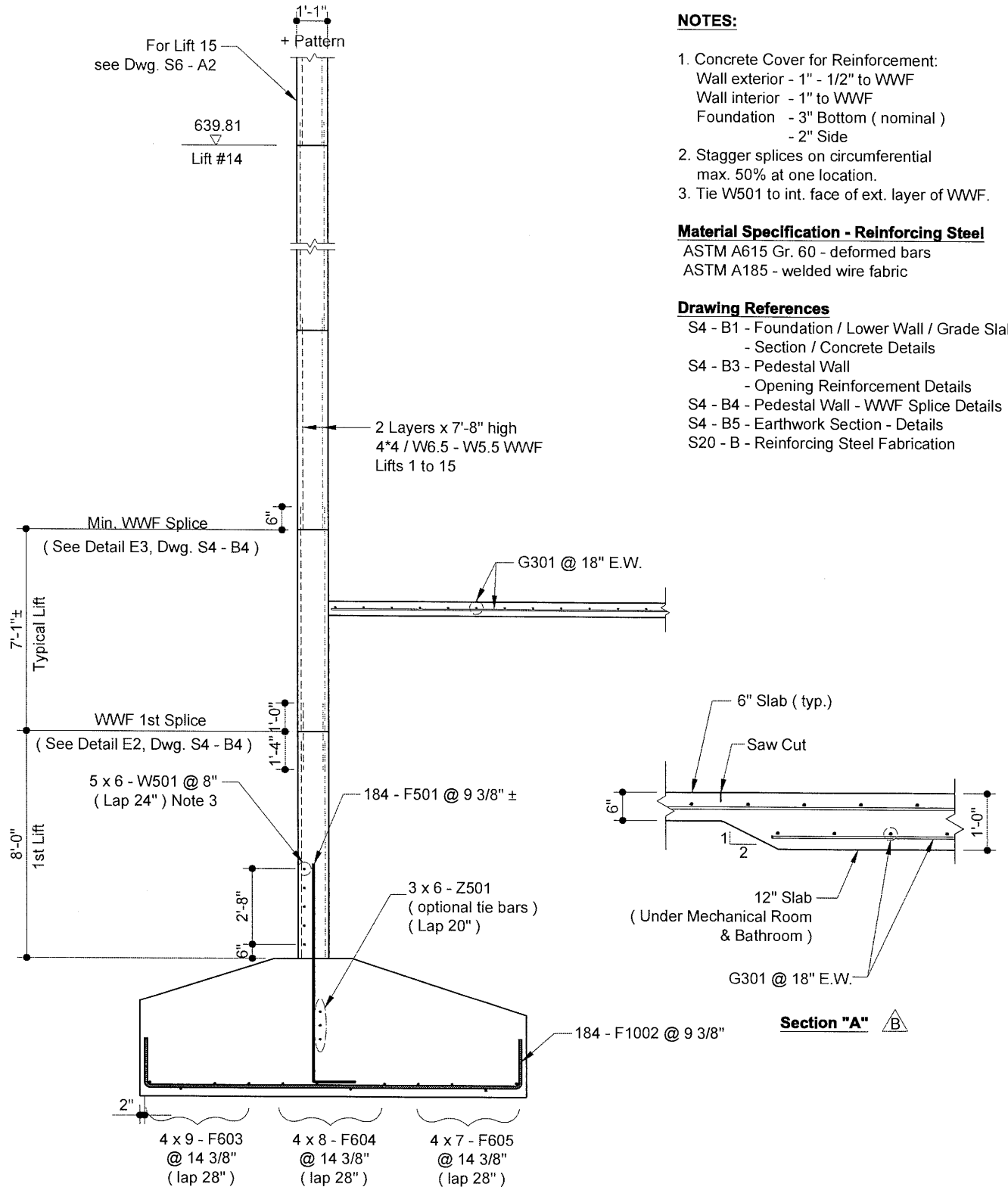

Section "A" B

NOTES:

1. Concrete Cover for Reinforcement:
   Wall exterior - 1" - 1/2" to WWF
   Wall interior - 1" to WWF
   Foundation - 3" Bottom (nominal)
   - 2" Side
2. Stagger splices on circumferential max. 50% at one location.
3. Tie W501 to int. face of ext. layer of WWF.

Material Specification - Reinforcing Steel

ASTM A615 Gr. 60 - deformed bars
ASTM A185 - welded wire fabric

Drawing References

S4 - B1 - Foundation / Lower Wall / Grade Slab - Section / Concrete Details
S4 - B3 - Pedestal Wall - Opening Reinforcement Details
S4 - B4 - Pedestal Wall - WWF Splice Details
S4 - B5 - Earthwork Section - Details
S20 - B - Reinforcing Steel Fabrication

STATE OF TEXAS
JOHN E. GRENDZINSKI
87324
LICENSED PROFESSIONAL ENGINEER
05-30-08

Project:
CITY OF ROCKWALL, TEXAS
2.0 MG ELEVATED WATER STORAGE TANK

No.	Date:	By:	Revision:
B	10/Apr/08	ET	Section "A" Added
A	01/Aug/07	KKC	Elevation Changes

FOUNDATION / LOWER WALL / GRADE SLAB REINFORCING STEEL

Contractor:

LANDMARK
Landmark Structures I, LP
1665 Harmon Road Fort Worth, Texas, 76177
Tel: (817) 439-8888 Fax: (817) 439-9001

Design:	Dwn:	Job Number:
JEG	DK	1190
Chk: JEG	Alloc:	Dwg. Number: S4 - B2
Issued Date: 06 / 07	Scale: N.T.S.	

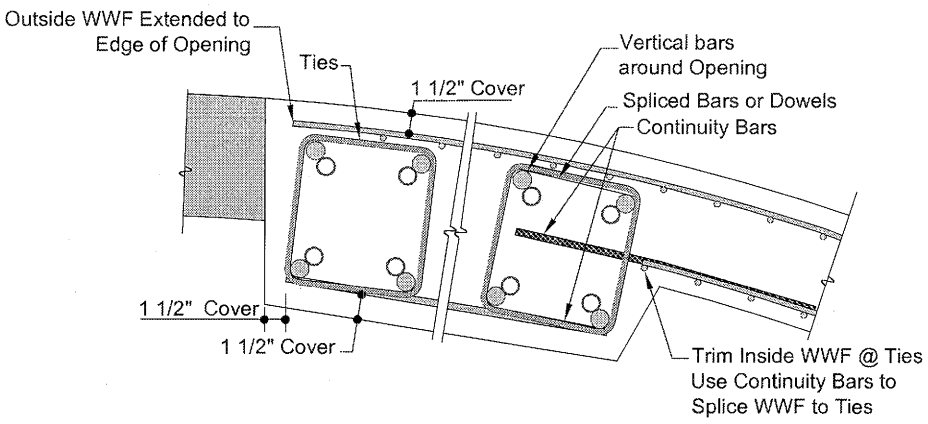

Detail B1
Concrete Pedestal Opening
Reinforcement Detail - with Mesh Outside

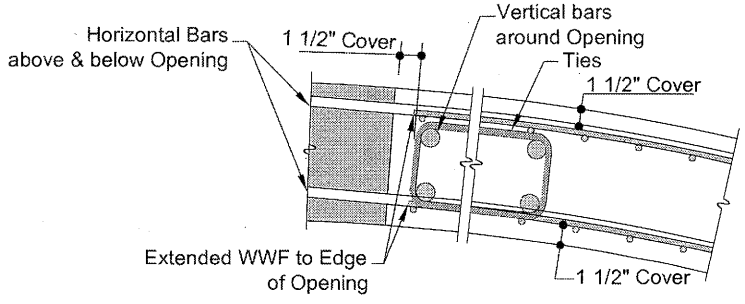

Detail D1
Concrete Pedestal Opening
Reinforcement Detail without Continuity Bars

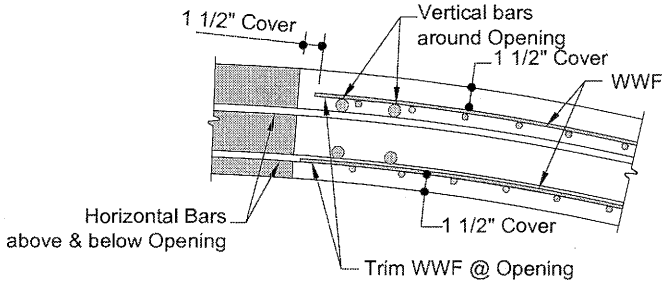

Detail D4
Concrete Pedestal Sleeve Openings
Reinforcement Detail

STATE OF TEXAS
JOHN E. GRENDZINSKI
87324
LICENSED
PROFESSIONAL ENGINEER
08-17-07

Project:
CITY OF ROCKWALL, TEXAS
2.0 MG ELEVATED WATER STORAGE TANK

No.:	Date:	By:	Revision:

PEDESTAL WALL
OPENING REINFORCEMENT DETAILS

Contractor:
LANDMARK
Landmark Structures I, LP
1665 Harmon Road Fort Worth, Texas, 76177
Tel: (817) 439-8888 Fax: (817) 439-9001

Design:	Dwn:	Job Number:
JEG	DK	1190
Chk: JEG	Alloc:	Dwg. Number: S4 - B3
Issued Date: 06 / 07	Scale: N.T.S.	

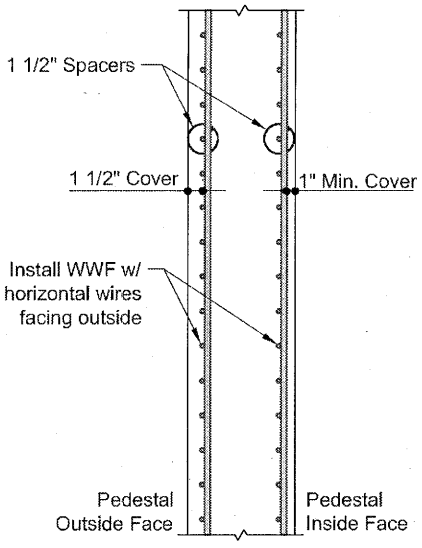

Detail E1
Concrete Pedestal
WWF Cover Detail

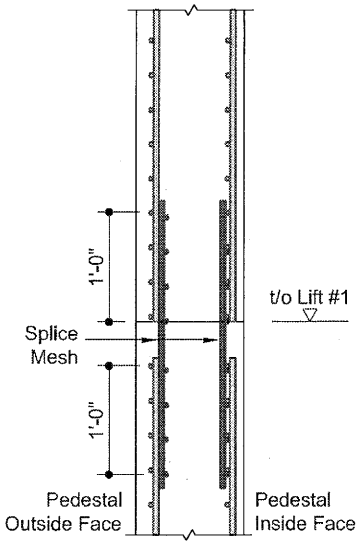

Detail E2
Concrete Pedestal
WWF Splice Detail - Lift #1 and #2

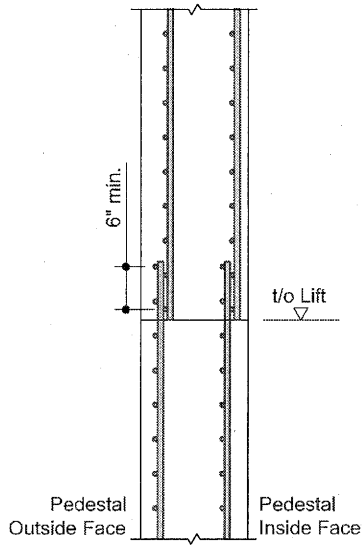

Detail E3
Concrete Pedestal
WWF Splice Detail - Typical @ remaining Lifts

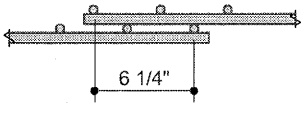

WWF Minimum Lap

Detail E4
WWF Horizontal Lap

STATE OF TEXAS
JOHN E. GRENDZINSKI
87324
LICENSED
PROFESSIONAL ENGINEER
08-17-07

Project:
CITY OF ROCKWALL, TEXAS
2.0 MG ELEVATED WATER STORAGE TANK

No.:	Date:	By:	Revision:

PEDESTAL WALL
WWF SPLICE DETAILS

Contractor:

LANDMARK
Landmark Structures I, LP
1665 Harmon Road Fort Worth, Texas, 76177
Tel: (817) 439-8888 Fax: (817) 439-9001

Design:	Dwn:	Job Number:
JEG	DK	1190
Chk: JEG	Alloc:	Dwg. Number: S4 - B4
Issued Date: 06 / 07	Scale: N.T.S.	

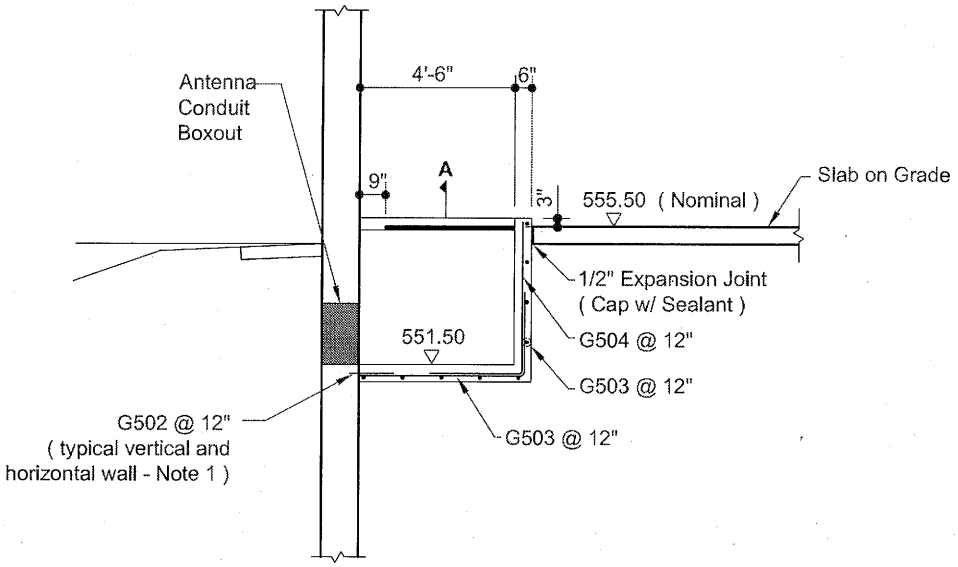

Antenna Conduit Pit
(typical 2 locations)

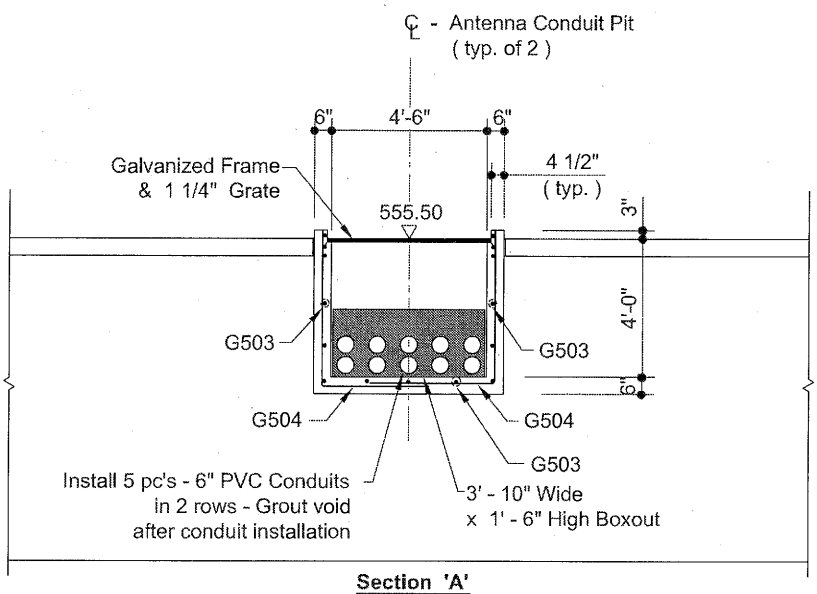

Section 'A'

NOTES :

1. Epoxy G502 anchors w/ W.R. Meadows Rezi Weld or equal. Embed rebar minimum 6" into Pedestal Wall.
2. Antenna Conduit Pit Detail - typical @ 2 locations.

Drawing References :

S3 - B - Grade Floor - Plan
S5 - G - Antenna Conduit Sleeve Boxout - Opening / Reinforcement Details
342 - A - Antenna Conduit Pit - Frame & Gate

STATE OF TEXAS
JOHN E. GRENDZINSKI
87324
LICENSED
PROFESSIONAL ENGINEER
10-18-07

Project:
CITY OF ROCKWALL, TEXAS
2.0 MG ELEVATED WATER STORAGE TANK

No.	Date:	By:	Revision:

GRADE FLOOR SLAB
ANTENNA CONDUIT PIT DETAILS

Contractor:

LANDMARK
Landmark Structures I, LP
1665 Harmon Road Fort Worth, Texas, 76177
Tel: (817) 439-8888 Fax: (817) 439-9001

Design:	Dwn:	Job Number:
JEG	DK	1190
Chk: JEG	Alloc:	Dwg. Number: S4 - B5
Issued Date: 06 / 07	Scale: N.T.S.	

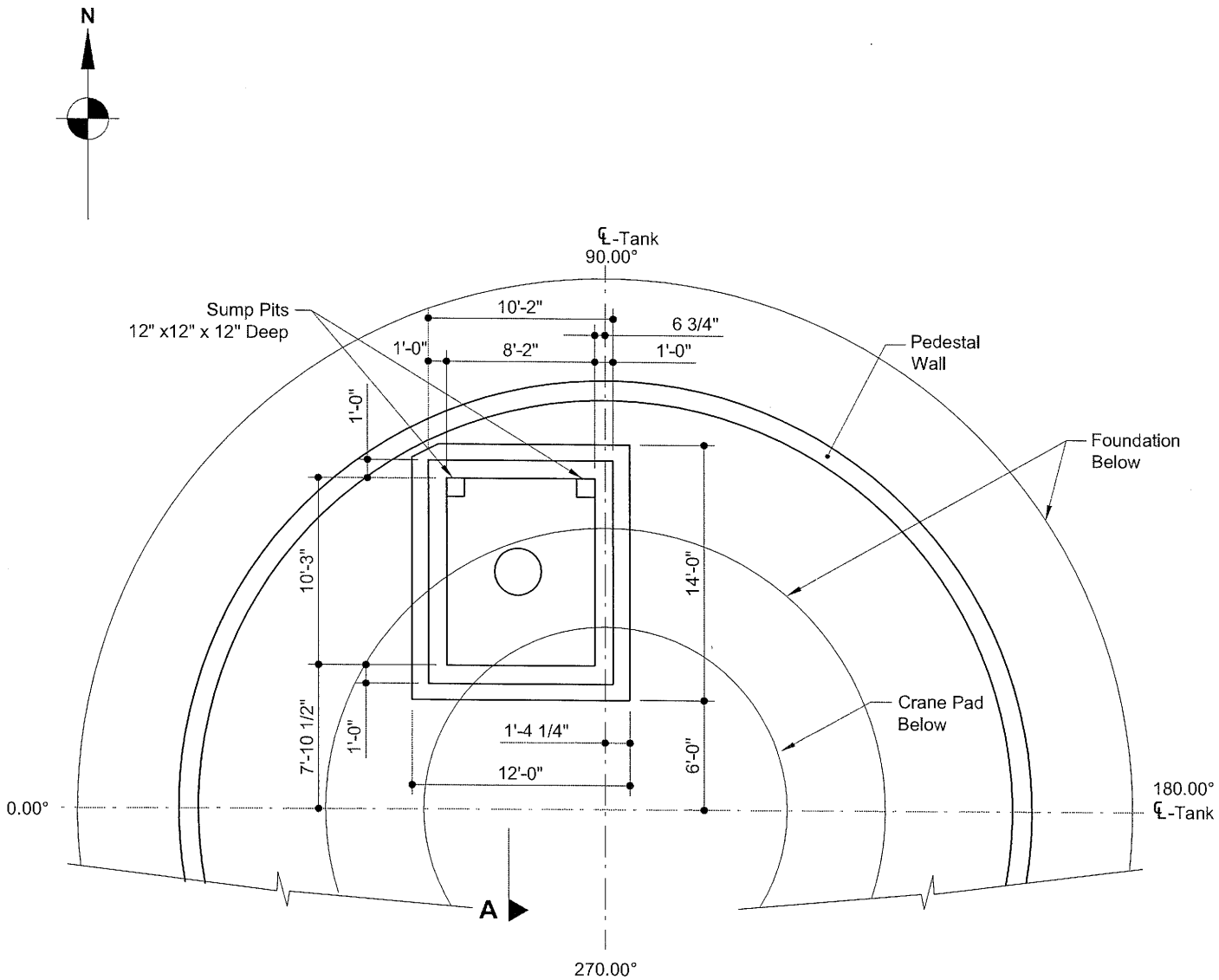

Elevator Pit Plan

NOTES :

Drawing References

S4 - B7 - Elevator Pit Elevation
S4 - B8 - Elevator Pit - Reinforcing Steel

STATE OF TEXAS
JOHN E. GRENDZINSKI
87324
LICENSED
PROFESSIONAL ENGINEER
03-26-08

Project:
CITY OF ROCKWALL, TEXAS
2.0 MG ELEVATED WATER STORAGE TANK

No.	Date:	By:	Revision:

ELEVATOR PIT PLAN

Contractor:

LANDMARK
Landmark Structures I, LP
1665 Harmon Road Fort Worth, Texas, 76177
Tel: (817) 439-8888 Fax: (817) 439-9001

Design:	Dwn:	Job Number:
JEG	ET	1190
Chk: DK	Alloc:	Dwg. Number: S4 - B6
Issued Date: 06 / 07	Scale: N.T.S.	

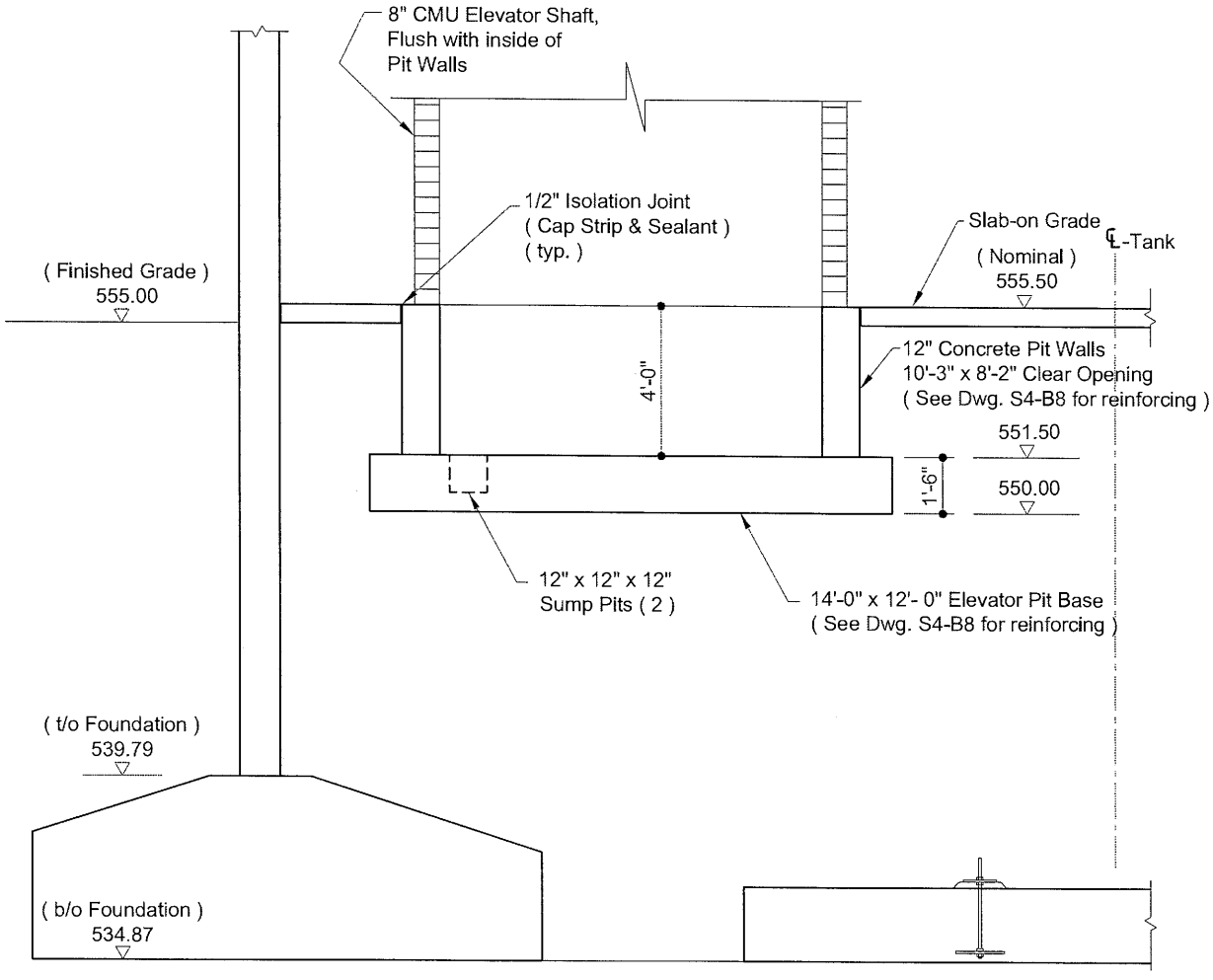

NOTES:

1. Concrete Cover for Reinforcement:
   pit base bottom - 3"
   all other surfaces - 2"

Material Specification:

Concrete - Refer to concrete material mix designs.
28 day compressive strength 4000 psi
Reinforcing Steel - ASTM A615 Gr. 60 - deformed bars

Drawing References

S4 - B6 - Elevator Pit Plan
S4 - B8 - Elevator Pit - Reinforcing Steel

STATE OF TEXAS
JOHN E. GRENDZINSKI
87324
LICENSED
PROFESSIONAL ENGINEER
03-26-08

Project:
CITY OF ROCKWALL, TEXAS
2.0 MG ELEVATED WATER STORAGE TANK

No.:	Date:	By:	Revision:

ELEVATOR PIT ELEVATION

Contractor:

LANDMARK
Landmark Structures I, LP
1665 Harmon Road Fort Worth, Texas, 76177
Tel: (817) 439-8888 Fax: (817) 439-9001

Design:	Dwn:	Job Number:
JEG	ET	1190
Chk:	Alloc:	
DK		Dwg. Number:
Issued Date:	Scale:	S4 - B7
06 / 07	N.T.S.	

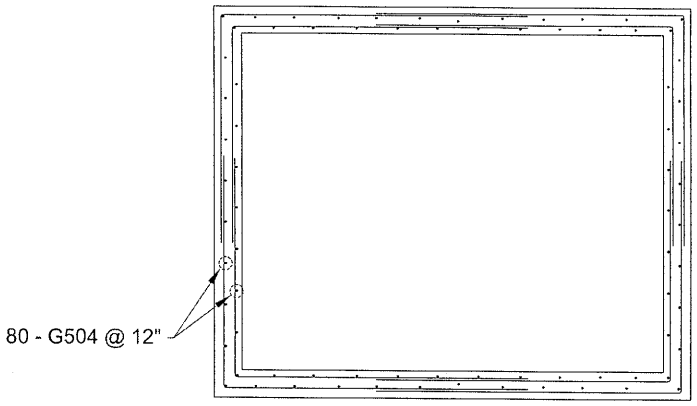

Elevator Pit Walls Plan

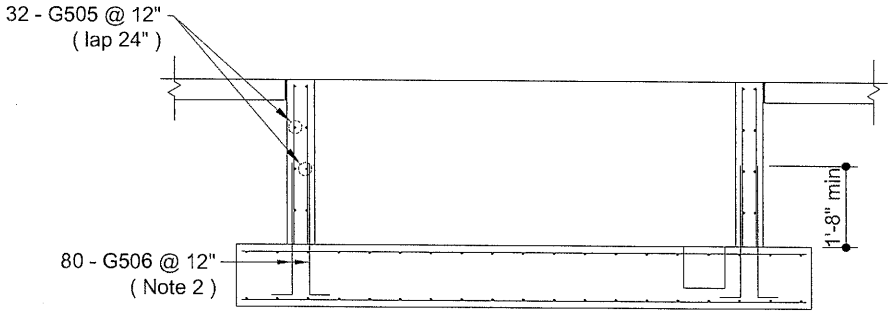

Elevator Pit Elevation

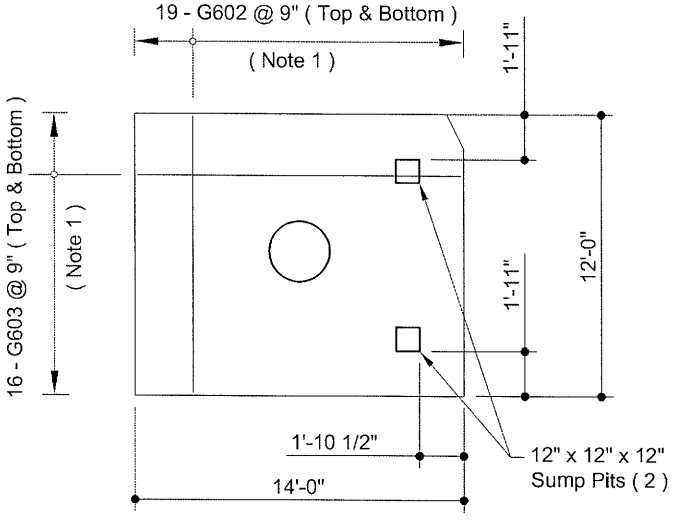

Elevator Pit Base Plan

NOTES :

1. Trim G602'S & G603'S @ Jack Opening & Sump Pit openings.
2. Either cast-in G506 dowels with pit base or post install into pit base with W.R. meadows Rezi Weld or equal (embed minimum 9" into base).

STATE OF TEXAS
JOHN E. GRENDZINSKI
87324
LICENSED
PROFESSIONAL ENGINEER
03-26-08

Project:
CITY OF ROCKWALL, TEXAS
2.0 MG ELEVATED WATER STORAGE TANK

No.:	Date:	By:	Revision:

ELEVATOR PIT REINFORCING STEEL

Contractor:
LANDMARK
Landmark Structures I, LP
1665 Harmon Road Fort Worth, Texas, 76177
Tel: (817) 439-8888 Fax: (817) 439-9001

Design:	Dwn:	Job Number:
JEG	ET	1190
Chk:	Alloc:	Dwg. Number:
DK		S4 - B8
Issued Date:	Scale:	
06 / 07	N.T.S.	

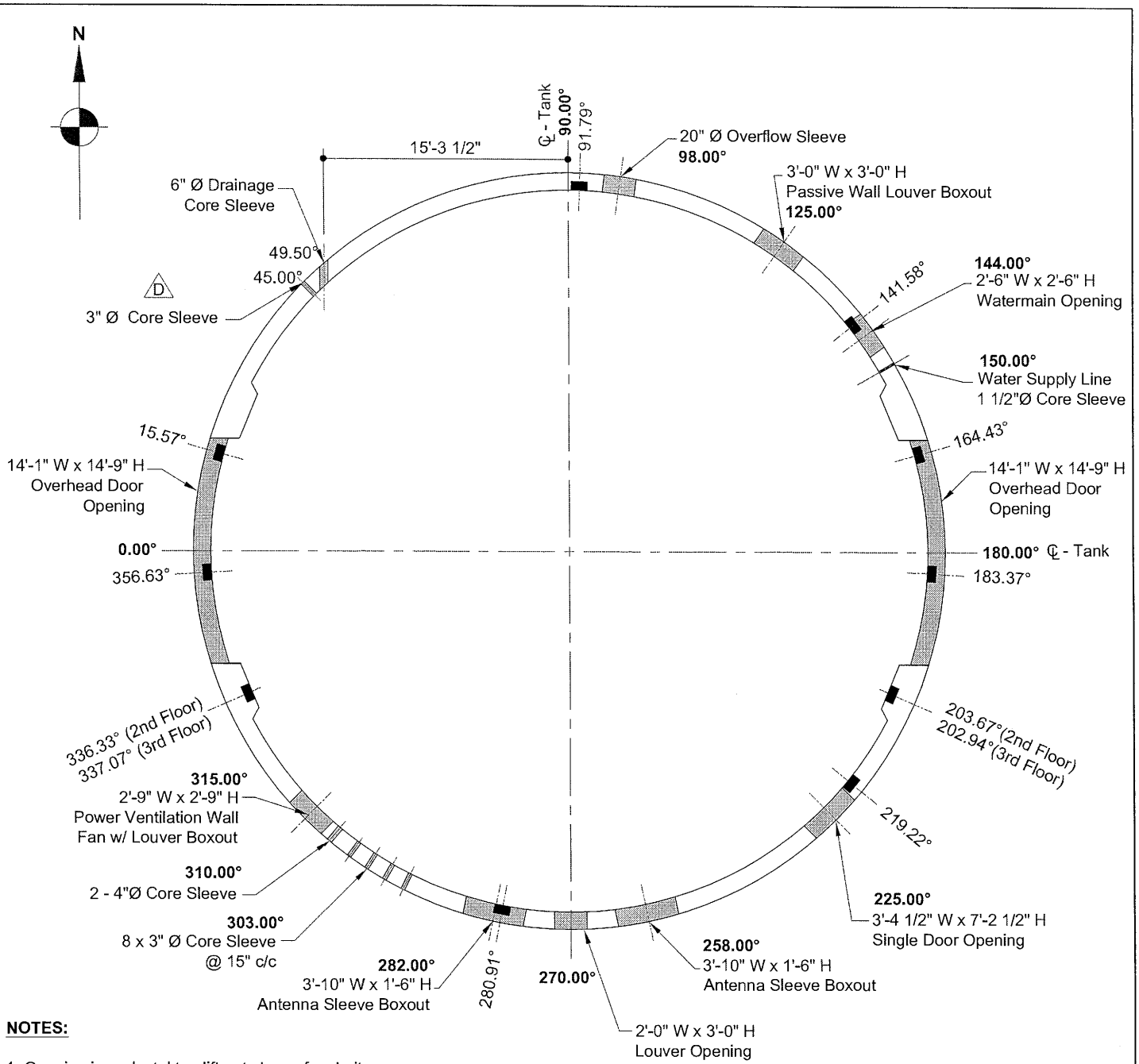

NOTES:

1. Opening in pedestal top lift not shown for clarity.

Drawings References

S5 - A2 - Lower Pedestal Openings - Elevations
S5 - B - Single Door - Opening / Reinforcement Details
S5 - D1 - Overhead Door - Opening / Reinforcement Details
S5 - E - Overflow Sleeve - Opening / Reinforcement Details
S5 - G - Antenna Sleeve Boxout - Opening / Reinforcement Details
S5 - H - Power Ventilation Wall Fan w/ Louver - Opening / Reinforcement Details
S5 - J - Passive Wall Louvre - Opening / Reinforcement Details
S5 - K - Louver Boxout - Opening / Reinforcement Details
S5 - L1/L2 - Intermediate Floor - Beam Seat Insert

STATE OF TEXAS
JOHN E. GRENDZINSKI
87324
LICENSED PROFESSIONAL ENGINEER
05-30-08

Project:
CITY OF ROCKWALL, TEXAS
2.0 MG ELEVATED WATER STORAGE TANK

No.	Date:	By:	Revision:
D	05/May/08	ET	3" Core Sleeve Added
C	26/Mar/08	ET	Added Core Sleeves
B	06/Sep/07	RAG	Beam Seats chg'd / added
A	29/Aug/07	DK	Antenna Sleeve Boxouts & Beam Seats

SUPPORT WALL OPENINGS / SLEEVE LOCATIONS

Contractor:

LANDMARK
Landmark Structures I, LP
1665 Harmon Road Fort Worth, Texas, 76177
Tel: (817) 439-8888 Fax: (817) 439-9001

Design:	Dwn:	Job Number:
JEG	KKC	1190
Chk:	Alloc:	Dwg. Number:
DK		S5 - A1
Issued Date:	Scale:	
06 / 07	N.T.S.	

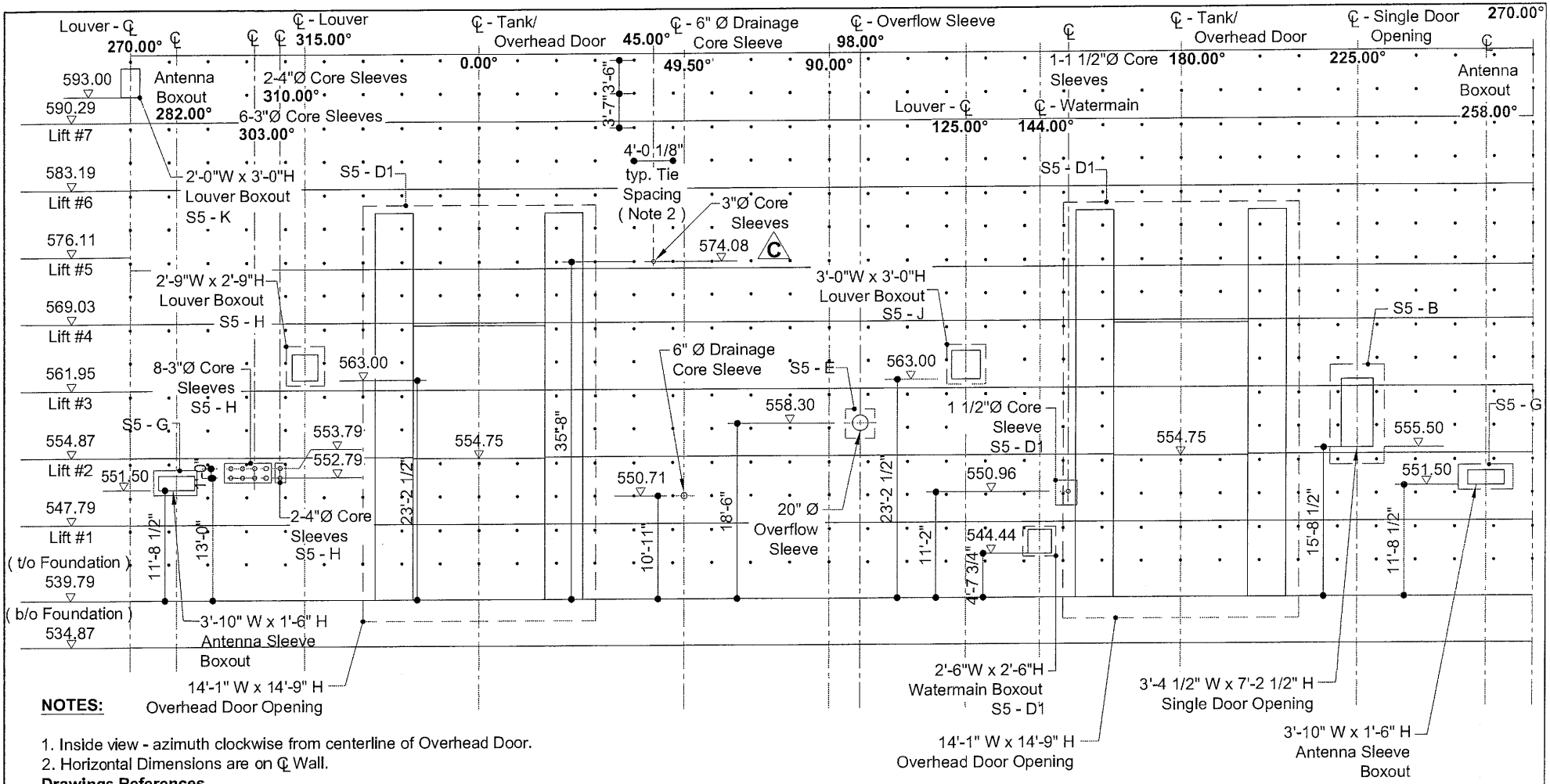

NOTES:

1. Inside view - azimuth clockwise from centerline of Overhead Door.
2. Horizontal Dimensions are on ℄ Wall.

Drawings References

S5 - B - Single Door - Opening / Reinforcement Details
S5 - D1 - Overhead Door - Opening / Reinforcement Details
S5 - E - Overflow Sleeve - Opening / Reinforcement Details
S5 - G - Antenna Sleeve Boxout - Opening / Reinforcement Details
S5 - H - Power Ventilation Wall Fan w / Louver - Opening / Reinforcement Details
S5 - J - Passive Wall Louver - Opening / Reinforcement Details
S5 - K - Louver Boxout - Opening / Reinforcement Details

STATE OF TEXAS
JOHN E. GRENDZINSKI
87324
LICENSED
PROFESSIONAL ENGINEER
05-30-08

Project:
CITY OF ROCKWALL, TEXAS
2.0 MG ELEVATED WATER STORAGE TANK

No.	Date:	By:	Revision:
C	25/Apr/08	ET	3"Ø Core Sleeve Added For Mechanical room
B	26/Mar/08	ET	Added Core Sleeves
A	29/Aug/07	DK	Antenna Sleeve Boxouts & Beam Seats

LOWER PEDESTAL OPENINGS ELEVATION

Contractor:

LANDMARK
Landmark Structures I, LP
1665 Harmon Road Fort Worth, Texas, 76177
Tel: (817) 439-8888 Fax: (817) 439-9001

Design:	Dwn:	Job Number:
JEG	KKC	1190
Chk:	Alloc:	Dwg. Number:
DK		S5 - A2
Issued Date:	Scale:	
06 / 07	N.T.S.	

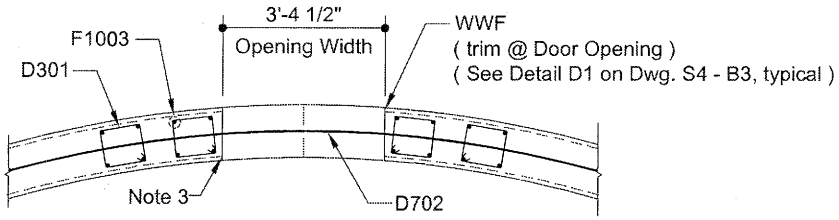

Section

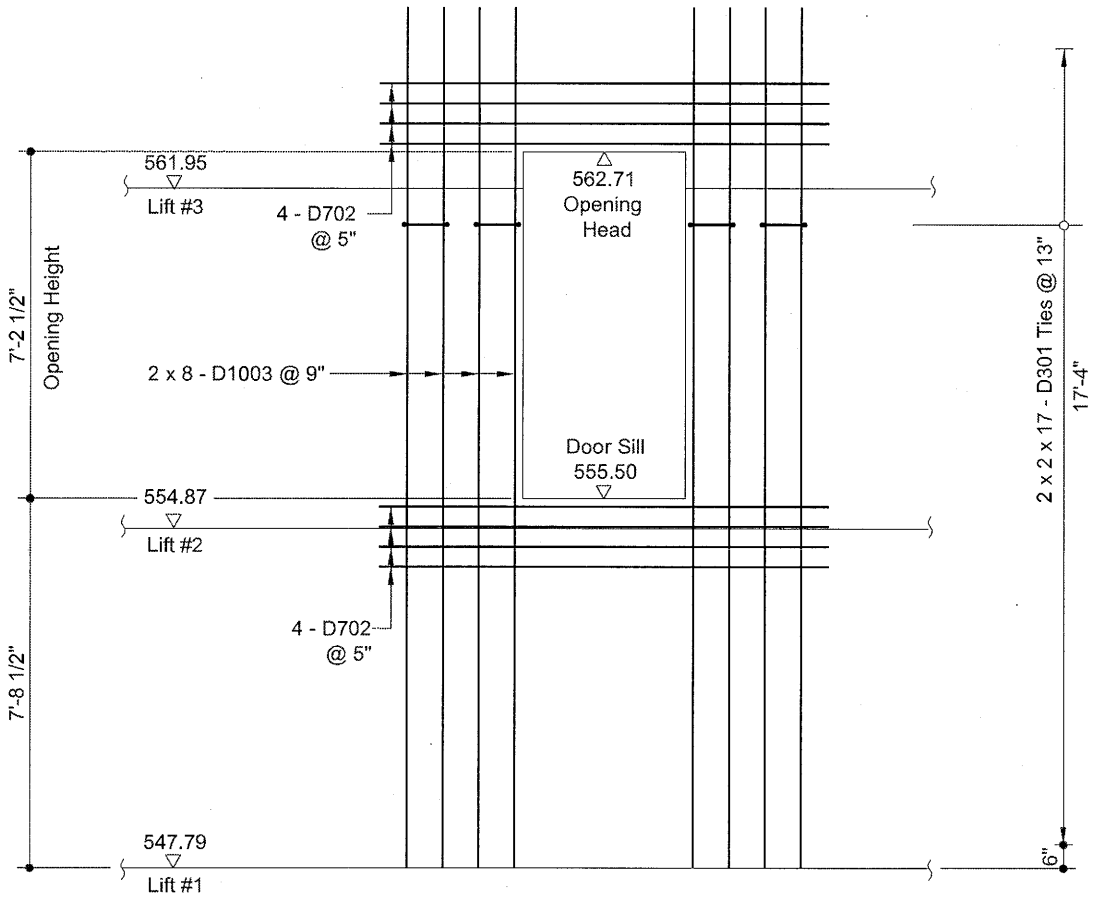

NOTES:

1. Door size: 3'-0" wide x 7'-0" high
2. Refer to Dwg. S4 - B2 for concrete cover, material specifications and drawing references.
3. Provide 3/4" chamfer on all edges of opening. Exception - omit at interior bottom edge.

STATE OF TEXAS
JOHN E. GRENDZINSKI
87324
LICENSED
PROFESSIONAL ENGINEER
08-17-07

Project:
CITY OF ROCKWALL, TEXAS
2.0 MG ELEVATED WATER STORAGE TANK

No.:	Date:	By:	Revision:

SINGLE DOOR OPENING / REINFORCEMENT DETAILS

Contractor:
LANDMARK
Landmark Structures I, LP
1665 Harmon Road Fort Worth, Texas, 76177
Tel: (817) 439-8888 Fax: (817) 439-9001

Design:	Dwn:	Job Number:
JEG	KKC	1190
Chk: DK	Alloc:	Dwg. Number: S5 - B
Issued Date: 06 / 07	Scale: N.T.S.	

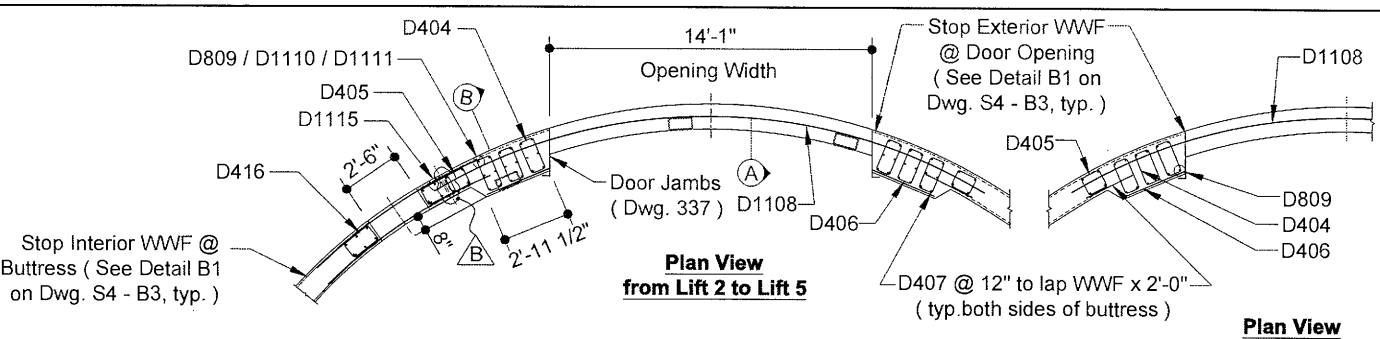

Plan View
from Lift 2 to Lift 5

Plan View
Lift 1

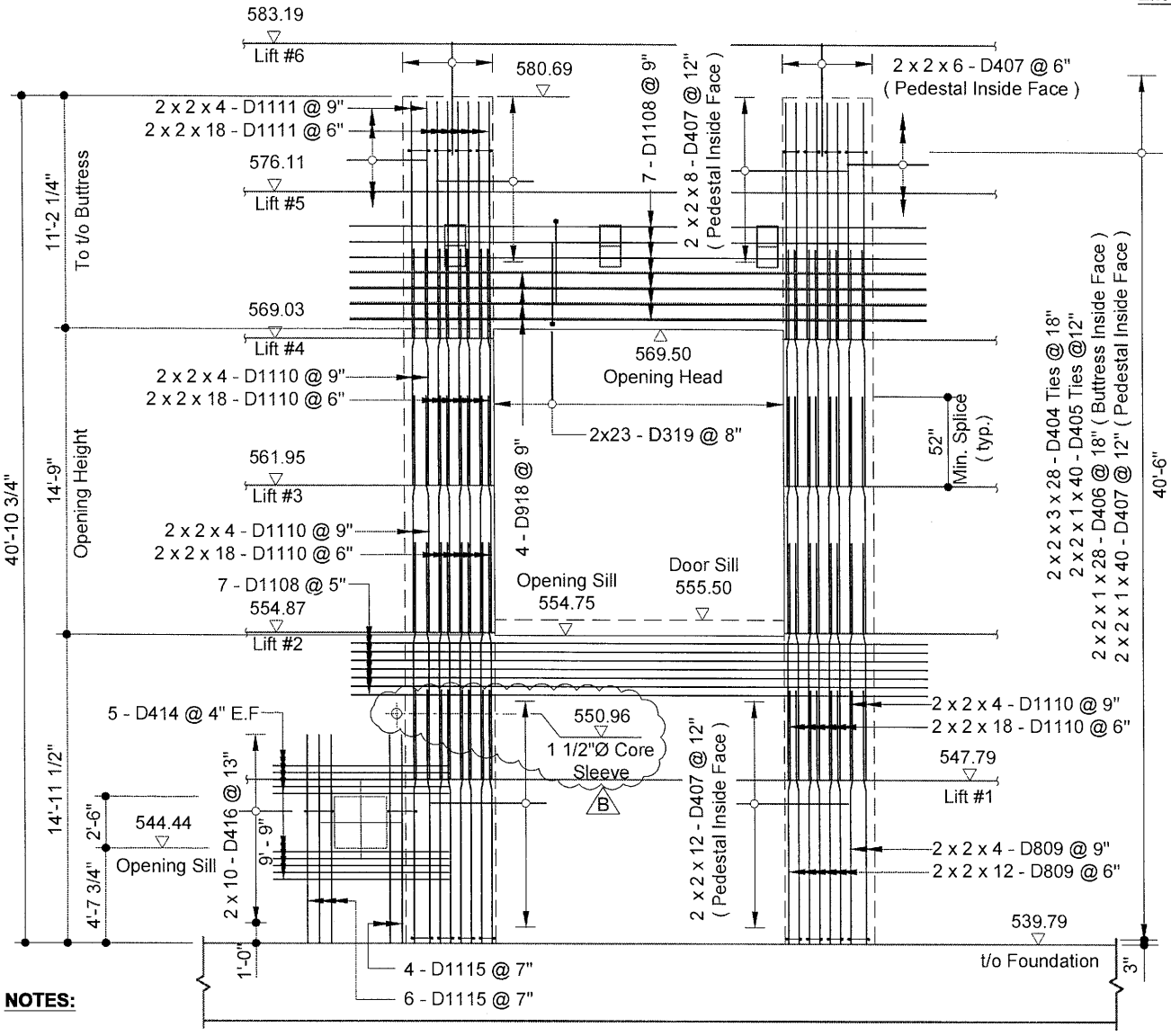

NOTES:

1. Door size: 14'-0" wide x 14'-0" high
2. Refer to Dwg. S5 - D2 for section details.
3. Refer to Dwg. S5 - D3 for overhead door threshold details, and Dwg. S5-D4 & D5 for beam seat details.
4. Refer to Dwg. S4 - B2 for concrete cover, material specifications and drawing references.
5. Provide 3/4" chamfer on all edges of opening.

STATE OF TEXAS
JOHN E. GRENDZINSKI
87324
LICENSED PROFESSIONAL ENGINEER
05-30-08

Project:
CITY OF ROCKWALL, TEXAS
2.0 MG ELEVATED WATER STORAGE TANK

No.	Date:	By:	Revision:
B	26/Mar/08	ET	Added Core Sleeve
A	06 Sept 07	RAG	Added beam seats and reinforcement

OVERHEAD DOOR OPENING / REINFORCEMENT DETAILS

Contractor:

LANDMARK
Landmark Structures I, LP
1665 Harmon Road Fort Worth, Texas, 76177
Tel: (817) 439-8888 Fax: (817) 439-9001

Design:	Dwn:	Job Number:
JEG	KKC	1190
Chk:	Alloc:	Dwg. Number:
DK		S5 - D1
Issued Date:	Scale:	
09 / 07	N.T.S.	

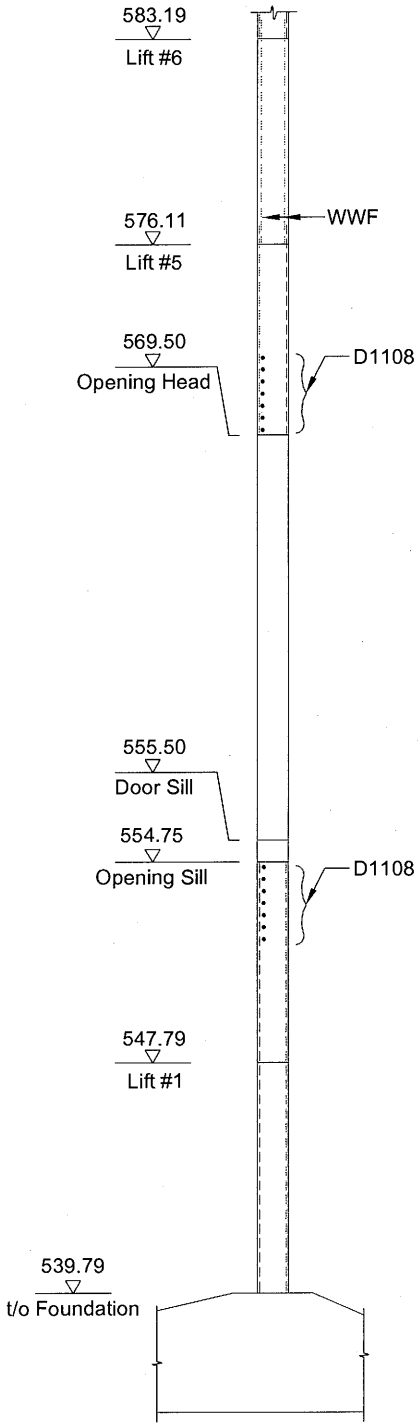

Section 'A'

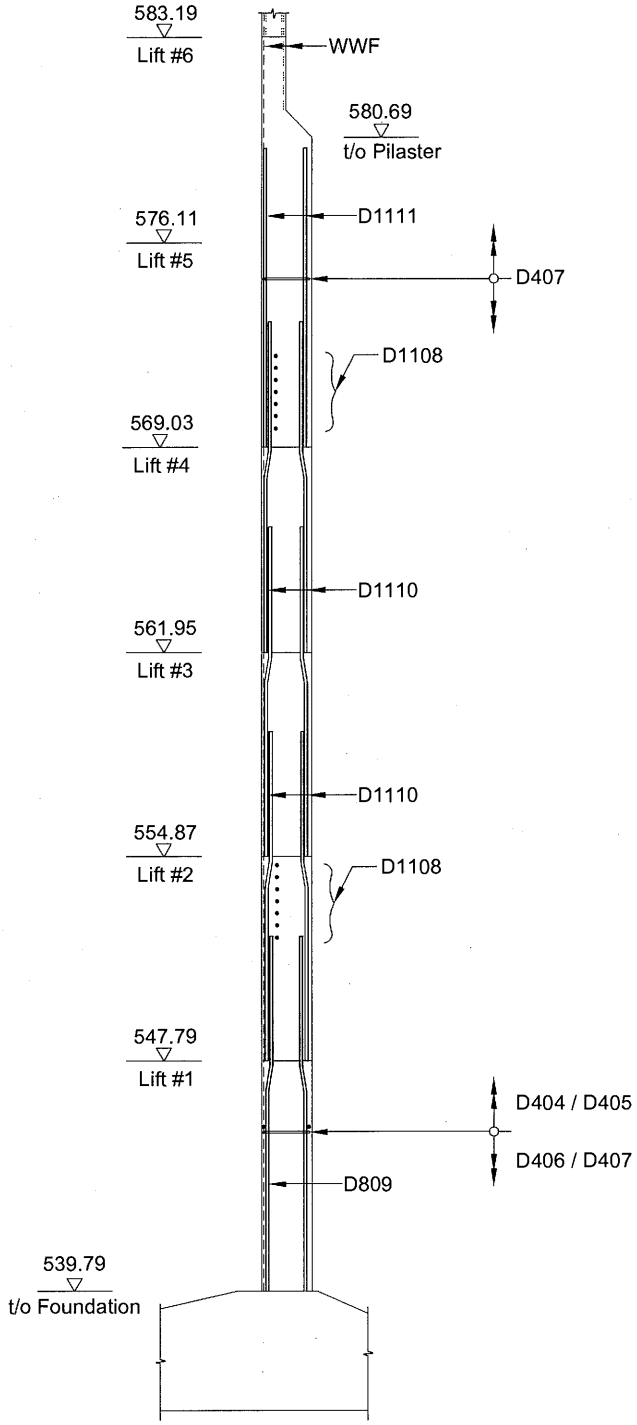

Section 'B'

NOTES:

1. Refer to Dwg. S5 - D1 for section locations.
2. Refer to Dwg. S4 - B2 for concrete cover, material specifications and drawing references.

STATE OF TEXAS
JOHN E. GRENDZINSKI
87324
LICENSED PROFESSIONAL ENGINEER
10-17-07

Project:
CITY OF ROCKWALL, TEXAS
2.0 MG ELEVATED WATER STORAGE TANK

No.:	Date:	By:	Revision:

OVERHEAD DOOR OPENING / SECTIONS

Contractor:

LANDMARK
Landmark Structures I, LP
1665 Harmon Road Fort Worth, Texas, 76177
Tel: (817) 439-8888 Fax: (817) 439-9001

Design:	Dwn:	Job Number:
JEG	KKC	1190
Chk: DK	Alloc:	Dwg. Number: S5 - D2
Issued Date: 06 / 07	Scale: N.T.S.	

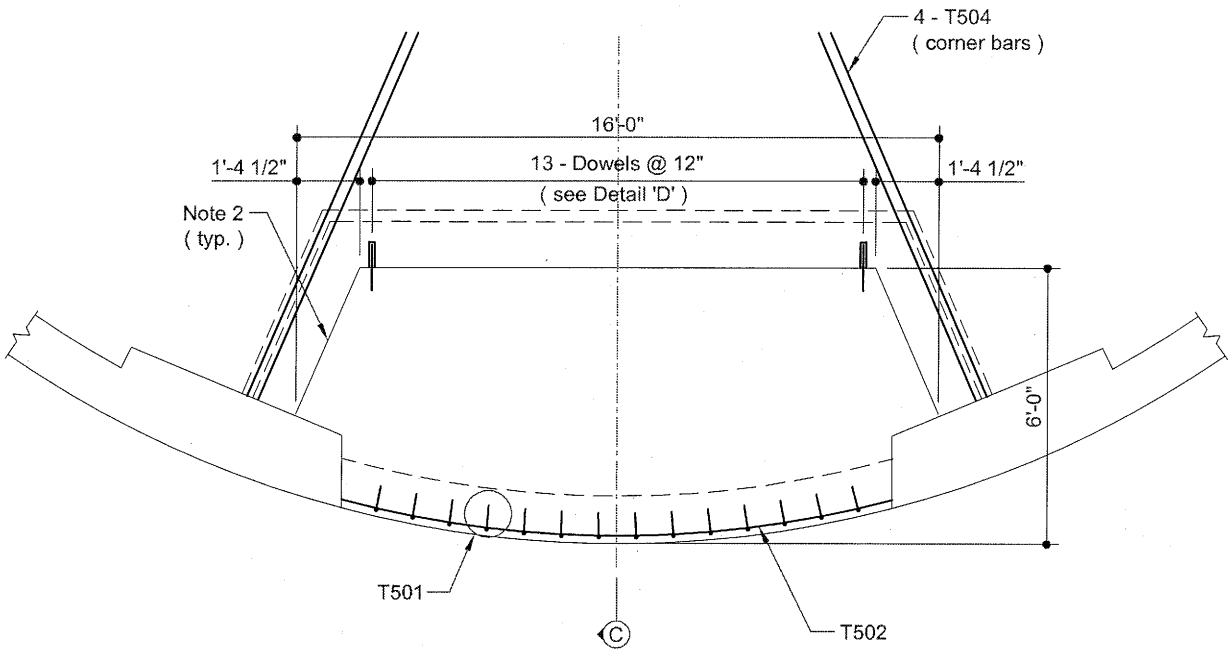

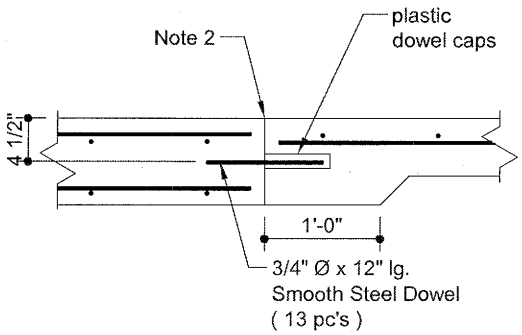

Detail 'D'

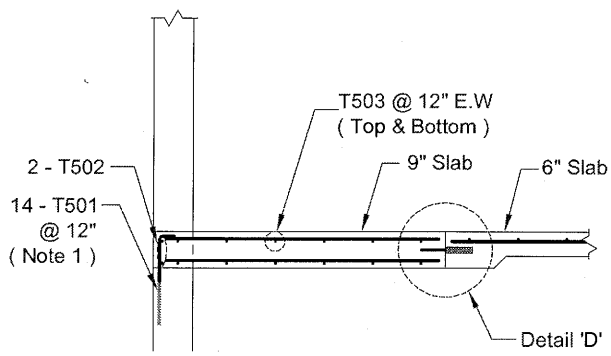

Section 'C'

NOTES :

1. Epoxy T501 anchors w/ W.R. Meadows Rezi Weld or equal. Embed rebar minimum 9".
2. 1/2" expansion joint cap strip with self leveling sealant.
3. Refer to Dwg. S4 - B2 for concrete cover, material specifications and drawing references.

Drawing References

S5 - D1 - Overhead Door - Opening / Reinforcement Details
S5 - D2 - Overhead Door - Opening / Sections

STATE OF TEXAS
JOHN E. GRENDZINSKI
87324
LICENSED PROFESSIONAL ENGINEER
10-17-07

Project:
CITY OF ROCKWALL, TEXAS
2.0 MG ELEVATED WATER STORAGE TANK

No.:	Date:	By:	Revision:

OVERHEAD DOOR THRESHOLD DETAILS

Contractor:

LANDMARK
Landmark Structures I, LP
1665 Harmon Road Fort Worth, Texas, 76177
Tel: (817) 439-8888 Fax: (817) 439-9001

Design:	Dwn:	Job Number:
JEG	KKC	1190
Chk: DK	Alloc:	Dwg. Number: S5 - D3
Issued Date: 06 / 07	Scale: N.T.S.	

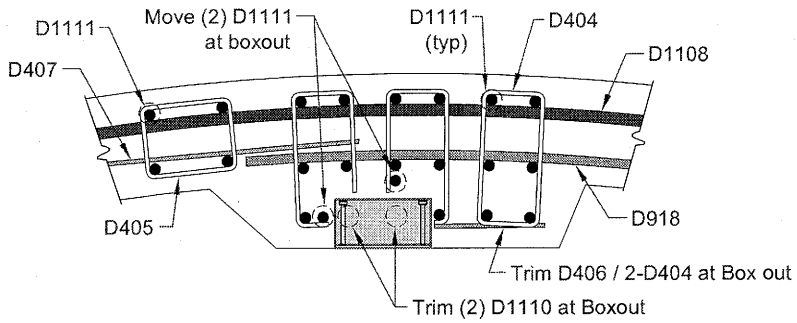

Section A

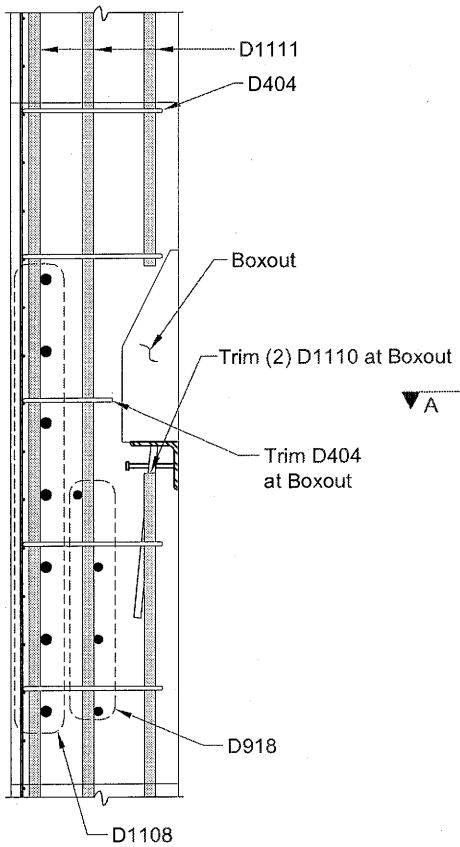

Section B

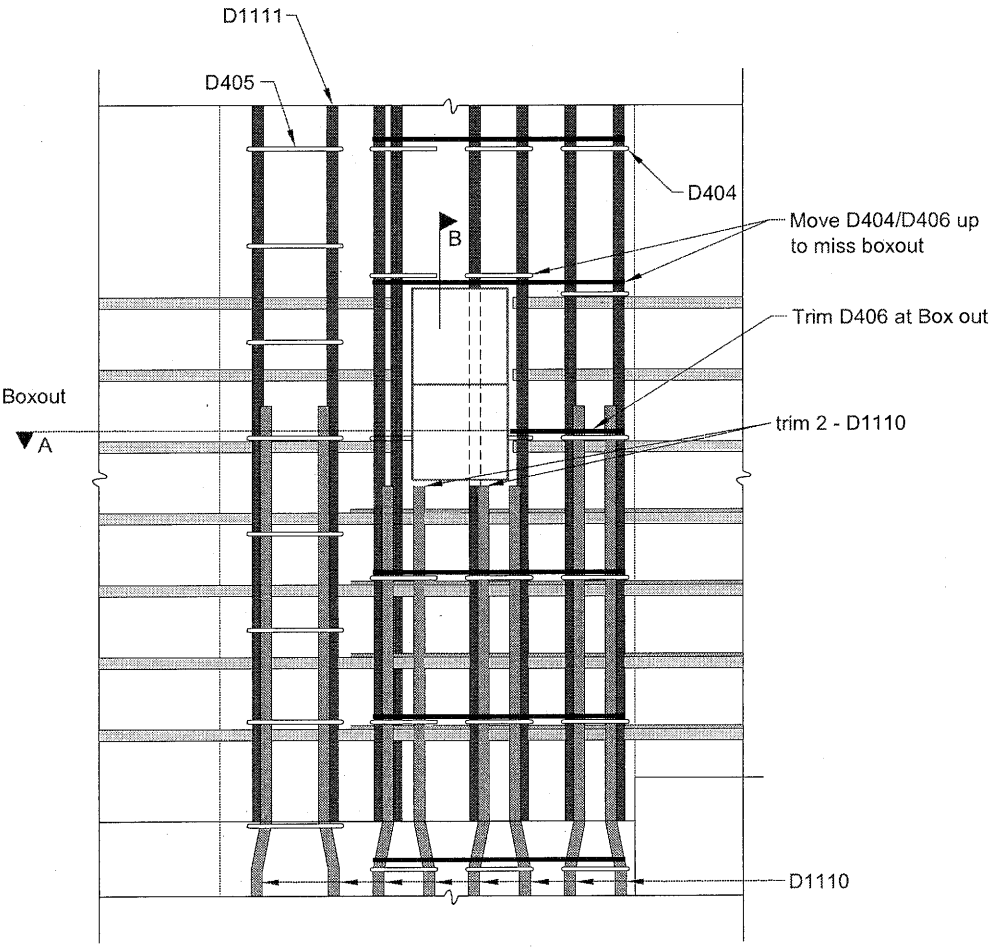

NOTES:

1. Door size: 14'-0" wide x 14'-0" high
2. Refer to Dwg. S5 - D2 for section details.
3. Refer to Dwg. S5 - D3 for overhead door threshold details.
4. Refer to Dwg. S4 - B2 for concrete cover, material specifications and drawing references.
5. Provide 3/4" chamfer on all edges of opening.
6. Detail typical 2 locations: AZM. 336.33° (shown) & AZM. 203.67° (opposite hand).

STATE OF TEXAS
JOHN E. GRENDZINSKI
87324
LICENSED
PROFESSIONAL ENGINEER
09-07-07

Project:
CITY OF ROCKWALL, TEXAS
2.0 MG ELEVATED WATER STORAGE TANK

No.:	Date:	By:	Revision:

BEAM SEAT INSERT PILASTER SECTION

Contractor:
LANDMARK
Landmark Structures I, LP
1665 Harmon Road Fort Worth, Texas, 76177
Tel: (817) 439-8888 Fax: (817) 439-9001

Design:	Dwn:	Job Number:
JEG	RAG	1190
Chk:	Alloc:	Dwg. Number:
Issued Date: 09 / 07	Scale: N.T.S.	S5 - D4

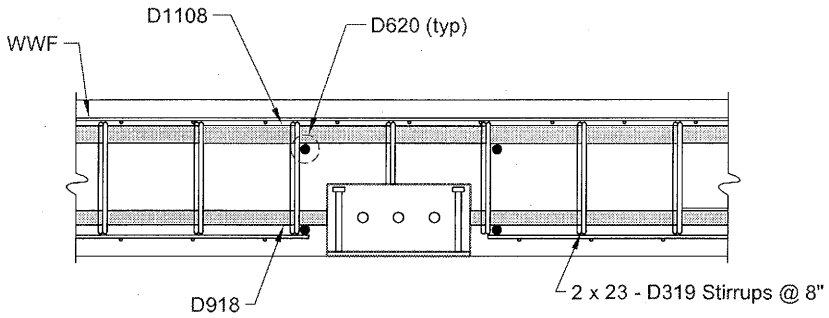

Section A
(seat above truck door)

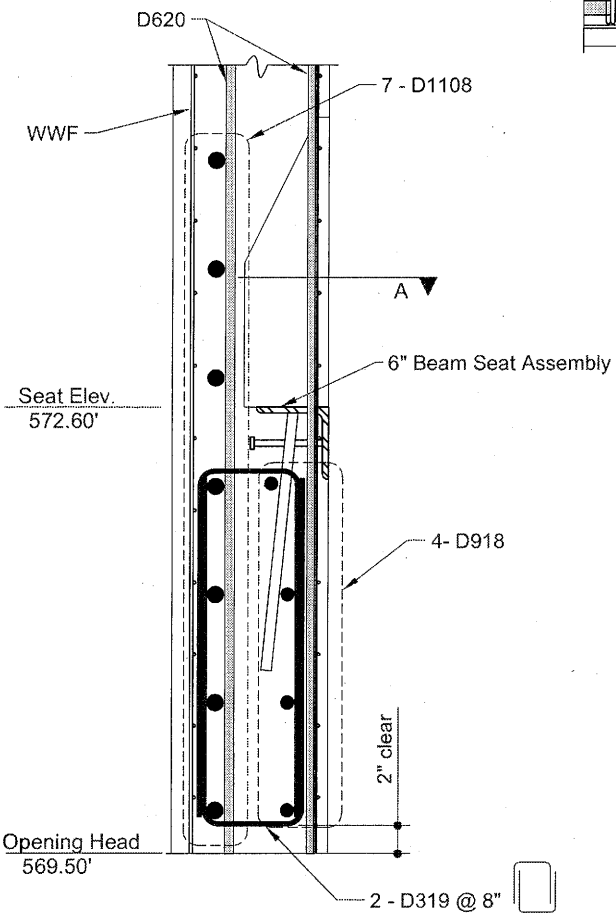

NOTES:

1. Refer to Dwg. S5 - D1 for section locations.
2. Refer to Dwg. S5 - B2 for concrete cover, material specification and drawing references.
3. Detail typical 4 locations above truck doors.

STATE OF TEXAS
JOHN E. GRENDZINSKI
87324
LICENSED PROFESSIONAL ENGINEER
09-07-07

Project:
CITY OF ROCKWALL, TEXAS
2.0 MG ELEVATED WATER STORAGE TANK

No.:	Date:	By:	Revision:

BEAM SEAT INSERT
OVERHEAD TRUCK DOOR SECTION

Contractor:

LANDMARK
Landmark Structures I, LP
1665 Harmon Road Fort Worth, Texas, 76177
Tel: (817) 439-8888 Fax: (817) 439-9001

Design:	Dwn:	Job Number:
JEG	RAG	1190
Chk:	Alloc:	Dwg. Number:
Issued Date: 09 / 07	Scale: 3/4"=1'-0"	S5 - D5

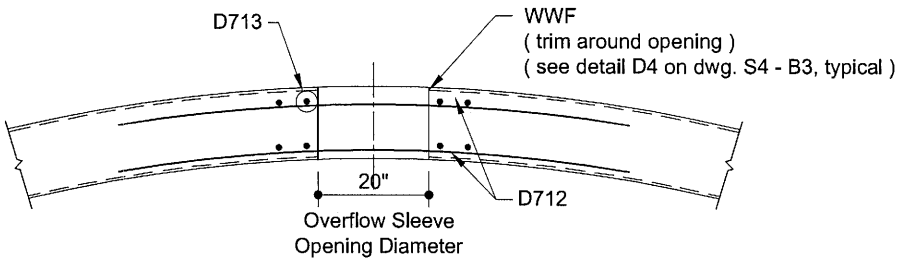

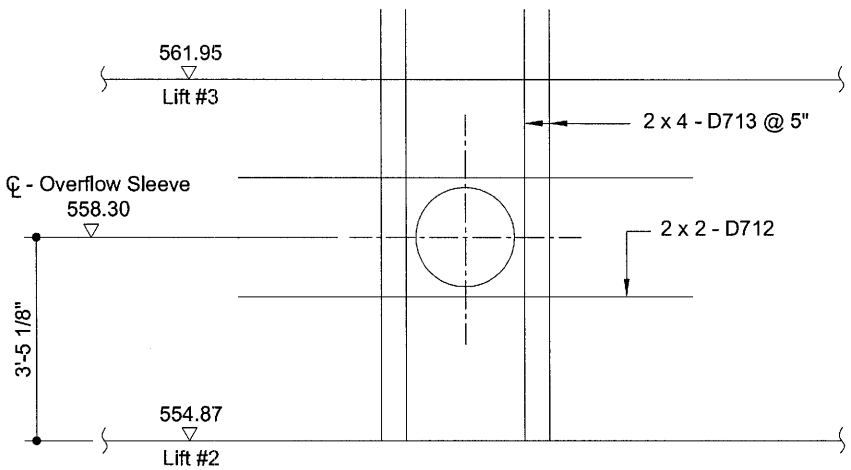

NOTES :

1. Overflow Sleeve size: 20" Ø.
2. Refer to Dwg. S4 - B2 for concrete cover, material specifications and drawing references.

STATE OF TEXAS
JOHN E. GRENDZINSKI
87324
LICENSED
PROFESSIONAL ENGINEER
08-17-07

Project:
CITY OF ROCKWALL, TEXAS
2.0 MG ELEVATED WATER STORAGE TANK

No.:	Date:	By:	Revision:

OVERFLOW SLEEVE OPENING / REINFORCEMENT DETAILS

Contractor:
LANDMARK
Landmark Structures I, LP
1665 Harmon Road Fort Worth, Texas, 76177
Tel: (817) 439-8888 Fax: (817) 439-9001

Design:	Dwn:	Job Number:
JEG	KKC	1190
Chk: DK	Alloc:	Dwg. Number: S5 - E
Issued Date: 06 / 07	Scale: N.T.S.	

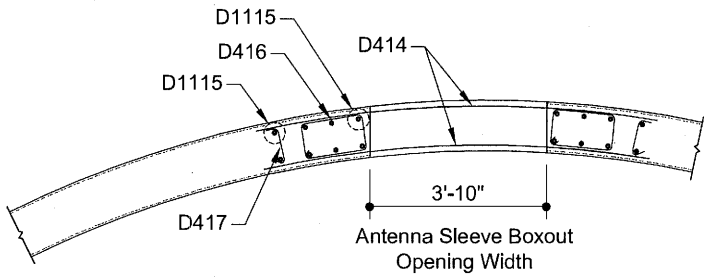

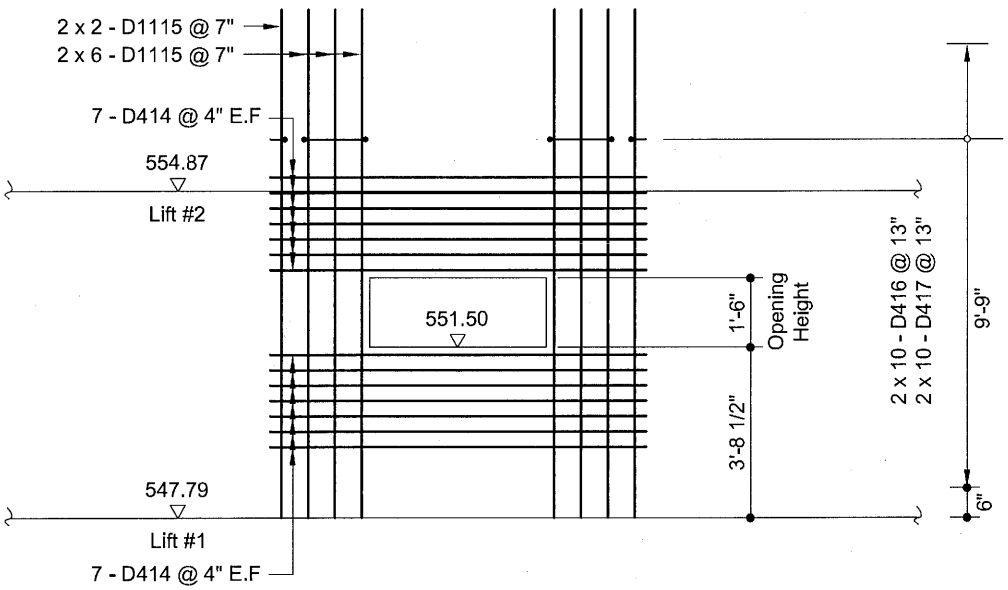

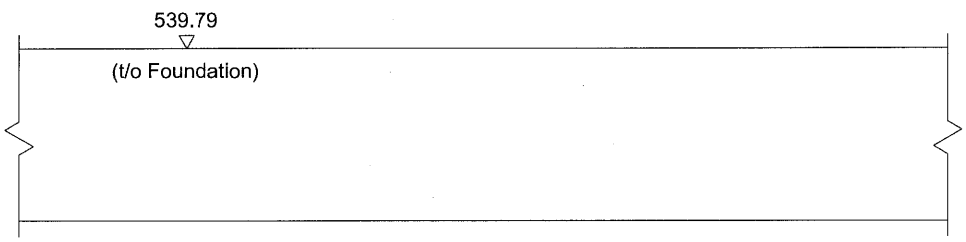

NOTES:

1. Antenna Sleeve Boxout Size : 3'-10" wide x 1'-6" high **(2 locations)**
2. Refer to Dwg. S4 - B2 for concrete cover, material specifications and drawing references.

STATE OF TEXAS
JOHN E. GRENDZINSKI
87324
LICENSED
PROFESSIONAL ENGINEER
08-29-07

Project:
CITY OF ROCKWALL, TEXAS
2.0 MG ELEVATED WATER STORAGE TANK

No.:	Date:	By:	Revision:
A	29/Aug/07	DK	Changed Sleeves to Boxout

ANTENNA SLEEVE BOXOUT OPENING / REINFORCEMENT DETAILS

Contractor:

LANDMARK
Landmark Structures I, LP
1665 Harmon Road Fort Worth, Texas, 76177
Tel: (817) 439-8888 Fax: (817) 439-9001

Design:	Dwn:	Job Number:
JEG	KKC	1190
Chk: DK	Alloc:	Dwg. Number: S5 - G
Issued Date: 06 / 07	Scale: N.T.S.	

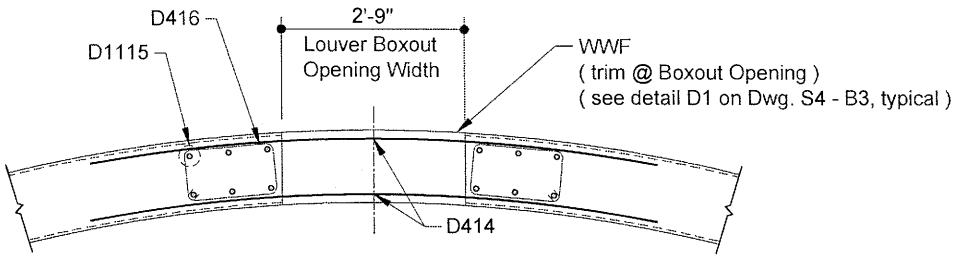

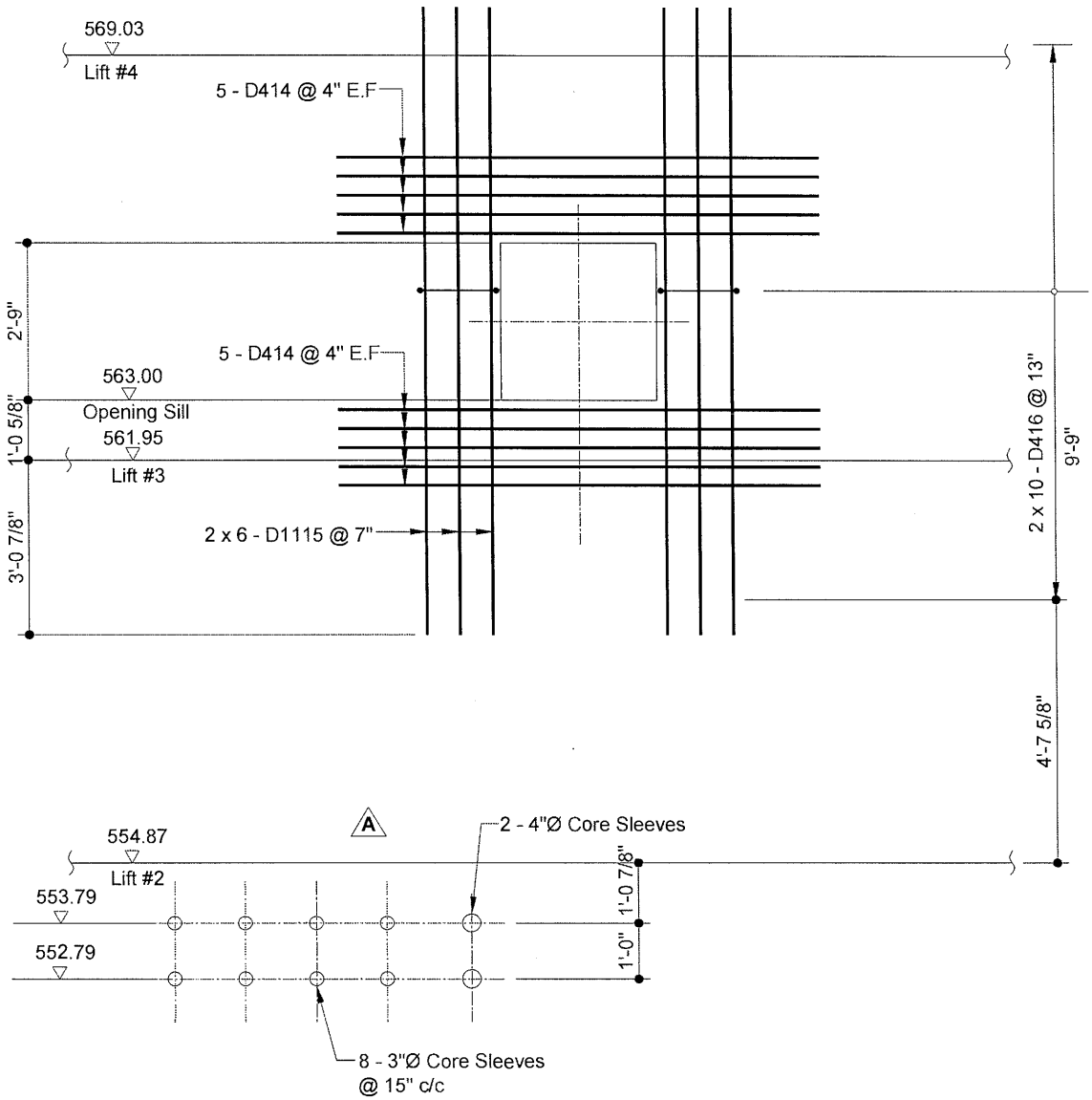

NOTES:

1. Opening size: 2'-9" Wide x 2'-9" High.
2. Refer to Dwg. S4 - B2 for concrete cover, material specifications and drawing references.

STATE OF TEXAS
JOHN E. GRENDZINSKI
87324
LICENSED PROFESSIONAL ENGINEER
05-30-08

Project:
CITY OF ROCKWALL, TEXAS
2.0 MG ELEVATED WATER STORAGE TANK

No.	Date	By	Revision
A	26/Mar/08	ET	Added Core Sleeves

POWER VENTILATION WALL FAN W/ LOUVRE OPENING / REINFORCEMENT DETAILS

Contractor:

LANDMARK
Landmark Structures I, LP
1665 Harmon Road Fort Worth, Texas, 76177
Tel: (817) 439-8888 Fax: (817) 439-9001

Design:	Dwn:	Job Number:
JEG	KKC	1190
Chk: DK	Alloc:	Dwg. Number: S5 - H
Issued Date: 06 / 07	Scale: N.T.S.	

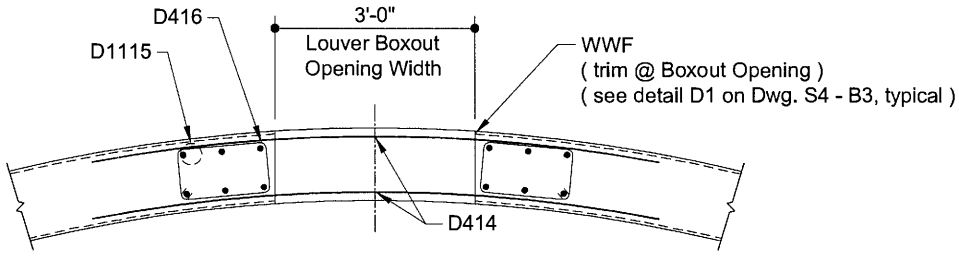

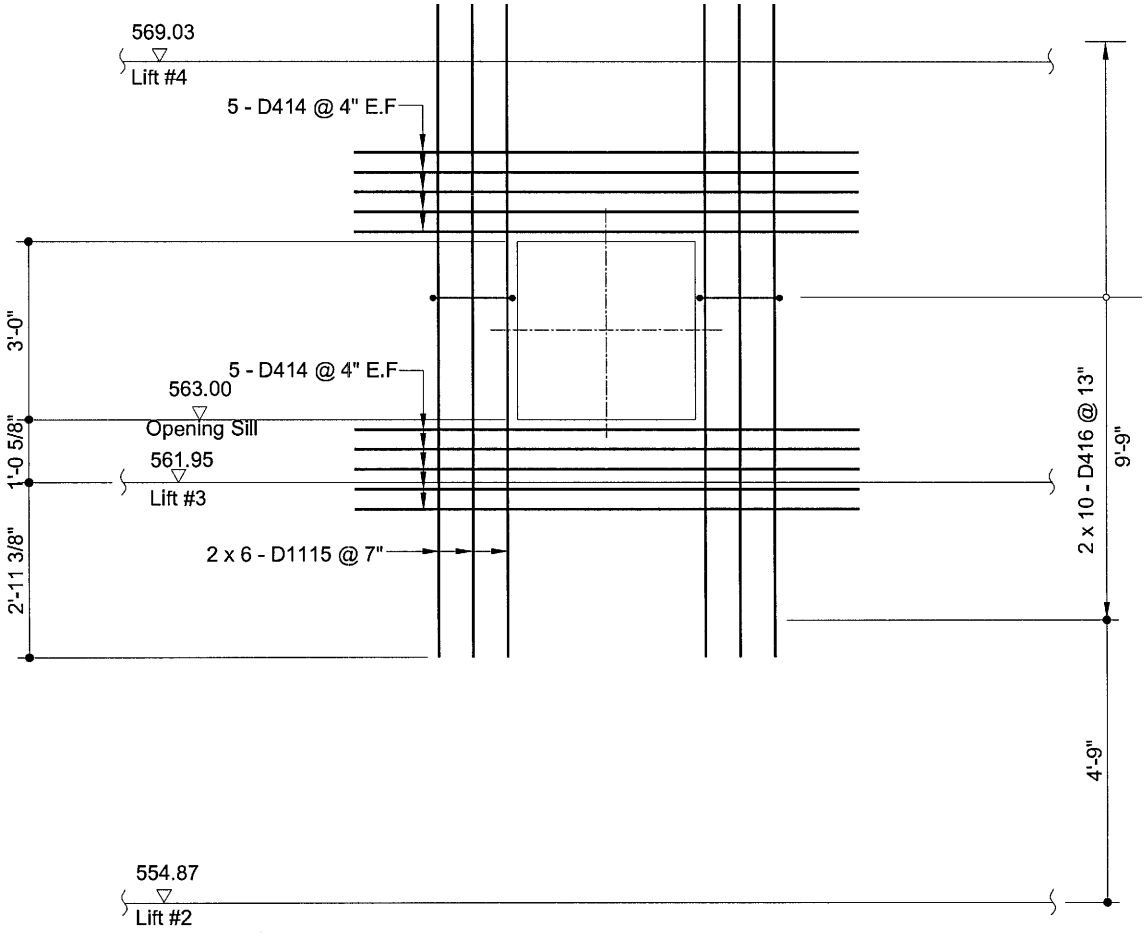

NOTES:

1. Opening size: 3'-0" Wide x 3'-0" High.
2. Refer to Dwg. S4 - B2 for concrete cover, material specifications and drawing references.

STATE OF TEXAS
JOHN E. GRENDZINSKI
87324
LICENSED
PROFESSIONAL ENGINEER
08-17-07

Project:
CITY OF ROCKWALL, TEXAS
2.0 MG ELEVATED WATER STORAGE TANK

No.:	Date:	By:	Revision:

PASSIVE WALL LOUVRE OPENING / REINFORCEMENT DETAILS

Contractor:

LANDMARK
Landmark Structures I, LP
1665 Harmon Road Fort Worth, Texas, 76177
Tel: (817) 439-8888 Fax: (817) 439-9001

Design:	Dwn:	Job Number:
JEG	KKC	1190
Chk: DK	Alloc:	Dwg. Number: S5 - J
Issued Date: 06 / 07	Scale: N.T.S.	

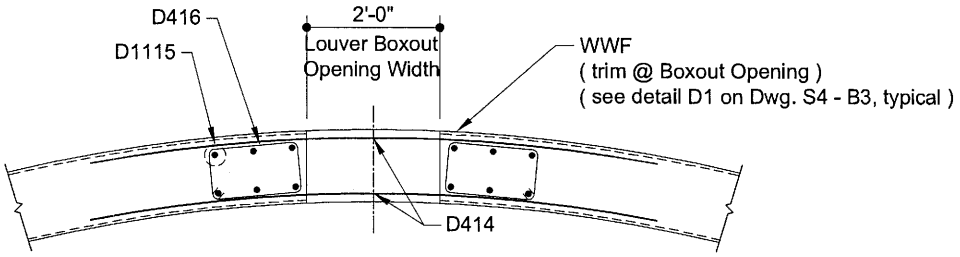

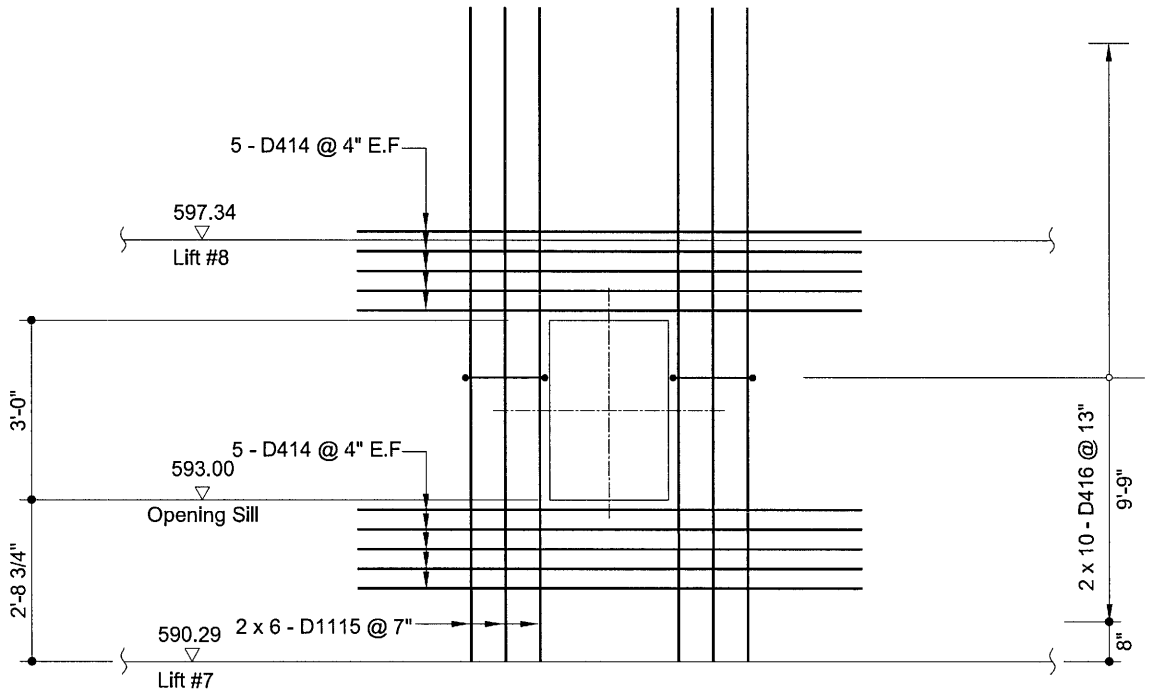

NOTES:

1. Opening size: 2'-0" Wide x 3'-0" High.
2. Refer to Dwg. S4 - B2 for concrete cover, material specifications and drawing references.

STATE OF TEXAS
JOHN E. GRENDZINSKI
87324
LICENSED
PROFESSIONAL ENGINEER
08-17-07

Project:
CITY OF ROCKWALL, TEXAS
2.0 MG ELEVATED WATER STORAGE TANK

No.:	Date:	By:	Revision:

LOUVER BOXOUT OPENING / REINFORCEMENT DETAILS

Contractor:

LANDMARK
Landmark Structures I, LP
1665 Harmon Road Fort Worth, Texas, 76177
Tel: (817) 439-8888 Fax: (817) 439-9001

Design:	Dwn:	Job Number:
JEG	KKC	1190
Chk: DK	Alloc:	Dwg. Number: S5 - K
Issued Date: 06 / 07	Scale: N.T.S.	

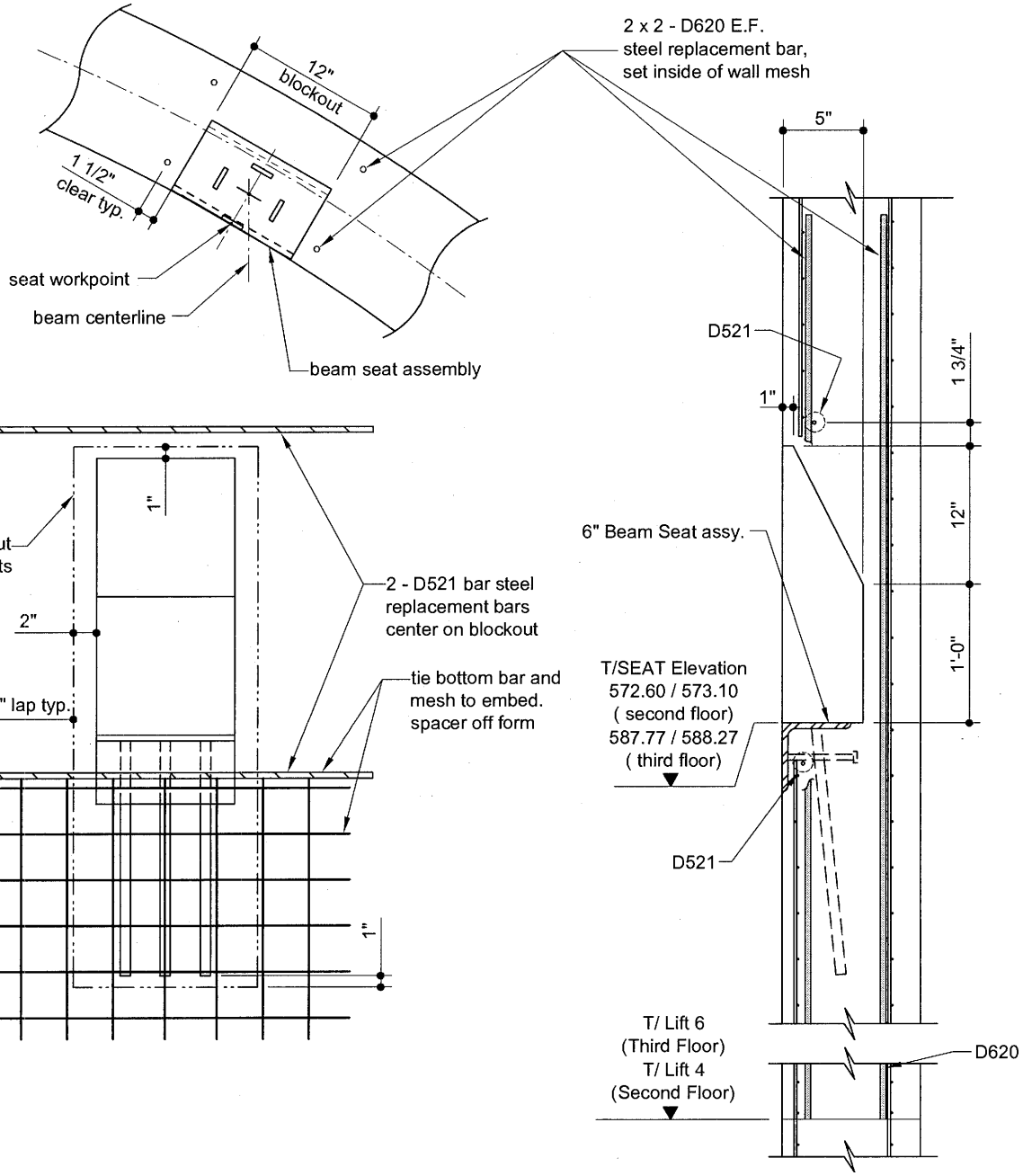

NOTES:

1. Embed assembly and bottom make-up steel tied to form
2. Some mesh not shown for clarity.
3. Beam seat installation tolerances : vertical + 0" / - 1/2"
   horizontal ± 1"
4. See dwg. S5-A1 & S5-A2 for locations / elevations.

STATE OF TEXAS
JOHN E. GRENDZINSKI
87324
LICENSED PROFESSIONAL ENGINEER
09-07-07

Project:
CITY OF ROCKWALL, TEXAS
2.0 MG ELEVATED WATER STORAGE TANK

No.:	Date:	By:	Revision:

INTERMEDIATE FLOOR BEAM SEAT INSERT

Contractor:

LANDMARK
Landmark Structures I, LP
1665 Harmon Road Fort Worth, Texas, 76177
Tel: (817) 439-8888 Fax: (817) 439-9001

Design:	Dwn:	Job Number:
JEG	RAG	1190
Chk:	Alloc:	Dwg. Number:
		S5 - L1
Issued Date:	Scale:	
09 / 07	N.T.S.	

Intermediate Floor - Beam Seat Locations			
Seat Azimuth	Beam	T/ Seat Elev. (2nd Floor)	T/ Seat Elev. (3rd Floor)
15.57°	BM-3	572.60'	587.77'
91.79°	BM-5	573.10'	588.27'
141.59°	BM-4	573.10'	588.27'
164.43°	BM-3	572.60'	587.77'
183.37°	BM-1	572.60'	587.77'
202.94°	BM-2-2	-	587.77'
203.67°	BM-2-1	572.60'	-
219.22°	BM-7	573.10'	588.27'
280.91°	BM-6	573.10'	588.27'
336.33°	BM-2-1	572.60'	-
337.07°	BM-2-2	-	587.77'
356.63°	BM-1	572.60'	587.77'

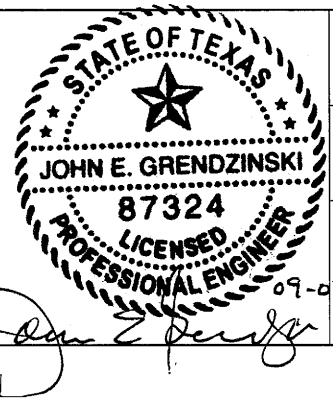

Project:
CITY OF ROCKWALL, TEXAS
2.0 MG ELEVATED WATER STORAGE TANK

No.:	Date:	By:	Revision:

INTERMEDIATE FLOOR BEAM SEAT INSERT

Contractor:

LANDMARK
Landmark Structures I, LP
1665 Harmon Road Fort Worth, Texas, 76177
Tel: (817) 439-8888 Fax: (817) 439-9001

Design:	Dwn:	Job Number:
JEG	RAG	1190
Chk:	Alloc:	Dwg. Number:
Issued Date: 06 / 07	Scale: N.T.S.	S5 - L2

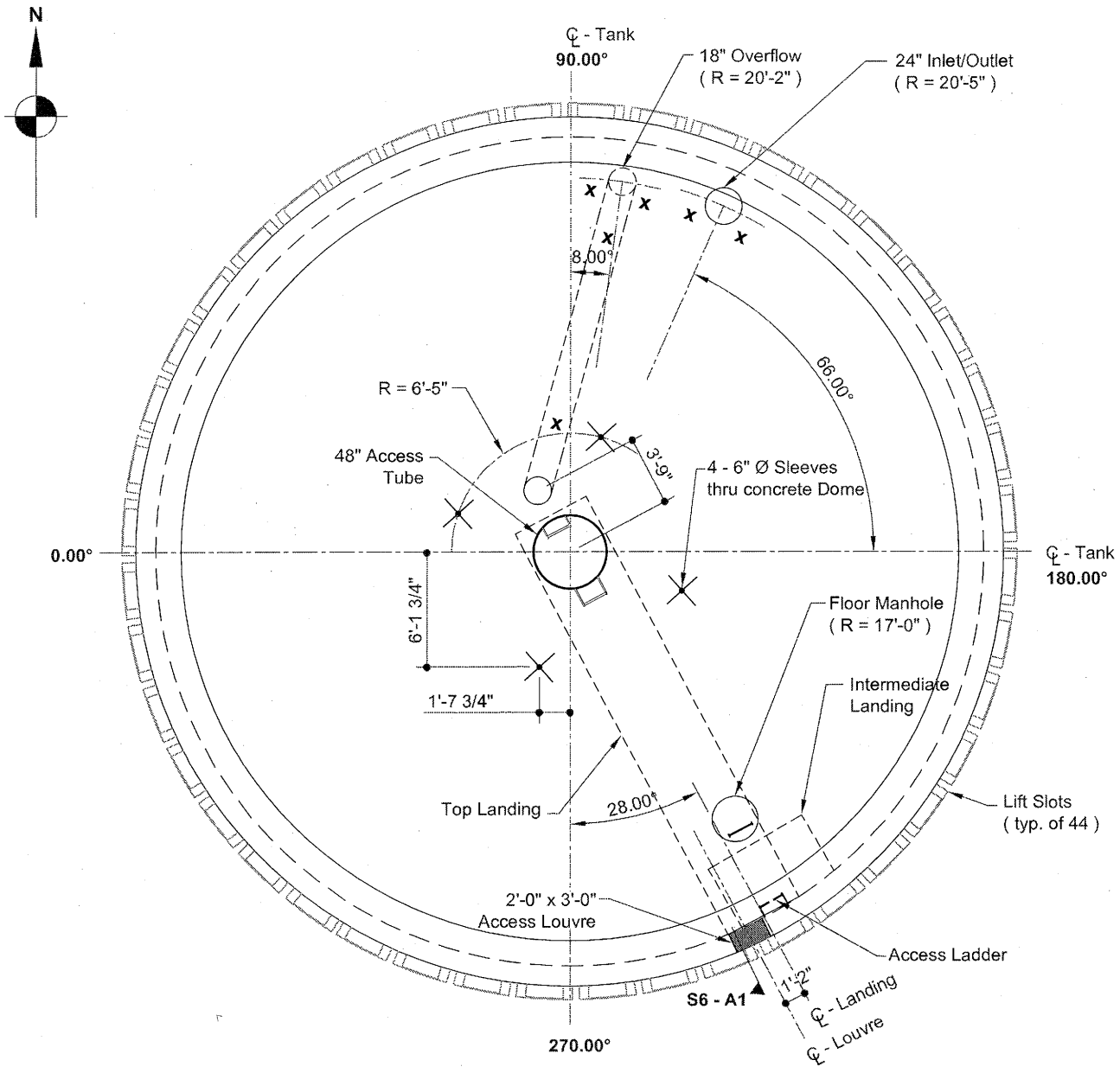

NOTES:

1. Plan is concrete support structure only. Steel tank and connection details not shown.
2. Insert anchor locations are indicated by an **x**. Inserts are 3/4" unless otherwise shown. Refer to S6 - B1 for landing inserts locations and details.

Drawing References:

S6 - B1 - Dome Slab - Insert Details
S6 - A1 / A2 - Upper Wall / Ring Beam / Dome Slab - Section / Concrete Details / Reinforcing Steel
325 - A1 - 30" Floor Manhole
327 - A - Paint Rail Access Louvre
405 - A2 - Inlet Riser - Floor Penetration Details
406 - A2 - Overflow Riser / Access Tube - Floor Penetration

STATE OF TEXAS
JOHN E. GRENDZINSKI
87324
LICENSED
PROFESSIONAL ENGINEER
10-17-07

Project:
CITY OF ROCKWALL, TEXAS
2.0 MG ELEVATED WATER STORAGE TANK

No.	Date:	By:	Revision:

DOME FLOOR SLAB PLAN

Contractor:

LANDMARK
Landmark Structures I, LP
1665 Harmon Road Fort Worth, Texas, 76177
Tel: (817) 439-8888 Fax: (817) 439-9001

Design:	Dwn:	Job Number:
JEG	VP	1190
Chk: DK	Alloc:	Dwg. Number: S6
Issued Date: 06 / 07	Scale: N.T.S.	

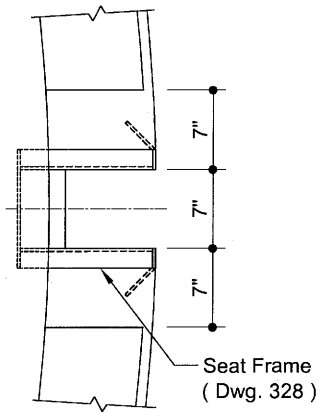

Lift Slot Plan

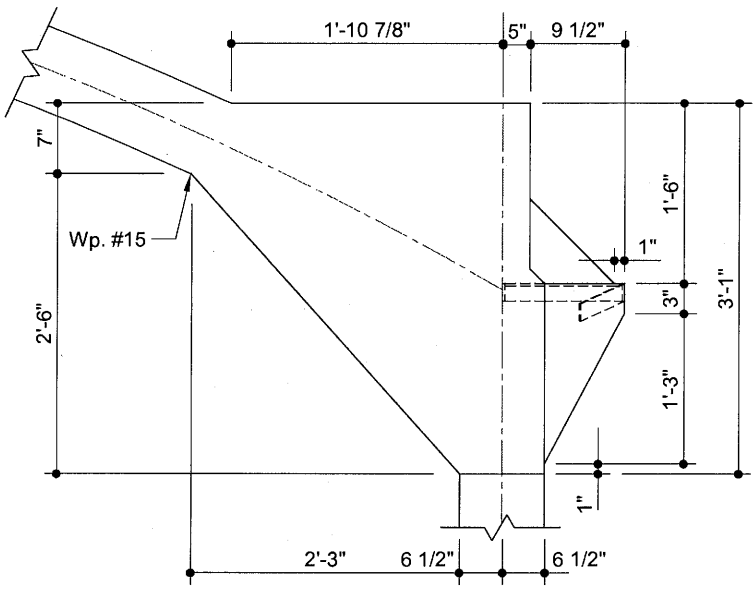

Ring Beam Detail

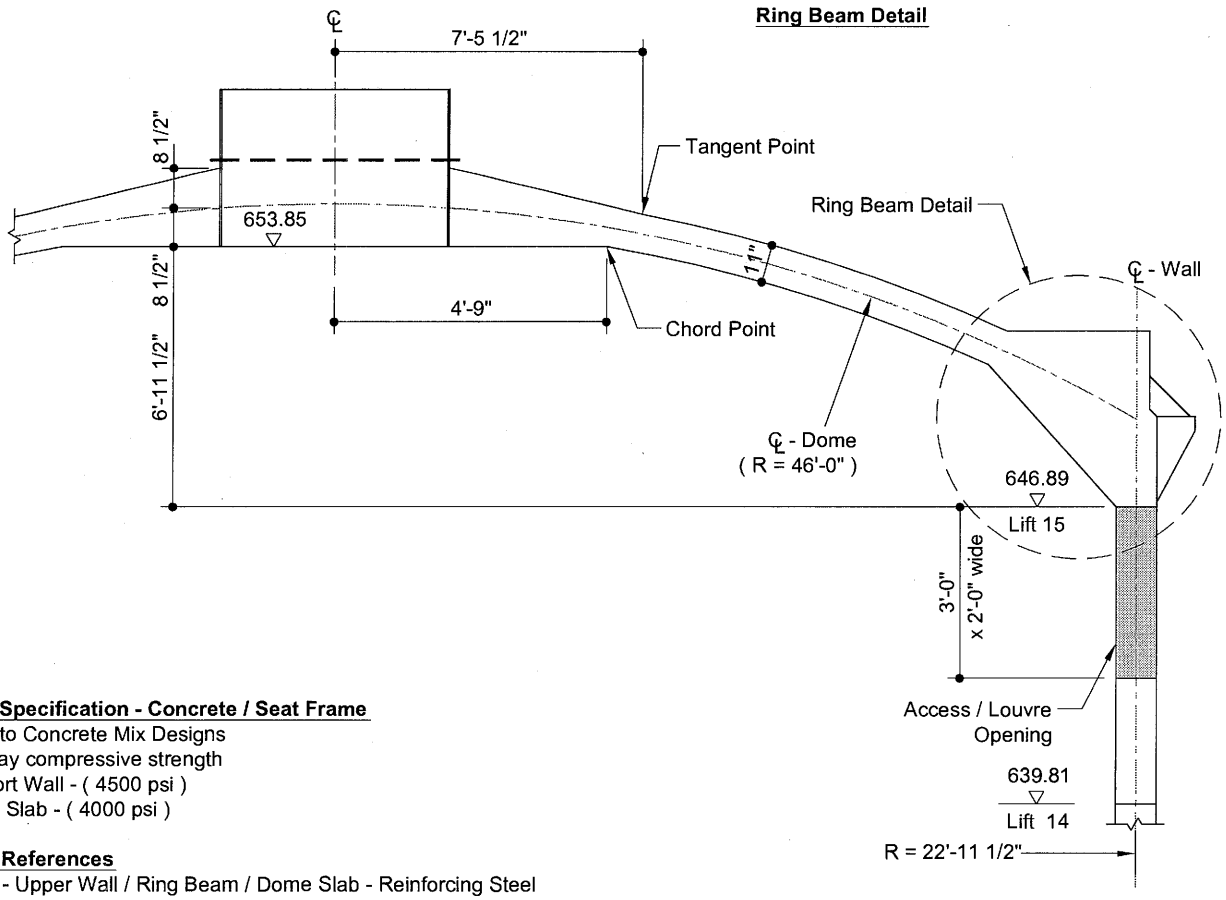

NOTES :

Material Specification - Concrete / Seat Frame

1. Refer to Concrete Mix Designs
2. 28 - day compressive strength
   Support Wall - (4500 psi)
   Dome Slab - (4000 psi)

Drawing References

S6 - A2 - Upper Wall / Ring Beam / Dome Slab - Reinforcing Steel

STATE OF TEXAS
JOHN E. GRENDZINSKI
87324
LICENSED PROFESSIONAL ENGINEER
10-17-07

Project:
CITY OF ROCKWALL, TEXAS
2.0 MG ELEVATED WATER STORAGE TANK

No.:	Date:	By:	Revision:

UPPER WALL / RING BEAM / DOME SLAB SECTION / CONCRETE DETAILS

Contractor:

LANDMARK
Landmark Structures I, LP
1665 Harmon Road Fort Worth, Texas, 76177
Tel: (817) 439-8888 Fax: (817) 439-9001

Design:	Dwn:	Job Number:
JEG	KKC	1190
Chk: DK	Alloc:	Dwg. Number: S6 - A1
Issued Date: 06 / 07	Scale: N.T.S.	

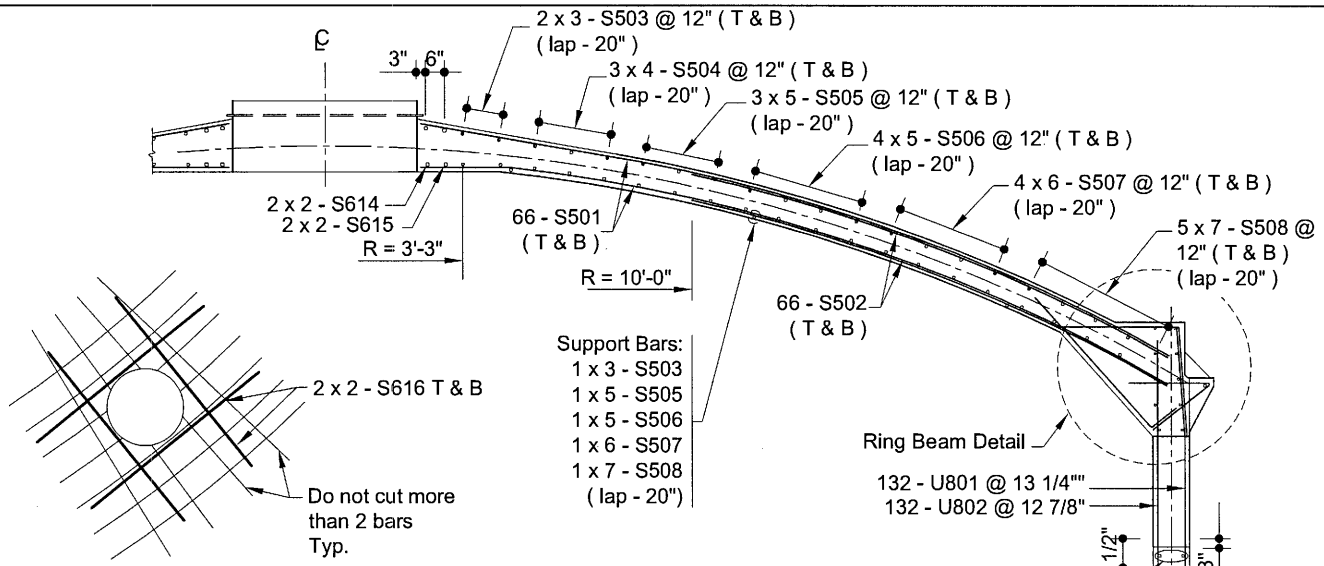

Additional Rebar @ Floor Manhole and Inlet/Outlet Pipe Penetration

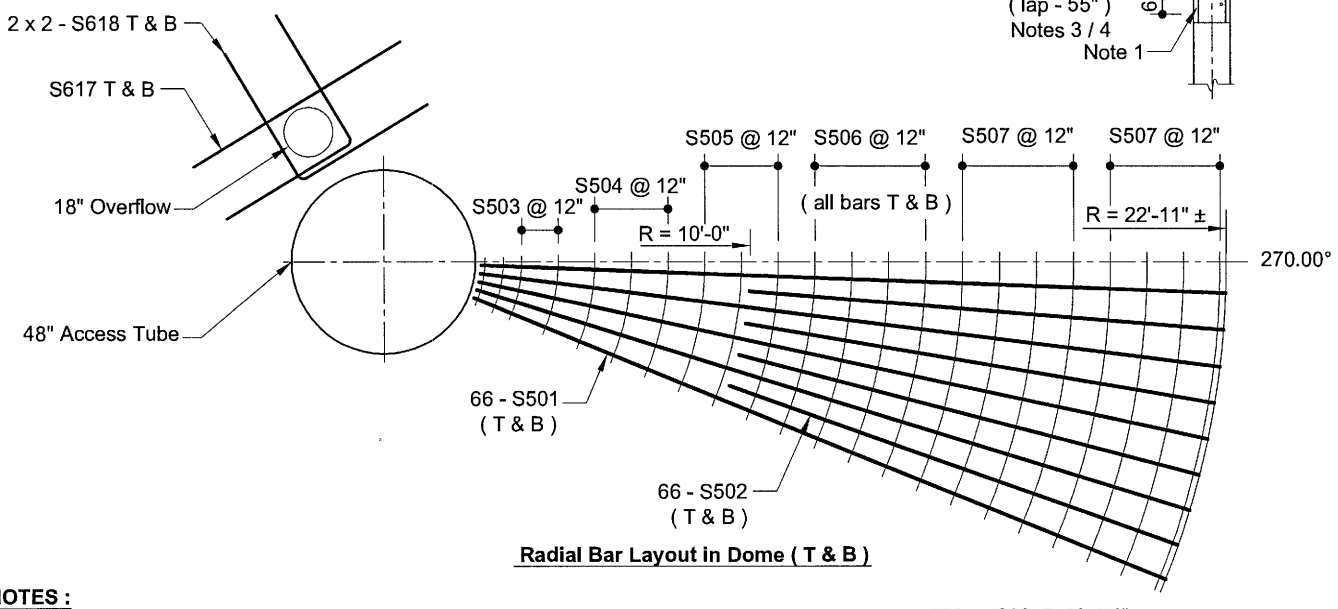

Radial Bar Layout in Dome (T & B)

NOTES :

1. WWF in wall not shown for clarity.
2. Concrete Cover for Reinforcement :
   Wall exterior - 1 - 1/2" to WWF
   Wall interior - 1" to WWF
   Dome Slab - 1" to deformed bars
3. Stagger splices on circumferential max. 50% at one location.
4. Reinforcement spacing at sections indicated is approximately equal in vertical direction.
5. Center bar under Access / Louvre Opening.
6. Inner WWF may be cut at top of wall to facilitate placing ring beam reinforcement.

Material Specifications - Reinforcing Steel

- ASTM A615 Gr. 60 - deformed bars
- ASTM A185 - welded wire fabric

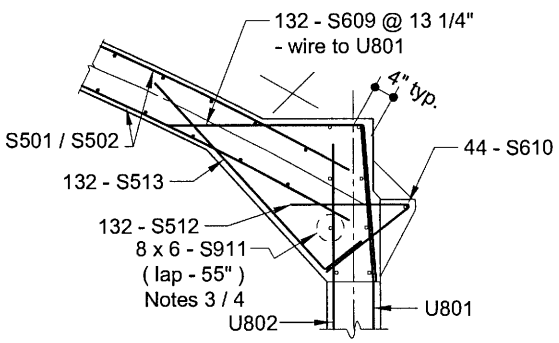

Ring Beam Reinforcing Detail

STATE OF TEXAS
JOHN E. GRENDZINSKI
87324
LICENSED PROFESSIONAL ENGINEER
05-17-07

Project:
CITY OF ROCKWALL, TEXAS
2.0 MG ELEVATED WATER STORAGE TANK

No.	Date:	By:	Revision:

UPPER WALL / RING BEAM / DOME SLAB REINFORCING STEEL

Contractor:

LANDMARK
Landmark Structures I, LP
1665 Harmon Road Fort Worth, Texas, 76177
Tel: (817) 439-8888 Fax: (817) 439-9001

Design:	Dwn:	Job Number:
JEG	KKC	1190
Chk:	Alloc:	Dwg. Number:
DK		S6 - A2
Issued Date:	Scale:	
06 / 07	N.T.S.	

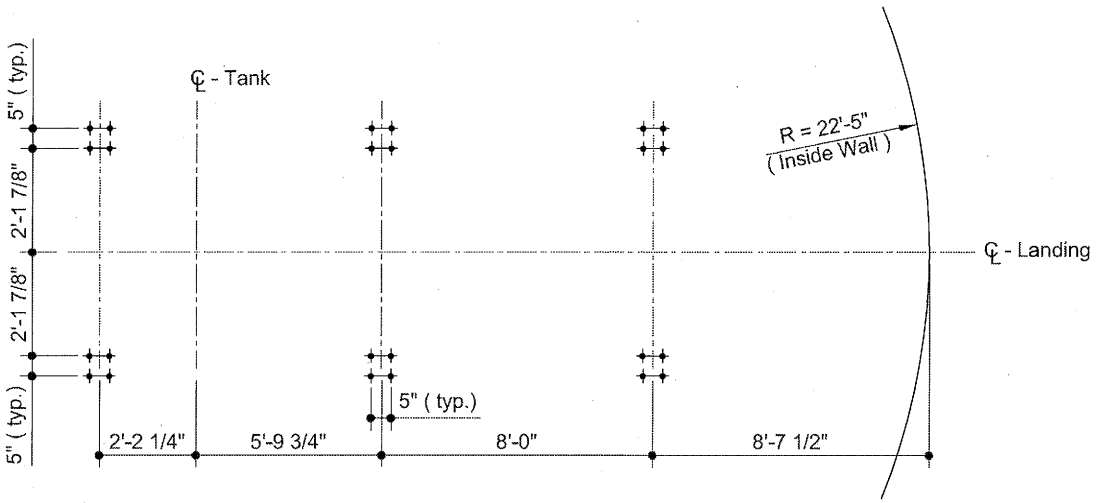

Hanger Insert Location
Plan

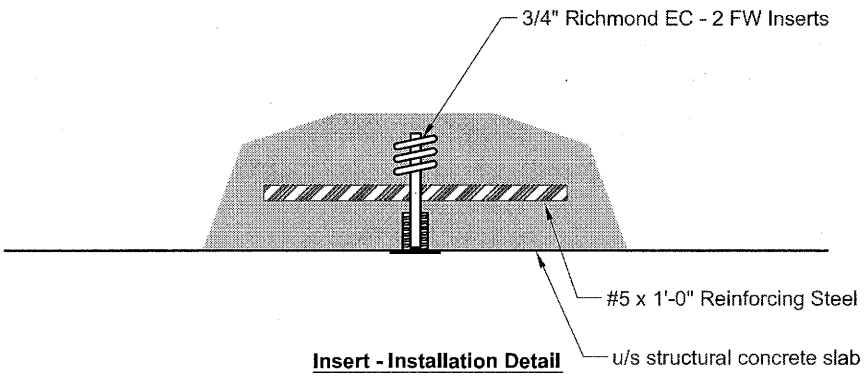

Insert - Installation Detail

NOTES :

1. Install Richmond anchors according to installation detail.
2. Locate landing inserts according to plan above. Additional inserts as specified below:
   - each side of Inlet, Outlet & Overflow riser pipes, 4' in from wall
   - overflow pipe hangers (2)
   - pulley (1)

as required for construction:
   - center support (8)
   - ladder (1)
   - tower removal (2)
   - form removal (1)
   - for welders at landing (2)

STATE OF TEXAS
JOHN E. GRENDZINSKI
87324
LICENSED PROFESSIONAL ENGINEER
10-17-07

Project:
CITY OF ROCKWALL, TEXAS
2.0 MG ELEVATED WATER STORAGE TANK

No.	Date:	By:	Revision:

DOME SLAB INSERT DETAILS

Contractor:

LANDMARK
Landmark Structures I, LP
1665 Harmon Road Fort Worth, Texas, 76177
Tel: (817) 439-8888 Fax: (817) 439-9001

Design:	Dwn:	Job Number:
JEG	OT	1190
Chk:	Alloc:	Dwg. Number:
DK		S6 - B1
Issued Date:	Scale:	
06 / 07	N.T.S.	

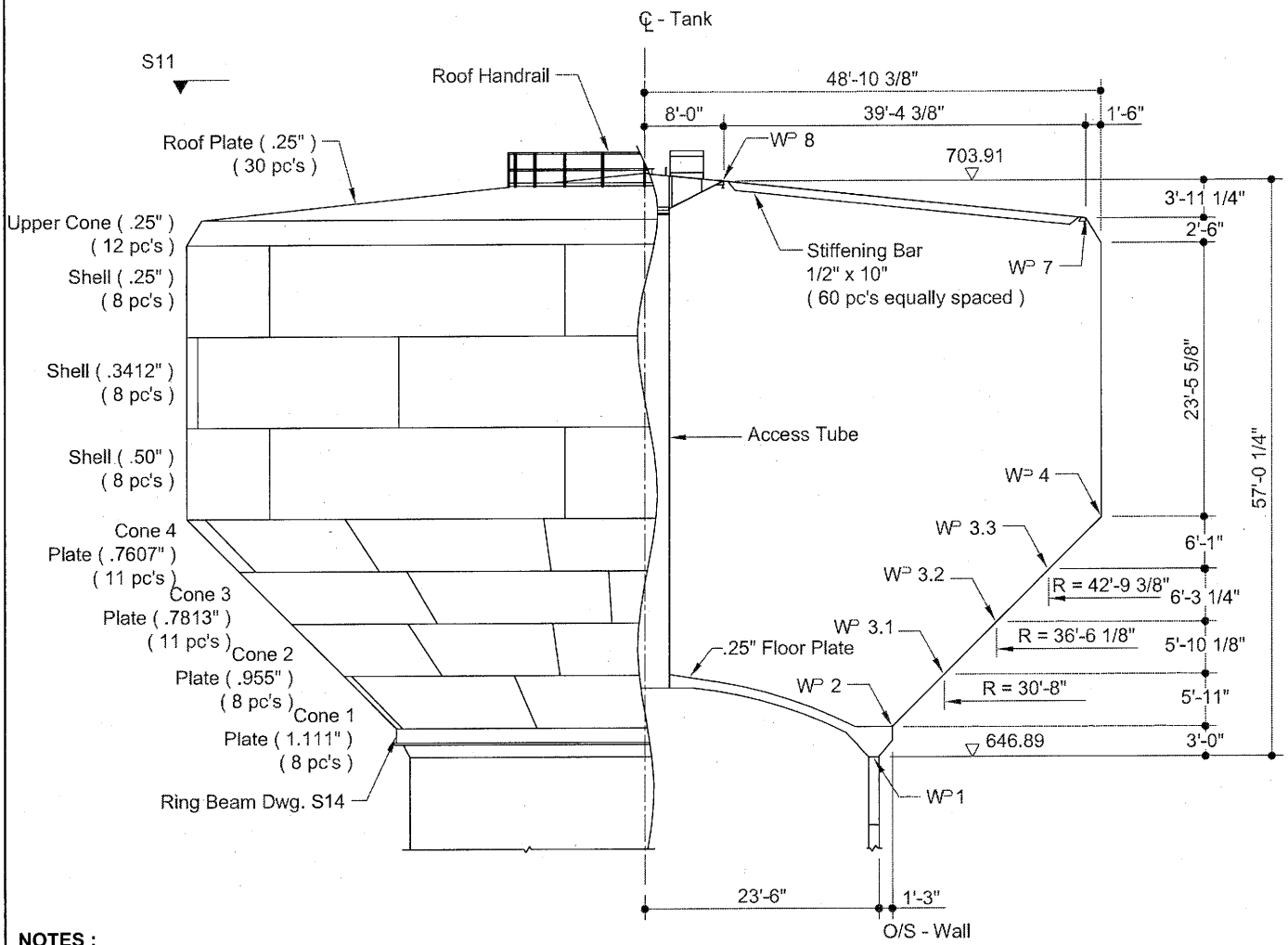

NOTES :

W$_P$ Elevations

# 1 - 646.89	# 4 - 674.00
# 2 - 649.89	# 6 - 697.47
# 3.1 - 655.81	# 7 - 699.97
# 3.2 - 661.65	# 8 - 703.91
# 3.3 - 667.92	

Material Specifications - Reinforcing Steel

Roof Stiffening - ASTM A529 Gr.55
Cone 1 & Cone 2 - ASTM A36 with minimum 40 ksi Yield Strength
All other Plates & Structural Shapes - ASTM A36

Drawing References

S11 - Steel Tank - Roof Plan
S12 - Steel Tank - Erection Details
S14 - Steel Tank - Ring Beam Connection
S15 - Steel Tank - Acccess Tube / Top Platform

STATE OF TEXAS
JOHN E. GRENDZINSKI
87324
LICENSED PROFESSIONAL ENGINEER
10-18-07

Project:
CITY OF ROCKWALL, TEXAS
2.0 MG ELEVATED WATER STORAGE TANK

No.:	Date:	By:	Revision:

STEEL TANK ELEVATION / SECTION

Contractor:

LANDMARK
Landmark Structures I, LP
1665 Harmon Road Fort Worth, Texas, 76177
Tel: (817) 439-8888 Fax: (817) 439-9001

Design:	Dwn:	Job Number:
JEG	DK	1190
Chk: JEG	Alloc:	Dwg. Number: S10 - F
Issued Date: 06 / 07	Scale: N.T.S.	

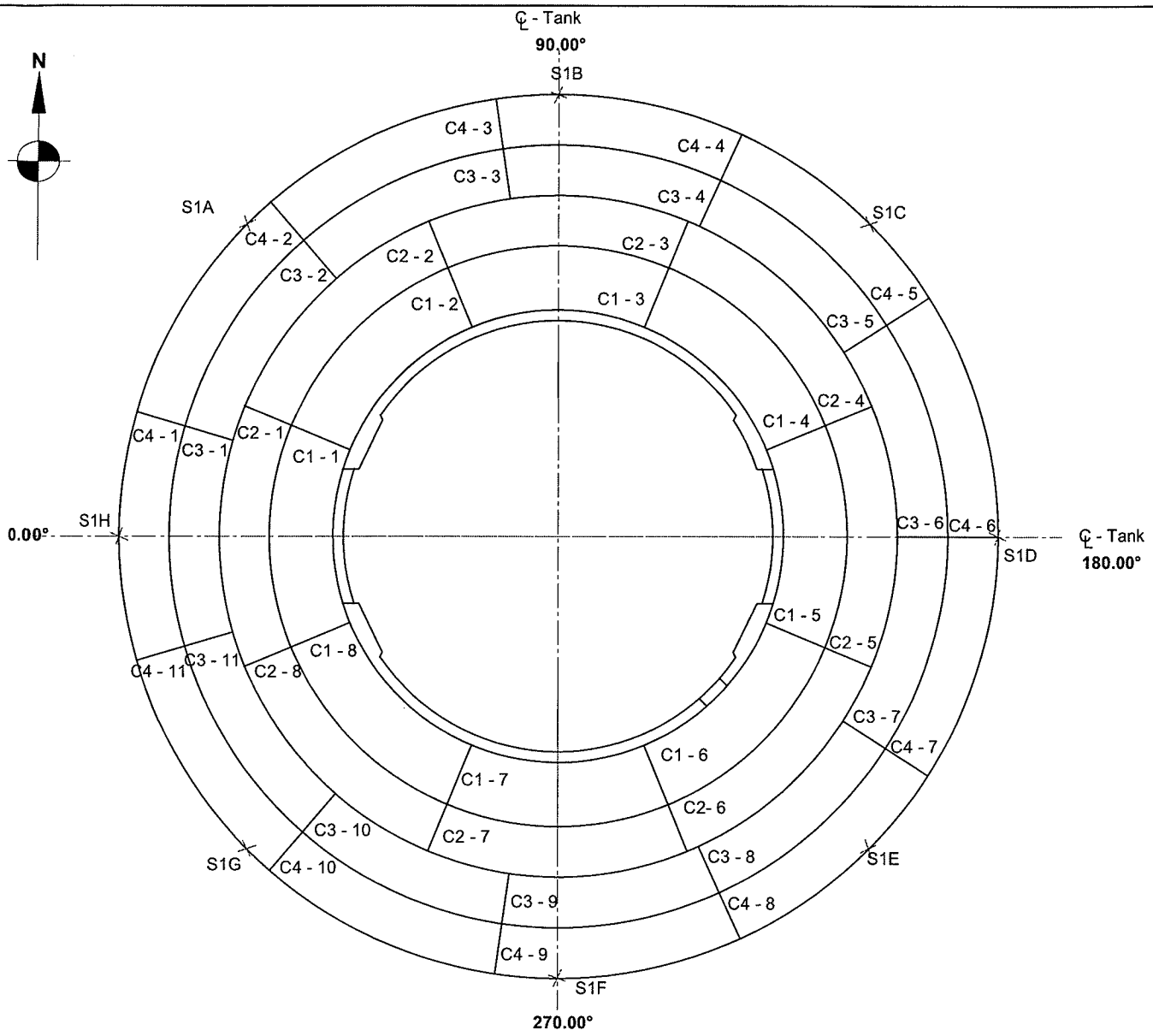

Floor Cone Plates

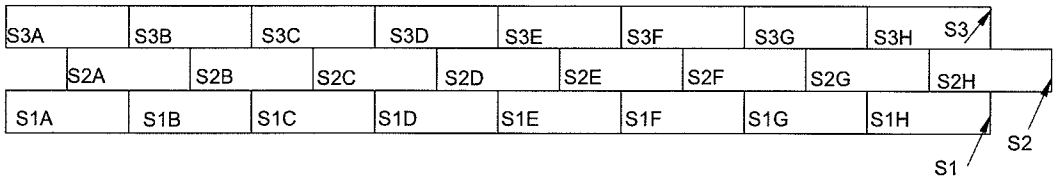

Wall Plates (Inside View)

STATE OF TEXAS
JOHN E. GRENDZINSKI
87324
LICENSED PROFESSIONAL ENGINEER
12-05-07

Project:
CITY OF ROCKWALL, TEXAS
2.0 MG ELEVATED WATER STORAGE TANK

No.:	Date:	By:	Revision:

STEEL TANK WELDS LAYOUT

Contractor:
LANDMARK
Landmark Structures I, LP
1665 Harmon Road Fort Worth, Texas, 76177
Tel: (817) 439-8888 Fax: (817) 439-9001

Design:	Dwn:	Job Number:
JEG	OT	1190
Chk:	Alloc:	
DK		Dwg. Number:
Issued Date:	Scale:	S10 - G
06 / 07	N.T.S.	

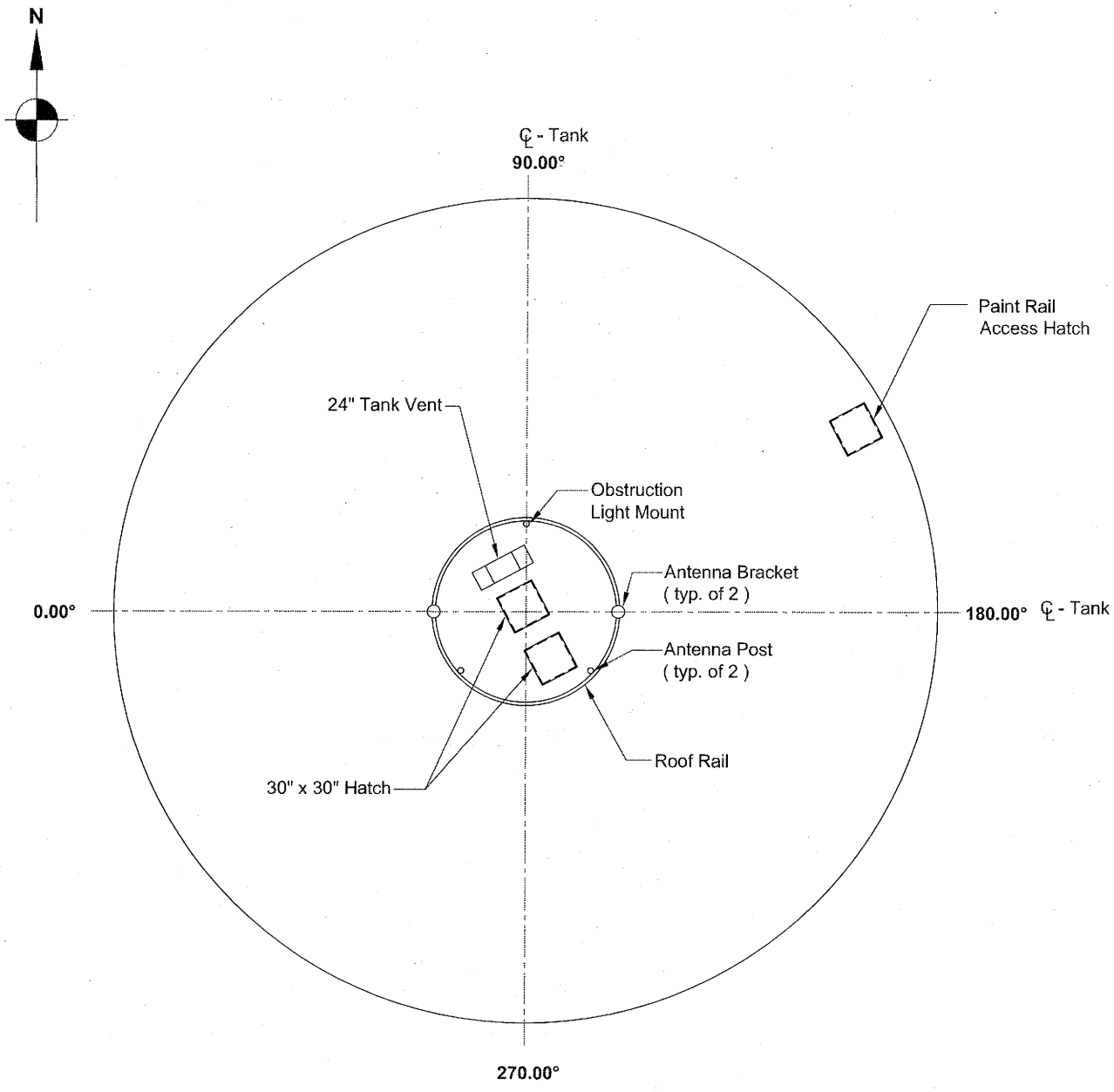

NOTES:

Drawing References:

S15	- Steel Tank - Access Tube / Top Platform
320 - B	- 30" x 30" Access Hatch Cover - Assembly / Installation
322 - A	- Roof Rail - Layout
323 - A	- 24" Vent - Assembly / Installation
324 - B	- Paint Rail Access Hatch
332 - A	- Obstruction Light Mount Details

STATE OF TEXAS
JOHN E. GRENDZINSKI
87324
LICENSED
PROFESSIONAL ENGINEER
12-05-07

Project:
CITY OF ROCKWALL, TEXAS
2.0 MG ELEVATED WATER STORAGE TANK

No.:	Date:	By:	Revision:

STEEL TANK - ROOF PLAN

Contractor:

LANDMARK
Landmark Structures I, LP
1665 Harmon Road Fort Worth, Texas, 76177
Tel: (817) 439-8888 Fax: (817) 439-9001

Design: JEG	Dwn: VP	Job Number: 1190	
Chk: DK	Alloc:	Dwg. Number: S11	
Issued Date: 06 / 07	Scale: N.T.S.		

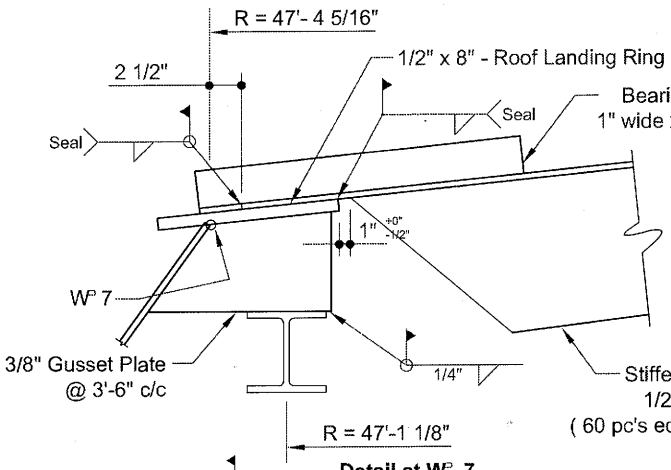

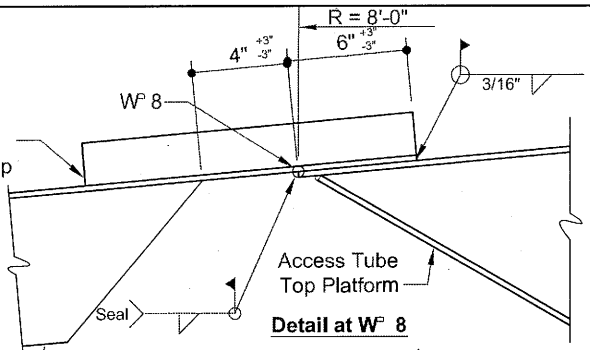

Detail at W° 8

R = 47'-1 1/8"

Detail at W° 7

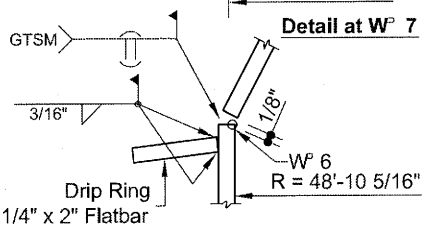

Detail at W° 6

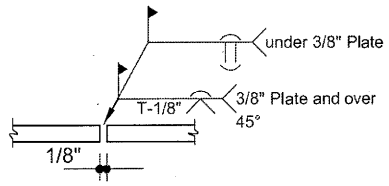

Shell Plate - Vertical Joint

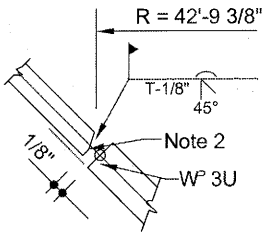

Detail at W° 3.3

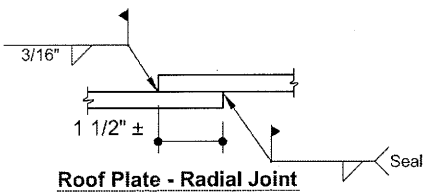

Roof Plate - Radial Joint

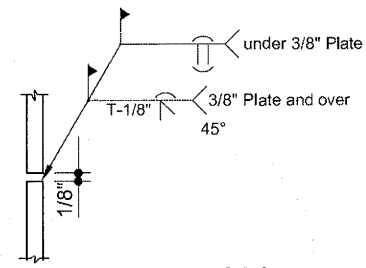

Shell Plate - Horizontal Joint

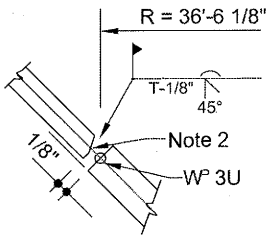

Detail at W° 3.2

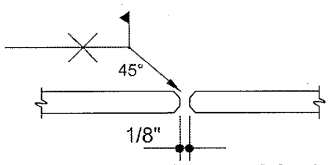

Roof Landing Ring - Radial Joint

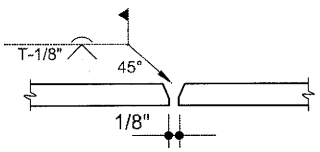

Floor Cone Plate - Radial Joint

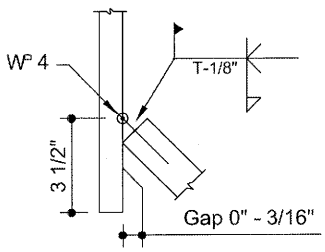

Detail at W° 4

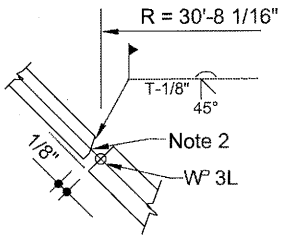

Detail at W° 3.1

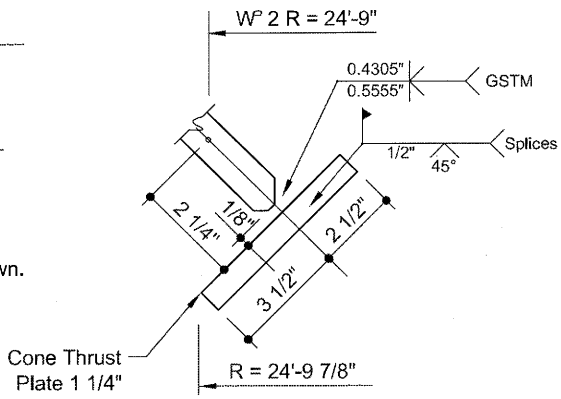

Detail at W° 2

NOTES :

1. All butt joint welds are full penetration requiring backgouge unless otherwise shown.
2. Align plates along ℄

Material Specification (unless otherwise noted)
Roof Stiffening Bar - ASTM A529 Gr.55
Cone 1 & Cone 2 - ASTM A36 with minimum 40 ksi yield strength
All Remaining Plates and Structural Shapes - ASTM A36

STATE OF TEXAS
JOHN E. GRENDZINSKI
87324
LICENSED
PROFESSIONAL ENGINEER
10-18-07

Project:
CITY OF ROCKWALL, TEXAS
2.0 MG ELEVATED WATER STORAGE TANK

No.:	Date:	By:	Revision:

STEEL TANK ERECTION DETAILS

Contractor:
LANDMARK
Landmark Structures I, LP
1665 Harmon Road Fort Worth, Texas, 76177
Tel: (817) 439-8888 Fax: (817) 439-9001

Design:	Dwn:	Job Number:
JEG	KKC	1190
Chk: DK	Alloc:	Dwg. Number: S12 - B
Issued Date: 06 / 07	Scale: N.T.S.	

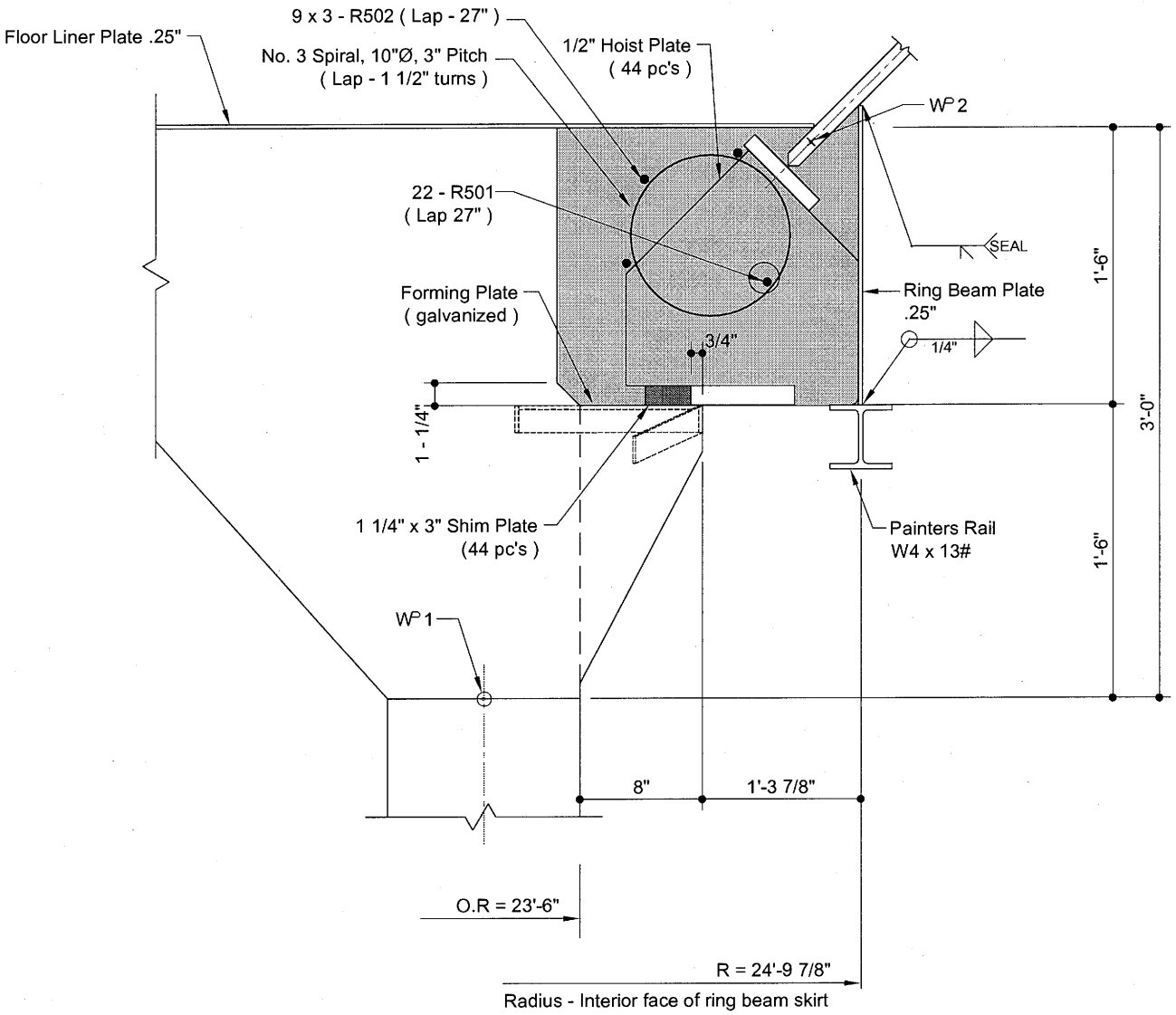

NOTES :

Material Specifications
Ring Beam Concrete - 4000 psi
Reinforcing Steel - ASTM A615 Gr. 60
Steel Plate / Structural Shapes - ASTM A36 or equal

Drawing References:
S6 - Dome Floor Slab - Plan

STATE OF TEXAS
JOHN E. GRENDZINSKI
87324
LICENSED
PROFESSIONAL ENGINEER
10-17-07

Project:
CITY OF ROCKWALL, TEXAS
2.0 MG ELEVATED WATER STORAGE TANK

No.:	Date:	By:	Revision:

STEEL TANK
RING BEAM CONNECTION

Contractor:

LANDMARK
Landmark Structures I, LP
1665 Harmon Road Fort Worth, Texas, 76177
Tel: (817) 439-8888 Fax: (817) 439-9001

Design:	Dwn:	Job Number:
JEG	KKC	1190
Chk: DK	Alloc:	Dwg. Number: S14 - A
Issued Date: 06 / 07	Scale: N.T.S.	

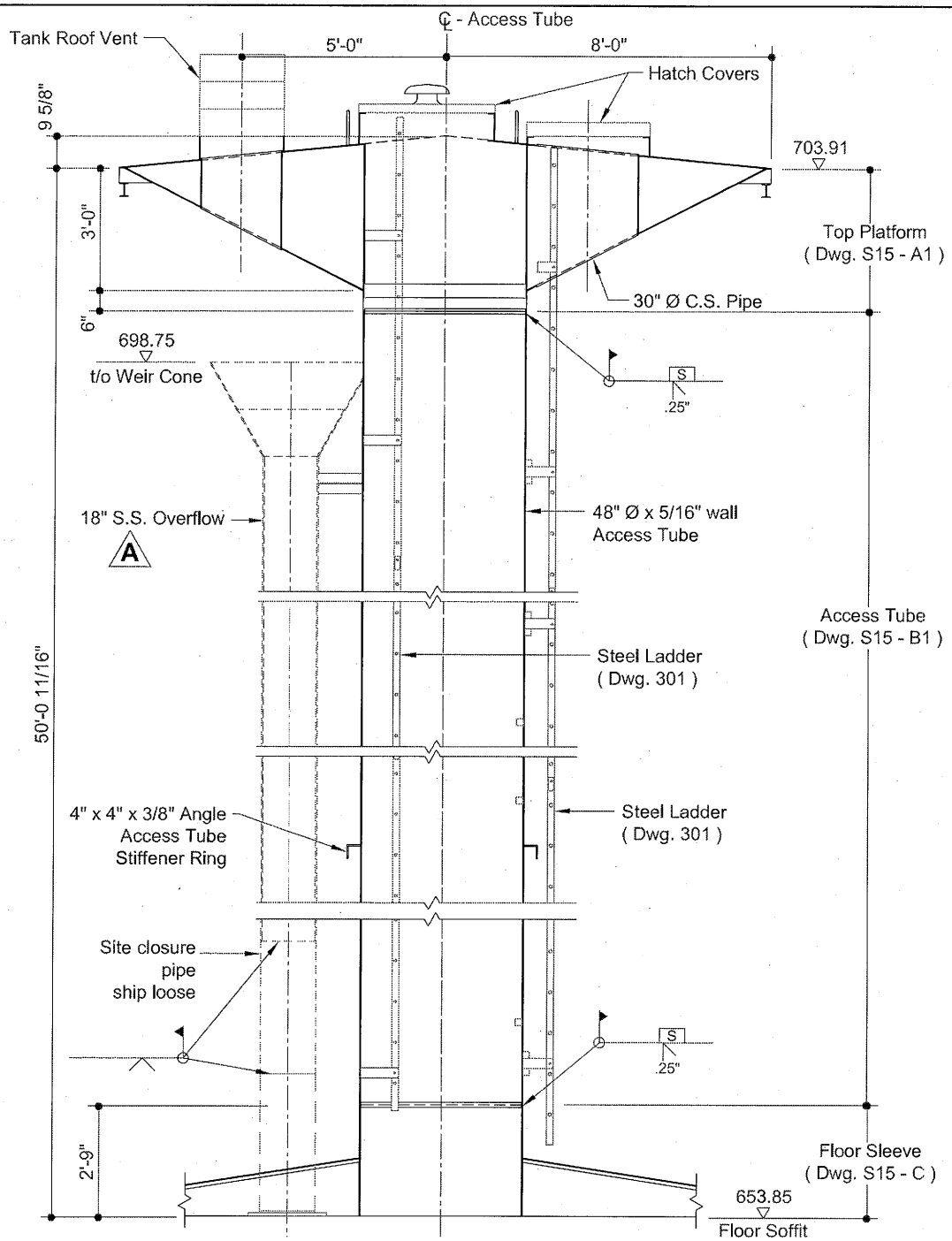

NOTES:

Material Specification

1. Riser Pipe ASTM - A139 Gr.B
2. Other Components - ASTM A36 or equal.

Drawing References

- S15 - A1 - Top Platform - Plan / Section
- S15 - B1 - Access Tube - Layout
- S15 - C - Access Tube Floor Sleeve

STATE OF TEXAS
JOHN E. GRENDZINSKI
87324
LICENSED
PROFESSIONAL ENGINEER
12-05-07

Project:
CITY OF ROCKWALL, TEXAS
2.0 MG ELEVATED WATER STORAGE TANK

No.	Date:	By:	Revision:
A	08/Nov/07	KKC	Changed Overflow to Stainless Steel

STEEL TANK
ACCESS TUBE / TOP PLATFORM

Contractor:

LANDMARK
Landmark Structures I, LP
1665 Harmon Road Fort Worth, Texas, 76177
Tel: (817) 439-8888 Fax: (817) 439-9001

Design:	Dwn:	Job Number:
JEG	VJ	1190
Chk:	Alloc:	Dwg. Number:
DK		S15
Issued Date:	Scale:	
06 / 07	N.T.S.	

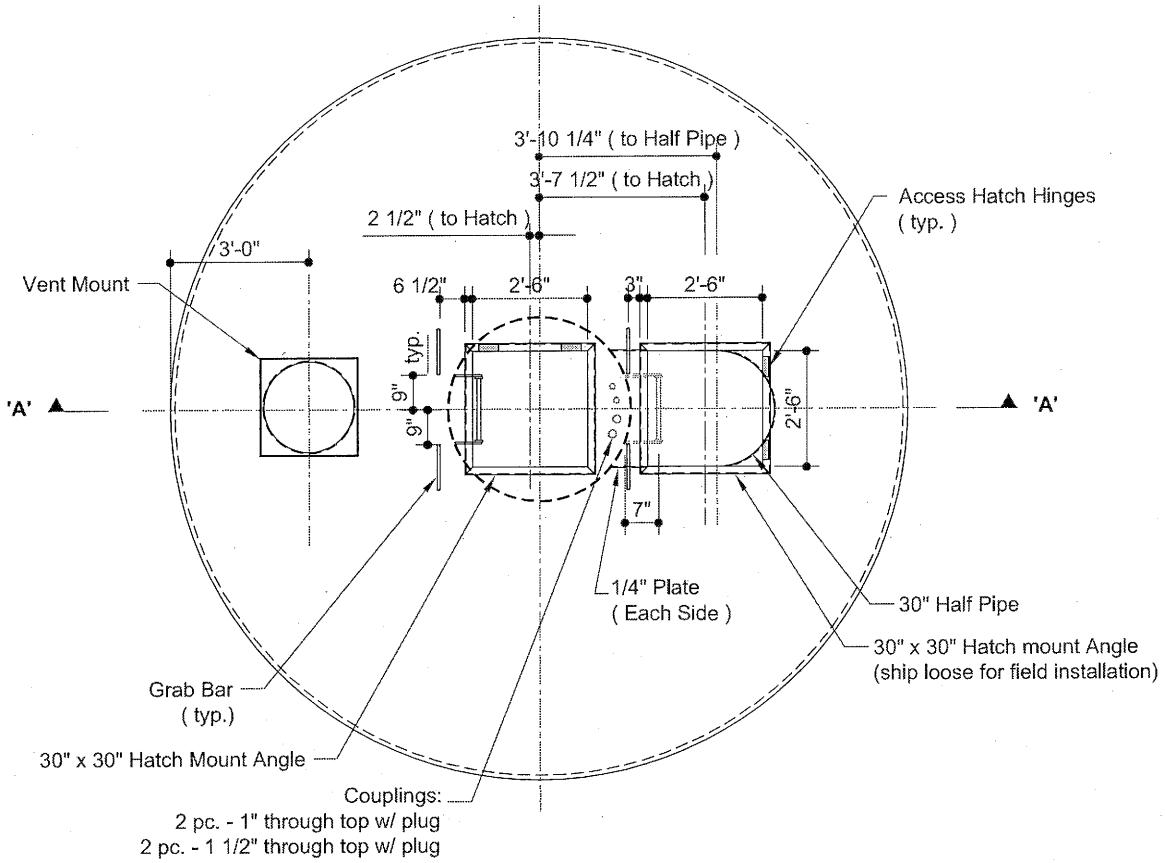

Plan

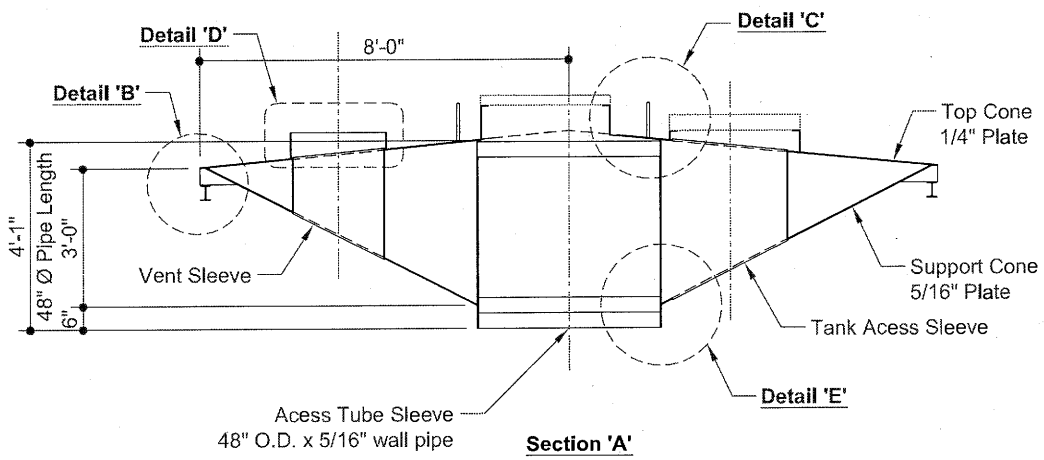

Section 'A'

NOTES:

Material Specification

1. Finish - prepare surface and prime coat per contract specification requirements.

Drawing References

- S15 - A2 - Access Tube Top Platform - Details

STATE OF TEXAS
JOHN E. GRENDZINSKI
87324
LICENSED PROFESSIONAL ENGINEER
10-18-07

Project:
CITY OF ROCKWALL, TEXAS
2.0 MG ELEVATED WATER STORAGE TANK

No.:	Date:	By:	Revision:

TOP PLATFORM PLAN / SECTION

Contractor:

LANDMARK
Landmark Structures I, LP
1665 Harmon Road Fort Worth, Texas, 76177
Tel: (817) 439-8888 Fax: (817) 439-9001

Design:	Dwn:	Job Number:
JEG	VJ	1190
Chk:	Alloc:	Dwg. Number:
DK		S15 - A1
Issued Date:	Scale:	
06 / 07	N.T.S.	

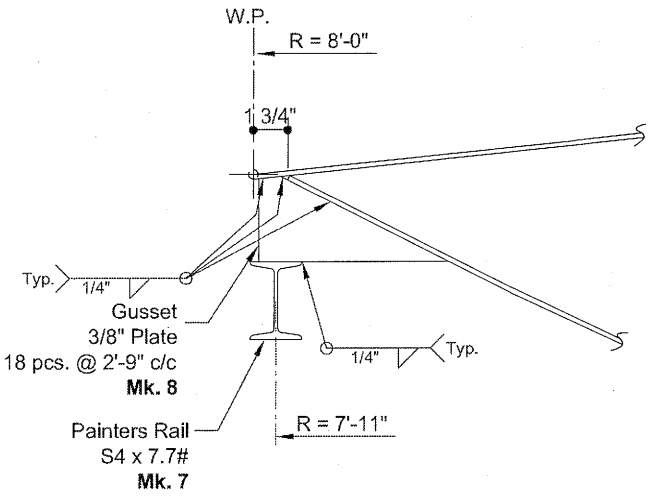

Detail 'B'

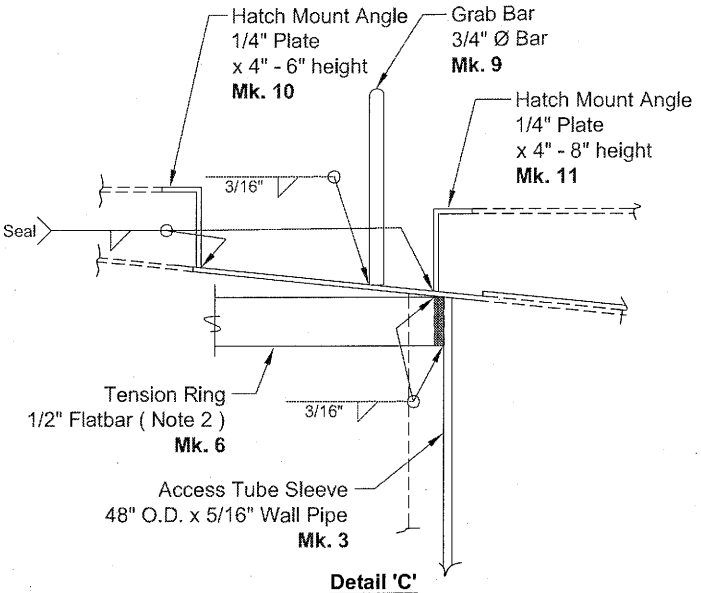

Detail 'C'

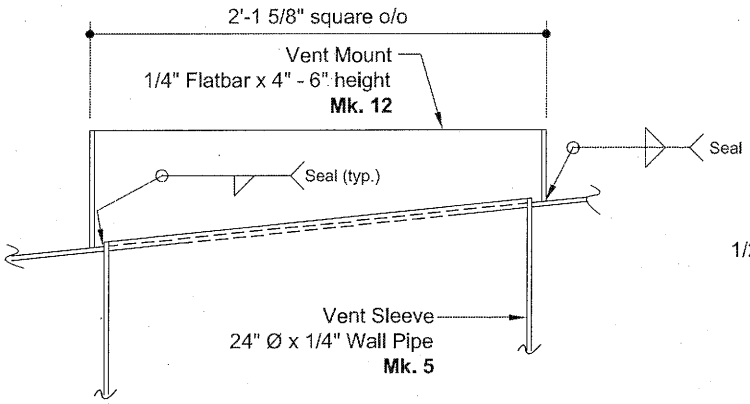

Detail 'D'

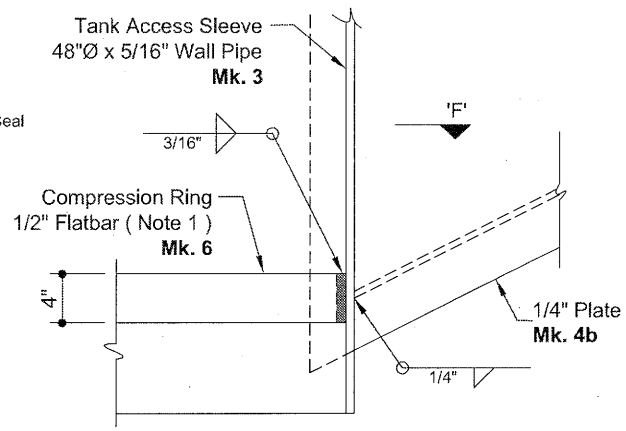

Detail 'E'

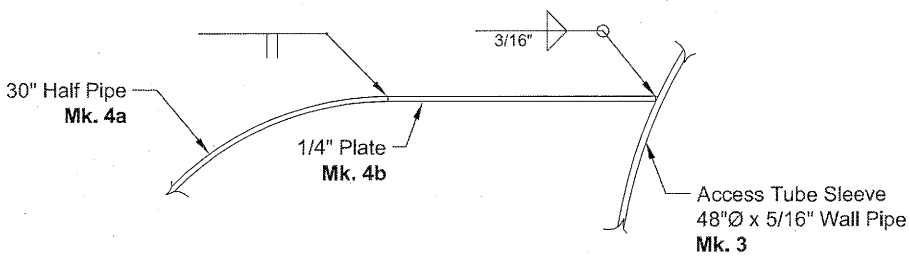

Detail 'F'

NOTES :

1. Locate mid height of compression ring at intersection of support cone and pipe.
2. Bevel corner of compression ring to clear access tube fillet weld.

Material Specification (unless otherwise noted)
Pipe - ASTM A53 Type E or S, Grade B or ASTM A139, Grade B
Plate - ASTM A36 or equal.

STATE OF TEXAS
JOHN E. GRENDZINSKI
87324
LICENSED
PROFESSIONAL ENGINEER
10-18-07

Project:
CITY OF ROCKWALL, TEXAS
2.0 MG ELEVATED WATER STORAGE TANK

No.	Date:	By:	Revision:

TOP PLATFORM DETAILS

Contractor:
LANDMARK
Landmark Structures I, LP
1665 Harmon Road Fort Worth, Texas, 76177
Tel: (817) 439-8888 Fax: (817) 439-9001

Design:	Dwn:	Job Number:
JEG	VJ	1190
Chk: DK	Alloc:	Dwg. Number: S15 - A2
Issued Date: 06 / 07	Scale: N.T.S.	

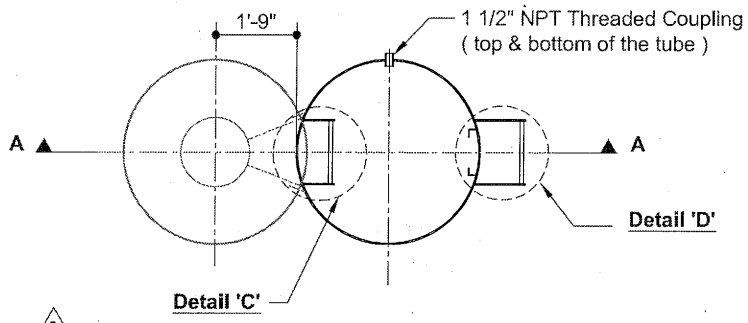

Plan

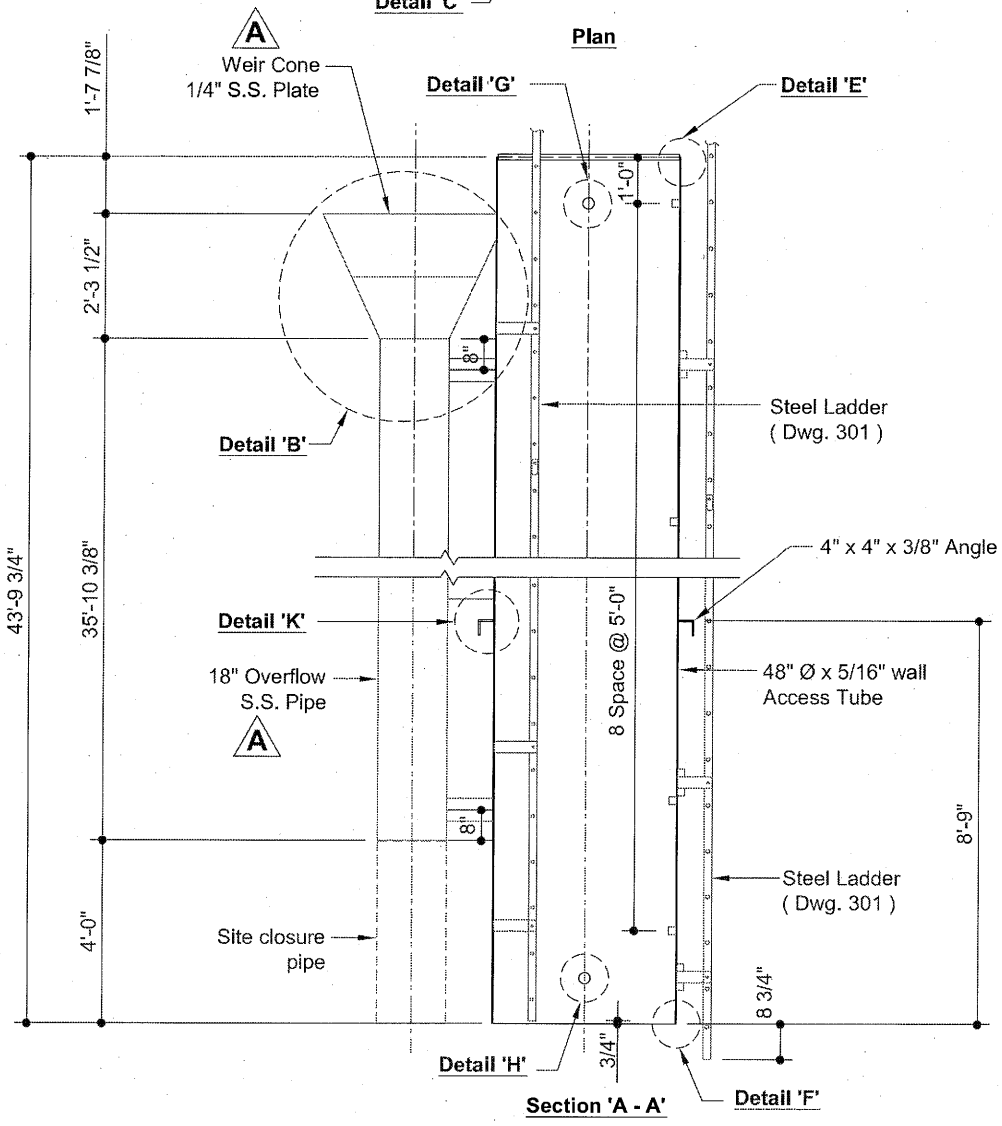

Section 'A - A'

NOTES:

1. Finish - prepare surface and coat per contract specification requirements.

Drawing References

S15 - B2 - Access Tube - Details
S15 - B3 - Access Tube - Details

STATE OF TEXAS
JOHN E. GRENDZINSKI
87324
LICENSED PROFESSIONAL ENGINEER
12-05-07

Project:
CITY OF ROCKWALL, TEXAS
2.0 MG ELEVATED WATER STORAGE TANK

No.:	Date:	By:	Revision:
A	08/Nov/07	KKC	Changed Overflow to Stainless Steel

ACCESS TUBE LAYOUT

Contractor:

LANDMARK
Landmark Structures I, LP
1665 Harmon Road Fort Worth, Texas, 76177
Tel: (817) 439-8888 Fax: (817) 439-9001

Design:	Dwn:	Job Number:
JEG	VP	1190
Chk:	Alloc:	
DK		Dwg. Number:
Issued Date:	Scale:	S15 - B1
06 / 07	N.T.S.	

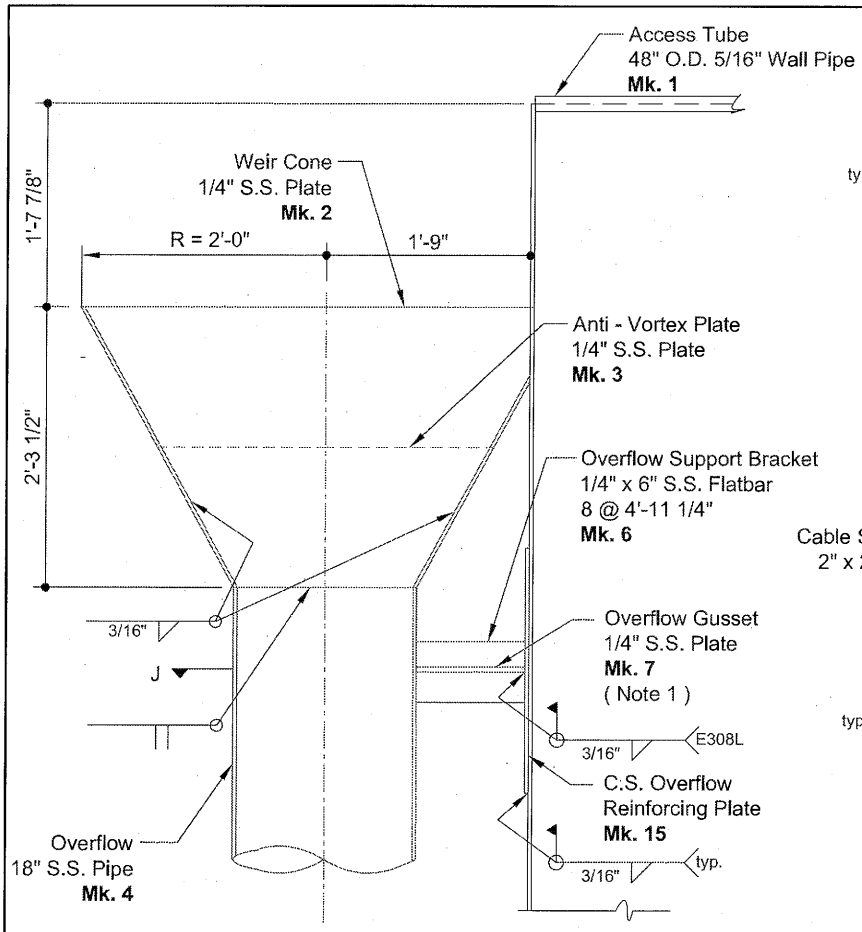

Detail 'B'

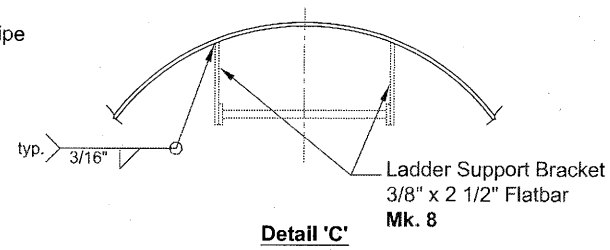

Detail 'C'

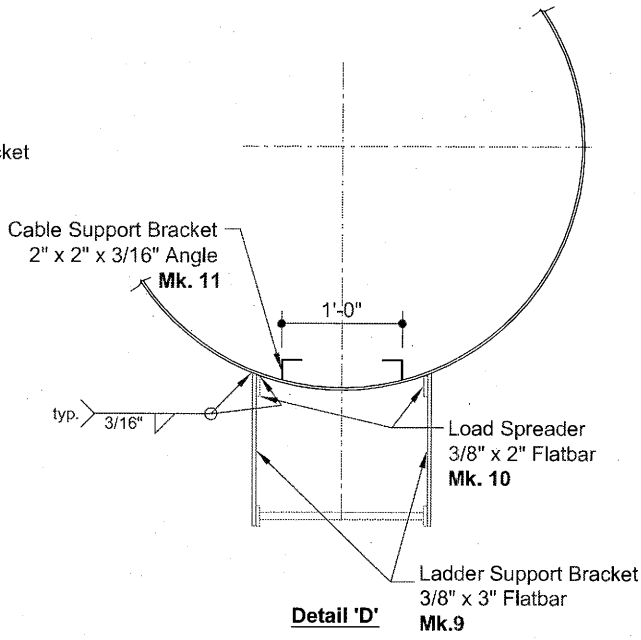

Detail 'D'

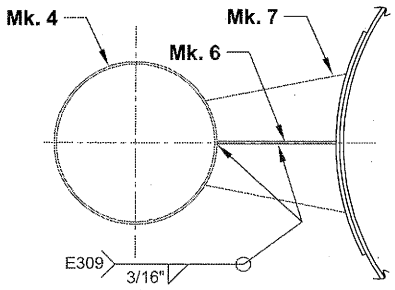

Section 'J'

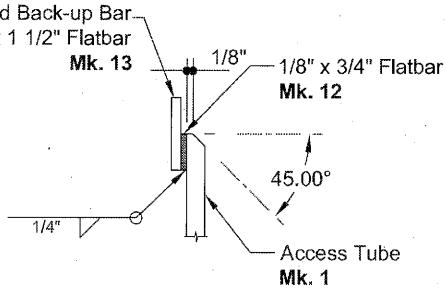

Detail 'E'

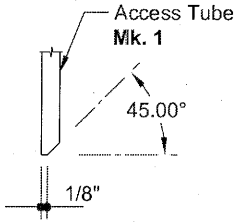

Detail 'F'

NOTES :

1. Provide extra gusset (Mk. 7) at top bracket and second bracket from bottom of overflow.

Material Specifications

Access Tube Pipe - ASTM A53 Type E or S, Grade B or ASTM A139 Grade B.
Overflow Pipe - ASTM A240 Type 304L (I.D.)
Overflow Pipe Brackets - ASTM A240 Type 304L
Reinforcing Plate - ASTM A36 or equal.

STATE OF TEXAS
JOHN E. GRENDZINSKI
87324
LICENSED PROFESSIONAL ENGINEER
12-05-07

Project:
CITY OF ROCKWALL, TEXAS
2.0 MG ELEVATED WATER STORAGE TANK

No.:	Date:	By:	Revision:
A	08/Nov/07	KKC	Changed Overflow to Stainless Steel

ACCESS TUBE DETAILS

Contractor:
LANDMARK
Landmark Structures I, LP
1665 Harmon Road Fort Worth, Texas, 76177
Tel: (817) 439-8888 Fax: (817) 439-9001

Design:	Dwn:	Job Number:
JEG	VP	1190
Chk:	Alloc:	Dwg. Number:
DK		S15 - B2
Issued Date: 06 / 07	Scale: N.T.S.	

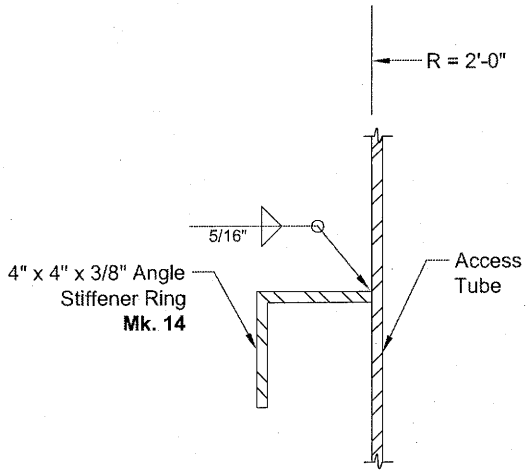

Detail 'K'

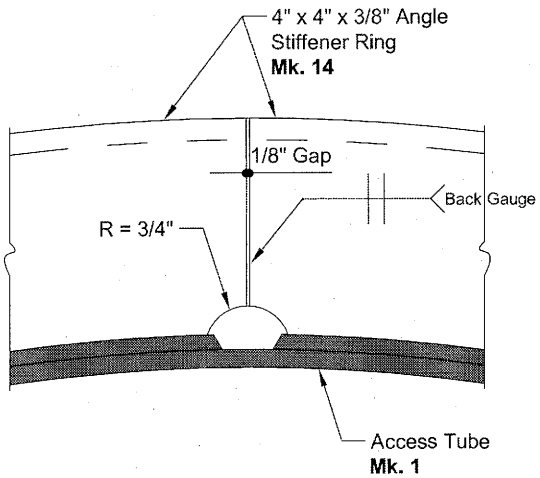

Joint Detail
Stiffener Ring

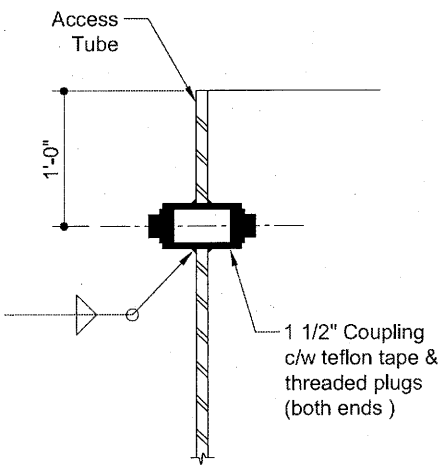

Detail 'G'

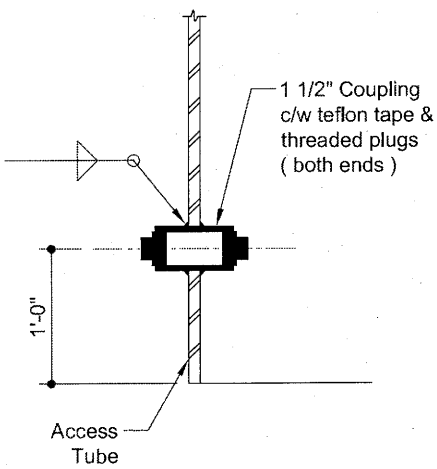

Detail 'H'

STATE OF TEXAS
JOHN E. GRENDZINSKI
87324
LICENSED
PROFESSIONAL ENGINEER
10-18-07

Project:
CITY OF ROCKWALL, TEXAS
2.0 MG ELEVATED WATER STORAGE TANK

No.:	Date:	By:	Revision:

ACCESS TUBE DETAILS

Contractor:

LANDMARK
Landmark Structures I, LP
1665 Harmon Road Fort Worth, Texas, 76177
Tel: (817) 439-8888 Fax: (817) 439-9001

Design:	Dwn:	Job Number:
JEG	VP	1190
Chk:	Alloc:	Dwg. Number:
DK		S15 - B3
Issued Date:	Scale:	
06 / 07	N.T.S.	

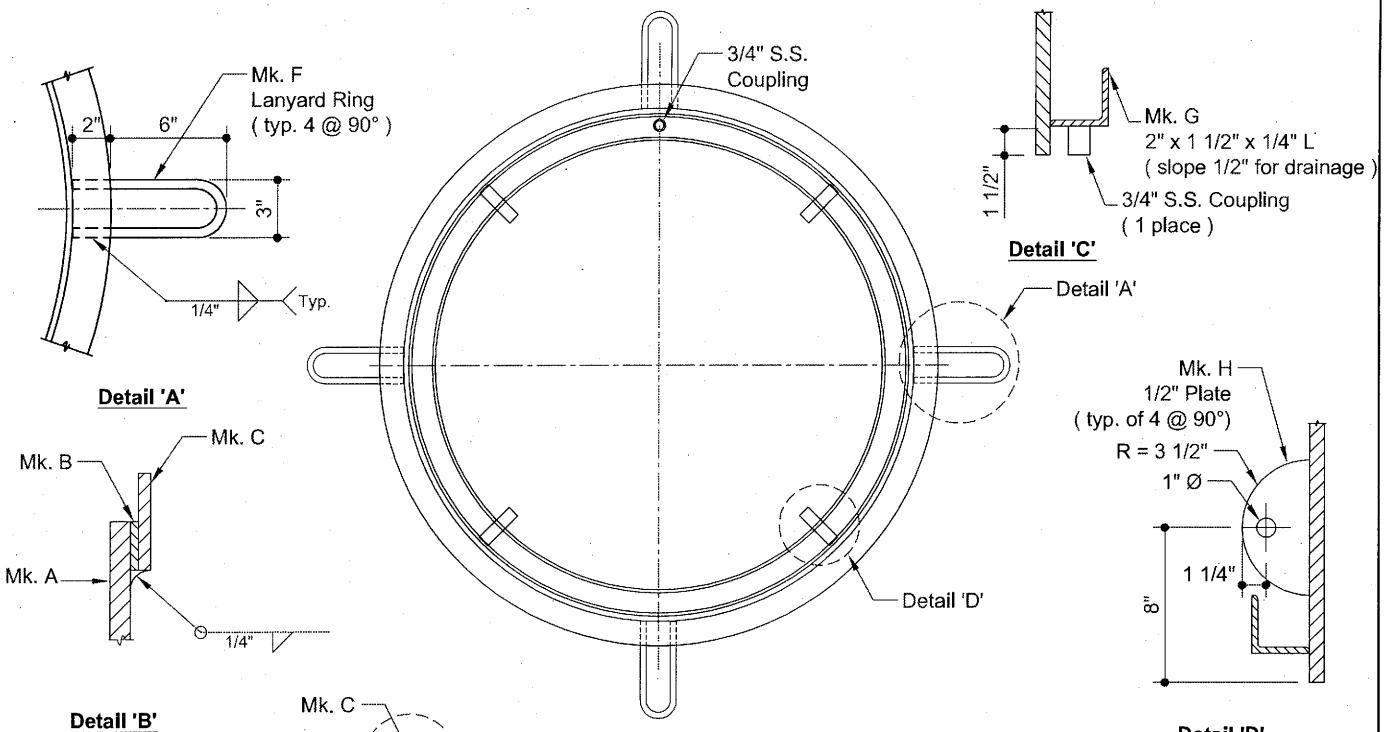

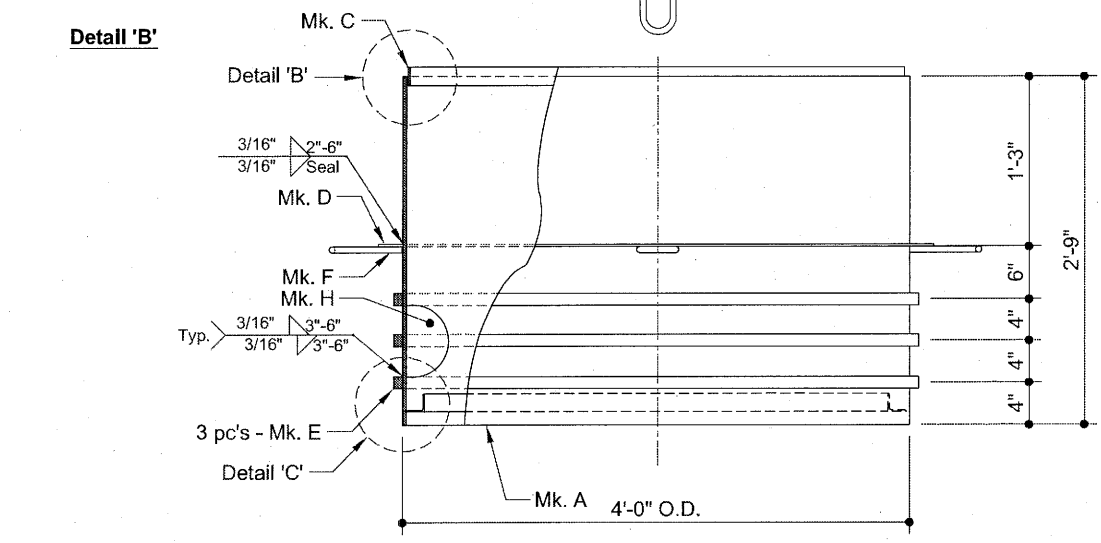

Section

NOTES :

Components

Mk. A - 1 pc. 48" diameter x 5/16" wall x 2'-9" long pipe - ASTM A139 Gr.B.
Mk. B - 1 pc. 1/8" x 3/4" flatbar x 12'-6" long.
Mk. C - 1 pc. 3/16" x 1 1/2" flatbar x 12'-6" long. Roll easy way to 3'-11-1/8" outside diameter.
Mk. D - 2 pc. 3/16" x 2" flatbar x 13'-1" long. Roll hard way to 4'-4" outside diameter. (Ship 1 pc. loose)
Mk. E - 3 pc. 3/4" x 1" flatbar x 13'-3" long. Roll easy way to 4'-1-1/2" outside diameter.
Mk. F - 4 pc. 1/2" Ø round bar x 1'-5" long.
Mk. G - 1 pc. 2" x 1 1/2" x 1/4" angle x 12'-4-3/8" long. Roll to 3'-11-1/4" outside diameter. (2" leg out)
Mk. H - 4 pcs. 1/2" plate c/w 1" Ø hole.

Material

ASTM A36 or equal (unless otherwise noted)

Finish

Field coat per specification.

STATE OF TEXAS
JOHN E. GRENDZINSKI
87324
LICENSED PROFESSIONAL ENGINEER
10-18-07

Project:
CITY OF ROCKWALL, TEXAS
2.0 MG ELEVATED WATER STORAGE TANK

No.:	Date:	By:	Revision:

ACCESS TUBE FLOOR SLEEVE

Contractor:
LANDMARK
Landmark Structures I, LP
1665 Harmon Road Fort Worth, Texas, 76177
Tel: (817) 439-8888 Fax: (817) 439-9001

Design:	Dwn:	Job Number:
JEG	DK	1190
Chk: JEG	Alloc:	Dwg. Number: S15 - C
Issued Date: 06 / 07	Scale: N.T.S.	

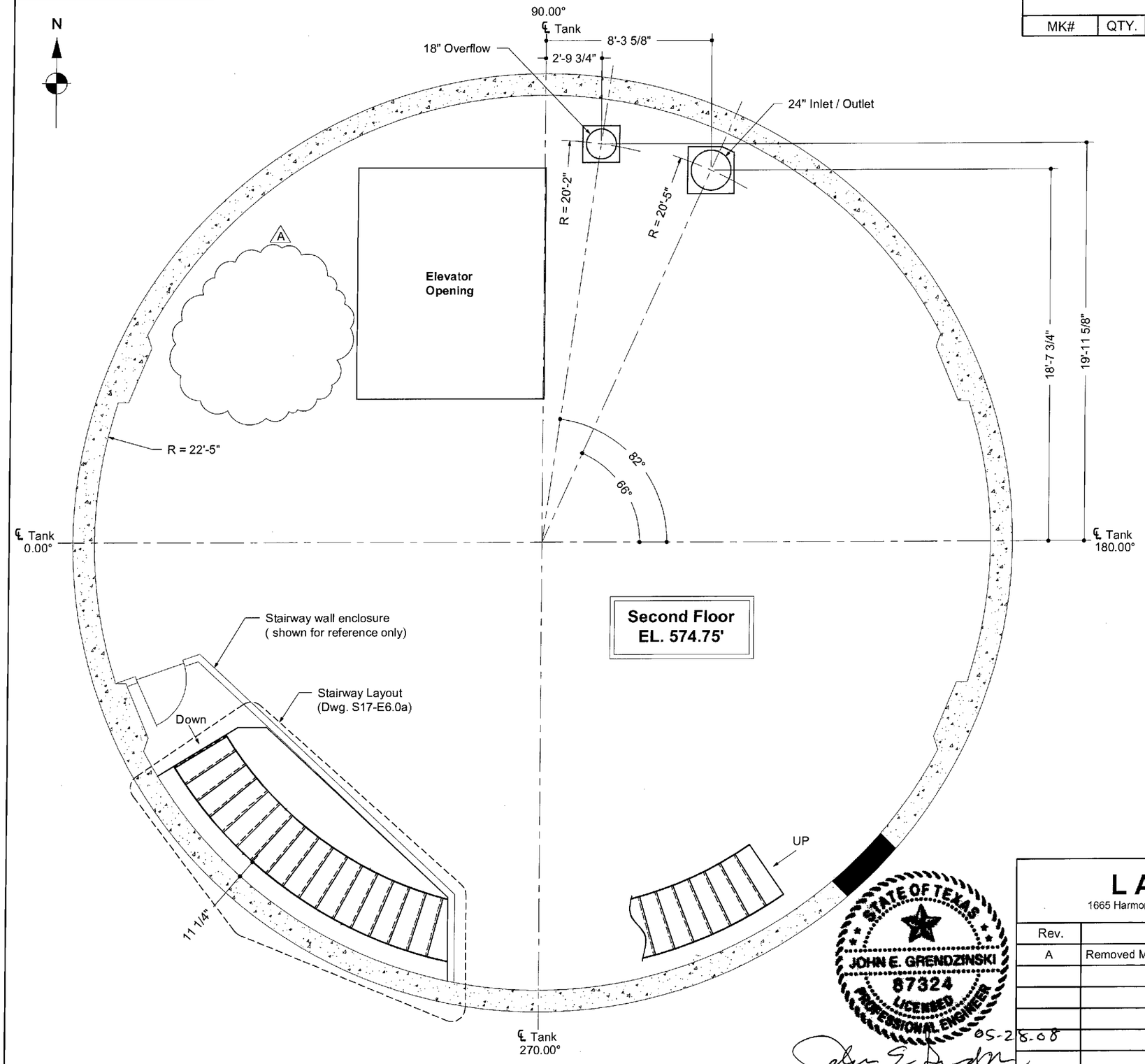

Bill of Material				
MK#	QTY.	Description	Spec.	Ref. Drawing

NOTES:

1. System - Composite concrete slab / steel floor deck. Total slab depth 4 1/2"
   - Simply supported non-composite structural steel beam support.
2. Design Standards - SDI - specification and commentary
   - AISC - allowable stress design.
3. Design Live Load - 125 psf.
4. Material Specification - Refer to Detail drawings.
5. Finish - Galvanize all exposed metal deck framing - ASTM A123
   - Concrete Slab - steel trowel finish.
6. For floor structural framing plan see Dwg. S17-E2.1.

STATE OF TEXAS
JOHN E. GRENDZINSKI
87324
LICENSED
PROFESSIONAL ENGINEER
05-28-08

LANDMARK
1665 Harmon Road, Ft. Worth, TX. 76177 817-439-9002

Rev.	Revision Description	Date
A	Removed Manhole	28 April 08

INTERMEDIATE FLOOR (574.75')
PLAN / GENERAL DESIGN

CITY OF ROCKWALL, TEXAS
2.0 MG ELEVATED WATER STORAGE TANK
(L.S.LP Job No. 1190)

Date 03 Dec 07
Scale: 3/16" = 1'-0" (1:64)
Chk.
Dwn. RAG

S17-E1.1

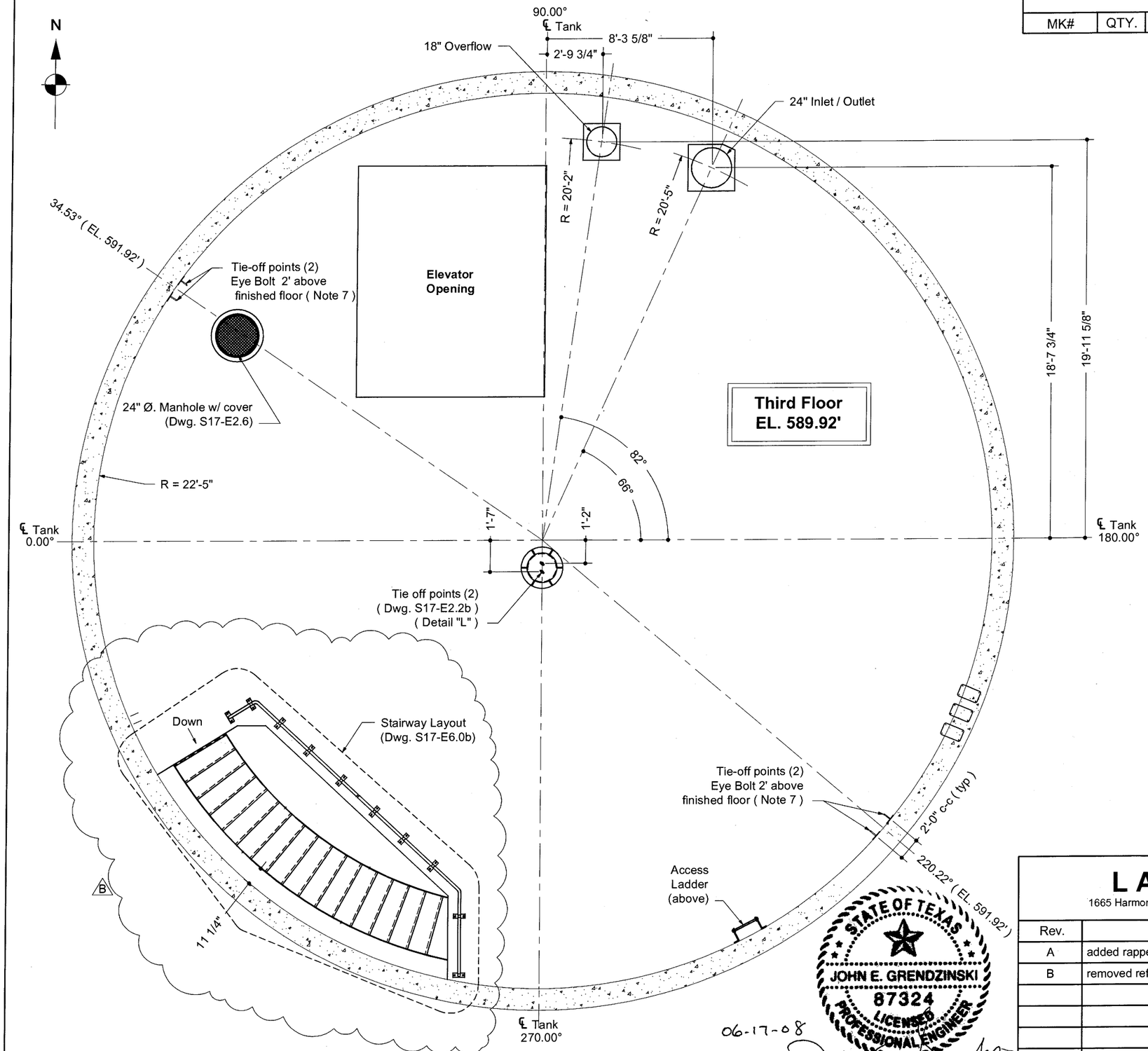

Bill of Material				
MK#	QTY.	Description	Spec.	Ref. Drawing

NOTES:

1. System - Composite concrete slab / steel floor deck. Total slab depth 4 1/2"
   - Simply supported non-composite structural steel beam support.
2. Design Standards - SDI - specification and commentary
   - AISC - allowable stress design.
3. Design Live Load - 125 psf.
4. Material Specification - Refer to Detail drawings.
5. Finish - Galvanize all exposed metal deck framing - ASTM A123
   - Concrete Slab - steel trowel finish.
6. For floor structural framing plan see Dwg. S17-E2.1.
7. For rappelling wall tie-off installation, see Dwg. 343-A2.

STATE OF TEXAS
JOHN E. GRENDZINSKI
87324
LICENSED
PROFESSIONAL ENGINEER

06-17-08

LANDMARK
1665 Harmon Road, Ft. Worth, TX. 76177 817-439-9002

Rev.	Revision Description	Date
A	added rappelling tie-off points	29 april 08
B	removed ref. to wall; added gaurdrail	06 June 08

INTERMEDIATE FLOOR (EL. 589.92')
PLAN / GENERAL DESIGN

CITY OF ROCKWALL, TEXAS
2.0 MG ELEVATED WATER STORAGE TANK
(L.S.LP Job No. 1190)

Date 03 Dec 07
Scale: 3/16" = 1'-0" (1:64)
Chk.
Dwn. RAG

S17-E1.2

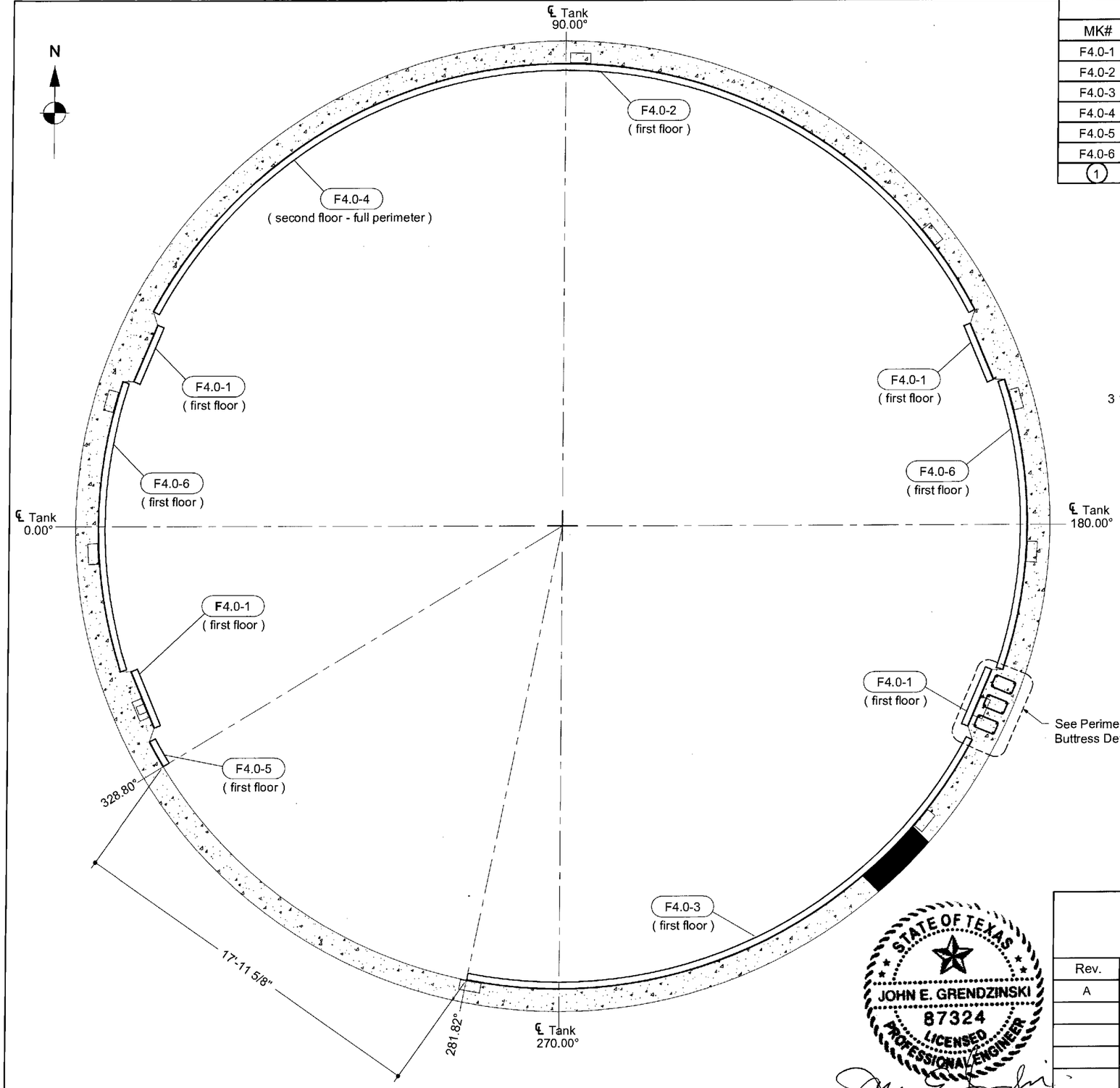

Bill of Material				
MK#	QTY.	Description	Spec.	Ref. Drawing
F4.0-1	4	Perimeter Angle - Buttress (L4 x 3 x 1/4")	A36	S17-F4.0
F4.0-2	1	Perimeter Angle (L4 x 3 x 1/4")	A36	S17-F4.0
F4.0-3	1	Perimeter Angle (L4 x 3 x 1/4")	A36	S17-F4.0
F4.0-4	1	Perimeter Angle (L4 x 3 x 1/4")	A36	S17-F4.0
F4.0-5	1	Perimeter Angle (L4 x 3 x 1/4")	A36	S17-F4.0
F4.0-6	2	Perimeter Angle - Truck Door (L4 x 3 x 1/4")	A36	S17-F4.0
(1)	250	1/2 x 4 1/2" lg. Hilti KB3 (approx. 38 extra)		S17-F4.0

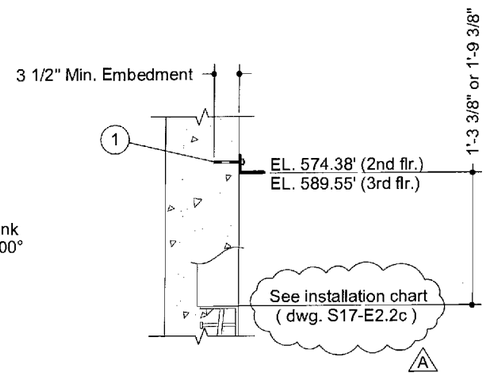

Section 'A'

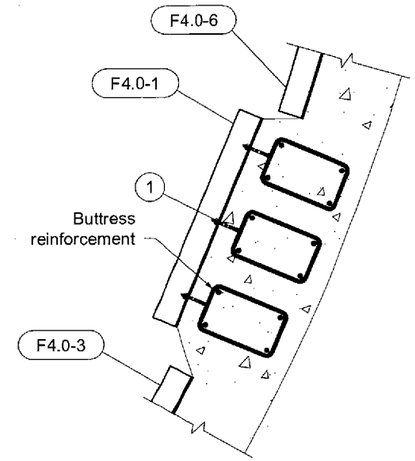

Perimeter Angle
Buttress Detail

STATE OF TEXAS
JOHN E. GRENDZINSKI
87324
LICENSED
PROFESSIONAL ENGINEER
05-20-08

LANDMARK 1665 Harmon Road, Ft. Worth, TX. 76177 817-439-9002			INTERMEDIATE FLOOR PERIMETER ANGLE LAYOUT	
Rev.	Revision Description	Date	CITY OF ROCKWALL, TEXAS 2.0 MG ELEVATED WATER STORAGE TANK (L.S.LP Job No. 1190)	
A	elevation notes for per angle	29 April 08		
			Date 03 Dec 07	S17-E2.0
			Scale: As Noted	
			Chk.	
			Dwn. RAG	

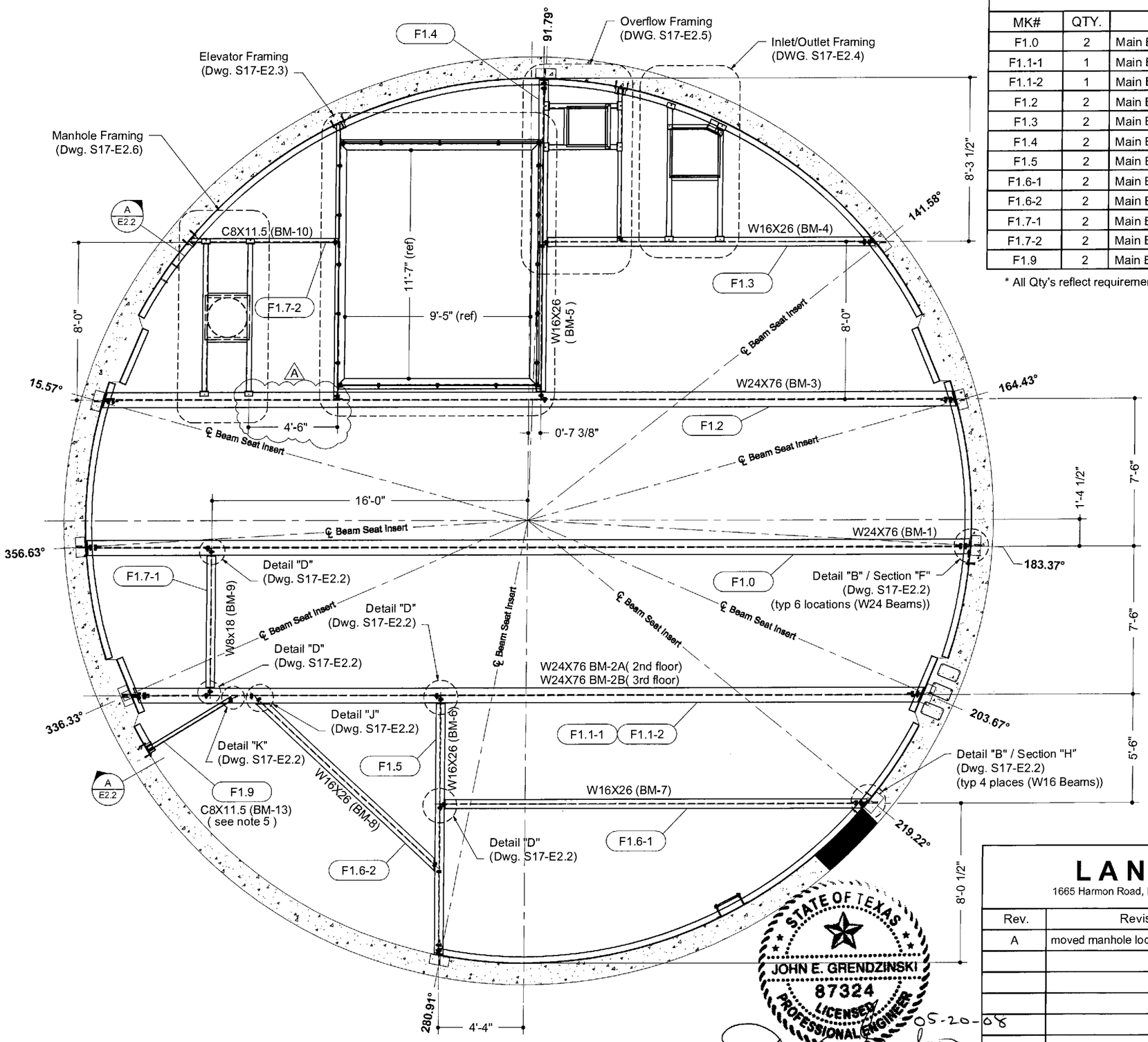

Bill of Material				
MK#	QTY.	Description	Spec.	Ref. Drawing
F1.0	2	Main Beam BM-1 (W24X76)	A992	S17-F1.0
F1.1-1	1	Main Beam BM-2A (W24X76)	A992	S17-F1.1
F1.1-2	1	Main Beam BM-2B (W24X76)	A992	S17-F1.1
F1.2	2	Main Beam BM-3 (W24X76)	A992	S17-F1.2
F1.3	2	Main Beam BM-4 (W16X26)	A992	S17-F1.3
F1.4	2	Main Beam BM-5 (W16X26)	A992	S17-F1.4
F1.5	2	Main Beam BM-6 (W16X26)	A992	S17-1.5
F1.6-1	2	Main Beam BM-7 (W16X26)	A992	S17-F1.6
F1.6-2	2	Main Beam BM-8 (W16X26)	A992	S17-F1.6
F1.7-1	2	Main Beam BM-9 (W8X18)	A992	S17-F1.7
F1.7-2	2	Main Beam BM-10 (C8X11.5)	A36	S17-F1.7
F1.9	2	Main Beam BM-13 (C8X11.5)	A36	S17-F1.9

* All Qty's reflect requirements for (2) intermediate floors.

NOTES:

1. Angles shown are to the centerline of WP1 of inserts, (Dwg. S17-E2.2)
2. Material Specifications:
   Main Beams - ASTM A992
   Other Structural Sections - ASTM A36
   Fasteners - ASTM A325
   Welding Electrode - E70XX
3. Bolted Joints are type "Snug-Tightened" per "AISC Specifications for Structural Joints using ASTM A325 or A490 Bolts."
4. Finish - Galvanize - Structural Steel ASTM A123
   - Hardware - ASTM A153
5. See S17-F6.0a/b for erection notes. BM-13 is to be left loose untill stairway is fit.

STATE OF TEXAS
JOHN E. GRENDZINSKI
87324
LICENSED
PROFESSIONAL ENGINEER
05-20-08

LANDMARK
1665 Harmon Road, Ft. Worth, TX. 76177 817-439-9002

Rev.	Revision Description	Date
A	moved manhole location	29 April 08

INTERMEDIATE FLOOR STRUCTURAL FRAMING PLAN

CITY OF ROCKWALL, TEXAS
2.0 MG ELEVATED WATER STORAGE TANK
(L.S.LP Job No. 1190)

Date 13 Dec 07
Scale: 3/16" = 1'-0" (1:64)
Chk.
Dwn. RAG

S17-E2.1

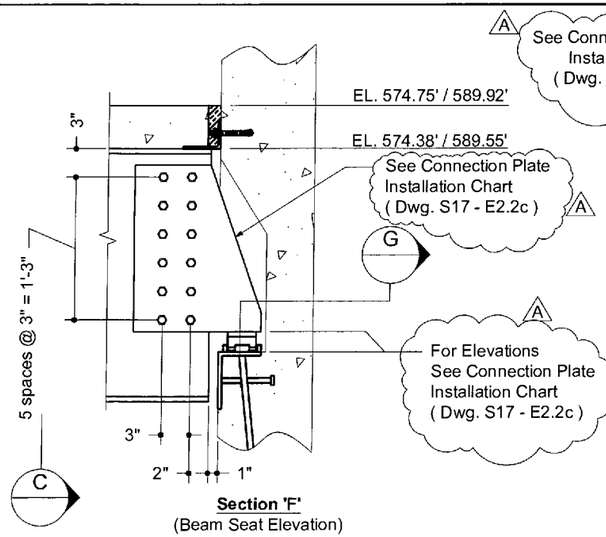

Section 'F'
(Beam Seat Elevation)
(6 locations / floor)

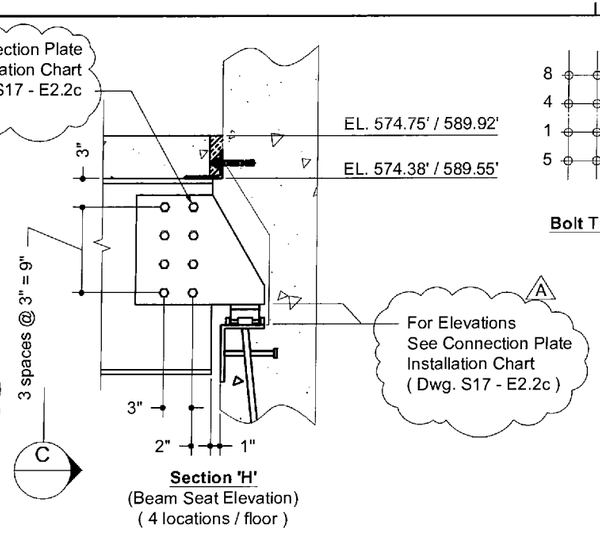

Section 'H'
(Beam Seat Elevation)
(4 locations / floor)

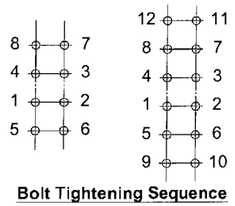

Bolt Tightening Sequence

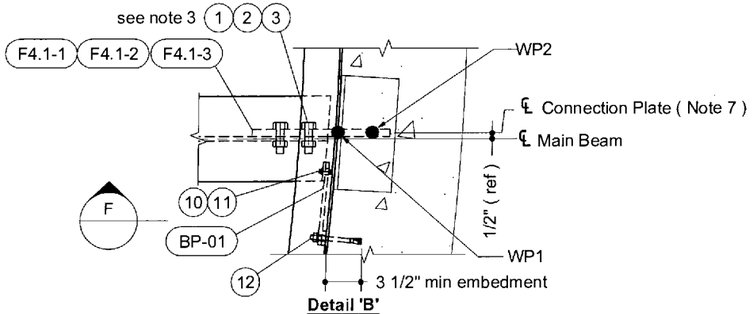

Detail 'B'
(10 locations / floor)
(S17-E2.1)

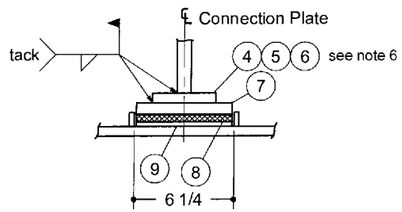

Section 'G'
(N.T.S.)

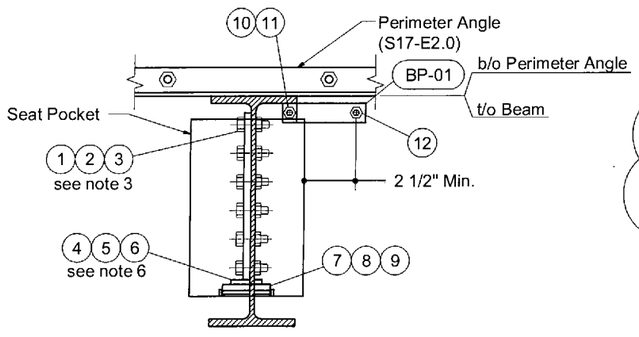

Section 'C'
(Typical)

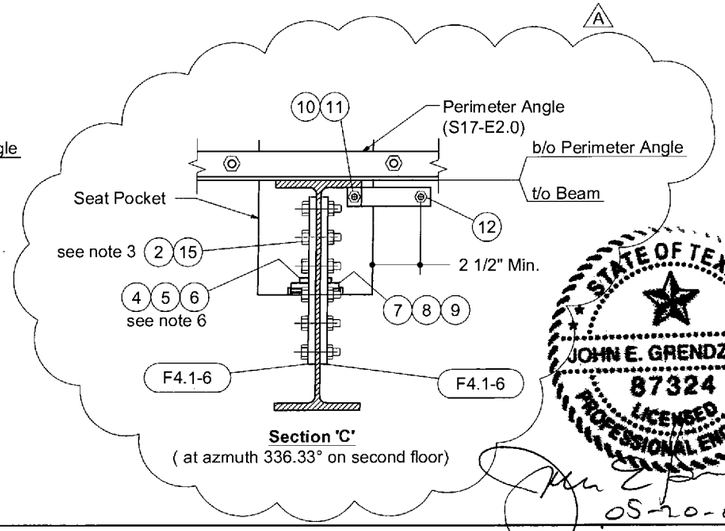

Section 'C'
(at azmuth 336.33° on second floor)

STATE OF TEXAS
JOHN E. GRENDZINSKI
87324
LICENSED
PROFESSIONAL ENGINEER
05-20-08

Bill of Material

MK#	QTY.	Description	Spec.	Ref. Drawing
BS-03	8	Beam Seat BS-03	A36	STD-BS-03
BP-01	20	Brace plate BP-01	A36	STD-BP-01
F1.6-4	4	Connection Bracket	A36	S17-F1.6
F1.6-6	4	Connection Bracket	A36	S17-F1.6
F4.1-1	10	Main Beam Connection Plate (14 1/2" wide)	A36	S17-F4.1
F4.1-2	4	Main Beam Connection Plate (14 1/2" wide)	A36	S17-F4.1
F4.1-3	3	Main Beam Connection Plate (16" wide)	A36	S17-F4.1
F4.1-4	12	Beam Connection Angle	A36	S17-F4.1
A F4.1-6	2	Main Beam Connection Plate (14 1/2" wide)	A36	S17-F4.1
A F4.1-7	1	Main Beam Connection Plate (14 1/2" wide)	A36	S17-F4.1
A F4.1-8	1	Main Beam Connection Plate (16" wide)	A36	S17-F4.1
(1)	216	Bolt UNC 3/4" Ø x 2" lg. (20 extra)	A325	
(2)	370	Nut UNC 3/4" Heavy Hex (30 extra)	A563-DH	
(3)	169	Bolt UNC 3/4" Ø x 2 1/2" lg. (25 extra)	A325	
(4)	20	PL 1/2 x 3 x 5" lg. (Shims)	A36	
(5)	40	PL 1/4 x 3 x 5" lg. (Shims)	A36	
(6)	20	PL 1/8 x 3 x 5" lg. (Shims)	A36	
A (7)	45	PL 1 x 5 x 5" lg. (Bearing Plate)	A36	
(8)	20	3/8" x 5 x 5" lg. Cotton Duck Bearing Pad	AASHTO 2.10.3 (L)	
(9)	20	PL 1/8 x 5 x 5" lg. (Leveling Plate)	A36	
(10)	20	Bolt UNC 1/2" x 1 1/2" lg.	A325	
(11)	20	Nut UNC 1/2" Heavy Hex	A563-DH	
(12)	20	1/2" x 4 1/2" Hilti KB3		
(13)	8	#12 TEK screw w/ #5 point x 1 1/2" long		
(14)	40	5/8 x 6" lg. Hilti KB3 (8 extra)		
A (15)	12	Bolt UNC 3/4" x 3 1/4" lg.	A325	

* All Qty's reflect requirements for (2) intermediate floors.

NOTES:

1-4. See Dwg. S17-E2.1. A
5. Connection plates (items F4.1-1,2,3,6,7,8) to be bolted on the side of beam nearest tank center.
6 . Use as required, center shims on radial line regardless of beam orientation.
Shim Beam up to bottom of Perimeter angle.
7. Attach using self tapping screws (13) thru 1/4" pilot holes. Alternative attachment field weld as shown.
8. All welding to be done with E70XX electrode.

Connection Installation Procedure:

A. Set 1/8" bearing plate, fabric bearing pad & bearing plate into seat pocket. (items 7-9)
B. Position beam near seat and install connection plate on beam web. Bolt extreme corners (4 bolts) hand tight.(see note 5)
C. Install bolts in all holes and tighten as shown in bolt tightening sequence detail (See note 3).
D. Place beam so connection plate is in line with center of bearing plate (Section 'G')
E. Shim beam to an elevation so that top flange is up against the bottom of perimeter angle leg as shown in section 'C' A (use items 4-7)
F. Brace beam to concrete wall using brace plate (BP-01) as shown in Section 'C'
G. After all framing is in place tack weld connection plate to shim plate, and shim plate to bearing plate. (see Section 'G')

LANDMARK
1665 Harmon Road, Ft. Worth, TX. 76177 817-439-9002

INTERMEDIATE FLOOR STRUCTURAL FRAMING DETAILS

Rev.	Revision Description	Date
A	Add'l info - installation at as-built seat locations	25 April 08

CITY OF ROCKWALL, TEXAS
2.0 MG ELEVATED WATER STORAGE TANK
(L.S.LP Job No. 1190)

Date 14 Dec 07
Scale:
Chk.
Dwn. RAG

S17-E2.2a

Bill of Material				
MK#	QTY.	Description	Spec.	Ref. Drawing

* For Bill of Material see dwg S17-E2.2a

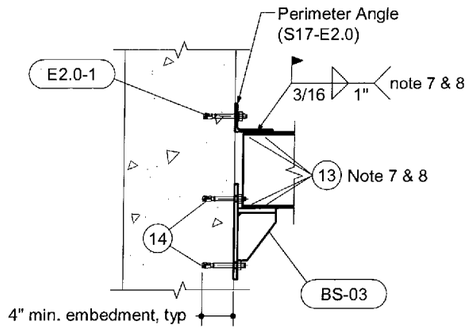

Section 'A'
(4 locations / floor)

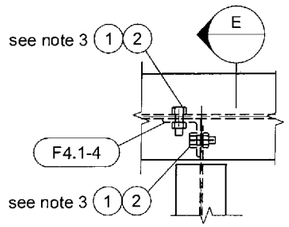

Detail "D"
(6 locations / floor)

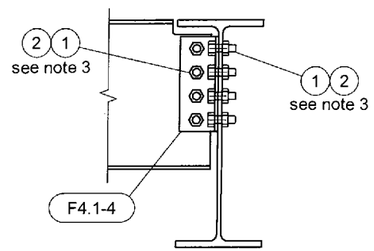

Section 'E'

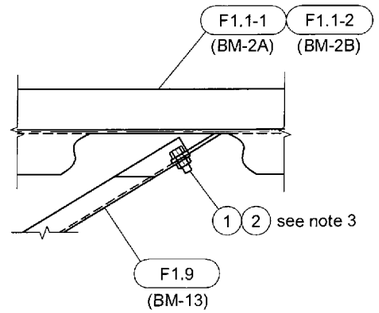

Detail "K"
(1 location / floor)

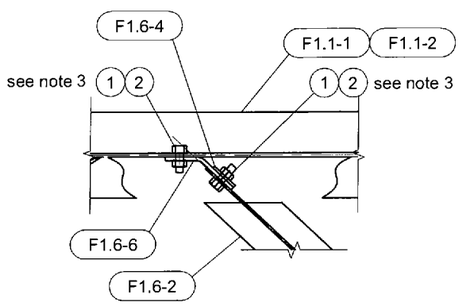

Detail "J"
(2 locations / floor)

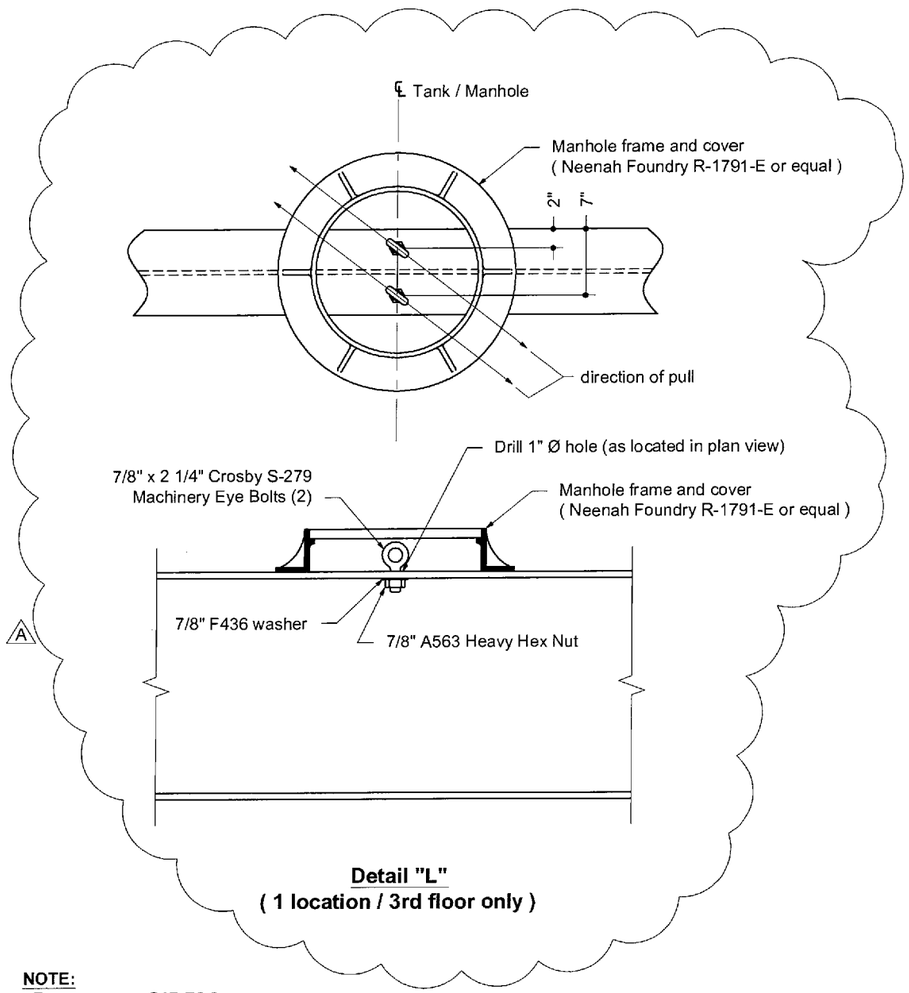

Detail "L"
(1 location / 3rd floor only)

NOTE:
- For notes see S17-E2.2a

INSTALLATION NOTE:
- Prior to concreting, manhole shall be secured in place. (A)

STATE OF TEXAS
JOHN E. GRENDZINSKI
87324
LICENSED
PROFESSIONAL ENGINEER
05-28-08

LANDMARK 1665 Harmon Road, Ft. Worth, TX. 76177 817-439-9002			INTERMEDIATE FLOOR STRUCTURAL FRAMING DETAILS	
Rev.	Revision Description	Date	CITY OF ROCKWALL, TEXAS 2.0 MG ELEVATED WATER STORAGE TANK (L.S.LP Job No. 1190)	
A	added detail "L"	21 May 08		
			Date 14 Dec 07	S17-E2.2b
			Scale:	
			Chk.	
			Dwn. RAG	

Bill of Material				
MK#	QTY.	Description	Spec.	Ref. Drawing

Connection Plate Installation Chart (second floor)

Azimuth	Beam	Connection Plate	Seat Elevations		Shims Required			
			Theoretical	As - Built	1/2	1/4	1/8	1
15.568	BM-3	F4.1-1	572.60	572.43	1			2
91.791	BM-5	F4.1-2	573.10	572.97				2
141.587	BM-4	F4.1-3	573.10	573.00	1	1		1
164.432	BM-3	F4.1-1	572.60	572.47				2
183.372	BM-1	F4.1-1	572.60	572.48				2
203.673	BM-2	F4.1-1	572.60	572.49	1	1	1	1
219.223	BM-7	F4.1-3	573.10	572.96			1	2
280.914	BM-6	F4.1-2	573.10	572.97				2
336.327	BM-2	(2X) F4.1-6	572.60	573.40	1		1	
356.628	BM-1	F4.1-1	572.60	572.43	1			2

Connection Plate Installation Chart (third floor)

Azimuth	Beam	Connection Plate	Seat Elevations		Shims Required			
			Theoretical	As - Built	1/2	1/4	1/8	1
15.568	BM-3	F4.1-1	587.77	587.70		1	1	1
91.791	BM-5	F4.1-2	588.27	588.19	1			1
141.587	BM-4	F4.1-8	588.27	587.74	1		1	
164.432	BM-3	F4.1-1	587.77	587.78		1	1	
183.372	BM-1	F4.1-1	587.77	587.70		1	1	1
202.935	BM-2	F4.1-1	587.77	587.69	1			1
219.223	BM-7	F4.1-3	588.27	588.22			1	1
280.914	BM-6	F4.1-2	588.27	588.23				1
337.065	BM-2	F4.1-6	587.77	587.70		1	1	1
356.628	BM-1	F4.1-7	587.77	588.01	1		1	

STATE OF TEXAS
JOHN E. GRENDZINSKI
87324
LICENSED
PROFESSIONAL ENGINEER
05-20-08

LANDMARK
1665 Harmon Road, Ft. Worth, TX. 76177 817-439-9002

Rev.	Revision Description	Date

INTERMEDIATE FLOOR CONNECTION PLATE INSTALLATION CHART

CITY OF ROCKWALL, TEXAS
2.0 MG ELEVATED WATER STORAGE TANK
(L.S.LP Job No. 1190)

Date 25 April 08
Scale:
Chk.
Dwn. RAG

S17-E2.2c

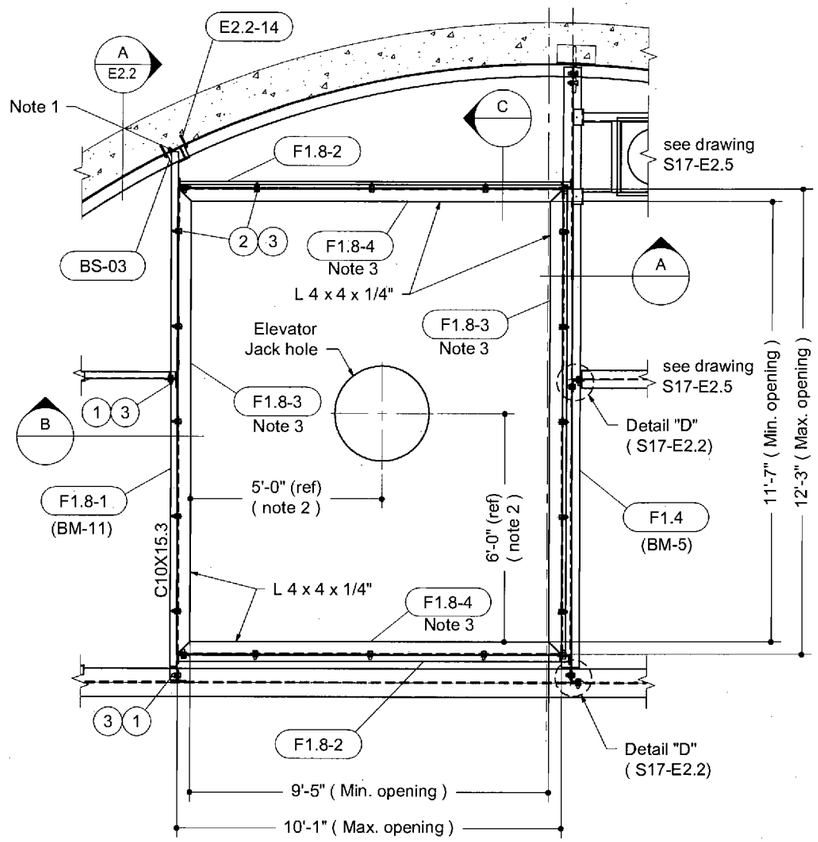

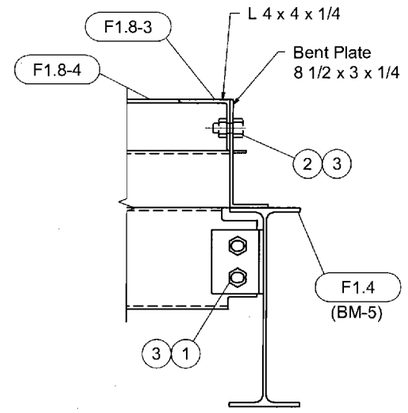

Section 'A'

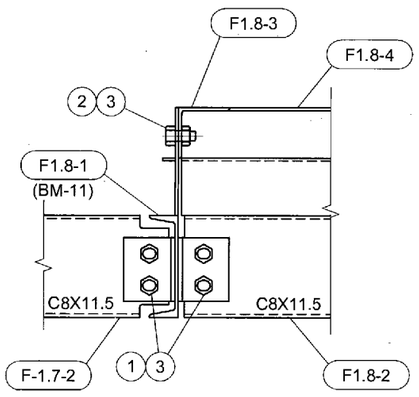

Section 'B'

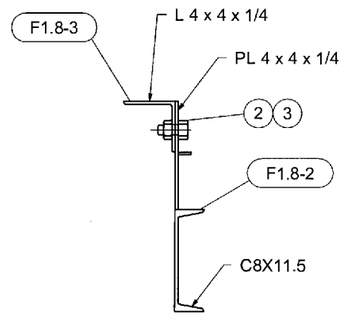

Section 'C'

Bill of Material				
MK#	QTY.	Description	Spec.	Ref. Drawing
F1.8-1	2	Elevator Framing Beam	A36	S17-F1.8
F1.8-2	4	Elevator Framing Beam	A36	S17-F1.8
F1.8-3	4	Elevator Framing Beam	A36	S17-F1.8
F1.8-4	4	Elevator Framing Beam	A36	S17-F1.8
(1)	30	Bolt UNC 3/4 x 2" lg. (6 extra)	A325	
(2)	40	Bolt UNC 3/4 x 1 3/4" lg. (8 extra)	A325	
(3)	70	Nut UNC 3/4" Heavy hex (8 extra)	A563-DH	

* All Qty's reflect requirements for (2) intermediate floors.

NOTES:

1. Assembly fabricated 1 1/2" longer than theoretical. Field cut to fit. Maintain minimum bearing.
2. Confirm reference dimensions from jack hole center are ± 1" before finalizing frame installation.
3. Trim pieces F1.8-3/4 as needed to fit closely to elevator hoistway.

STATE OF TEXAS
JOHN E. GRENDZINSKI
87324
LICENSED
PROFESSIONAL ENGINEER
02-01-08

LANDMARK
1665 Harmon Road, Ft. Worth, TX. 76177 817-439-9002

Rev.	Revision Description	Date

INTERMEDIATE FLOOR ELEVATOR FRAMING

CITY OF ROCKWALL, TEXAS
2.0 MG ELEVATED WATER STORAGE TANK
(L.S.LP Job No. 1190)

Date 05 Dec 07
Scale:
Chk.
Dwn. RAG

S17-E2.3

Bill of Material				
MK#	QTY.	Description	Spec.	Ref. Drawing
F2.0-1	2	24" Inlet / Outlet framing	A36	S17-F2.0
F2.0-2	2	24" Inlet / Outlet Framing (field install)	A36	S17-F2.0
(1)	12	#12 TEK screw w/ #5 point 1 1/2" Long		

* All Qty's reflect requirements for (2) intermediate floors.

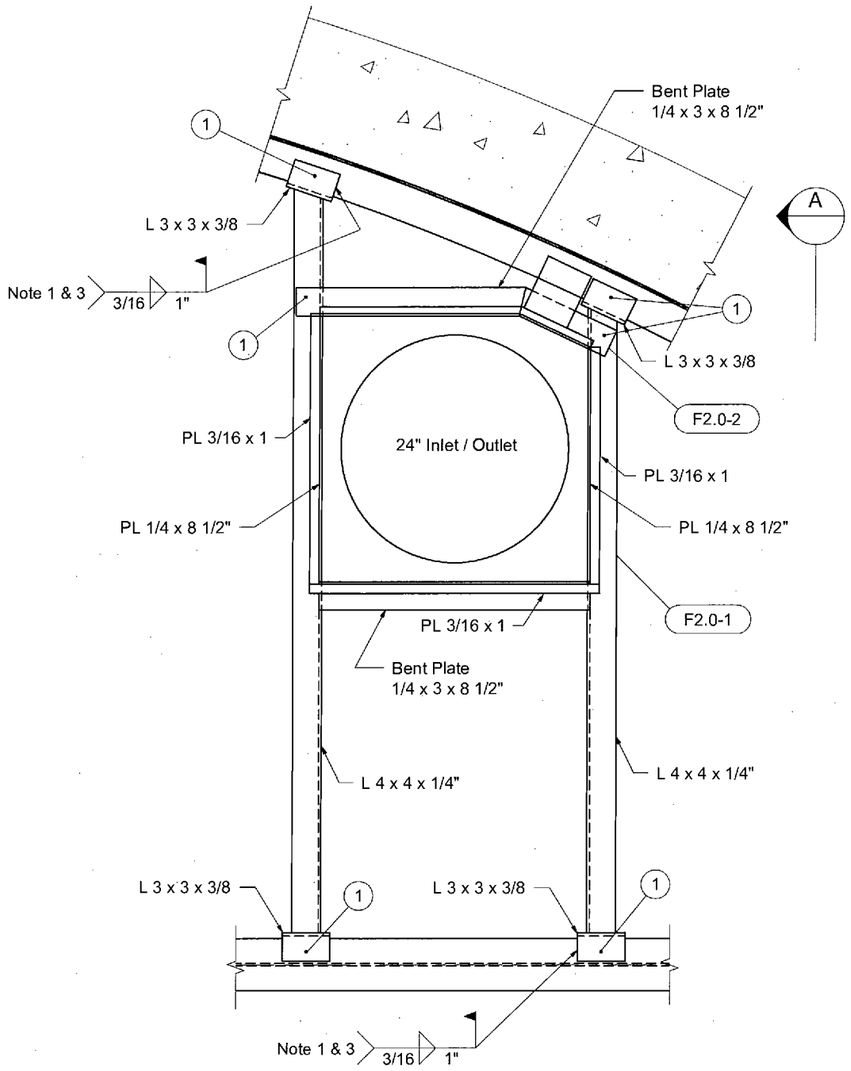

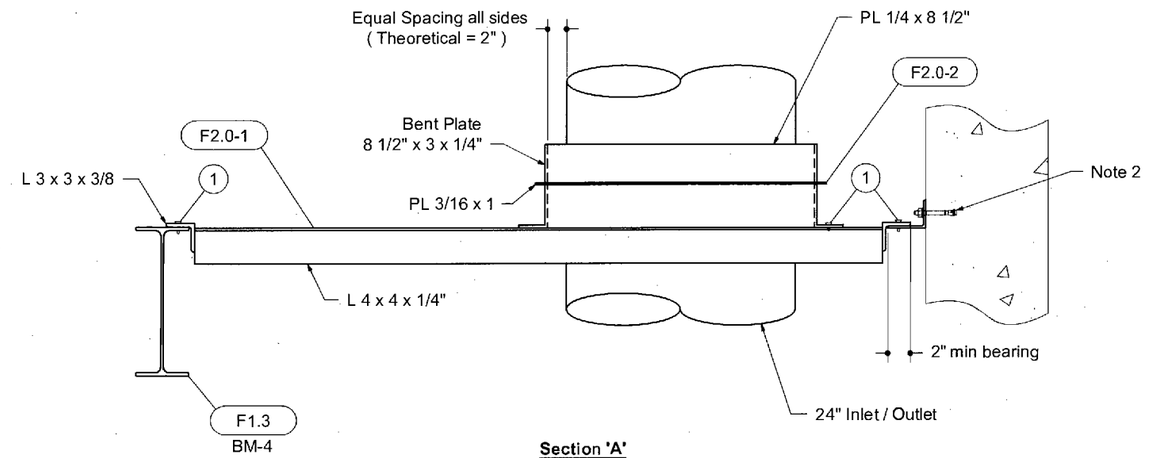

Section 'A'

NOTES:

1. All welding to be done with E70XX electrode.
2. Provide 1 additional Hilti Kwik Bolt II at each framing connection. (min. 3 1/2" Embedment.)
3. Attach using self tapping screws (1) thru 1/4" pilot holes. Alternative attachment field weld as shown.

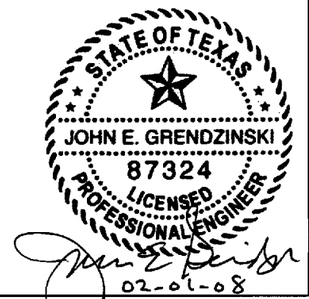

LANDMARK
1665 Harmon Road, Ft. Worth, TX. 76177 817-439-9002

Rev.	Revision Description	Date

INTERMEDIATE FLOOR
INLET / OUTLET FRAMING

CITY OF ROCKWALL, TEXAS
2.0 MG ELEVATED WATER STORAGE TANK
(L.S.LP Job No. 1190)

Date 18 Dec 07
Scale:
Chk.
Dwn. RAG

S17-E2.4

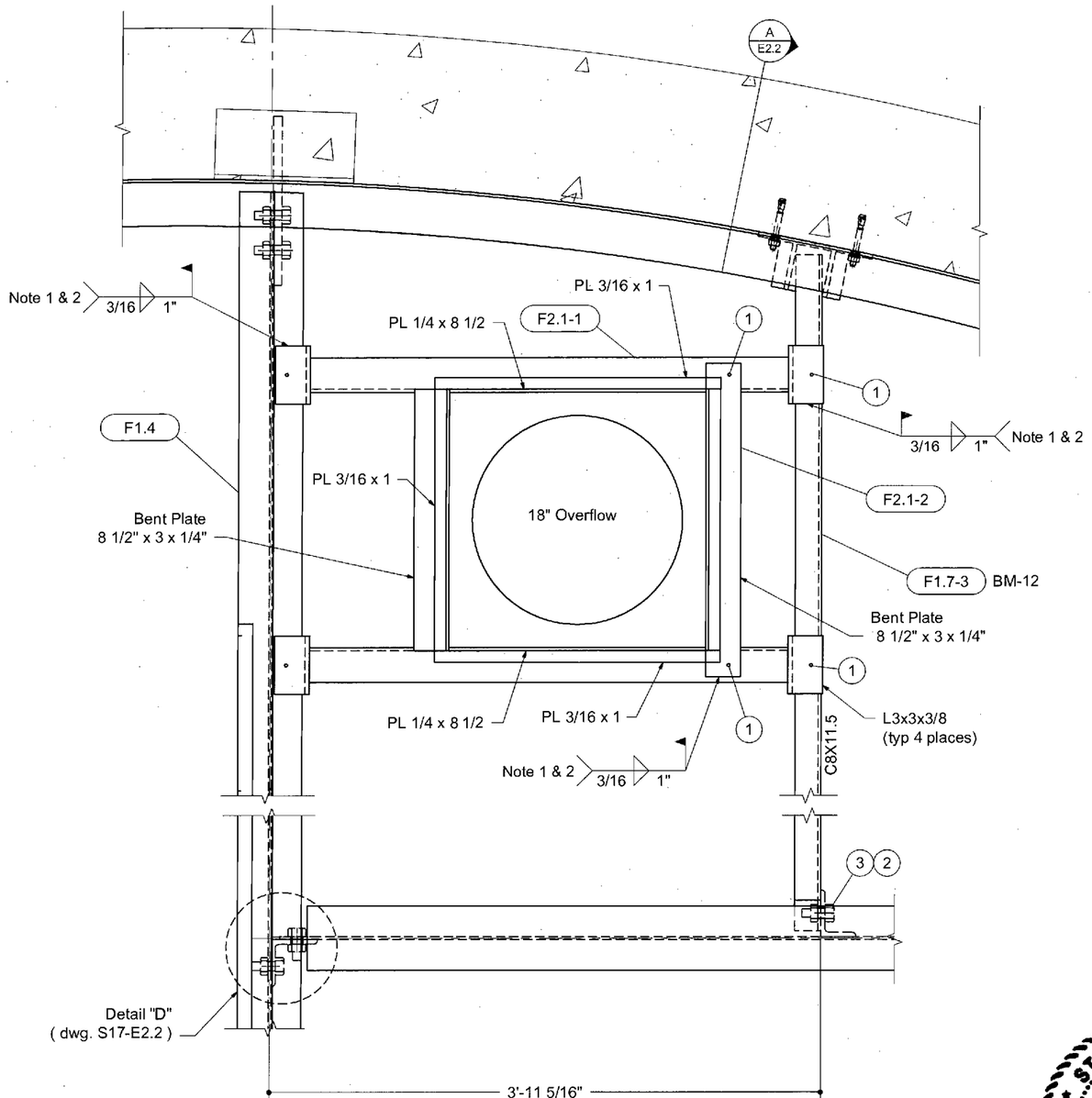

Bill of Material				
MK#	QTY.	Description	Spec.	Ref. Drawing
F2.1-1	2	Overflow Framing	A36	S17-F2.1
F2.1-2	2	Overflow Framing (field install)	A36	S17-F2.1
(1)	20	#12 TEK screw W/#5 point 1 1/2" long		
(2)	4	Nut UNC 3/4" Heavy Hex	A563-DH	
(3)	4	Bolt UNC 3/4" x 2" lg.	A325	

* All Qty's reflect requirements for (2) intermediate floors.

NOTES:

1. All welding to be done with E70XX electrode.
2. Attach using self tapping screws (1) thru 1/4" pilot holes. Alternative attachment field weld as shown.

STATE OF TEXAS
JOHN E. GRENDZINSKI
87324
LICENSED
PROFESSIONAL ENGINEER
02-01-08

LANDMARK
1665 Harmon Road, Ft. Worth, TX. 76177 817-439-9002

Rev.	Revision Description	Date

INTERMEDIATE FLOOR OVERFLOW FRAMING

CITY OF ROCKWALL, TEXAS
2.0 MG ELEVATED WATER STORAGE TANK
(L.S.LP Job No. 1190)

Date 18 Dec 07
Scale:
Chk.
Dwn. RAG

S17-E2.5

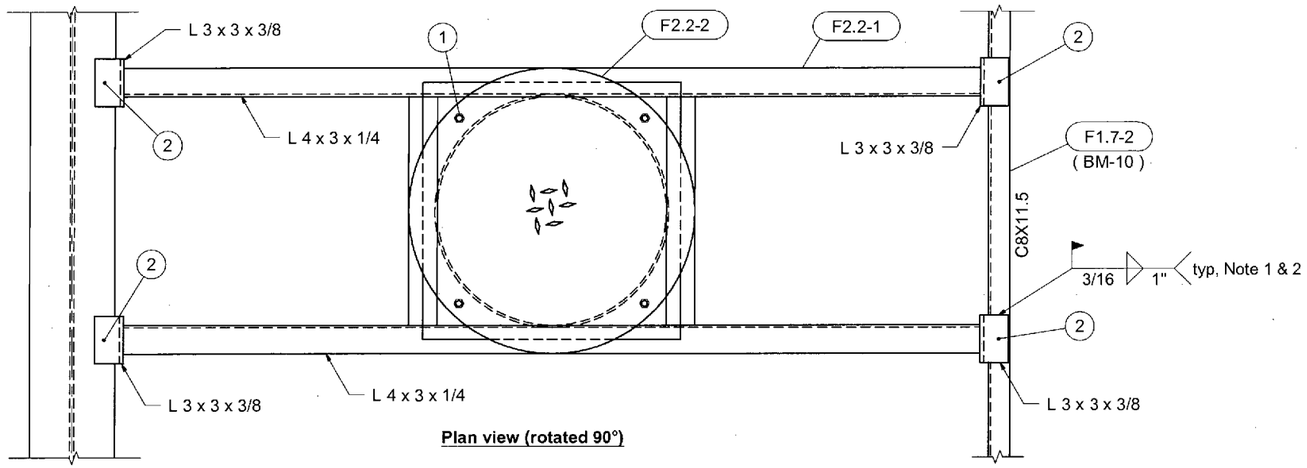

Plan view (rotated 90°)

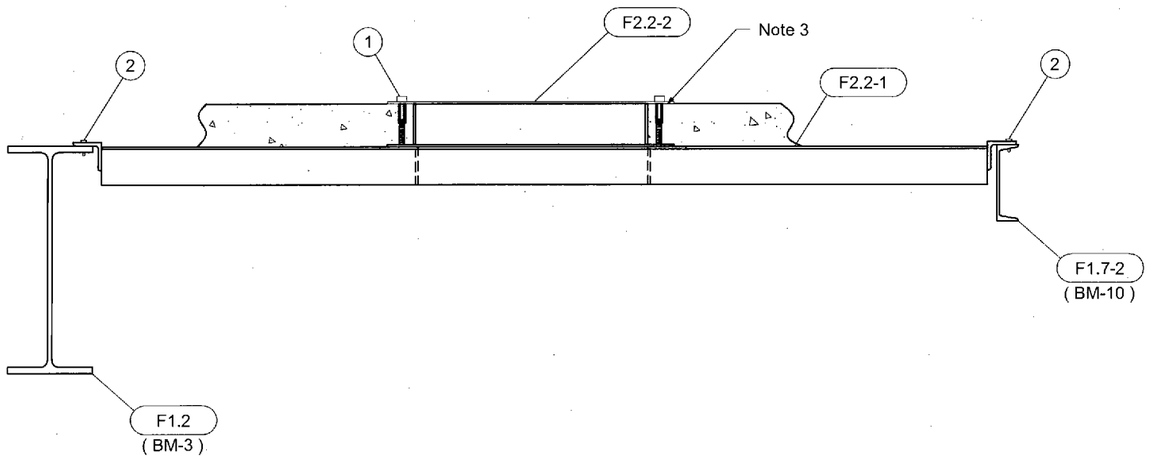

Bill of Material				
MK#	QTY.	Description	Spec.	Ref. Drawing
F2.2-1	1	Manhole Framing	A36	S17-F2.2
F2.2-2	1	Manhole Cover		S17-F2.2
(1)	4	Bolt 1/2" UNC x 1 1/2"		
(2)	4	#12 TEK Screw w/#5 point 1 1/2" long		

NOTES:

1. All welding to be done with E70XX electrode.
2. Attach using self tapping screws (2) thru 1/4" pilot holes. Alternative attachment field weld as shown.
3. Protect coupling threads during concrete placement.
4. For framing location see S17-E2.1.

STATE OF TEXAS
JOHN E. GRENDZINSKI
87324
LICENSED
PROFESSIONAL ENGINEER
02-01-08

LANDMARK
1665 Harmon Road, Ft. Worth, TX. 76177 817-439-9002

Rev.	Revision Description	Date

INTERMEDIATE FLOOR MANHOLE FRAMING

CITY OF ROCKWALL, TEXAS
2.0 MG ELEVATED WATER STORAGE TANK
(L.S.LP Job No. 1190)

Date 18 Dec 07
Scale:
Chk.
Dwn. RAG

S17-E2.6

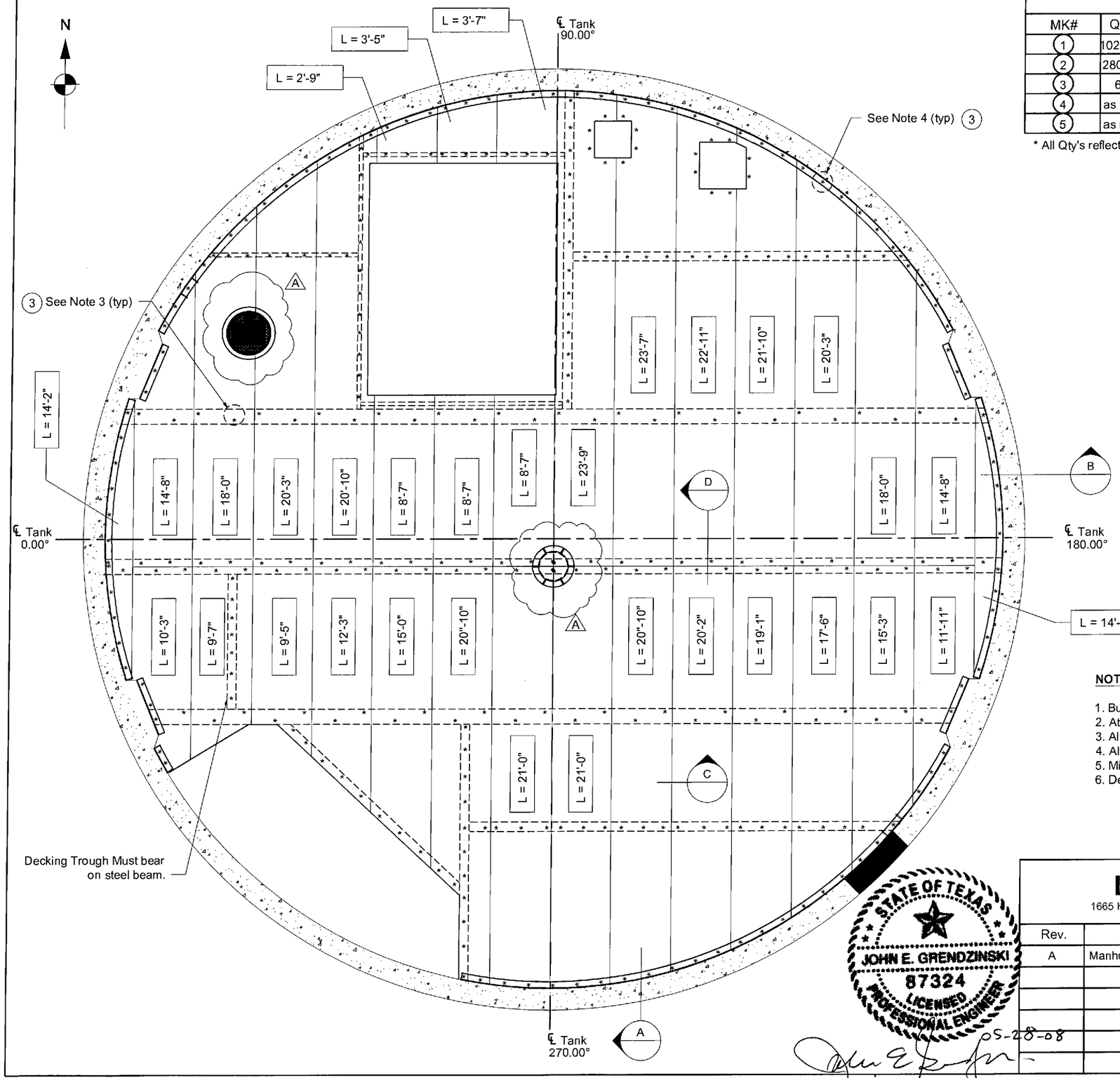

Bill of Material				
MK#	QTY.	Description	Spec.	Ref. Drawing
1	1020 L.F	Vulcraft 2VLI 18ga Decking (galvanized finish)		
2	280 L.F.	1/2" Expansion Joint Material		
3	650	PAT Fastener Hilti Part# EPNH 2-21 (70 extra)		
4	as req'd	Decking Cell Closure		
5	as req'd	Decking Girder Filler		

* All Qty's reflect requirements for (2) intermediate floors.

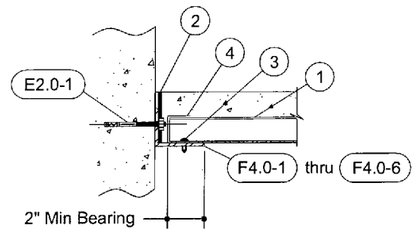

Section 'A'
(Scale: 1"=1'-0")

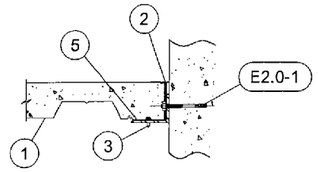

Section 'B'
(Scale: 3/4"=1'-0")

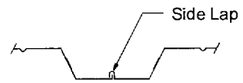

Section 'C'
(N.T.S.)

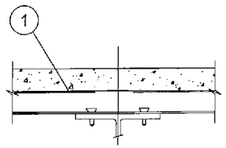

Section 'D'
(N.T.S.)

NOTES:

1. Butt ends of steel deck joint and duct tape at seam.
2. Attach decking using Hilti PAT fasteners (3) @ 12" spacing (each trough) over supporting steel members.
3. Alternative Attachment to main beams is a 5/8" puddle weld.
4. Alternative Attachment to perimeter angle using #12 TEK screws W/#5 point 1 1/2" lg.
5. Minimum decking bearing on supporting steel elements = 2" external, 3" internal (main beams).
6. Deck accessories are to be positively attached by welding, screwing or button punching as follows:
   a. Side laps at 36" o.c.
   b. Pour stops art 12" o.c.
   c. Girder fillers and split deck sheets at 18" o.c.
   d. cell closures at 36" o.c.

STATE OF TEXAS
JOHN E. GRENDZINSKI
87324
LICENSED
PROFESSIONAL ENGINEER
05-28-08

LANDMARK
1665 Harmon Road, Ft. Worth, TX. 76177 817-439-9002

Rev.	Revision Description	Date
A	Manhole location	29 April 08

INTERMEDIATE FLOOR
STEEL DECK LAYOUT DETAILS

CITY OF ROCKWALL, TEXAS
2.0 MG ELEVATED WATER STORAGE TANK
(L.S.LP Job No. 1190)

Date 18 Dec 07
Scale:
Chk.
Dwn. RAG

S17-E3.0

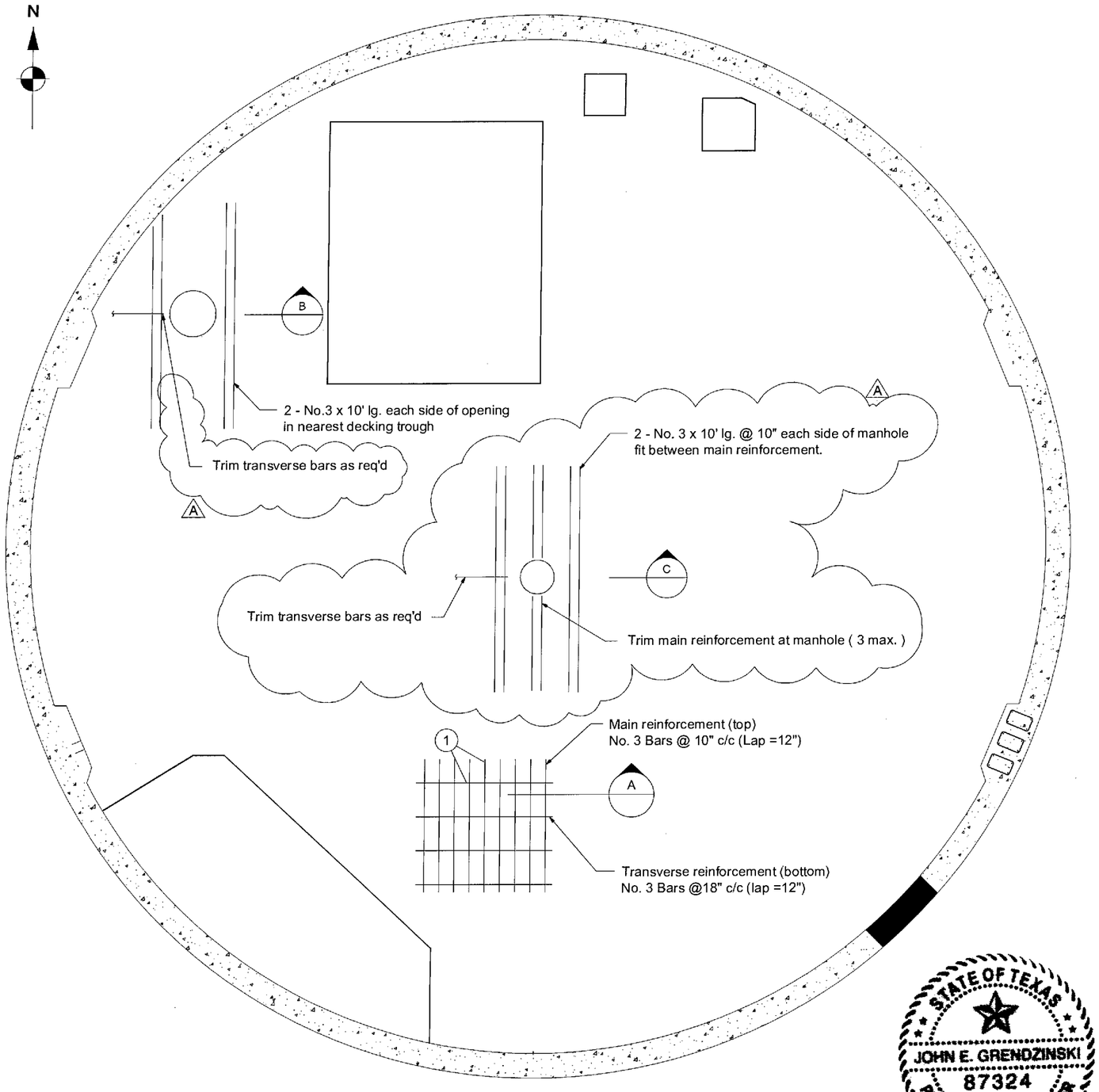

Bill of Material				
MK#	QTY.	Description	Spec.	Ref. Drawing
1	410	20' Long No. 3 reinforcement bars (3084 lbs)	A615 Gr. 60	
2	34cy	Concrete 4200 psi min 28 day compressive strength		
		3/4" max. aggregate size		

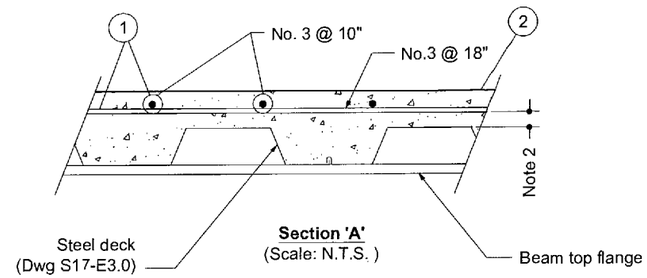

Section 'A'
(Scale: N.T.S.)

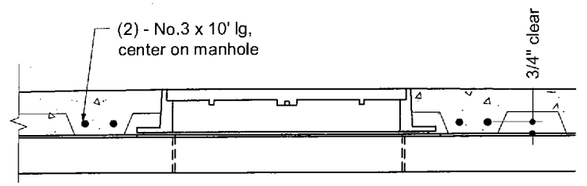

Section 'B'
(Scale: N.T.S.)

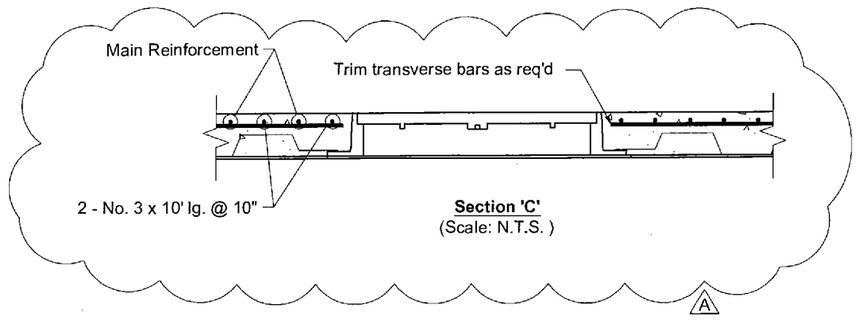

Section 'C'
(Scale: N.T.S.)

NOTES:

1. Place 2 1/2" concrete over 2" steel deck. Total slab depth is 4 1/2".
2. Provide 3/4" clear from top of decking to underside of reinforcement.
3. Finish - steel trowel

STATE OF TEXAS
JOHN E. GRENDZINSKI
87324
LICENSED
PROFESSIONAL ENGINEER
05-28-08

LANDMARK 1665 Harmon Road, Ft. Worth, TX. 76177 817-439-9002			INTERMEDIATE FLOOR CONCRETE AND REINFORCEMENT	
Rev.	Revision Description	Date	CITY OF ROCKWALL, TEXAS 2.0 MG ELEVATED WATER STORAGE TANK (L.S.LP Job No. 1190)	
A	Added rebar aside tie off cover	20 May 08		
			Date 19 Dec 07	S17-E4.0
			Scale:	
			Chk.	
			Dwn. RAG	

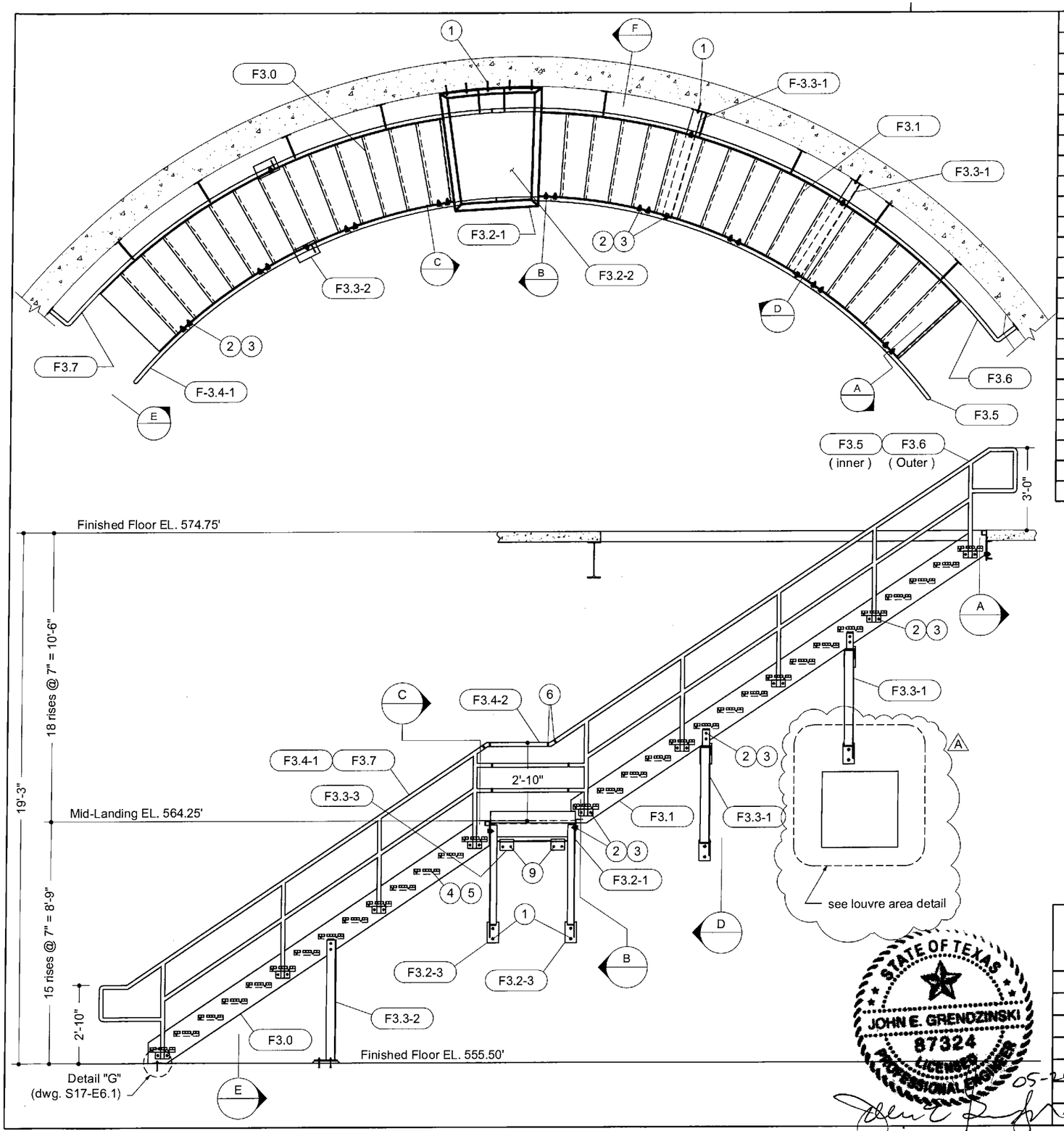

Bill of Material

MK#	QTY.	Description	Spec.	Ref. Drawing
F3.0	1	Lower Stair Stringer		S17-F3.0
F3.1	1	Upper Stair Stringer (1st to 2nd Floor)		S17-F3.1
F3.2-1	1	Mid-Landing Framing	A36	S17-F3.2
F3.2-2	1	Mid-Landing Grating (W-19-4 (1X1/8))	MBG-531	S17-F3.2
F3.2-3	2	Mid-Landing Kicker support	A36	S17-F3.2
F3.3-1	2	Upper Stair stringer support	A36	S17-F3.3
F3.3-2	2	Lower Stair Stringer Support	A36	S17-F3.3
F3.3-3	2	Mid Landing Temp Support	A36	S17-F3.3
F3.4-1	1	Handrail - Lower Inside		S17-F3.4
F3.4-2	6	Mid-Landing Handrail Connection Pieces		S17-F3.4
F3.5	1	Handrail - Upper Inside		S17-F3.5
F3.6	1	Handrail - Upper Outside		S17-F3.6
F3.7	1	Handrail - Lower Outside		S17-F3.7
1	50	5/8 x 6" lg. Hilti KB3 (8 extra)		
2	55	Nut UNC 3/4" Heavy Hex (6 extra)	A563-DH	
3	55	Bolt UNC 3/4" x 2" lg. (6 extra)	A325	
4	140	Nut UNC 1/2" Heavy Hex (16 extra)	A563-DH	
5	140	Bolt UNC 1/2" x 1 1/2" lg. (16 extra)	A325	
6	14	Wedge Lock Connector McNichols Part#1023 (2 extra)		
7	4	Threaded Rod 1/2 x 5 lg.	A307	
8	4	Threaded Rod 1/2 x 3 1/2" lg.	A307	
9	8	1/2" x 4 1/2" lg. Hilti KB3 (4 extra)		

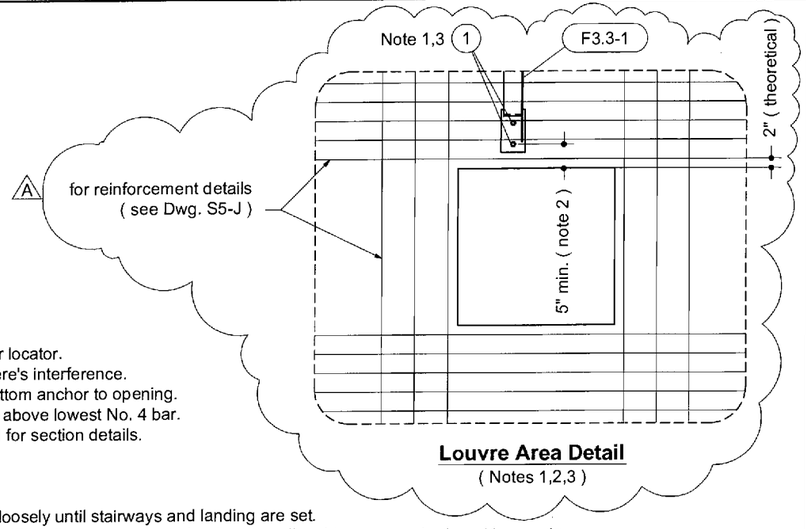

Louvre Area Detail
(Notes 1,2,3)

Notes:

1. Locate Rebar with rebar locator.
   Notify engineering if there's interference.
2. Provide min. 5" from bottom anchor to opening.
3. Bottom anchor must be above lowest No. 4 bar.
4. See drawings S17-E6.1 for section details.

Erection Notes:

1. Fit Beam BM-13 (F1.9) loosely until stairways and landing are set.
2. Use temporary supports (F3.3-3) to support mid-landing at wall and temporary shoring at inner edge.

STATE OF TEXAS
JOHN E. GRENDZINSKI
87324
LICENSED
PROFESSIONAL ENGINEER
05-20-08

LANDMARK
1665 Harmon Road, Ft. Worth, TX. 76177 817-439-9002

Rev.	Revision Description	Date
A	Added Louvre Area Detail	20 May 08

INTERMEDIATE FLOOR STAIRWAY LAYOUT (1st to 2nd FLR.)

CITY OF ROCKWALL, TEXAS
2.0 MG ELEVATED WATER STORAGE TANK
(L.S.LP Job No. 1190)

Date 19 Dec 07
Scale:
Chk.
Dwn. RAG

S17-E6.0a

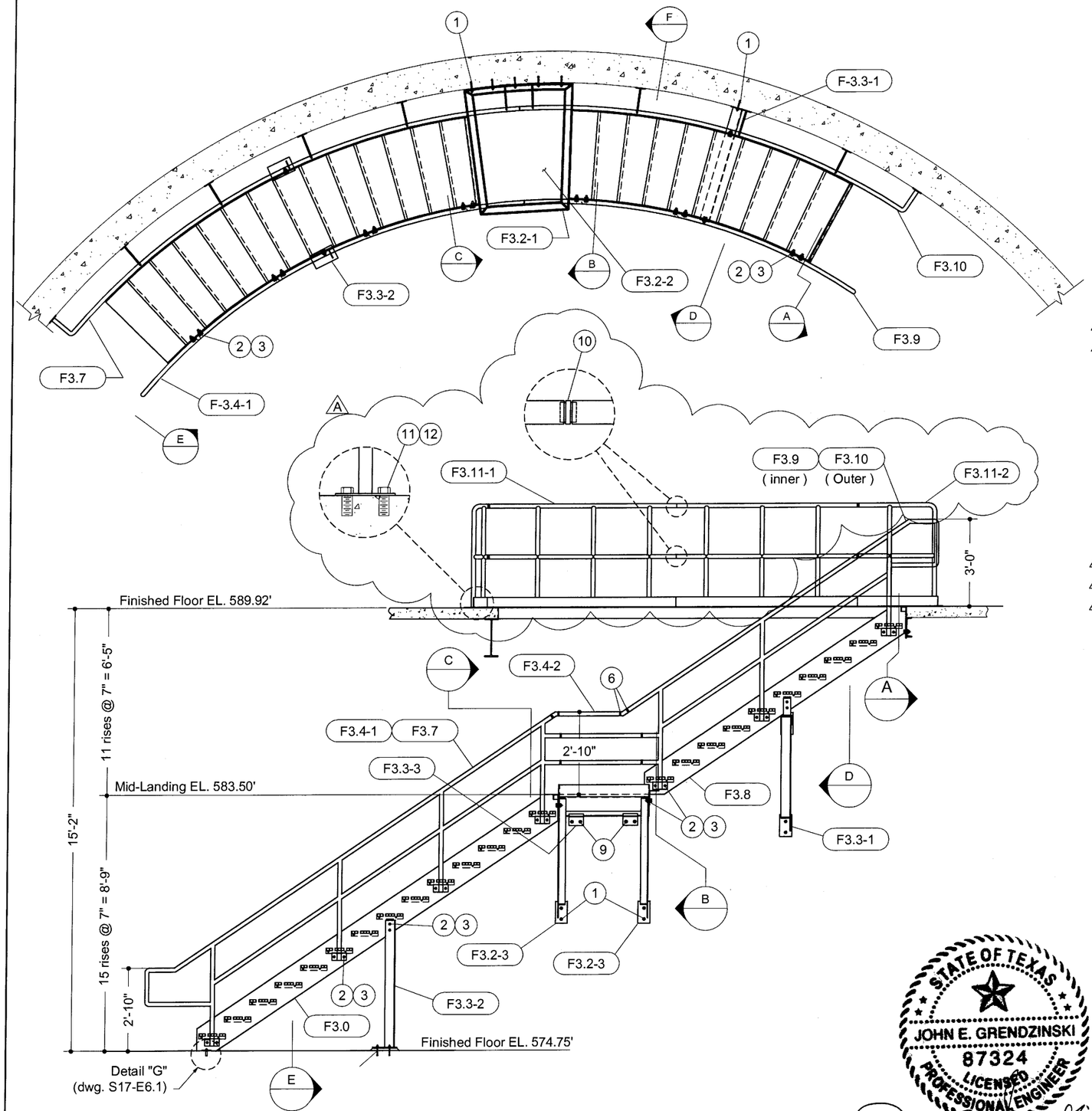

Bill of Material

MK#	QTY.	Description	Spec.	Ref. Drawing
F3.0	1	Lower Stair Stringer		S17-F3.0
F3.8	1	Upper Stair Stringer (2nd to 3rd Floor)		S17-F3.8
F3.2-1	1	Mid-Landing Framing	A36	S17-F3.2
F3.2-2	1	Mid-Landing Grating (W-19-4 (1x1/8))	MBG-531	S17-F3.2
F3.2-3	2	Mid-Landing Kicker support	A36	S17-F3.2
F3.3-1	1	Upper Stair stringer support	A36	S17-F3.3
F3.3-2	2	Lower Stair Stringer Support	A36	S17-F3.3
F3.3-3	2	Mid Landing Temp Support	A36	S17-F3.3
F3.4-1	1	Handrail - Lower Inside		S17-F3.4
F3.4-2	6	Mid-Landing Handrail Connection Pieces		S17-F3.4
F3.5	1	Handrail - Upper Inside		S17-F3.5
F3.6	1	Handrail - Upper Outside		S17-F3.6
F3.7	1	Handrail - Lower Outside		S17-F3.7
A F-3.11-1	1	Handrail - Stiarway Opening		S17-F3.11
A F-3.11-2	1	Handrail - Stiarway Opening		S17-F3.11
(1)	50	5/8 x 6" lg. Hilti KB3 (8 extra)		
(2)	45	Nut UNC 3/4" Heavy Hex (8 extra)	A563-DH	
(3)	45	Bolt UNC 3/4" x 2" lg. (8 extra)	A325	
(4)	110	Nut UNC 1/2" Heavy Hex (14 extra)	A563-DH	
(5)	110	Bolt UNC 1/2" x 1 1/2" lg. (14 extra)	A325	
(6)	14	Wedge Lock Connector McNichols Part#1023 (4 extra)		
(7)	4	Threaded Rod 1/2 x 5 lg.	A307	
(8)	4	Threaded Rod 1/2 x 3 1/2" lg.	A307	
(9)	8	1/2" x 4 1/2" lg. Hilti KB3 (4 extra)		
A (10)	2	Wedge Lock connector (McNichols Part # 1023)		
A (11)	20	Hilti Drop in Anchor 2" embedment		
A (12)	20	Bolt UNC 1/2" x 1" lg.		

Notes:

1. See drawings S17-E6.1 for section details.

Erection Notes:

1. Fit Beam BM-13 (F1.9) loosely until stairways and landing are set.
2. Use temporary supports (F3.3-3) to support mid-landing at wall and temporary shoring at inner edge.

STATE OF TEXAS
JOHN E. GRENDZINSKI
87324
LICENSED
PROFESSIONAL ENGINEER
06-17-08

LANDMARK
1665 Harmon Road, Ft. Worth, TX. 76177 817-439-9002

Rev.	Revision Description	Date
A	Added guardrail at top of stairway	10 June 08

INTERMEDIATE FLOOR
STAIRWAY LAYOUT (2nd to 3rd Floor)

CITY OF ROCKWALL, TEXAS
2.0 MG ELEVATED WATER STORAGE TANK
(L.S.LP Job No. 1190)

Date 19 Dec 07
Scale:
Chk.
Dwn. RAG

S17-E6.0b

Bill of Material				
MK#	QTY.	Description	Spec.	Ref. Drawing

For Bill of Materials see S17-E6.0

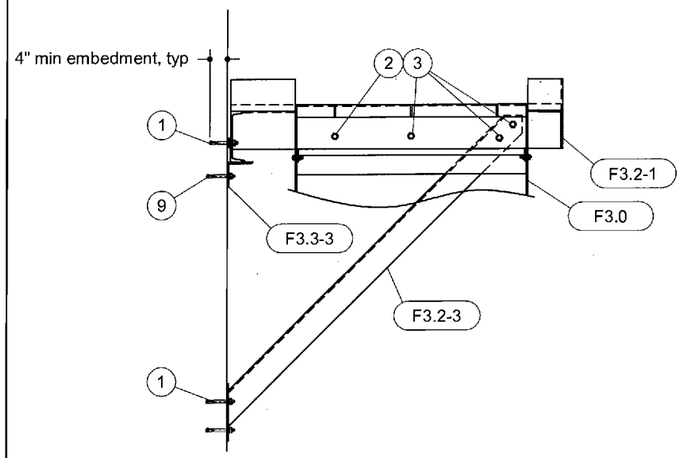

Section 'C'

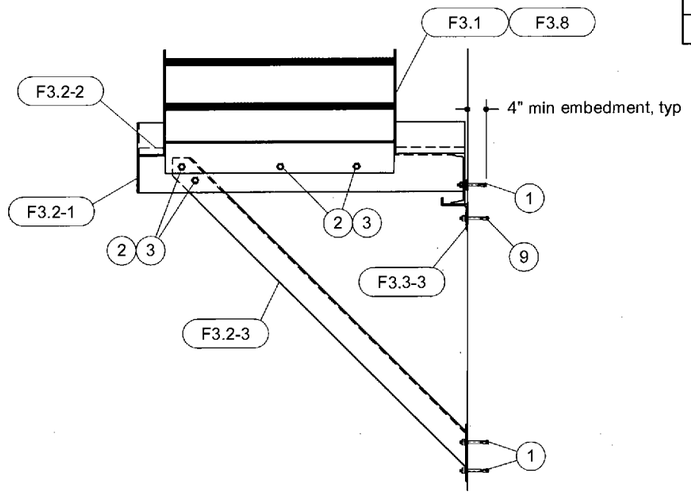

Section 'B'

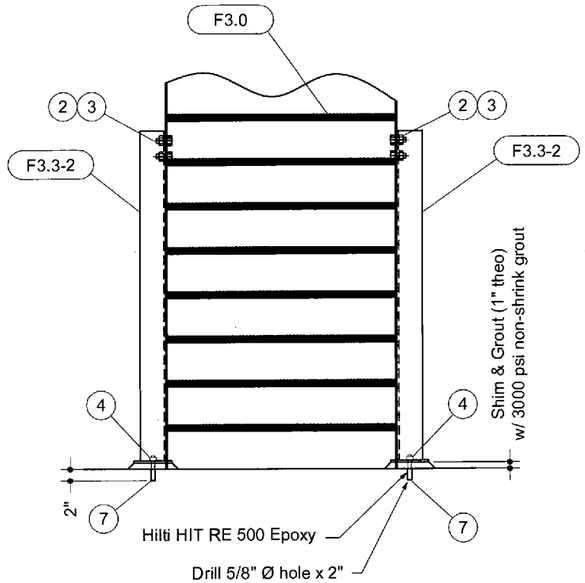

Section 'E'

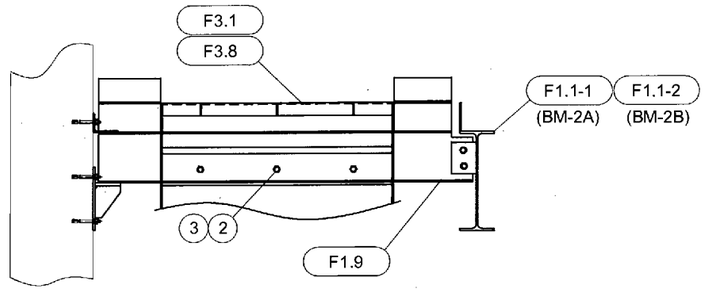

Section 'A'

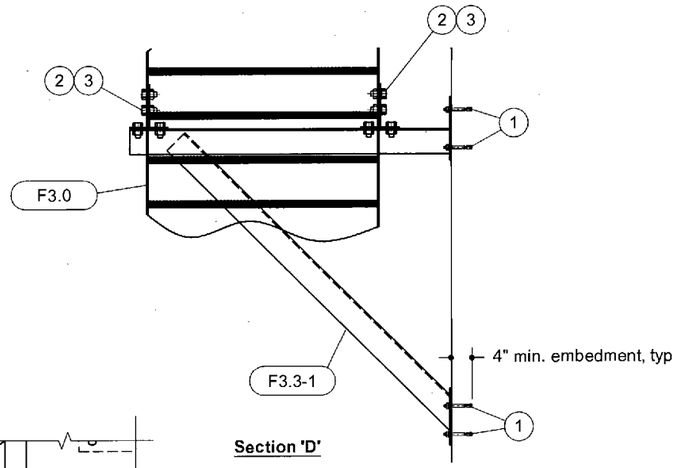

Section 'D'

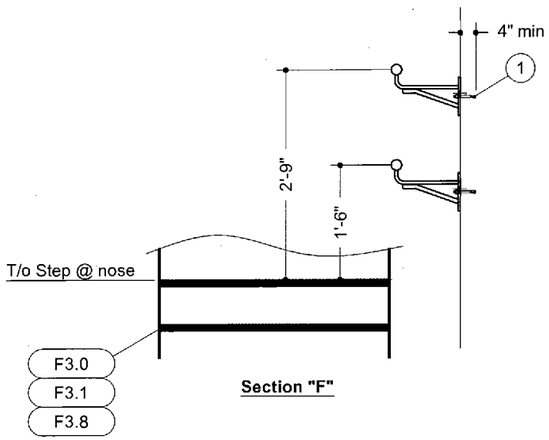

Section "F"

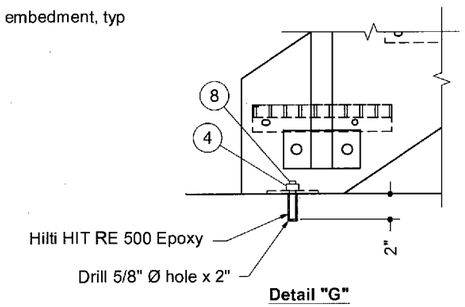

Detail "G"

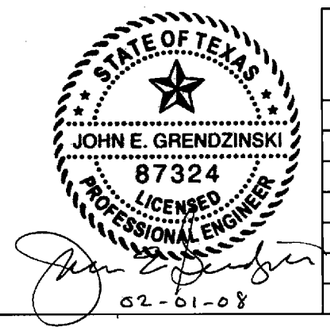

LANDMARK
1665 Harmon Road, Ft. Worth, TX. 76177 817-439-9002

Rev.	Revision Description	Date

INTERMEDIATE FLOOR STAIRWAY SECTIONS AND DETAILS

CITY OF ROCKWALL, TEXAS
2.0 MG ELEVATED WATER STORAGE TANK
(L.S.LP Job No. 1190)

Date 28 Jan 08
Scale:
Chk.
Dwn. RAG

S17-E6.1

	MARK	NO BARS	SIZE	LENGTH MAT'L	TYPE	A	B	C	D	E	F/G	H	K/H2	O	R	WEIGHT
	BAR LIST - IMPERIAL															
	FOUNDATION												**TOTAL (TONS / LBS) -**		**9.13**	**18,262**
REV A	F501	184	5	9.50	17		1.75	7.75								1,823
	F1002	184	10	16.83	17		1.75	13.33	1.75							13,325
	F603	36	6	22.63	9		22.63					2.33		21.97	27.03	1,224
	F604	32	6	21.38	9		21.38					2.52		20.57	22.24	1,028
	F605	29	6	19.78	9		19.78					2.73		18.74	17.45	862
	MISCELLANEOUS (OPTIONAL)												**TOTAL (TONS / LBS) -**		**0.66**	**1,320**
	Z501	18	5	25.88	9		25.88					3.55		24.53	22.96	486
	Z502	40	5	20.00	STR											834
	WALL												**TOTAL (TONS / LBS) -**		**0.41**	**813**
	W501	30	5	25.99	9		25.99					3.61		24.60	22.75	813
	CRANE TOWER FOUNDATION												**TOTAL (TONS / LBS) -**		**0.95**	**1,905**
	C601	20	6	19.67	STR	CUT TO FIT ON SITE										591
	C602	12	6	16.30	STR	CUT TO FIT ON SITE										294
	C603	8	6	9.89	STR	CUT TO FIT ON SITE										119
	C504	20	5	19.67	STR	CUT TO FIT ON SITE										410
	C505	12	5	16.30	STR	CUT TO FIT ON SITE										204
	C506	8	5	9.89	STR	CUT TO FIT ON SITE										83
	C607	18	6	7.54	26		1.50	1.52	1.50	1.52	1.50					204
	WELDED WIRE FABRIC															
	188 PCS			**7' - 8" x 25' - 4"**		4 * 4 / W6.5 - W5.5 WWF										
REV C	**SLAB ON GRADE**												**TOTAL (TONS / LBS) -**		**2.24**	**4,476**
REV A	G301	210	3	26.00	STR.	CUT TO FIT ON SITE										2,053
REV C	G602	38	6	11.67	STR											666
REV C	G603	32	6	13.67	STR											657
REV C	G504	80	5	3.83	STR											320
REV C	G505	32	5	13.00	17		6.00	7.00								434
REV C	G506	80	5	4.17	17		2.92	1.25								346

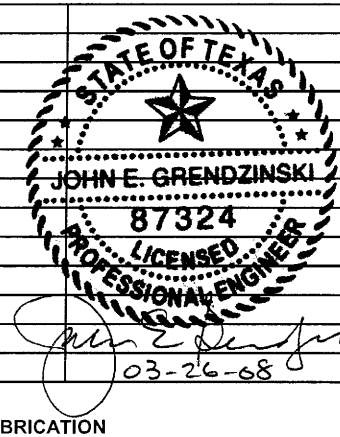

GRADE - 60 KSI

job **CITY OF ROCKWALL, TEXAS**
2.0 MG ELEVATED WATER STORAGE TANK
(L.S.LP Job No. 1190)

REINFORCING STEEL FABRICATION

ALL REBAR TO BE FABRICATED IN ACCORDANCE WITH ASA/REBAR SYSTEMS - STANDARD BAR BENDS

Date 06 / 07	**Dwn.** DK	**Rev**	
		C	**DWG # S20-B**
Alloc.	**Chk.**	Imp	**P - 2 / 4**

	MARK	NO BARS	SIZE	LENGTH MAT'L	BAR LIST - IMPERIAL TYPE	A	B	C	D	E	G	H	K	O	R	WEIGHT
	DOORS													TOTAL (TONS / LBS) -	20.15	40,290
	D301	68	3	4.08	T2	0.33	0.79	0.92	0.79	0.92	0.33					104
	D702	8	7	10.50	9		10.50					0.59		10.41	23.18	172
	D1003	16	10	17.92	STR											1,234
	D404	336	4	5.06	T2	0.38	1.45	0.70	1.45	0.70	0.38					1,136
	D405	160	4	4.16	T2	0.38	0.75	0.95	0.75	0.95	0.38					445
	D406	112	4	2.63	STR											197
	D407	320	4	4.00	STR											855
	D1108	28	11	27.58	9		27.58					3.98		25.98	23.17	4,103
	D809	64	8	11.10	31		3.25	1.46	6.39			0.24	1.44	11.08		1,897
	D1110	264	11	11.43	31		4.50	1.46	5.47			0.24	1.44	11.41		16,032
	D1111	88	11	11.66	STR											5,452
	D712	4	7	7.00	9		7.00					0.27		6.97	22.96	57
	D713	16	7	7.67	STR											251
Rev A	D414	136	4	8.17	9		8.17					0.36		8.13	22.96	742
Rev A	D1115	80	11	11.00	STR											4,675
	D416	120	4	5.00	T2	0.38	0.75	1.37	0.75	1.37	0.38					401
Rev A	D417	40	4	1.51	T9	0.38			0.75		0.38					40
Rev B	D918	8	9	21.83	9		21.83					2.58		20.99	22.61	594
Rev B	D319	100	3	5.61	S10		2.42	0.77	2.42							211
Rev B	D620	96	6	10.00	STR											1,442
Rev B	D521	48	5	5.00	STR											250
	THRESHOLD													TOTAL (TONS / LBS) -	0.28	560
	T501	14	5	2.66	17		1.33	1.33								39
	T502	2	5	13.83	9		13.83					1.02		13.63	23.29	29
	T503	25	5	16.00	STR.											417
	T504	8	5	9.00	STR.											75
	MECHANICAL													TOTAL (TONS / LBS) -	0.42	836
	M701	15	7	2.50	STR.											75
	M702	4	7	16.00	STR.	CUT TO FIT ON SITE										129
	M503	40	5	2.50	STR.											102
	M504	14	5	4.67	STR.											66
	M505	12	5	3.92	17		1.25	2.67								47
	M506	12	5	4.42	17		1.50	2.92								53
	M707	13	7	9.25	STR.											244
	M508	18	5	6.50	17		2.42	4.08								120

STATE OF TEXAS
JOHN E. GRENDZINSKI
87324
LICENSED
PROFESSIONAL ENGINEER
09-07-07

GRADE - 60 KSI

job CITY OF ROCKWALL, TEXAS
2.0 MG ELEVATED WATER STORAGE TANK
(L.S.LP Job No. 1190)

REINFORCING STEEL FABRICATION

ALL REBAR TO BE FABRICATED IN ACCORDANCE WITH ASA/REBAR SYSTEMS - STANDARD BAR BENDS

Date 06 / 07 | Dwn. DK | Rev *B* Imp | DWG # S20-C

Alloc. | Chk. | P - 2 / 3

MARK	NO BARS	SIZE	LENGTH MAT'L	BAR LIST - IMPERIAL TYPE	A	B	C	D	E	G	H	K	O	R	WEIGHT
FLOOR SLAB													TOTAL (TONS / LBS) -	9.01	18,013
S501	132	5	21.83	STR											3,005
S502	132	5	14.01	STR											1,929
S503	15	5	11.07	9		11.07					3.41		7.47	3.75	173
S504	24	5	13.51	9		13.51					3.31		11.01	6.23	338
S505	35	5	14.95	9		14.95					2.88		13.36	9.19	546
S506	45	5	19.78	9		19.78					3.69		17.80	12.58	928
S507	54	5	20.79	9		20.79					3.19		19.42	16.38	1,171
S508	77	5	22.16	9		22.16					2.92		21.10	20.50	1,780
S609	132	6	6.34	16			3.42	2.92			2.92	0.17			1,257
S610	44	6	2.67	STR											176
S911	48	9	29.51	9		29.51					4.54		27.56	23.18	4,816
S512	132	5	4.26	21			2.35	1.91			1.28	1.35			586
S513	132	5	5.25	17		1.00	4.25								723
S614	4	6	10.07	10	1.50	7.07	1.50						4.50	2.25	61
S615	4	6	11.64	10	1.50	8.64	1.50						5.50	2.75	70
S616	32	6	8.00	9		8.00					0.17		7.99	46.00	385
S617	2	6	6.00	STR											18
S618	4	6	8.50	17		4.25	4.25								51
UPPER WALL													TOTAL (TONS / LBS) -	5.35	10,702
U801	132	8	10.00	16			7.08	2.92			0.17	2.92			3,524
U802	132	8	9.91	STR											3,493
U1003	2	10	8.50	9		8.50					0.39		8.45	22.96	73
U904	36	9	29.51	9		29.51					4.54		27.56	23.17	3,612
RING BEAM													TOTAL (TONS / LBS) -	0.39	779
R501	22	5	9.41	9		9.41					0.45		9.35	24.50	216
R502	27	5	20.00	STR											563
TOTAL WEIGHT - TONS / LBS														47.77	95,533

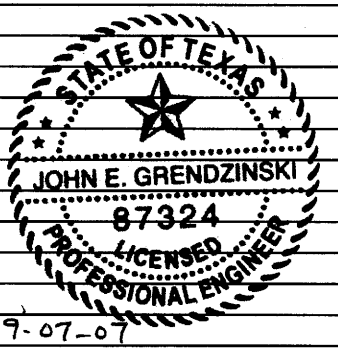

Rev B

GRADE - 60 KSI

job CITY OF ROCKWALL, TEXAS
2.0 MG ELEVATED WATER STORAGE TANK
(L.S.LP Job No. 1190)

REINFORCING STEEL FABRICATION

ALL REBAR TO BE FABRICATED IN ACCORDANCE WITH ASA/REBAR SYSTEMS - STANDARD BAR BENDS

Date 06 / 07 | Dwn. DK | Rev B | DWG # S20-D

Alloc. | Chk. | Imp | P - 3 / 3

IV. ACCESSORIES

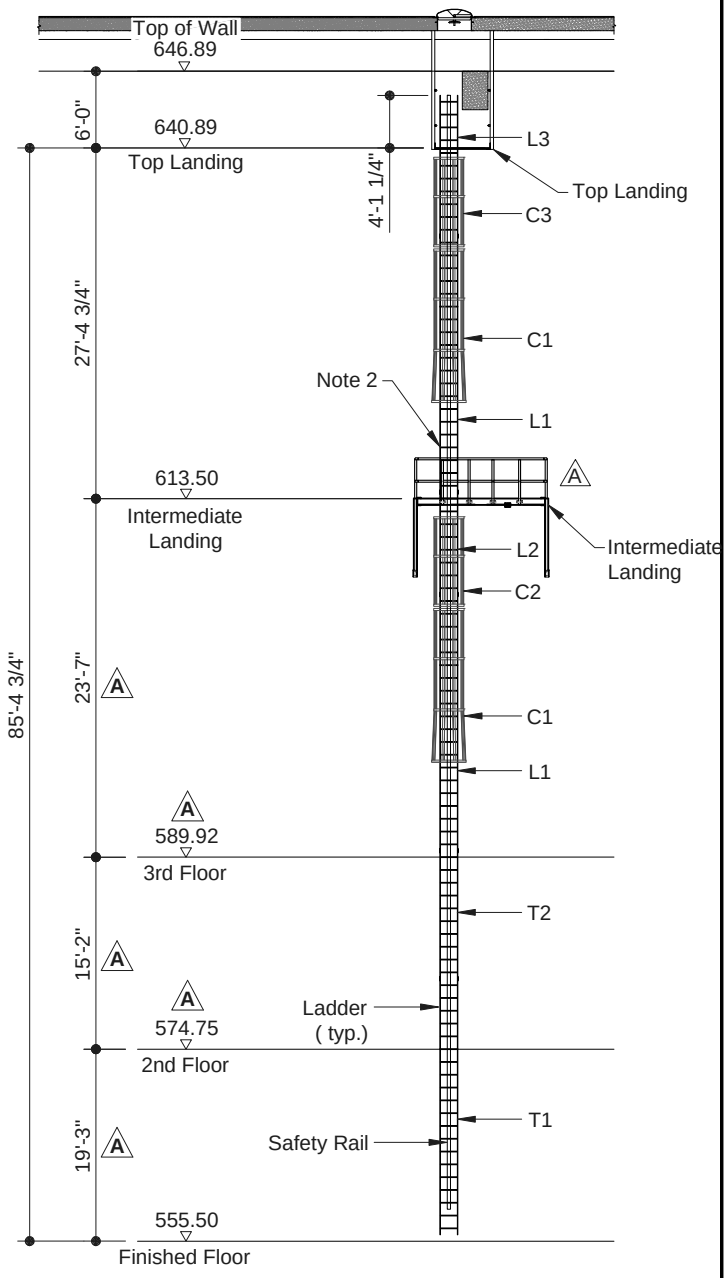

NOTES:

1. Ladder, Landing & Safety Rail - design and fabrication basis - OSHA 29 CFR 1910.
2. Drill ladder for lanyard attachment after installation of intermediate landing.

Drawing References

- 301 - A1 - Steel Ladder - Standard Details
- 311 - A - Steel Ladder Cage - Standard Details
- 314 - Safety Lanyard Attachment
- 319 - A1/A2 - Top Landing - Plan / Sections
- 301 - B1/B2 - Steel Ladder - Support / Connection
- 313 - B - Safety Climb & Harness
- 315 - A1/A2 - Intermediate Landing - Plan / Elevations / Sections
- 350 - A1/A2 - Inspection Rail - Layout / Section

Project:

CITY OF ROCKWALL, TEXAS

2.0 MG ELEVATED WATER STORAGE TANK

No.:	Date:	By:	Revision:
A	13/Nov/07	KKC	Changed to new size / Relocated Floors

SUPPORT WALL LADDERS / LANDINGS GENERAL ARRANGEMENT

Contractor:

LANDMARK
Landmark Structures I, LP
1665 Harmon Road Fort Worth, Texas, 76177
Tel: (817) 439-8888 Fax: (817) 439-9001

Design:	Dwn:	Job Number:
JEG	DK	1190
Chk:	Alloc:	Dwg. Number:
JEG		300 - A
Issued Date:	Scale:	
06 / 07	N.T.S.	

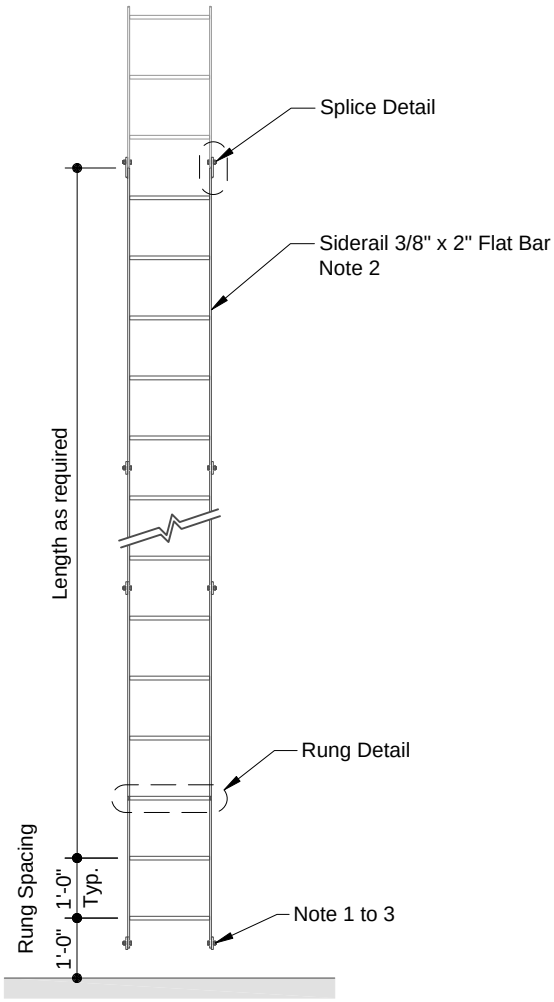

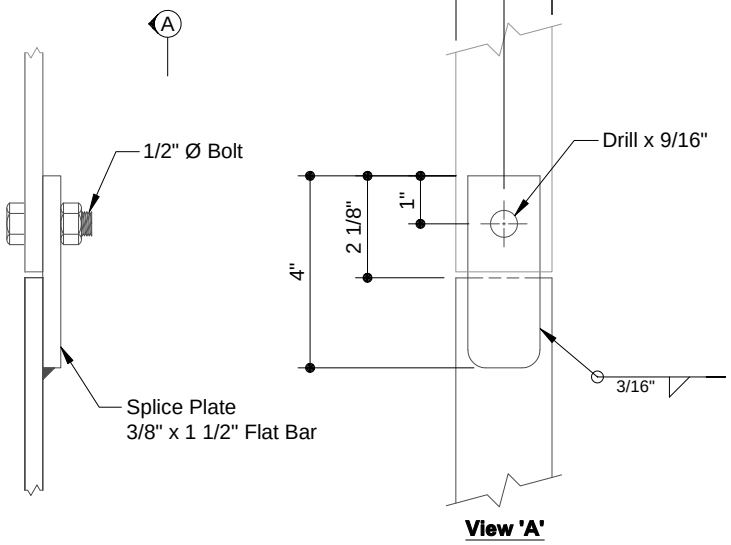

Splice Detail

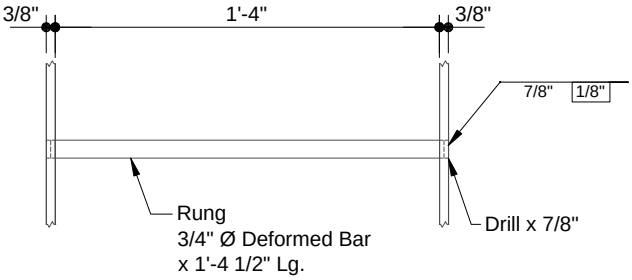

Rung Detail

NOTES:

1. Refer to Dwg. 301-B1/B2 for support bracket / connection details.
2. Provide 9/16" Ø holes as required for splice connections, support brackets and cage brackets.
3. Maximum spacing of support brackets on caged ladder section is 4'-0".
   Maximum spacing of support brackets on un-caged ladder section is 7'-0".

Material Specification

- Siderails / Splice Plate - ASTM A36 or equal
- Rungs - ASTM A706 Gr. 60 (Low Alloy Reinforcing Steel)
- Fasteners - ASTM A307 - Galvanized

Finish (unless otherwise noted)

- Zinc Coating - (hot dip galvanize) per ASTM A123

Project:
CITY OF ROCKWALL, TEXAS
2.0 MG ELEVATED WATER STORAGE TANK

No.:	Date:	By:	Revision:

STEEL LADDER STANDARD DETAILS

Contractor:
LANDMARK
Landmark Structures I, LP
1665 Harmon Road Fort Worth, Texas, 76177
Tel: (817) 439-8888 Fax: (817) 439-9001

Design:	Dwn:	Job Number:
JEG	DK	1190
Chk: JEG	Alloc:	Dwg. Number: 301 - A1
Issued Date: 06 / 07	Scale: N.T.S.	

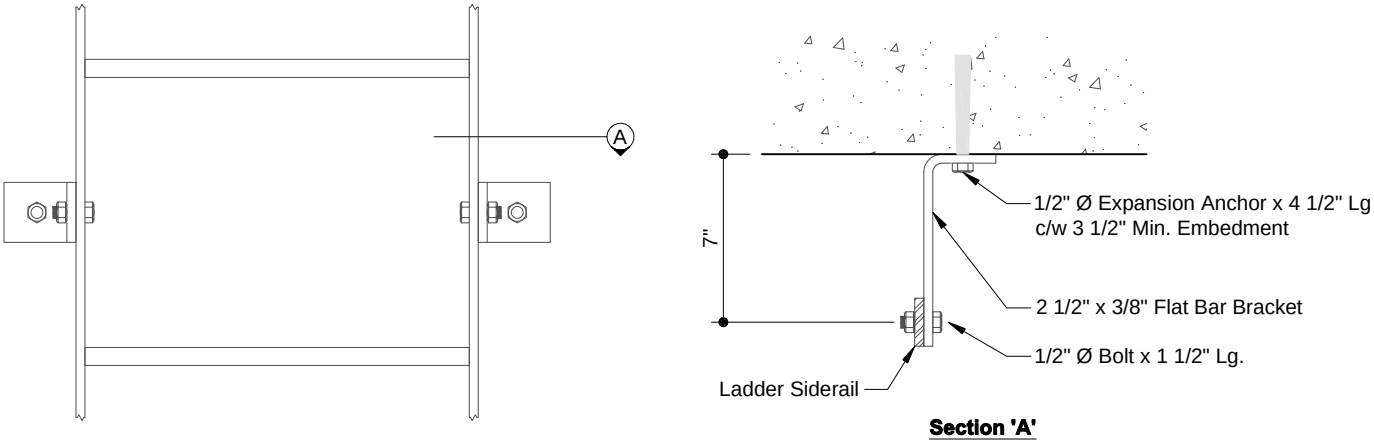

Ladder Connection - Concrete Wall

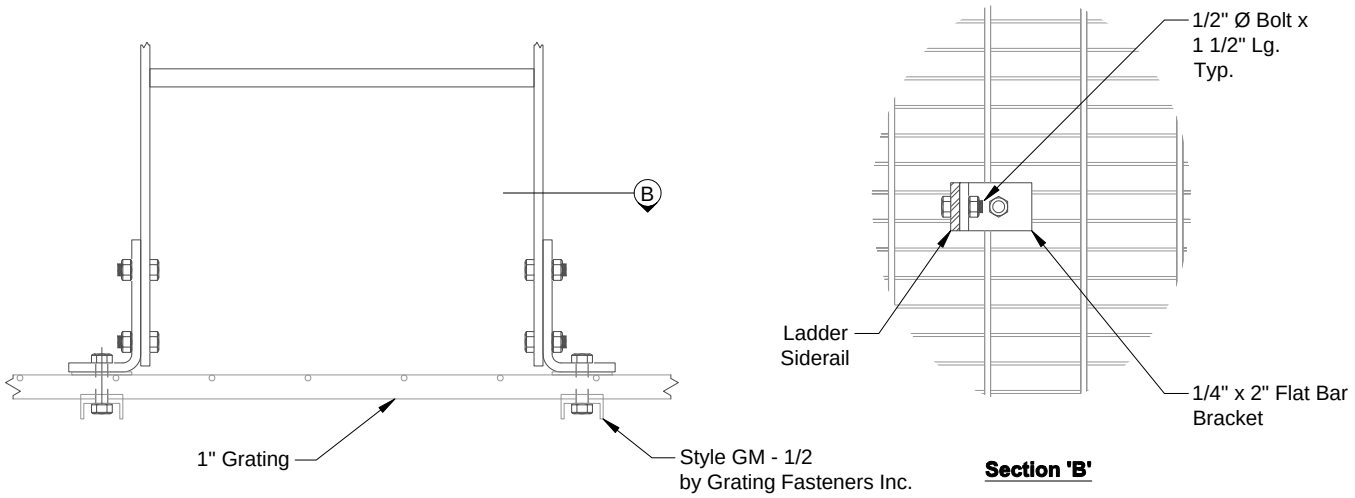

Ladder Connection - Landing

NOTES:

Material Specification

- Brackets - ASTM A36 or equal
- Fasteners - ASTM A307 - Galvanized
- Expansion Anchor - FS FF-S - 325, Group II, Type 4, Class I (Zinc Plated)

Finish (unless otherwise noted)

- Zinc Coating (hot dip galvanize) per ASTM A123

Project:
CITY OF ROCKWALL, TEXAS
2.0 MG ELEVATED WATER STORAGE TANK

No.:	Date:	By:	Revision:

STEEL LADDER SUPPORT / CONNECTION DETAILS

Contractor:
LANDMARK
Landmark Structures I, LP
1665 Harmon Road Fort Worth, Texas, 76177
Tel: (817) 439-8888 Fax: (817) 439-9001

Design:	Dwn:	Job Number:
JEG	DK	1190
Chk:	Alloc:	Dwg. Number:
JEG		301 - B1
Issued Date:	Scale:	
06 / 07	N.T.S.	

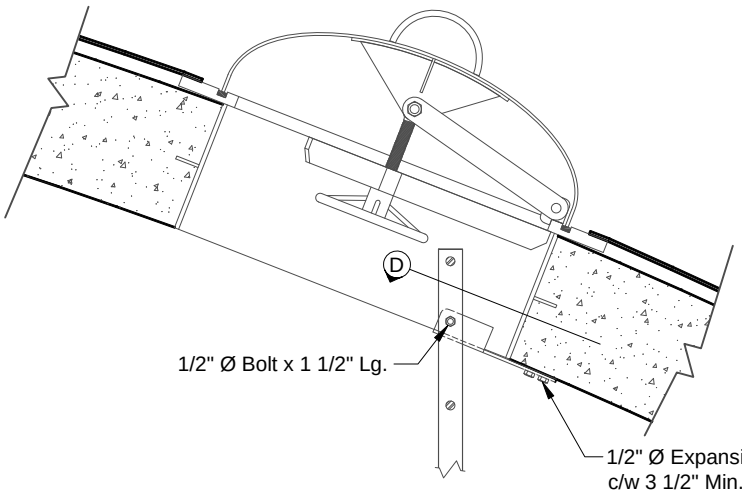

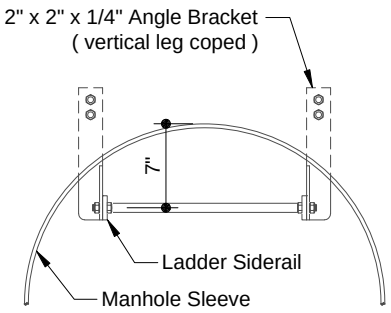

Section 'D'

Ladder Connection - Tank Floor Manhole

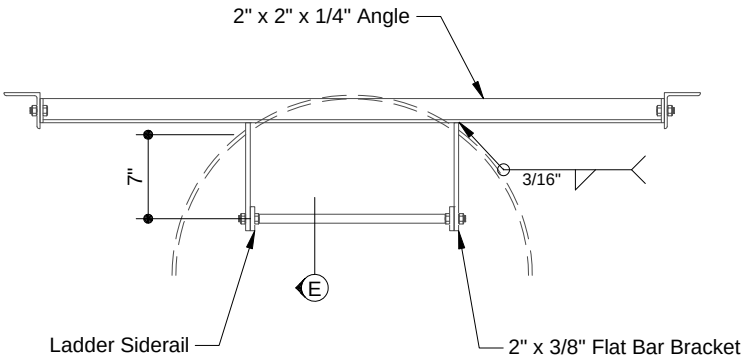

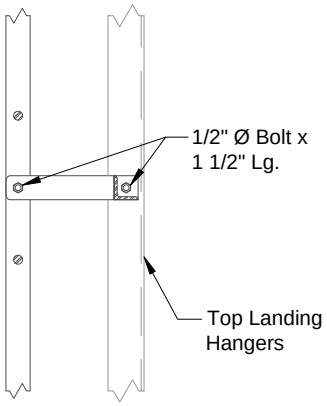

Section 'E'

Ladder Connection - Top Landing Hangers

NOTES:

1. Drill ladder siderails to suit on site. Brackets may be reversed with leg down.

Material Specification

- Brackets - ASTM A36 or equal
- Fasteners - ASTM A307 - galvanized
- Expansion Anchor - FS FF-S - 325, Group II, Type 4, Class I (Zinc Plated)

Finish (unless otherwise noted)

- Zinc Coating (hot dip galvanize) per ASTM A123

Project:
CITY OF ROCKWALL, TEXAS
2.0 MG ELEVATED WATER STORAGE TANK

No.:	Date:	By:	Revision:

STEEL LADDER SUPPORT / CONNECTION DETAILS

Contractor:
LANDMARK
Landmark Structures I, LP
1665 Harmon Road Fort Worth, Texas, 76177
Tel: (817) 439-8888 Fax: (817) 439-9001

Design:	Dwn:	Job Number:
JEG	DK	1190
Chk:	Alloc:	Dwg. Number:
JEG		301 - B2
Issued Date:	Scale:	
06 / 07	N.T.S.	

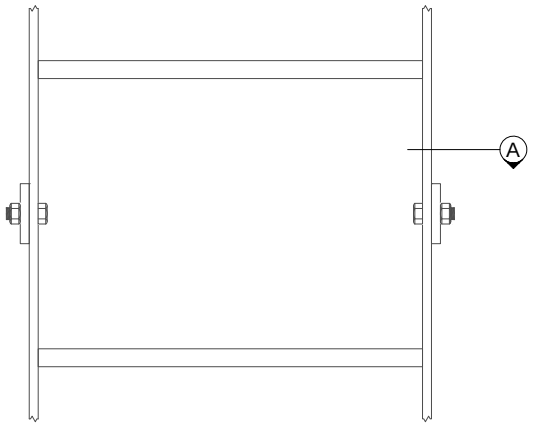

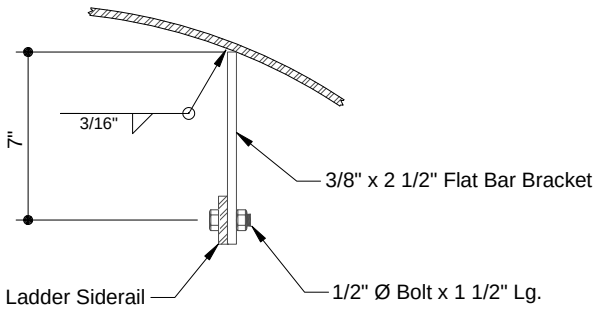

Section 'A'

Ladder Connection - Interior Access Tube

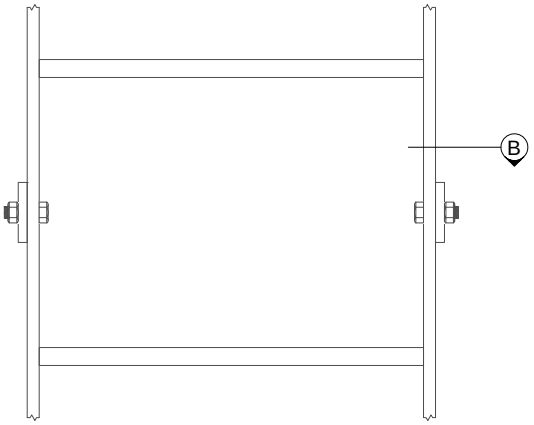

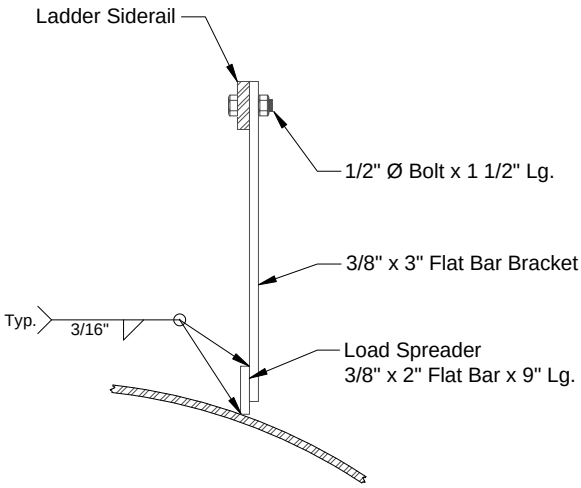

Section 'B'

Ladder Connection - Exterior Access Tube

NOTES:

Material Specification
- Brackets - ASTM A36 or equal
- Fasteners - ASTM A307 - Galvanized

Finish (unless otherwise noted)
- Ladder - Zinc Coating (hot dip galvanize) per ASTM A123
- Bracket - Painted per tank interior coating system

Project:
CITY OF ROCKWALL, TEXAS
2.0 MG ELEVATED WATER STORAGE TANK

No.:	Date:	By:	Revision:

STEEL LADDER ACCESS TUBE CONNECTION DETAILS

Contractor:
LANDMARK
Landmark Structures I, LP
1665 Harmon Road Fort Worth, Texas, 76177
Tel: (817) 439-8888 Fax: (817) 439-9001

Design:	Dwn:	Job Number:
JEG	DK	1190
Chk:	Alloc:	Dwg. Number:
JEG		301 - B3
Issued Date:	Scale:	
06 / 07	N.T.S.	

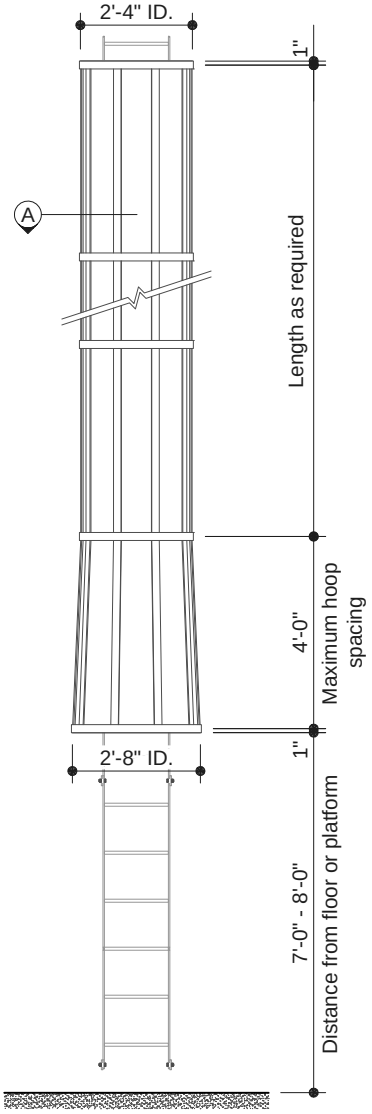

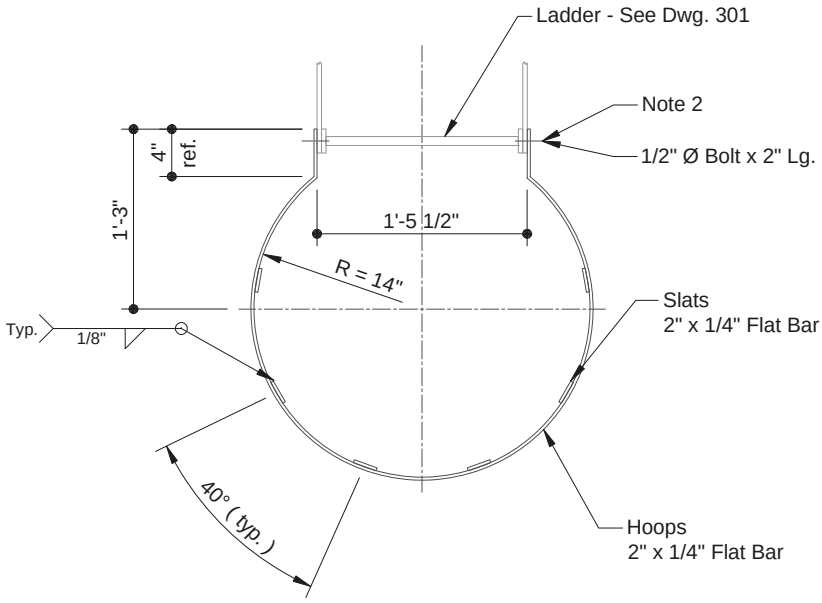

Section 'A'

NOTES:

1. Refer to Dwg 301 for ladder detail.
2. Provide 9/16" Ø holes in hoop to connect ladder / siderail support bracket. Maximum spacing 4'-0".
3. Refer to Dwg. 311-B for fabrication details at individual ladder cage section.

Material Specification

- Flat Bar - ASTM A36 or equal
- Fasteners - ASTM A307 - Galvanized

Finish (unless otherwise noted)

- Zinc Coating (hot dip galvanize) per ASTM A123

Project:
CITY OF ROCKWALL, TEXAS
2.0 MG ELEVATED WATER STORAGE TANK

No.:	Date:	By:	Revision:

STEEL LADDER CAGE STANDARD DETAILS

Contractor:
LANDMARK
Landmark Structures I, LP
1665 Harmon Road Fort Worth, Texas, 76177
Tel: (817) 439-8888 Fax: (817) 439-9001

Design:	Dwn:	Job Number:
JEG	DK	1190
Chk:	Alloc:	Dwg. Number:
JEG	24 - 2	311 - A
Issued Date:	Scale:	
06 / 07	N.T.S.	

THE TS RAIL

Is die extruded of high strength aluminum alloy in a unique, patented design shape geared to maximum safety and easy installation.

Front portion of the rail incorporates wheel guides for operating alignment of the trolley on the rail. The bearing wall surface for the brake pawl has as a secondary safety feature, protruding stops die formed at 12" increments. This feature is valuable under wet or possible oily conditions while engaging the trolley brake pawl on the bearing surface.

Back portion of the TS rail features a continuous slot designed to retain the hex head of a 3/8" bolt assembly...bolts used for clamping the rail to the supporting structure and interconnecting the rail sections with splice channels. The slot arrangement allows the clamps to be located to suit the attachment spacing without special drilling or in-field alterations.

All rail sections -- with the exception of the bottom and top rails -- may be reversed or interchanged, since protrusion stops are identical in both directions.

The bottom rail is end chamfered for smoother entry of the trolley and equipped to retain the ice -- guard (optional). The top rail is fitted with a bolt stop to prevent the trolley user from accidentally moving off the rail. Rail sections are normally supplied in 20' lengths, although any alternate lengths may be supplied to suit specific requirements without losing the effectiveness of the system.

Rail sections may be pulled in or out several degrees by hand during installation if a slight change of direction occurs in the supporting ladder. Ladders on curved structures, either concave or convex, can be fitted with TS rail pre - formed to a specific radius at the factory (optional).

TS rail may be extended above the top of the support ladder or structure by 3 to 4 feet to permit the climber total safety in landing himself on a platform or other structure before disengaging from the rail.

SPECIFICATIONS TS RAIL

Aluminum alloy : 6063 - T6
Extrusion : 2 3/16" wide by 1 7/16" deep
Tensile strength : 30,000 PSI.
Standard length : 20 feet
Protrusion die formed stops : 3/8" x 1" x 3/32" every 12 inches
Continuous C shaped slot at back of rail confines hex head bolts for attachment of rail to rung.

SPLICE CHANNEL

Aluminum alloy : 6063 - T5
Extrusion : 1 13/32" wide x 15/16" deep x 8" long
Tensile strength : 21,000 PSI.

MOUNTING BRACKETS

Die formed of C - 1020 HRS.
Tensile strength : Approximately 65,000 PSI.
Hot dipped galvanized to ASTM - A - 153

CAP SCREWS

3/8" - 16 x 1" grade 5 hex head cap screw. Lock washer and hex head nut. Hot dipped galvanized to ASTM - A - 153.
Weight : Rail and attaching parts, approximately 1.15 pounds per foot.

TS TROLLEY

Is die extruded of high strength aluminum alloy. Precision machined in jigs to provide center slot and pin hole for brake pawl and wheel wells for the delrin wheels. The wheels provide quiet, friction less operation on the rail, climbing or descending.

Chrome plated steel brake pawl is confined to the center slot with a press fitted stainless steel pin. The double stainless steel spring construction provides immediate braking of the trolley brake pawl if the climber relaxes or slips during ascent or descent.

The climber is connected from the brake pawl to the trolley with a special hot dip galvanized screw pin shackle and a forged snap hook with a quick action thumb release. The snap hook of the trolley connects directly to the center front D - ring of the climbers' harness.

The trolley weight is negligible and causes no restriction of maneuverability. If the climber wishes to disengage himself from the trolley at any location on the rail, the trolley will remain in position through the normal spring - brake action of the brake pawl. If the climber is leaning back slightly to release the brake during the climbing operation, there is no need to adjust or move the trolley with the hands.

Any number of climbers may use one TS installation at the same time if each climber is equipped with a TS trolley and harness.

SPECIFICATIONS TS TROLLEY

Trolley body : Aluminum alloy 6063 - T6 extrusion accurately machined in special jigs.
Tensile strength : 30,000 PSI.

LOCKING PAWL

C - 1020 HRS plate with tensile strength of approximately 65,000 PSI. finished with nickel chrome plating. Secure to trolley body by 3/8" Ø type 304 stainless steel pin. Tensile strength : 90,000 PSI.

PAWL SPRINGS

Dual springs formed from .060" x 1/2" flat stainless steel spring stock secured to trolley body with 1/4"- 20 stainless steel machine screws.

TROLLEY WHEELS

4 delrin wheels of 0.75" Ø x 5/16" Wd. Wheels secured to the trolley body with 1/4" Ø heat treated holokrome shoulder screws. Nickel chrome plated.

SHACKLE AND SNAP HOOK

A 5/16" drop forged screw pin shackle with a proof load test of 3300 lbs. is used to attach drop forged snap hook to the trolley pawl. Shackle is hot dipped galvanized. Snap hook is drop forged cadmium plated with proof load test of 5000 lbs.

Trolley weight : Approximately 3 lbs.

FULL BODY HARNESS

Is nylon body strap and work belt designed and manufactured especially for use with TS equipment. The belt meets all requirements codes and is equipped with front D - ring for attachments of lanyards or safety straps. This is primarily a climber's belt and does not encompass tool holders or other accessory devices.

SPECIFICATIONS FULL BODY HARNESS

Belt body pad of 4" width latex impregnated nylon webbing. Body belt of 1 3/4" width nylon webbing using drop forged frame and tongue type buckle. Buckle holes reinforced with grommets. Copper rivets ... nylon washers under rivet heads.

FRONT D RING

Steel D - ring with proof load test of 5000 lbs. for attachment to snap hook.

BACK D RING

One drop forged circle D ring with proof load test of 5000 lbs. for attachment of safety straps or lanyards.
Full body harness weight : approximately 4 lbs.

Rail Sections

Location	Linear Feet	Material
Pedestal Temporary	28	Aluminum
Pedestal Permanent	57	Aluminum
Floor Manhole	8	Aluminum
Access Tube Interior	62	Aluminum
Access Tube Exterior	47	Aluminum

Accessories

Item	Number
Trolley	3
Full Body Harness	3
Ladder Ups	2

Project:

CITY OF ROCKWALL, TEXAS

2.0 MG ELEVATED WATER STORAGE TANK

No.:	Date:	By:	Revision:

SAFETY CLIMB & HARNESS

Contractor:

LANDMARK
Landmark Structures I, LP
1665 Harmon Road Fort Worth, Texas, 76177
Tel: (817) 439-8888 Fax: (817) 439-9001

Design:	Dwn:	Job Number:
JEG	DK	1190
Chk: JEG	Alloc: 8 - 10/12	Dwg. Number: 313 - B
Issued Date: 06 / 07	Scale: N.T.S.	

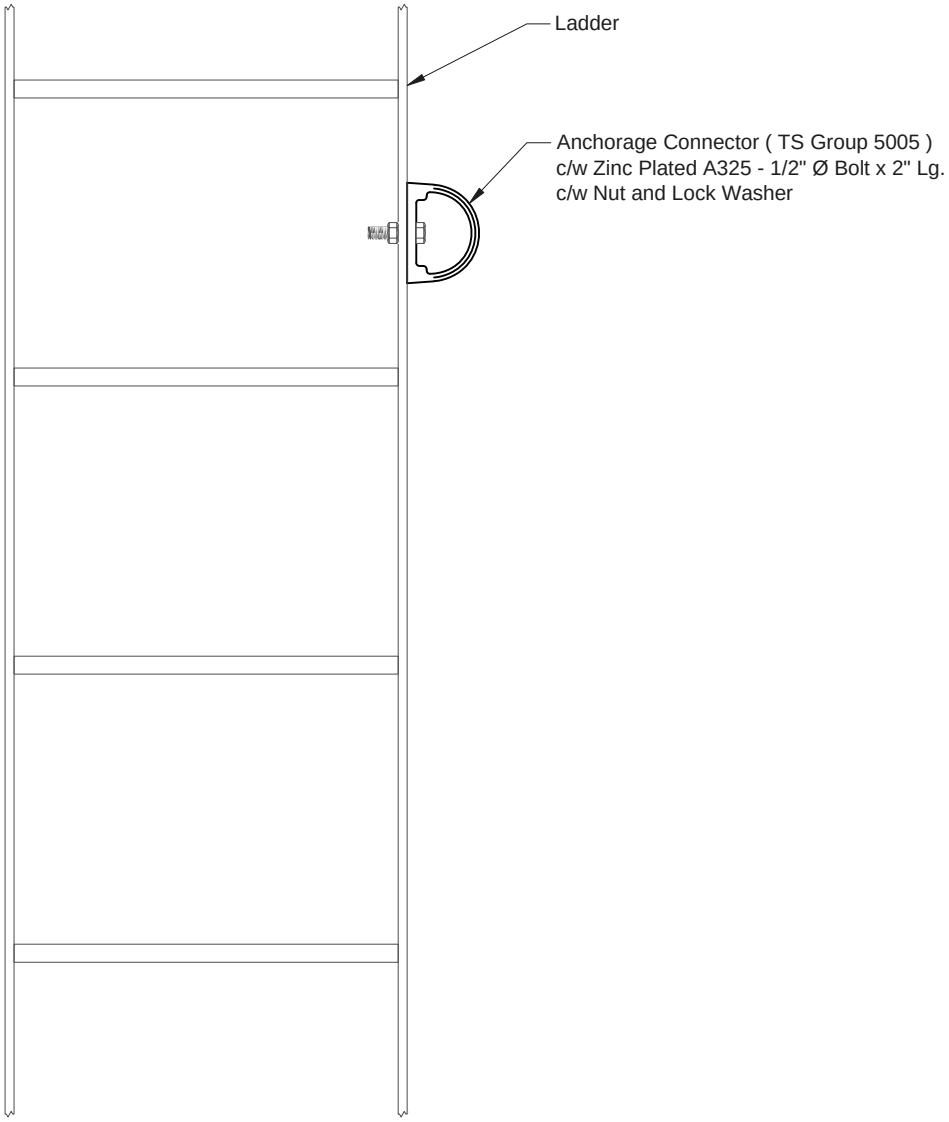

Pc's Required - 6

NOTES:

1. Safety lanyard attachement to be installed at the following locations
   - Landing(s)
   - Floor Manhole
   - Access Tube Top Hatch(es)

Project:

CITY OF ROCKWALL, TEXAS

2.0 MG ELEVATED WATER STORAGE TANK

No.:	Date:	By:	Revision:

SAFETY LANYARD ATTACHMENT

Contractor:

LANDMARK

Landmark Structures I, LP
1665 Harmon Road Fort Worth, Texas, 76177
Tel: (817) 439-8888 Fax: (817) 439-9001

Design:	Dwn:	Job Number:
JEG	DK	1190
Chk: JEG	Alloc: 25 - 6	Dwg. Number: 314
Issued Date: 06 / 07	Scale: N.T.S.	

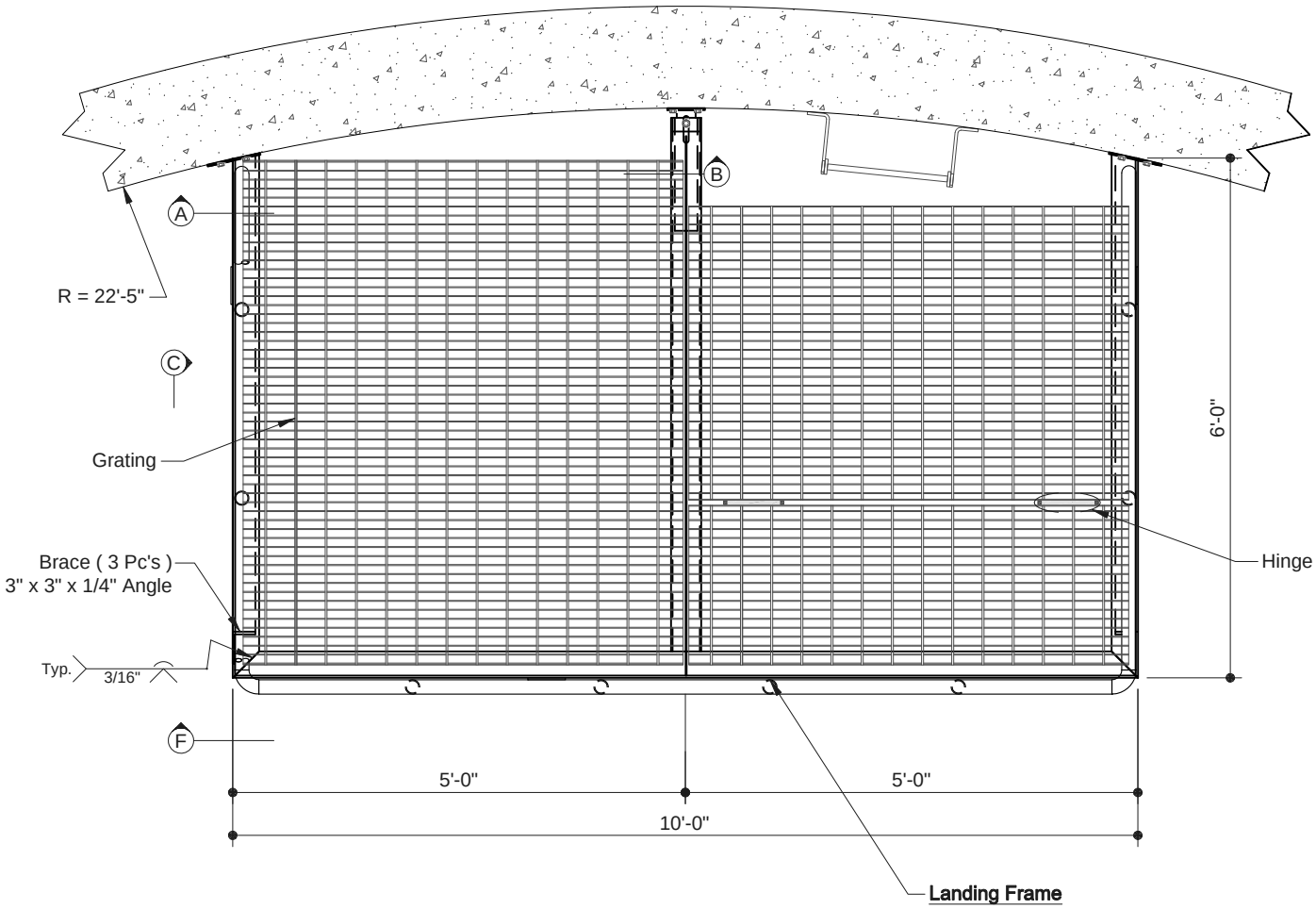

Plan

Pc's Required - 1

NOTES:

1. Allowable Live Load = 100 psf

Material Specification

- Frame & Brace - ASTM A36 / A500 Gr. B or equal
- Handrail - ASTM A519 - 1.9" Ø x 0.125" Wall Tubing
- Grating - 1 1/4" x 1/8" Bearing Bar @ 1 3/16" c/c
- Fasteners - ASTM A307 - Plated
- Expansion Anchor - FS FF - S - 325, Group II, Type 4, Class I, (zinc plated)
- Hinge - ASTM A312, Type 304L
- Welding Electrode - E70xx

Finish

- Zinc Coating (hot dip galvanize) per ASTM A123 A385

Drawing References

- 315 - A2 - Intermediate Landing Sections & Details

Project:
CITY OF ROCKWALL, TEXAS
2.0 MG ELEVATED WATER STORAGE TANK

No.	Date	By	Revision
A	13/Nov/07	KKC	ALL

INTERMEDIATE LANDING PLAN

Contractor:
LANDMARK
Landmark Structures I, LP
1665 Harmon Road Fort Worth, Texas, 76177
Tel: (817) 439-8888 Fax: (817) 439-9001

Design:	Dwn:	Job Number:
JEG	DK	1190
Chk: JEG	24 - 4	Dwg. Number: 315 - A1
Issued Date: 06 / 07	Scale: N.T.S.	

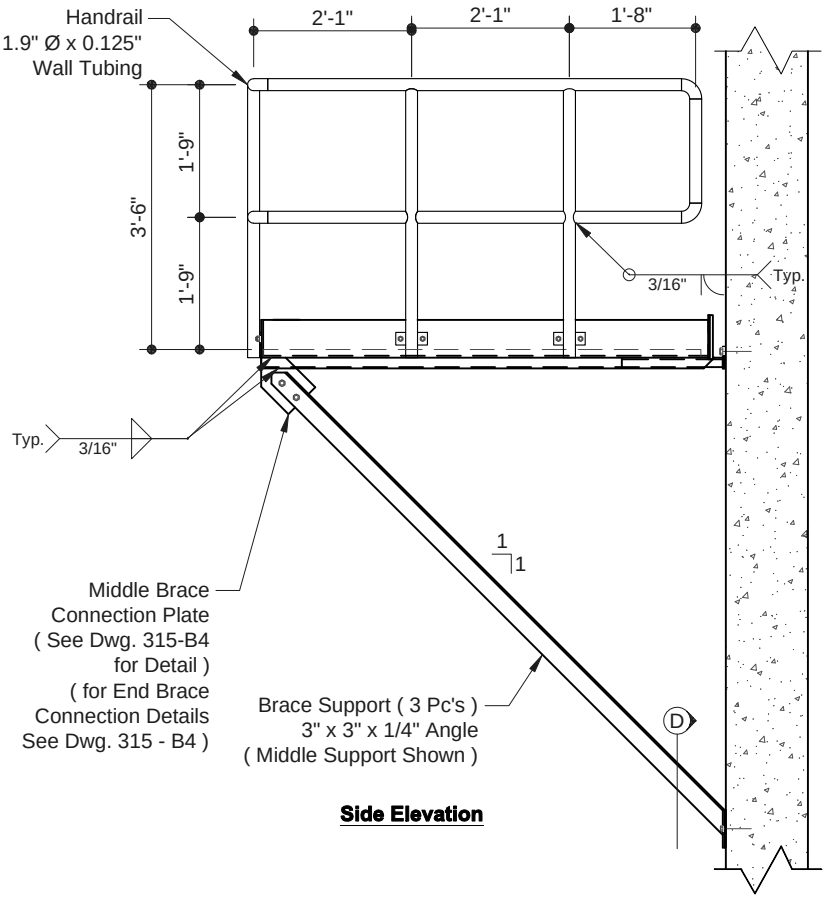

Side Elevation

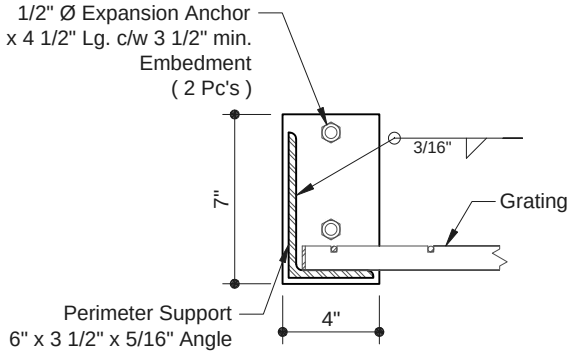

Section 'A'

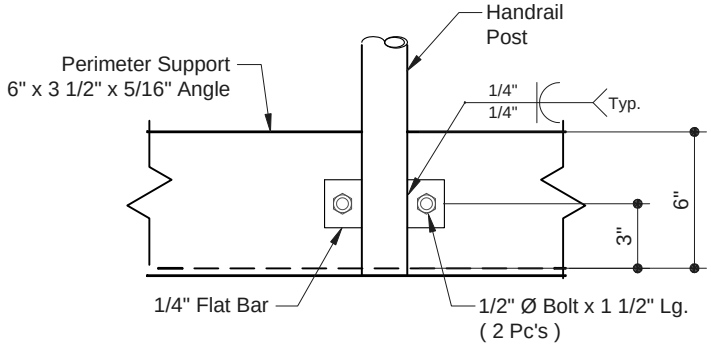

View 'C'

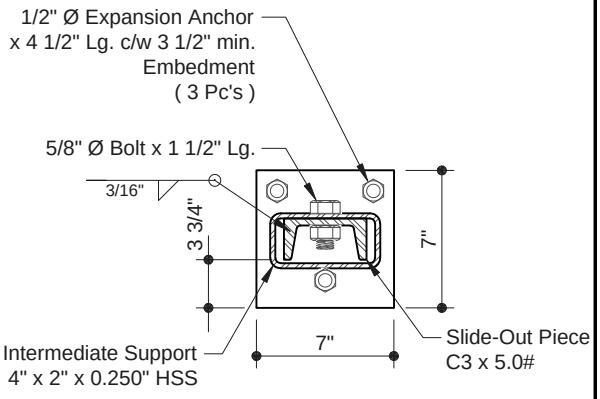

Section 'B'

Project:

CITY OF ROCKWALL, TEXAS

2.0 MG ELEVATED WATER STORAGE TANK

No.	Date:	By:	Revision:
A	13/Nov/07	KKC	Larger Intermediate landing

INTERMEDIATE LANDING ELEVATION & SECTIONS

Contractor:

LANDMARK

Landmark Structures I, LP
1665 Harmon Road Fort Worth, Texas, 76177
Tel: (817) 439-8888 Fax: (817) 439-9001

Design: **JEG**	Dwn: **DK**	Job Number: **1190**
Chk: **JEG**	24 - 4	Dwg. Number: **315 - A2**
Issued Date: **06 / 07**	Scale: **N.T.S.**	

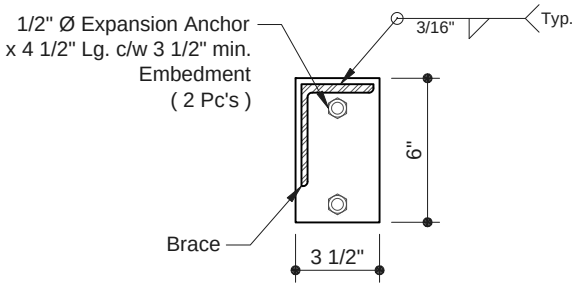

Section 'D'

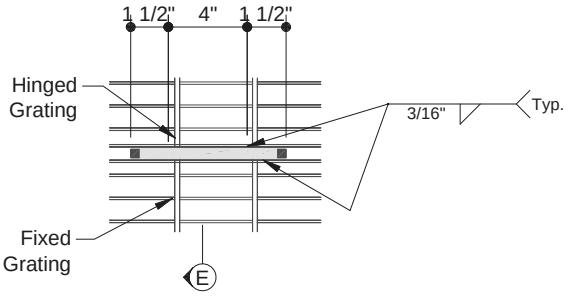

Hinge Plan

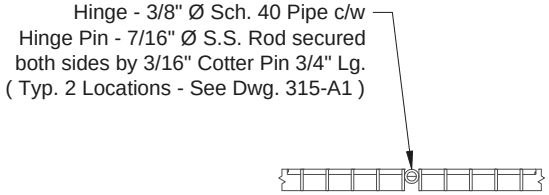

Section 'E'

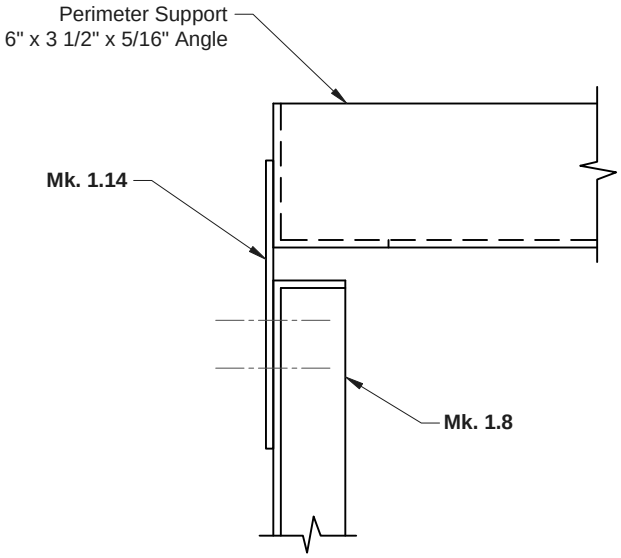

Section 'F'

Project:

CITY OF ROCKWALL, TEXAS

2.0 MG ELEVATED WATER STORAGE TANK

No.:	Date:	By:	Revision:

INTERMEDIATE LANDING ELEVATION & SECTIONS

Contractor:

LANDMARK

Landmark Structures I, LP
1665 Harmon Road Fort Worth, Texas, 76177
Tel: (817) 439-8888 Fax: (817) 439-9001

Design:	Dwn:	Job Number:
JEG	DK	1190
Chk: JEG	24 - 4	Dwg. Number: 315 - A3
Issued Date: 06 / 07	Scale: N.T.S.	

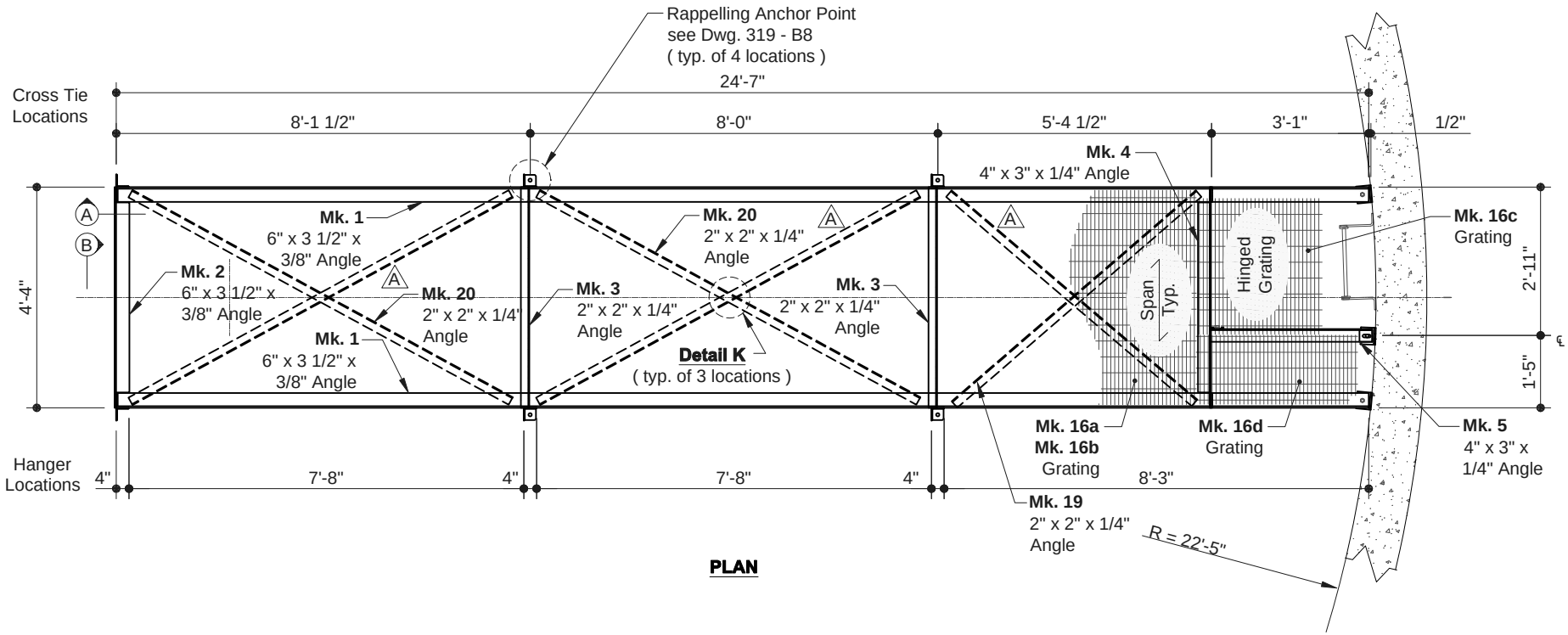

PLAN

NOTES:

1. Anchor each grating at 4 locations.
2. Rappelling anchor point Ultimate Load = 9,000 lbs vertical.
   Reduce by required safety factor to determine Safe Working Load.

Material Specification

- Frame & Brace - ASTM A36 / A500 Gr. B or equal
- Handrail - ASTM A519 - 1.9" Ø x 0.125" Wall Tubing
- Grating - 1" x 1/8" Bearing Bar @ 1 3/16" c/c
- Fasteners - ASTM A307 - Plated (5/8" Ø Unless Otherwise Specified)
- Expansion Anchor - 1/2" Ø FS FF - S - 325, Group II, Type 4, Class I, (zinc plated)
- Hinge - ASTM A312, Type 304L
- Electrodes - E70xx

Finish

- Zinc Coating (hot dip galvanize)
  per ASTM A123 A385

Project:

CITY OF ROCKWALL, TEXAS

2.0 MG ELEVATED WATER STORAGE TANK

No.:	Date:	By:	Revision:
A	15/Nov/07	KKC	Added Cross Bracing

TOP LANDING (46' Ø PEDESTAL)
PLAN

Contractor:

LANDMARK

Landmark Structures I, LP
1665 Harmon Road Fort Worth, Texas, 76177
Tel: (817) 439-8888 Fax: (817) 439-9001

Design: JEG	Dwn: DK	Job Number: 1190	
Chk: JEG	Alloc: 24 - 3	Dwg. Number: 319 - A1	
Issued Date: 06 / 07	Scale: N.T.S.		

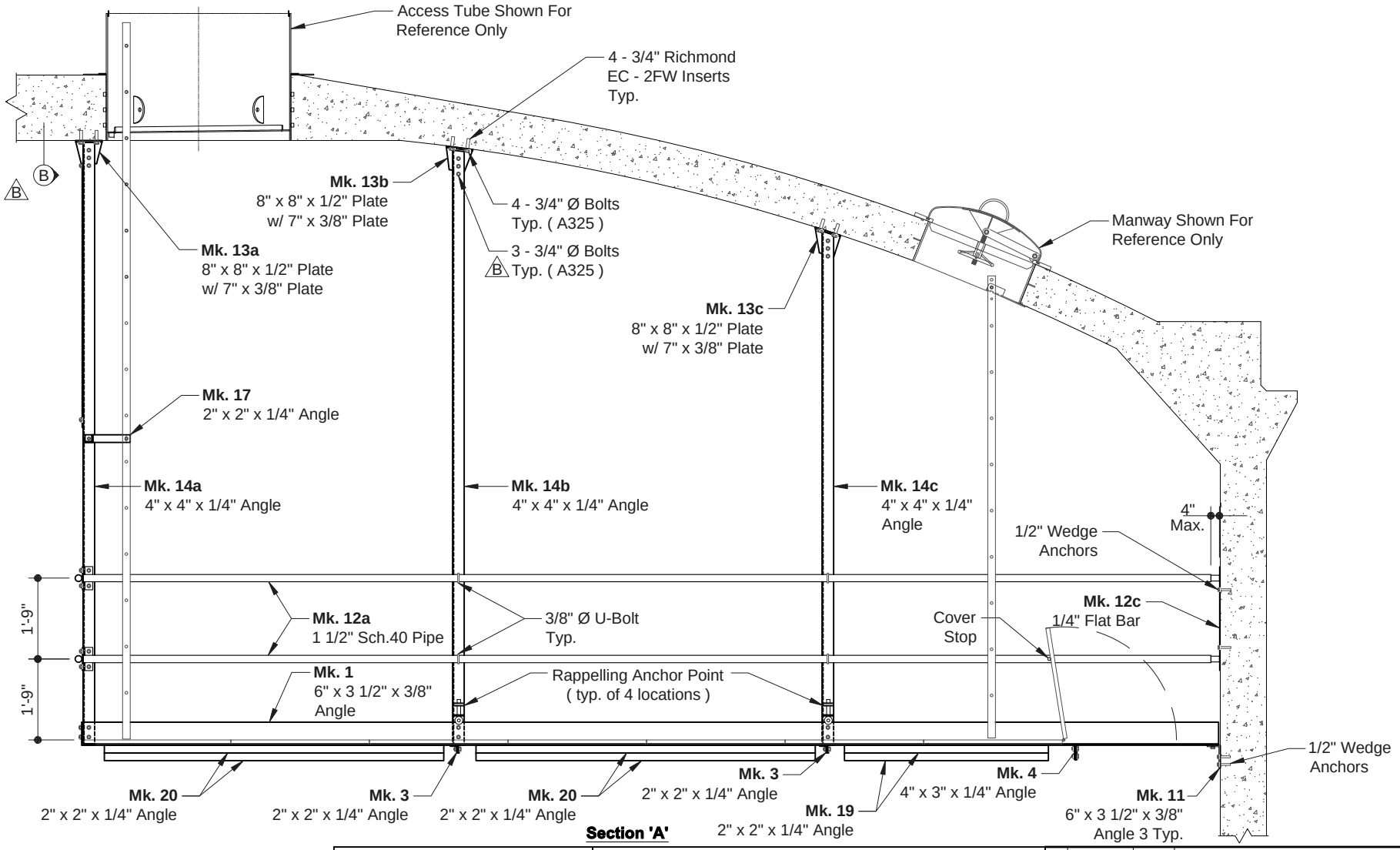

Section 'A'

Project:

CITY OF ROCKWALL, TEXAS

2.0 MG ELEVATED WATER STORAGE TANK

No.:	Date:	By:	Revision:
B	28/May/08	ET	Revised Hanger Details
A	15/Nov/07	KKC	All

TOP LANDING (46' Ø PEDESTAL) SECTION

Contractor:

LANDMARK
Landmark Structures I, LP
1665 Harmon Road Fort Worth, Texas, 76177
Tel: (817) 439-8888 Fax: (817) 439-9001

Design: JEG	Dwn: DK	Job Number: 1190	
Chk: JEG	Alloc: 24 - 3	Dwg. Number: 319 - A2	
Issued Date: 06 / 07	Scale: N.T.S.		

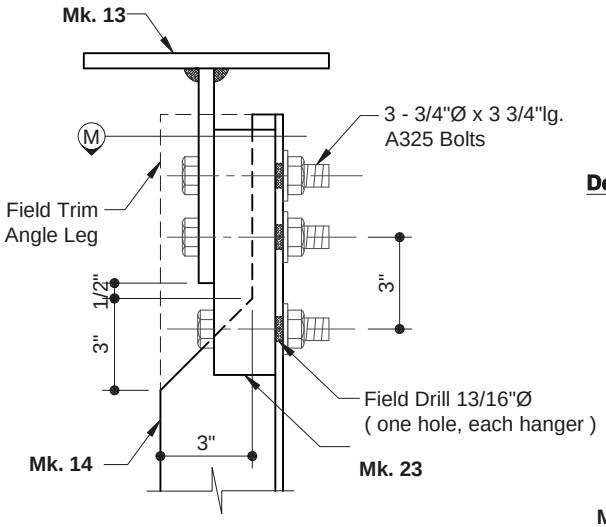

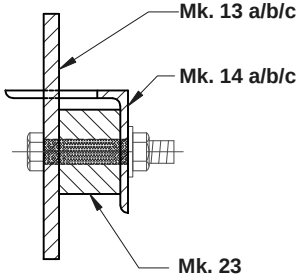

Section M

Detail 'L' (B)
(typ. 6 locations)

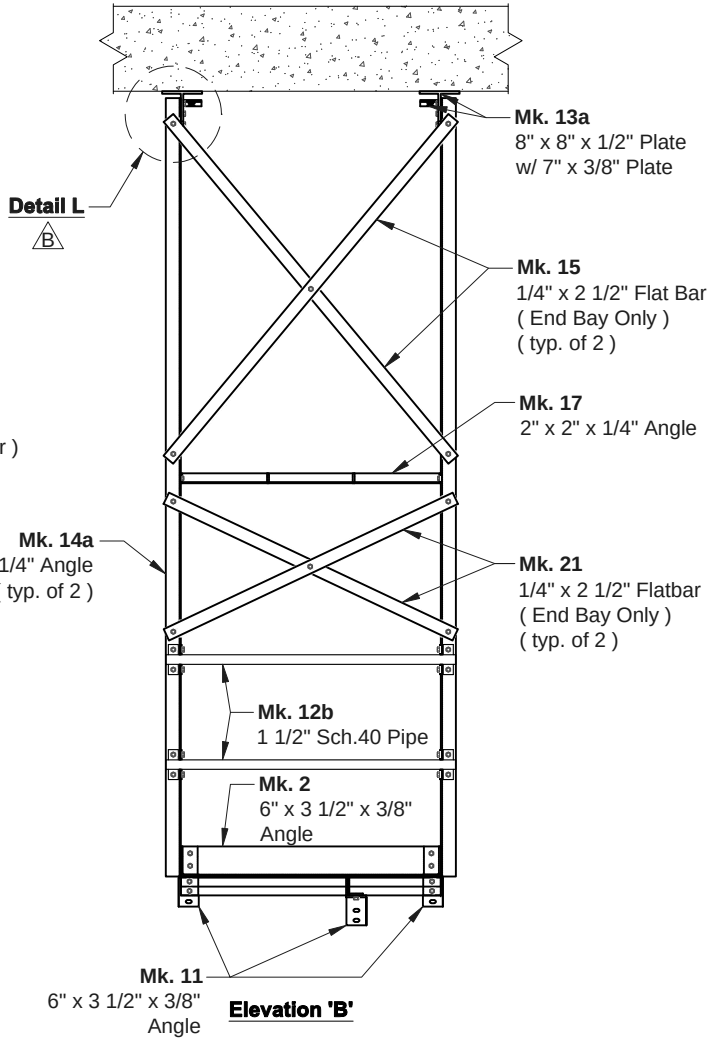

Elevation 'B'

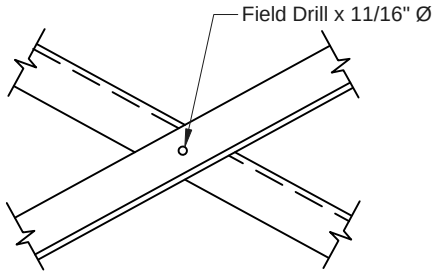

Detail 'K'

Project:

CITY OF ROCKWALL, TEXAS

2.0 MG ELEVATED WATER STORAGE TANK

No.:	Date:	By:	Revision:
B	28/May/08	ET	Detail 'L' added
A	15/Nov/07	KKC	All

TOP LANDING (46' Ø PEDESTAL) ELEVATION

Contractor:

LANDMARK
Landmark Structures I, LP
1665 Harmon Road Fort Worth, Texas, 76177
Tel: (817) 439-8888 Fax: (817) 439-9001

Design: JEG	Dwn: DK	Job Number: 1190
Chk: JEG	Alloc: 24 - 3	Dwg. Number: 319 - A3
Issued Date: 06 / 07	Scale: N.T.S.	

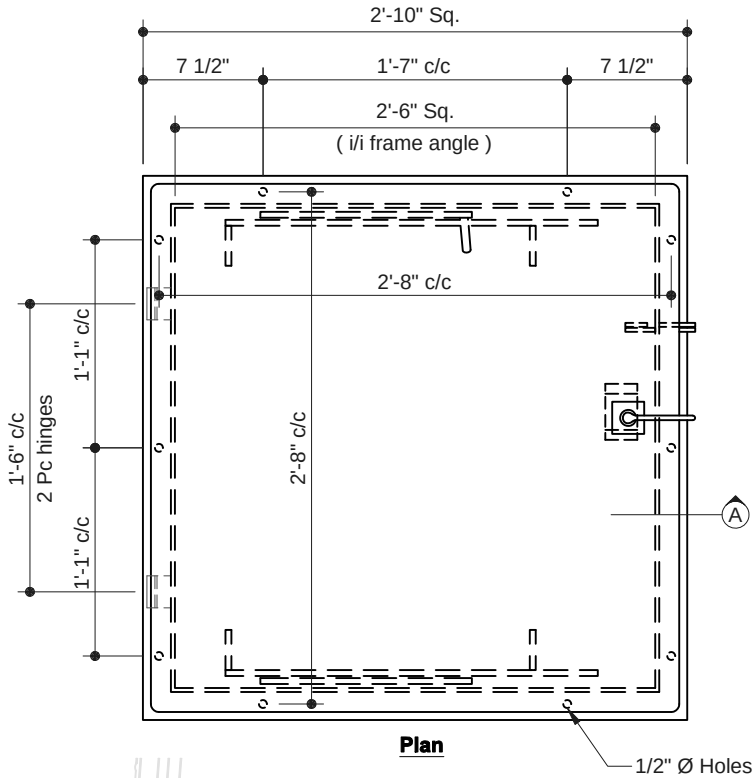

Plan

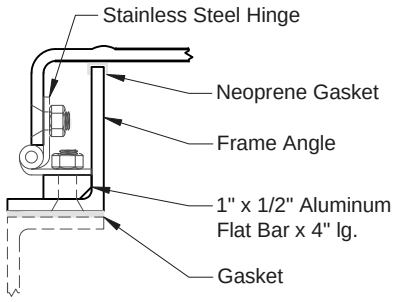

Detail 'A' - Hinge Detail

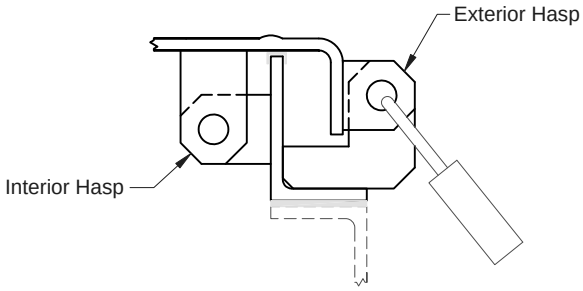

Padlock Hasp

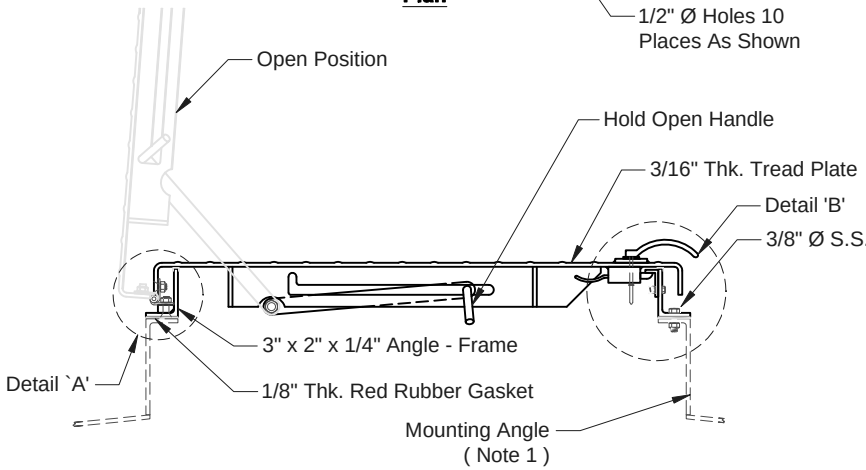

Section `A'

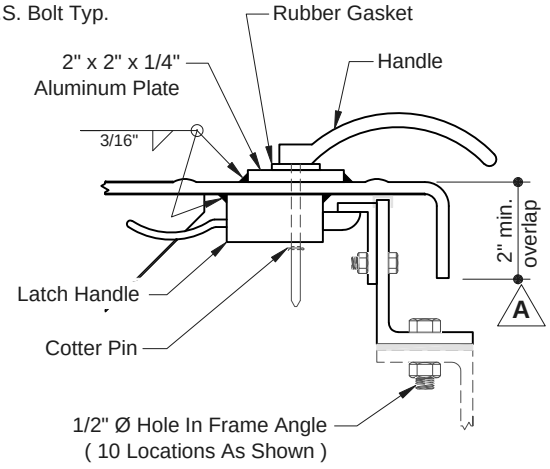

Deatil 'B' - Latch Detail

Assemblies Required - 2

NOTES:

1. Mounting Angle - fabricate, leg in at tank access & leg out at roof access.

Material Specification

- Hatch Cover - Tread plate and framing - Aluminum T6061-T651
- Latch, Hinges, Fasteners - Type 304 Stainless Steel
- Handles - Zinc Plated

Project:

CITY OF ROCKWALL, TEXAS

2.0 MG ELEVATED WATER STORAGE TANK

No.	Date	By	Revision
A	14/Mar/08	ET	Added Dimension

30" x 30" - ACCESS HATCH COVER ASSEMBLY & INSTALLATION

Contractor:

LANDMARK

Landmark Structures I, LP
1665 Harmon Road Fort Worth, Texas, 76177
Tel: (817) 439-8888 Fax: (817) 439-9001

Design: JEG	Dwn: DK	Job Number: 1190
Chk: JEG	Alloc: 24 - 8	Dwg. Number: 320 - A
Issued Date: 06 / 07	Scale: N.T.S.	

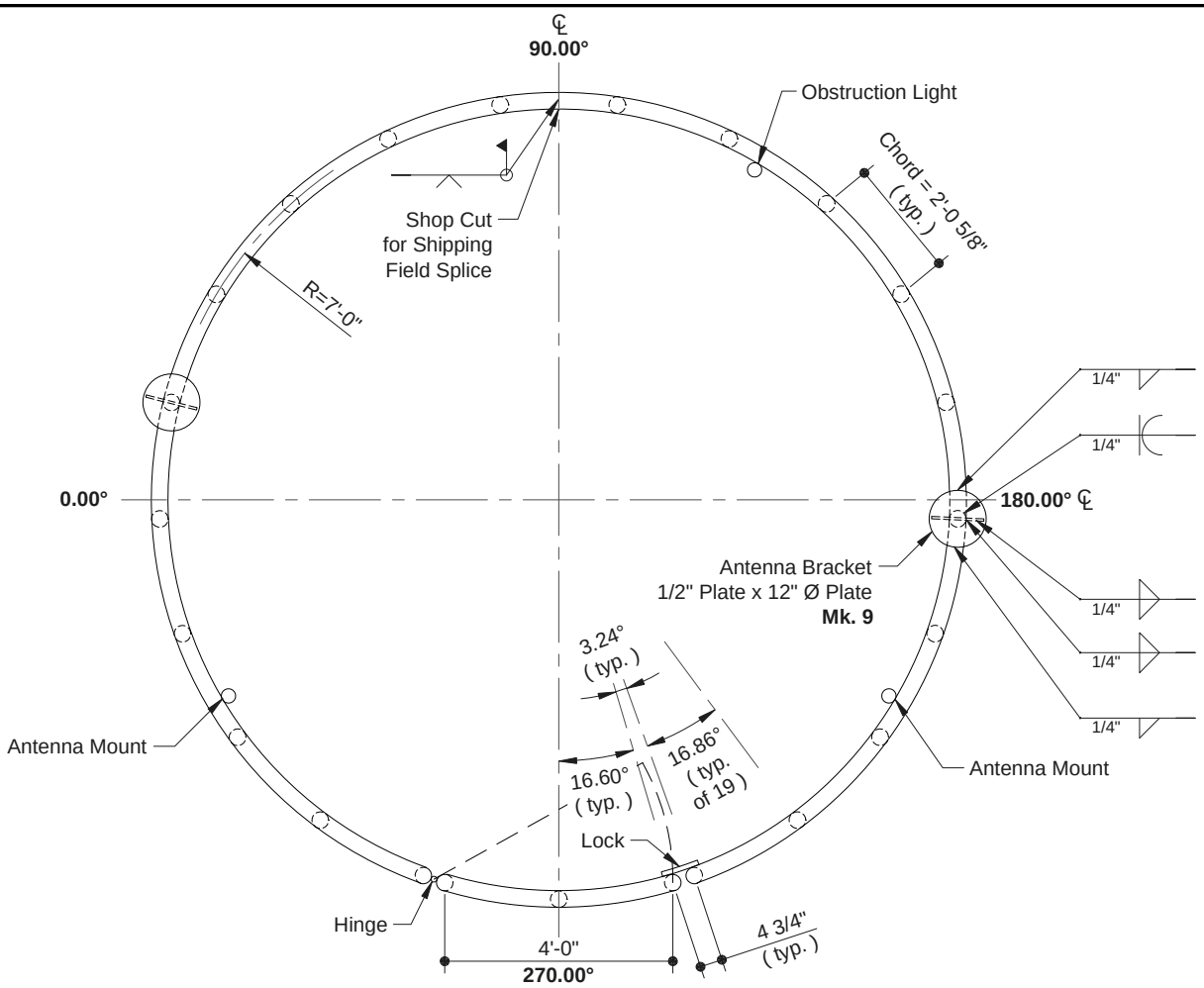

Plan

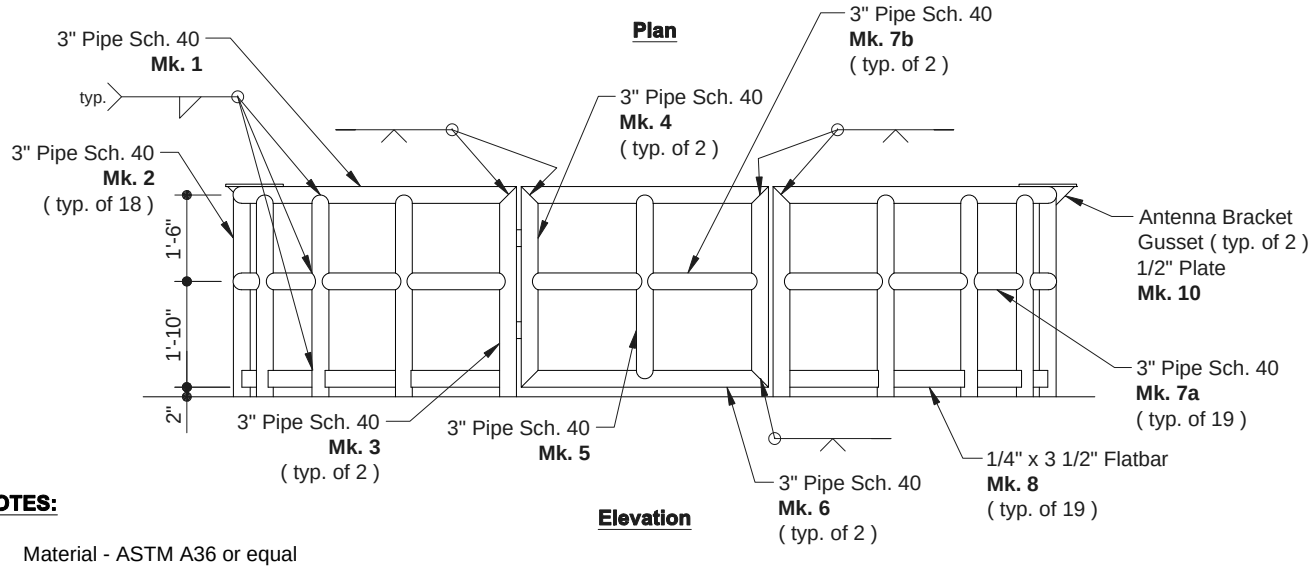

Elevation

NOTES:

1. Material - ASTM A36 or equal
2. Finish - field coating in accordance w/ contract specification.
3. Electrodes - E70xx

Project:

CITY OF ROCKWALL, TEXAS

2.0 MG ELEVATED WATER STORAGE TANK

No.:	Date:	By:	Revision:

ROOF RAIL PLAN / ELEVATION

Contractor:

LANDMARK

Landmark Structures I, LP
1665 Harmon Road Fort Worth, Texas, 76177
Tel: (817) 439-8888 Fax: (817) 439-9001

Design:	Dwn:	Job Number:
JEG	KKC	1190
Chk:	Alloc:	Dwg. Number:
DK		322 - A1
Issued Date:	Scale:	
06 / 07	N.T.S.	

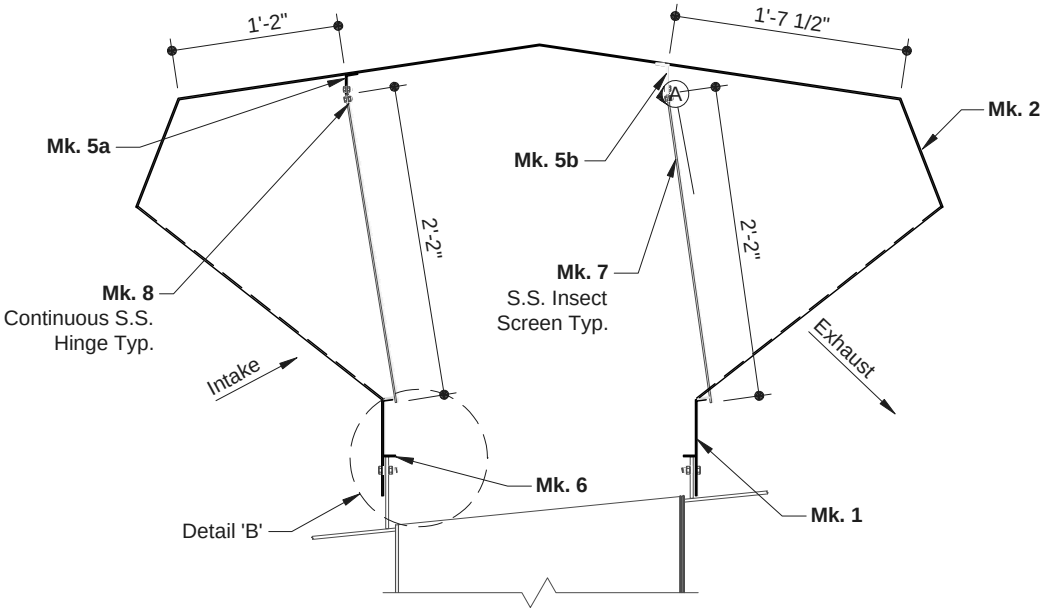

Vent Layout

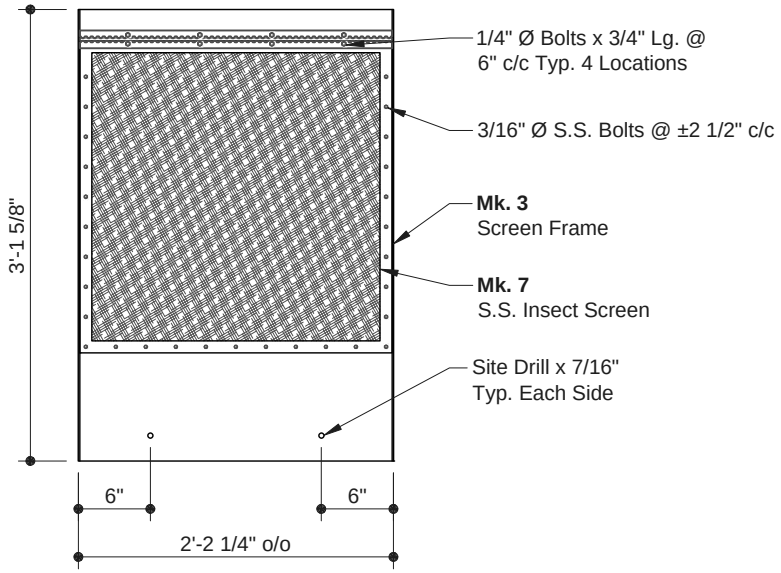

Section 'A'

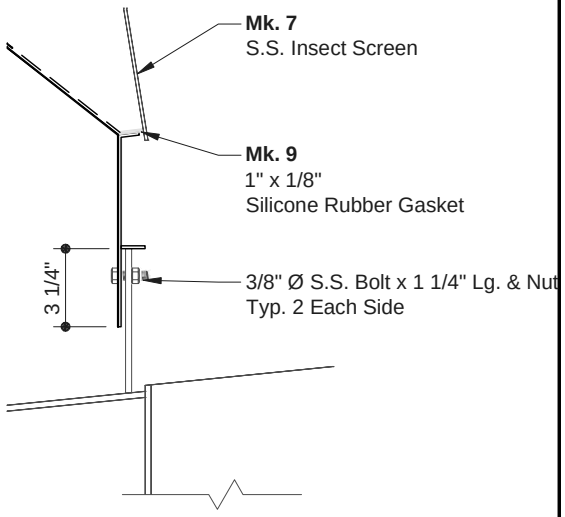

Detail 'B'

Assemblies Required - 1

NOTES:

Material Specification (unless otherwise noted)

- Plate - ASTM A-240 Type 304 Stainless Steel.
- Screen - 16 Mesh x 0.009 Type 304 Stainless Steel.
- Hinge - Type 304 Stainless Steel
- Gasket - 1/8" Silicone Rubber x 1" wide.

Project:
CITY OF ROCKWALL, TEXAS
2.0 MG ELEVATED WATER STORAGE TANK

No.	Date:	By:	Revision:

24" VENT
ASSEMBLY & INSTALLATION

Contractor:
LANDMARK
Landmark Structures I, LP
1665 Harmon Road Fort Worth, Texas, 76177
Tel: (817) 439-8888 Fax: (817) 439-9001

Design:	Dwn:	Job Number:
JEG	DK	1190
Chk:	Alloc:	Dwg. Number:
JEG	8 - 8	323 - A
Issued Date:	Scale:	
06 / 07	N.T.S.	

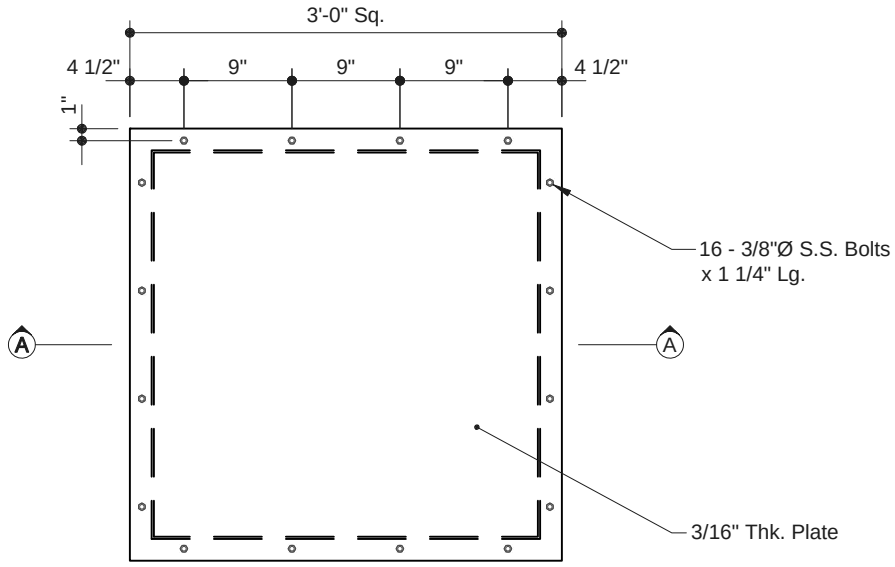

Plan

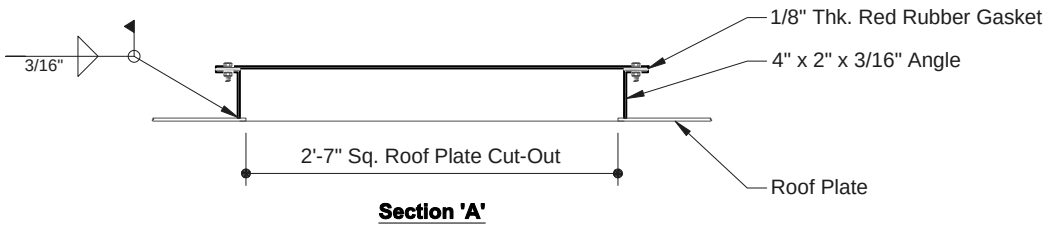

Section 'A'

Pc's Required - 1

NOTES:

1. Locate Paint Rail Access Hatch as per Dwg. 104-A1.

Material Specification

- Plates & Anlges - ASTM A36 or equal
- Fasteners - Stainless Steel Type 304

Finish

- Zinc Coating (Hot Dip Galvanize) Per ASTM A123

Drawings References

- S11 - Steel Tank - Roof Plan
- 104-A1 - Roof Section - Fabrication Details

Project:
CITY OF ROCKWALL, TEXAS
2.0 MG ELEVATED WATER STORAGE TANK

No.:	Date:	By:	Revision:

PAINT RAIL ACCESS HATCH

Contractor:
LANDMARK
Landmark Structures I, LP
1665 Harmon Road Fort Worth, Texas, 76177
Tel: (817) 439-8888 Fax: (817) 439-9001

Design:	Dwn:	Job Number:
JEG	DK	1190
Chk:	Alloc:	Dwg. Number:
JEG	24 - 6	324 - B
Issued Date:	Scale:	
06 / 07	N.T.S.	

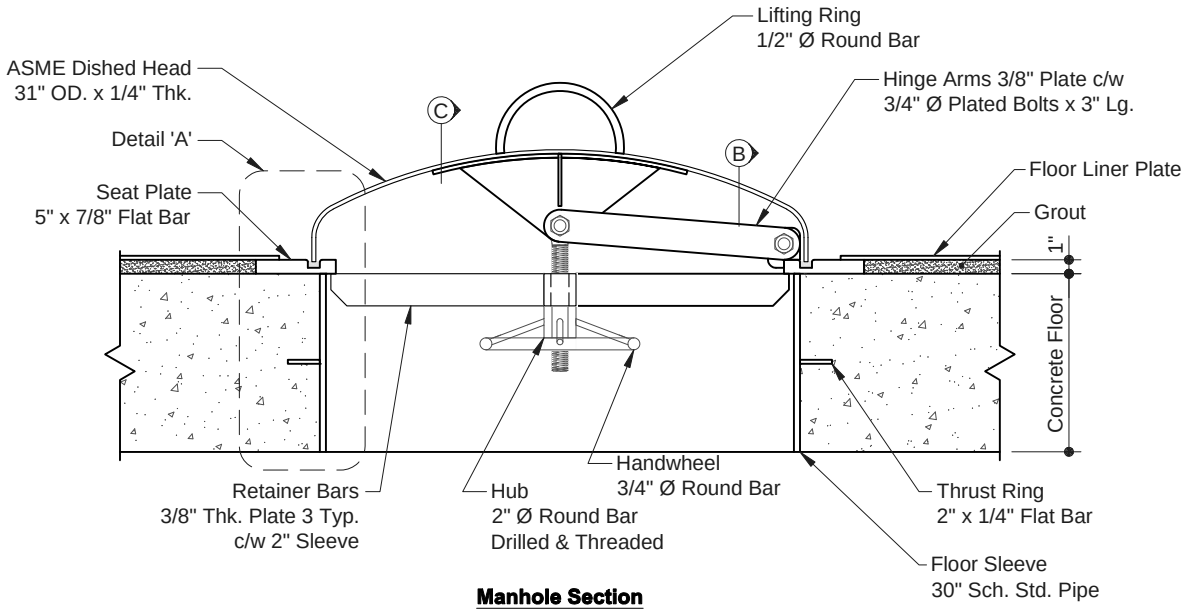

Manhole Section

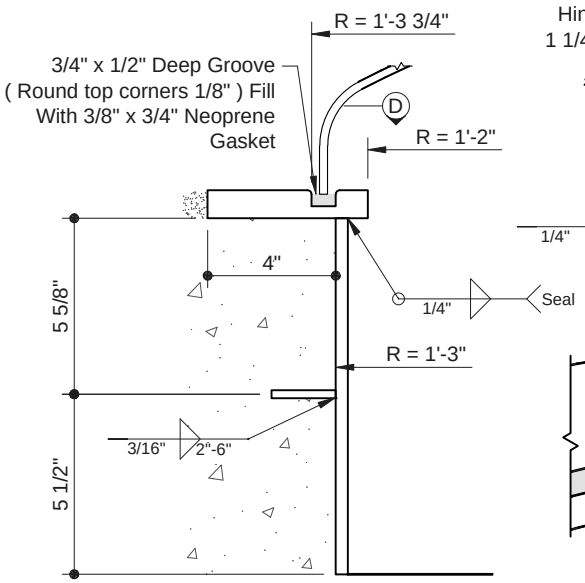

Detail 'A'

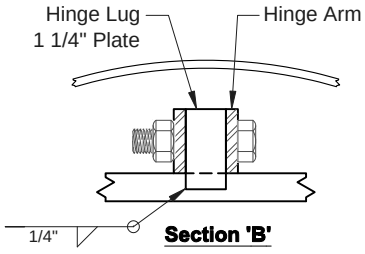

Section 'B'

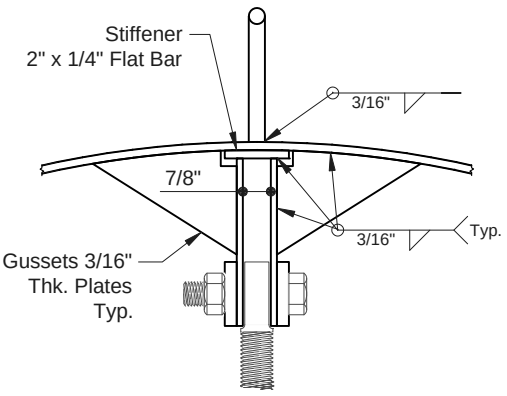

Section 'C'

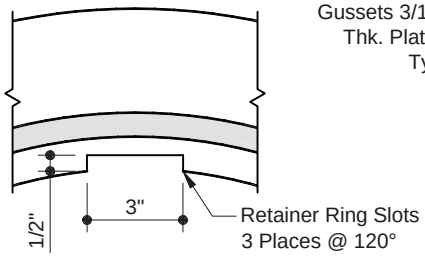

Detail 'D'

NOTES:

Material Specification

Floor Sleeve, Seat Plate, Dished Head - ASTM A36 or equal
Handwheel w/ Hub, Threaded Pin - ASTM A276 Type 304 Stainless Steel

Finish

Gusset Plate, Retainer Bar, Head, Stiffener - Zinc Coating (Hot Dip Galvanize) per ASTM A123 unless otherwise noted.

Installation

Inspect seat plate and groove. Clean and repaint as required.
Lay a continuous bead of NSF approved silicone in groove. Set gasket and clean excess silicone.
Center dished head on gasket, tighten handwheel. As tank is filled, continue to tighten handwheel.

Project:
CITY OF ROCKWALL, TEXAS
2.0 MG ELEVATED WATER STORAGE TANK

No.	Date:	By:	Revision:

30" TANK FLOOR MANHOLE ASSEMBLY & INSTALLATION

Contractor:
LANDMARK
Landmark Structures I, LP
1665 Harmon Road Fort Worth, Texas, 76177
Tel: (817) 439-8888 Fax: (817) 439-9001

Design:	Dwn:	Job Number:
JEG	DK	1190
Chk: JEG	Alloc: 24 - 7	Dwg. Number: 325 - A1
Issued Date: 06 / 07	Scale: N.T.S.	

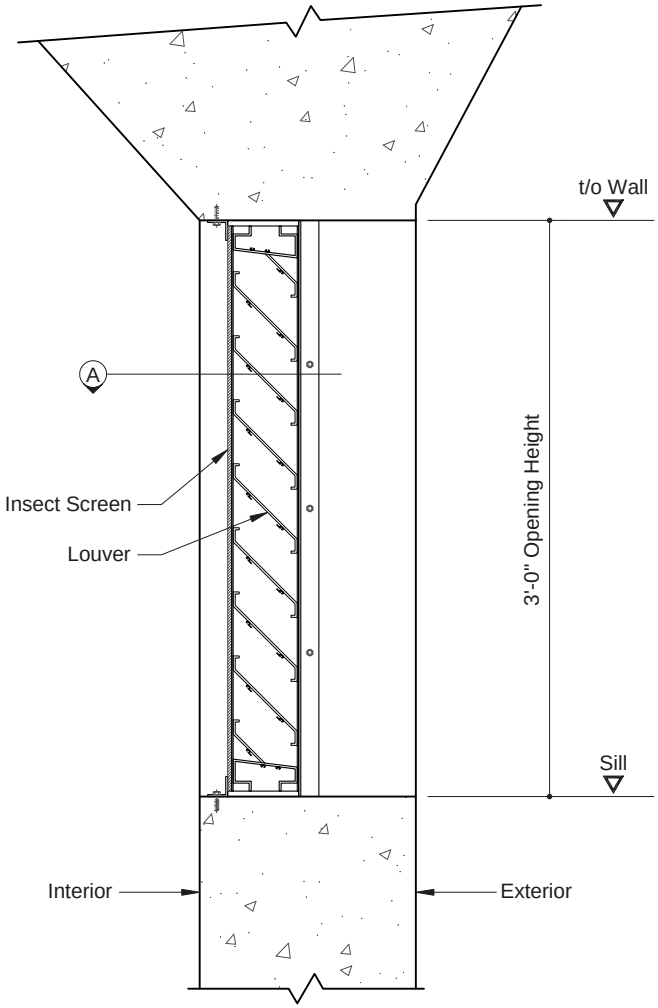

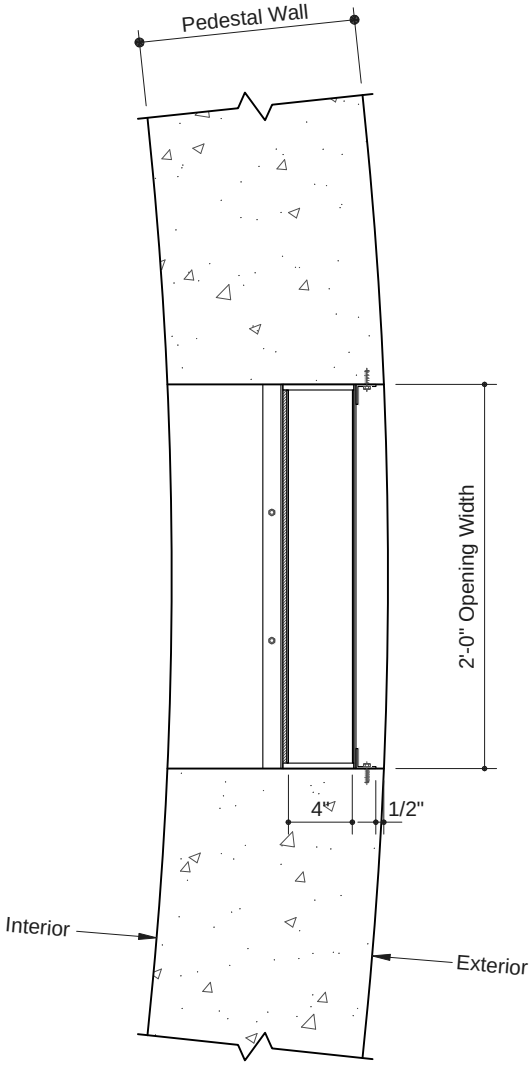

Section 'A'

NOTES:

1. Coat concrete contact surfaces with shop applied bituminous coating.

Material Specification

- Louver - Aluminum 6063 - T5 alloy - mill finish
  Size - 23 3/4" wide x 35 3/4" high x 4" (exact size)
  Construction - box frame head & sill with fixed blades @ 4" spacing
- Mounting Angles - Aluminum 6063 - T5 Alloy - Mill Finish
  Size - 1 1/4" x 1 1/4" x 1/8" - 2 Pc's @ 36", 2 Pc's @ 24"
- Insect Screen - Aluminum
  Size - 23 3/4" wide x 35 3/4" high c/w 18 x16 mesh 0.11 wire
- Fasteners - Stainless Steel
  Exterior - 1/4" expansion anchors (6 Pc's)
  Interior - 1/4" Drop in anchors with 1/4" Ø Bolts (4 Pc's)

Project:
CITY OF ROCKWALL, TEXAS
2.0 MG ELEVATED WATER STORAGE TANK

No.:	Date:	By:	Revision:

PAINT RAIL ACCESS LOUVER

Contractor:
LANDMARK
Landmark Structures I, LP
1665 Harmon Road Fort Worth, Texas, 76177
Tel: (817) 439-8888 Fax: (817) 439-9001

Design:	Dwn:	Job Number:
JEG	DK	1190
Chk:	Alloc:	Dwg. Number:
JEG	8 - 8	327 - A
Issued Date:	Scale:	
06 / 07	N.T.S.	

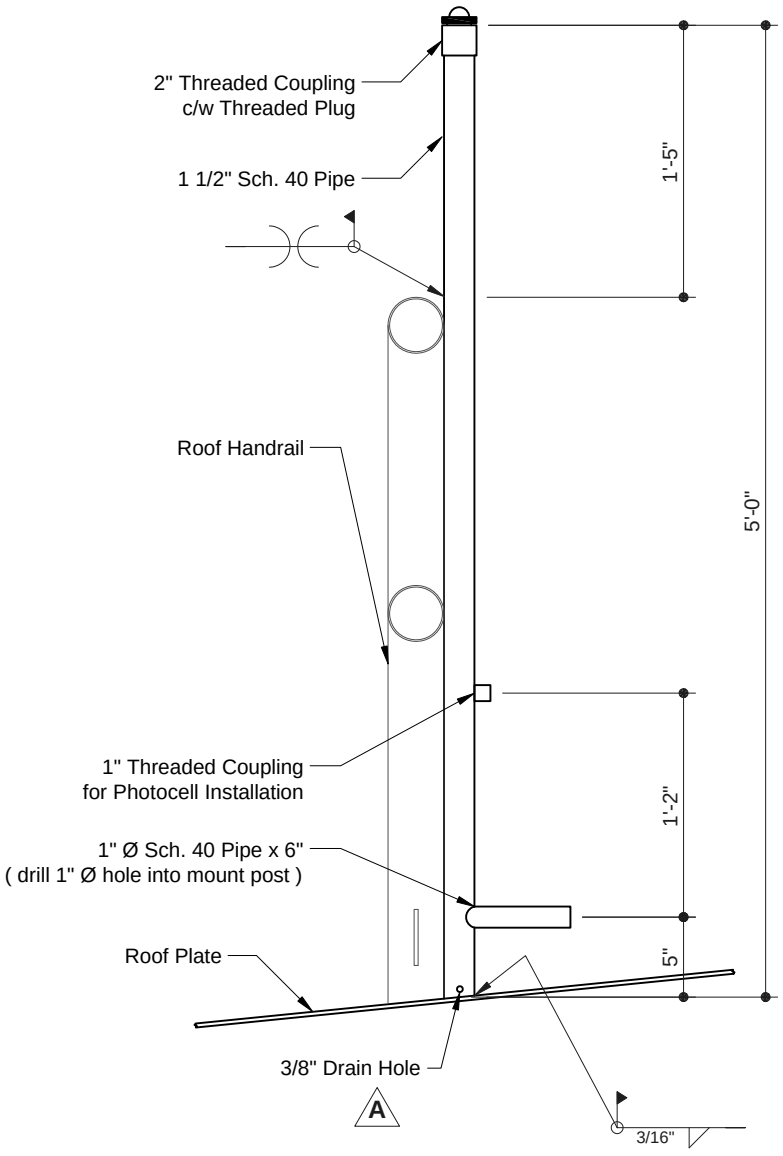

OBSTRUCTION LIGHT MOUNT

Pc's Required - 1

NOTES:

Material Specification

- Obstruction Light Mount - ASTM A36 or approved equal

Project: **CITY OF ROCKWALL, TEXAS** — **2.0 MG ELEVATED WATER STORAGE TANK**				
	A	14/Mar/08	ET	Added Drain Hole
	No.:	Date:	By:	Revision:
	OBSTRUCTION LIGHT MOUNT DETAILS			
Contractor: **LANDMARK** **Landmark Structures I, LP** 1665 Harmon Road Fort Worth, Texas, 76177 Tel: (817) 439-8888 Fax: (817) 439-9001	Design: **JEG**	Dwn: **DK**	Job Number: **1190**	
	Chk: **JEG**	Alloc: 25 - 6	Dwg. Number: **332 - A**	
	Issued Date: **06 / 07**	Scale: **N.T.S.**		

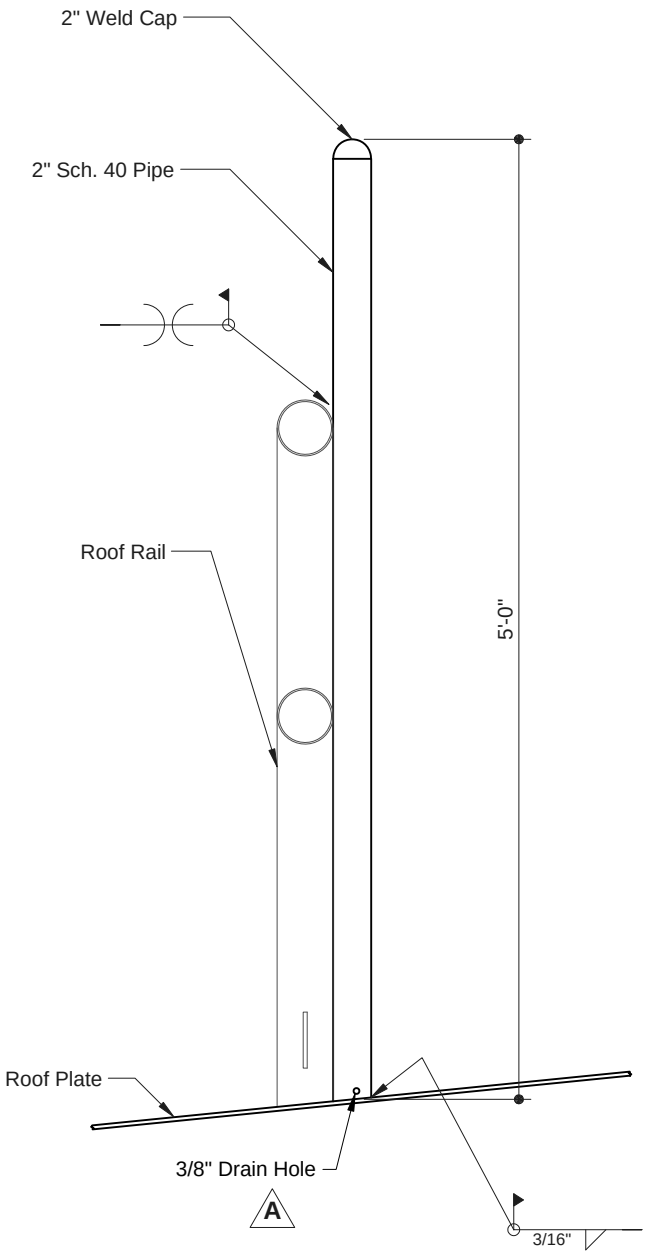

Pc's Required - 2

ANTENNA MOUNT

NOTES:

Material Specification

- Antenna Mount - ASTM A53 Grade B or approved equal

Project:

CITY OF ROCKWALL, TEXAS

2.0 MG ELEVATED WATER STORAGE TANK

No.:	Date:	By:	Revision:
A	14/Mar/08	ET	Added Drain Hole

ANTENNA MOUNT DETAILS

Contractor:

LANDMARK
Landmark Structures I, LP
1665 Harmon Road Fort Worth, Texas, 76177
Tel: (817) 439-8888 Fax: (817) 439-9001

Design:	Dwn:	Job Number:
JEG	DK	1190
Chk: JEG	Alloc: 25 - 6	Dwg. Number: 332 - B
Issued Date: 06 / 07	Scale: N.T.S.	

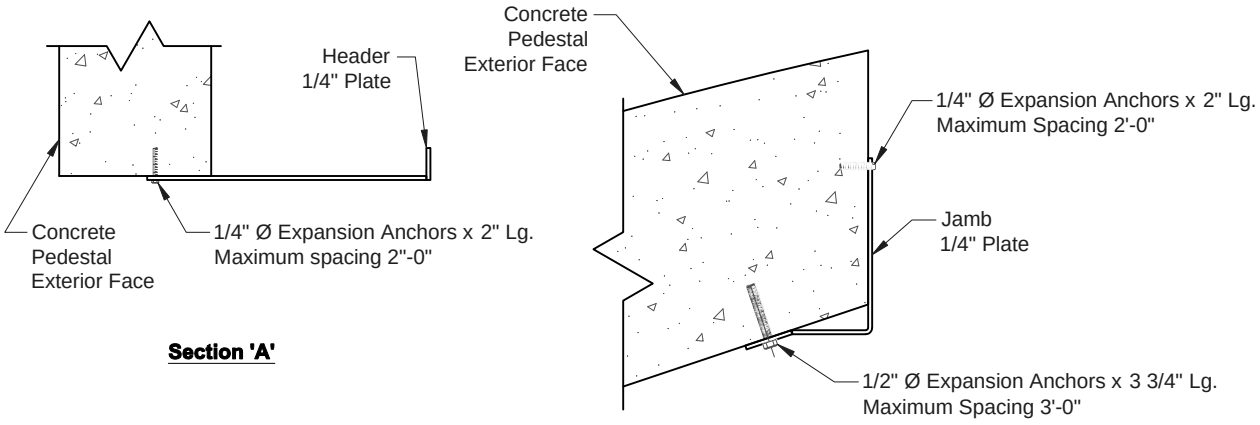

Section 'A'

Section 'B'

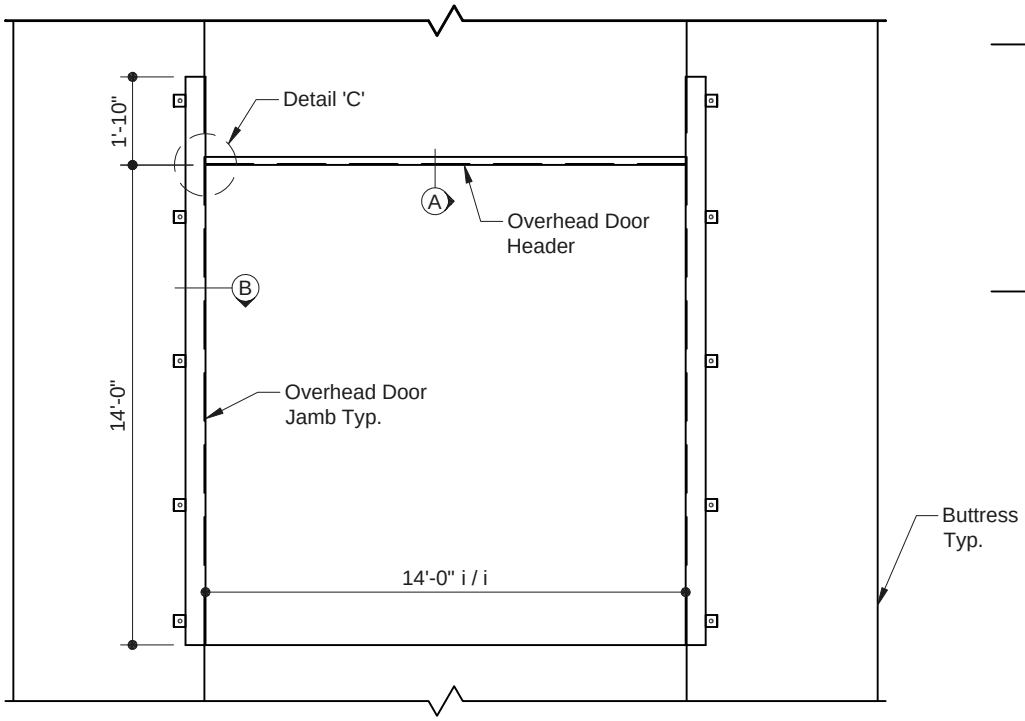

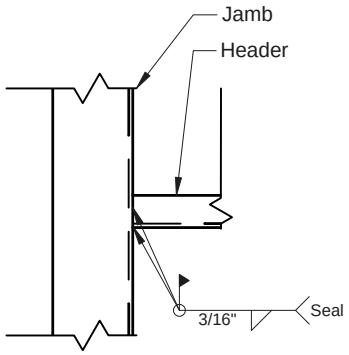

Detail 'C'

Overhead Door Opening
Interior Elevation

NOTES:

Material Specification
- Jambs & Header - C.S. Grade C33
- Expansion Anchor - FS FF - S - 325, Group II, Type 4 Class I (Zinc Plated)

Finish
- Zinc Coating (hot dip galvanize) per ASTM A123 & A385

Drawing References
- 337-B - Overhead Door Jambs & Header - Fabrication Details

Project:
CITY OF ROCKWALL, TEXAS
2.0 MG ELEVATED WATER STORAGE TANK

No.:	Date:	By:	Revision:

OVERHEAD DOOR JAMBS & HEADER ASSEMBLY & INSTALLATION

Contractor:
LANDMARK
Landmark Structures I, LP
1665 Harmon Road Fort Worth, Texas, 76177
Tel: (817) 439-8888 Fax: (817) 439-9001

Design:	Dwn:	Job Number:
JEG	DK	1190
Chk:	Alloc:	Dwg. Number:
JEG	25 - 5	337 - A
Issued Date:	Scale:	
06 / 07	N.T.S.	

V. MECHANICAL

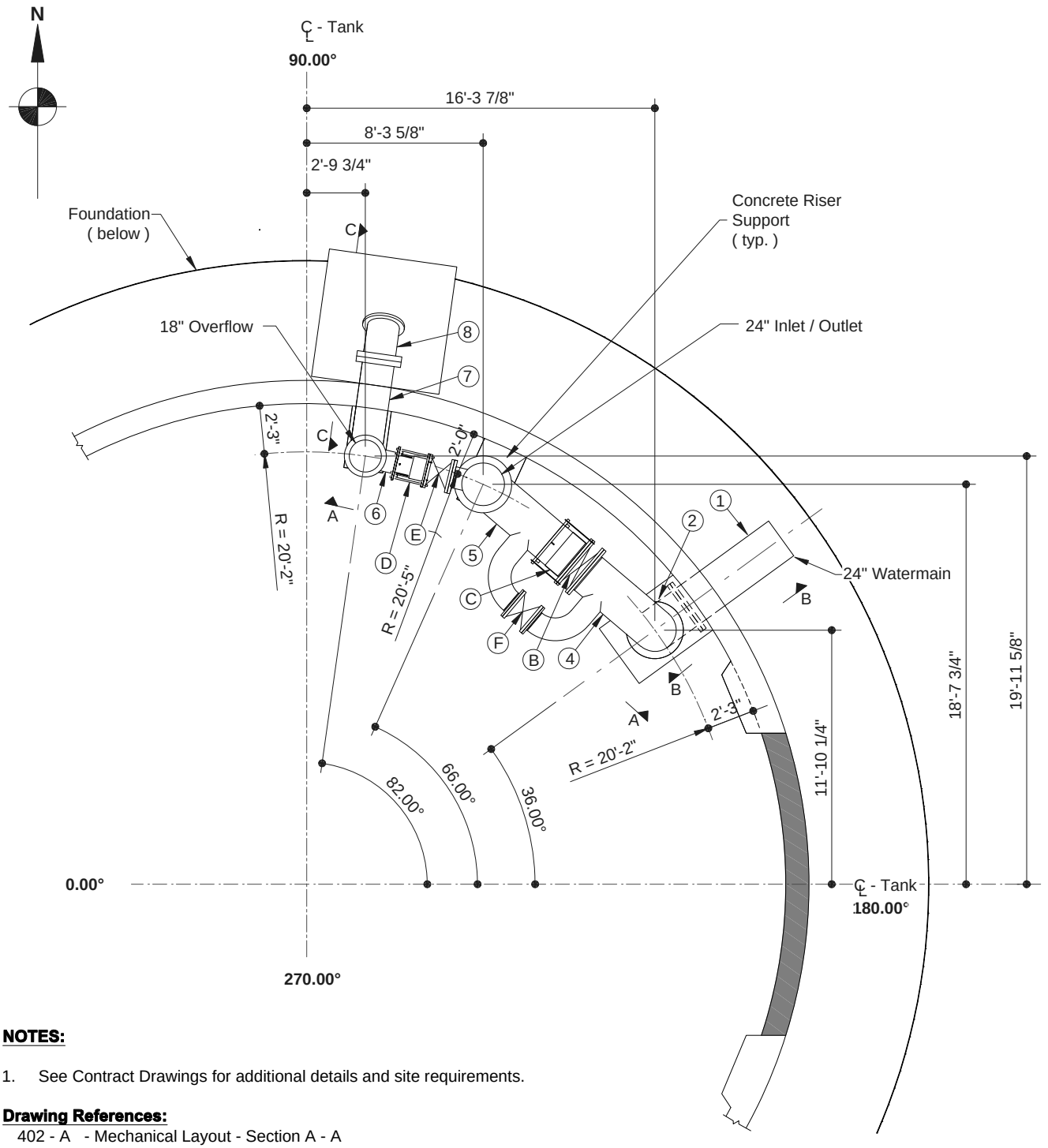

NOTES:

1. See Contract Drawings for additional details and site requirements.

Drawing References:

402 - A - Mechanical Layout - Section A - A
402 - B - Mechanical Layout - Section B - B
402 - C - Mechanical Layout - Section C - C
404 - A - Concrete Supports & Encasement - Plan
405 - A1 - Inlet / Outlet Riser - Elevation
406 - A1 - Overflow Riser - Elevation
410 - - Piping / Mechanical Equipment Legend

Project:
CITY OF ROCKWALL, TEXAS
2.0 MG ELEVATED WATER STORAGE TANK

No.:	Date:	By:	Revision:

MECHANICAL LAYOUT PLAN

Contractor:
LANDMARK
Landmark Structures I, LP
1665 Harmon Road Fort Worth, Texas, 76177
Tel: (817) 439-8888 Fax: (817) 439-9001

Design:	Dwn:	Job Number:
JEG	VP	1190
Chk:	Alloc:	Dwg. Number:
DK		401
Issued Date:	Scale:	
06 / 07	N.T.S.	

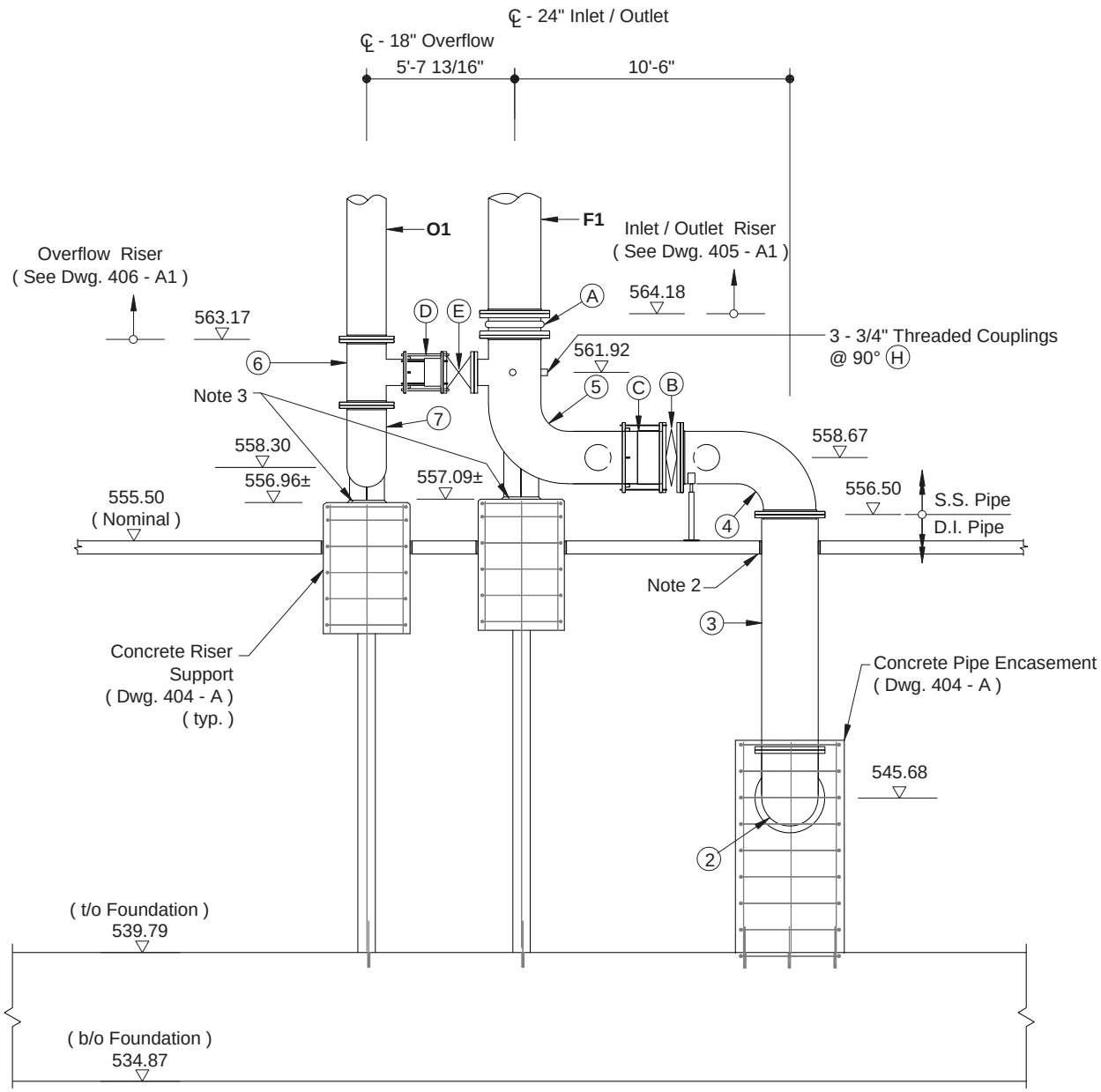

Section A - A

NOTES:

1. See Contract Drawings for additional details and site requirements.
2. 1/2" expansion joint cap strip with self leveling sealant.
3. Support base plate with 1" nonshrink grout. Install 4 pc's 3/4" expansion anchors.

Drawing References:

404 - A - Concrete Supports & Encasement - Plan
405 - A1 - Inlet / Outlet Riser - Elevation
406 - A1 - Overflow Riser Elevation
410 - Piping / Mechanical Equipment - Legend

Project:
CITY OF ROCKWALL, TEXAS
2.0 MG ELEVATED WATER STORAGE TANK

No.:	Date:	By:	Revision:

MECHANICAL LAYOUT
SECTION A - A

Contractor:
LANDMARK
Landmark Structures I, LP
1665 Harmon Road Fort Worth, Texas, 76177
Tel: (817) 439-8888 Fax: (817) 439-9001

Design:	Dwn:	Job Number:
JEG	OT	1190
Chk:	Alloc:	Dwg. Number:
DK		402 - A
Issued Date:	Scale:	
06 / 07	N.T.S.	

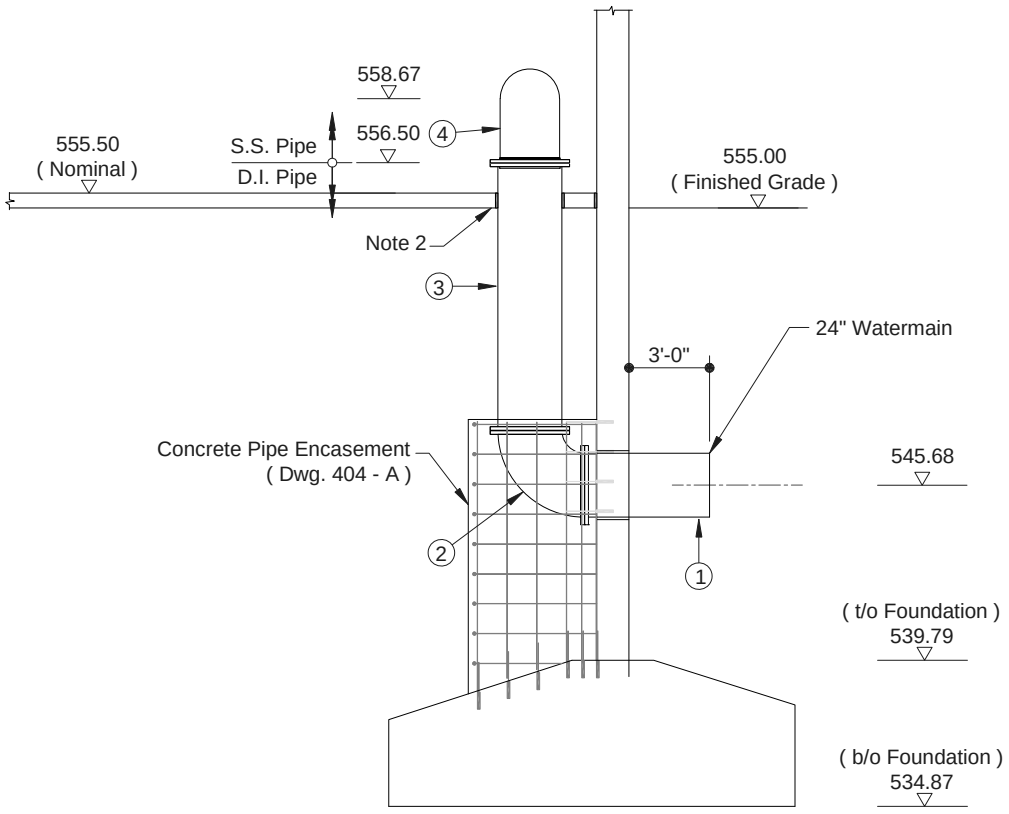

Section B - B

NOTES:

1. See Contract Drawings for additional details and site requirements.
2. 1/2" expansion joint cap strip with self leveling sealant.

Drawing References:

404 - A - Concrete Supports & Encasement Plan
410 - Piping / Mechanical Equipment - Legend

Project:
CITY OF ROCKWALL, TEXAS
2.0 MG ELEVATED WATER STORAGE TANK

No.:	Date:	By:	Revision:

MECHANICAL LAYOUT
SECTION B - B

Contractor:
LANDMARK
Landmark Structures I, LP
1665 Harmon Road Fort Worth, Texas, 76177
Tel: (817) 439-8888 Fax: (817) 439-9001

Design:	Dwn:	Job Number:
JEG	OT	1190
Chk: DK	Alloc:	Dwg. Number: 402 - B
Issued Date: 06 / 07	Scale: N.T.S.	

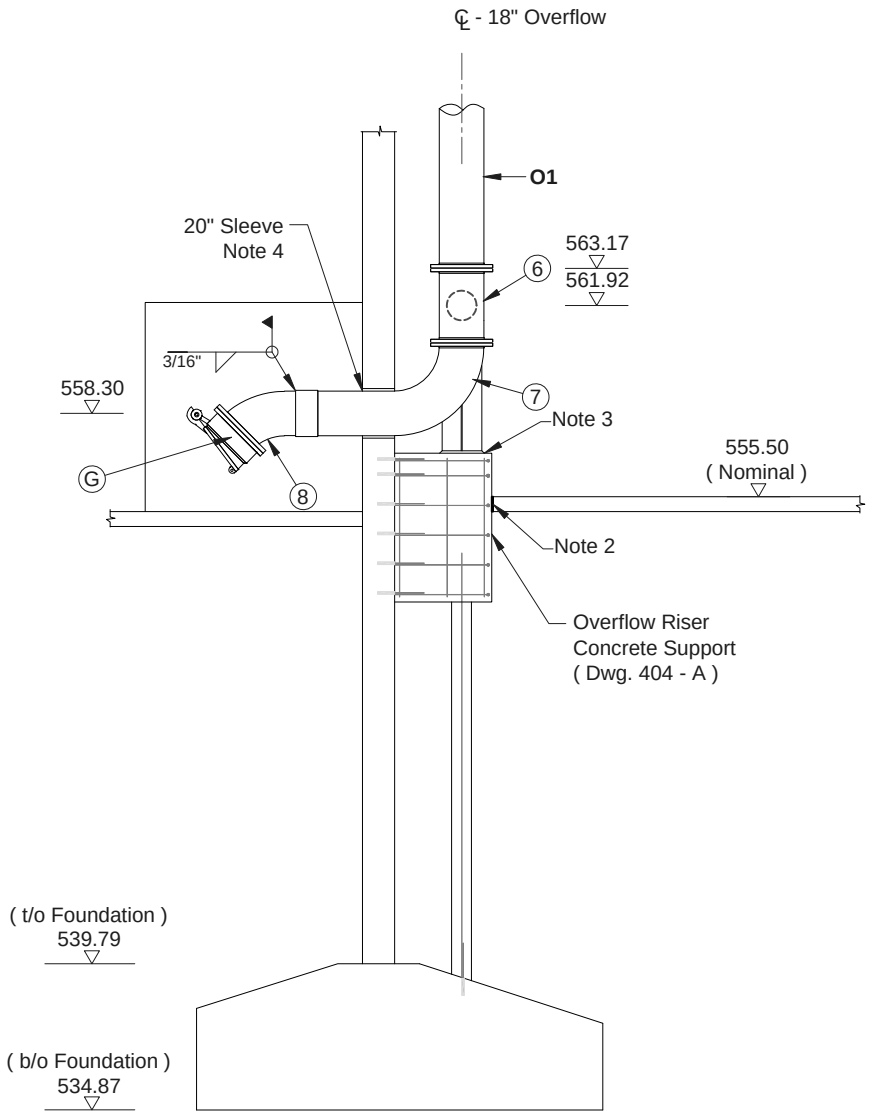

Section C - C

NOTES:

1. See Contract Drawings for additional details and site requirements.
2. 1/2" expansion joint cap strip with self leveling sealant.
3. Support base plate with 1" nonshrink grout. Install 4 pc's 3/4" expansion anchors.
4. Grout void after pipe instalation.

Drawing References:

404 - A - Concrete Supports & Encasement - Plan
406 - A1 - Overflow Riser - Elevation
410 - Piping / Mechanical Equipment - Legend

Project:
CITY OF ROCKWALL, TEXAS
2.0 MG ELEVATED WATER STORAGE TANK

No.:	Date:	By:	Revision:

MECHANICAL LAYOUT
SECTION C - C

Contractor:
LANDMARK
Landmark Structures I, LP
1665 Harmon Road Fort Worth, Texas, 76177
Tel: (817) 439-8888 Fax: (817) 439-9001

Design:	Dwn:	Job Number:
JEG	OT	1190
Chk:	Alloc:	Dwg. Number:
DK		402 - C
Issued Date:	Scale:	
06 / 07	N.T.S.	

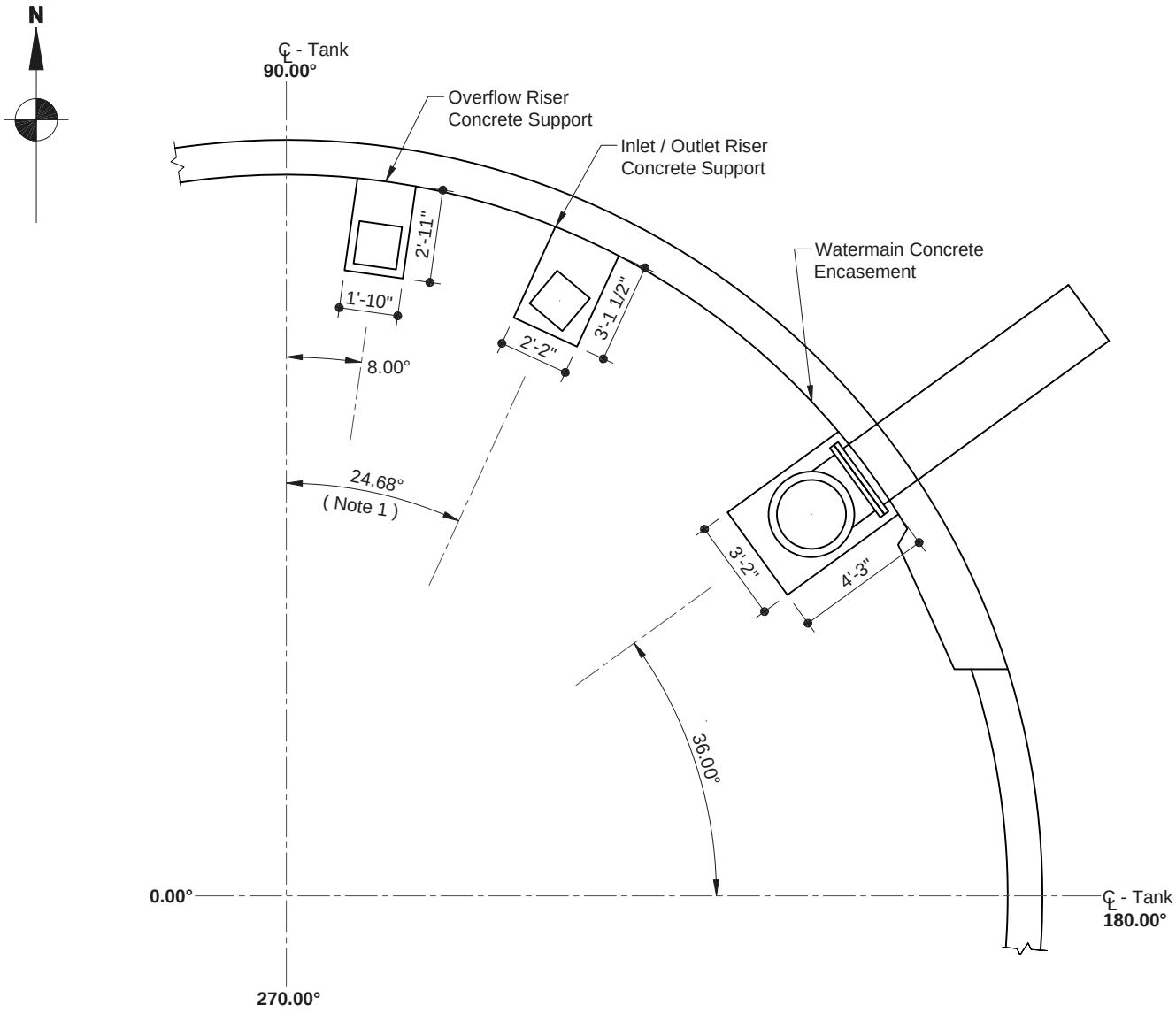

NOTES:

1. Angle to concrete support is different than angle to riser pipe due to base elbow configuration.

Drawing References:

404 - B - Concrete Supports & Encasement - Details

Project:
CITY OF ROCKWALL, TEXAS
2.0 MG ELEVATED WATER STORAGE TANK

No.	Date:	By:	Revision:

CONCRETE SUPPORTS & ENCASEMENT PLAN

Contractor:
LANDMARK
Landmark Structures I, LP
1665 Harmon Road Fort Worth, Texas, 76177
Tel: (817) 439-8888 Fax: (817) 439-9001

Design:	Dwn:	Job Number:
JEG	DK	1190
Chk: JEG	Alloc:	Dwg. Number: 404 - A
Issued Date: 06 / 07	Scale: N.T.S.	

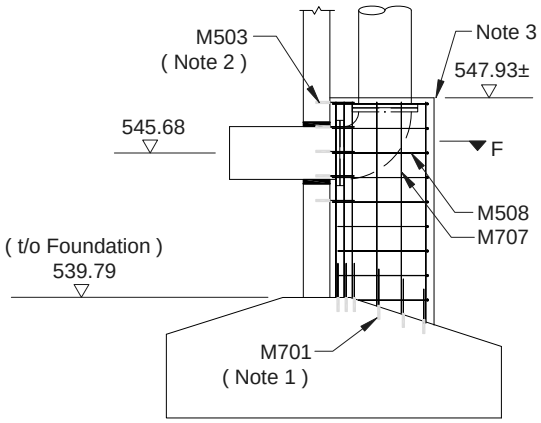

Watermain Concrete Encasement

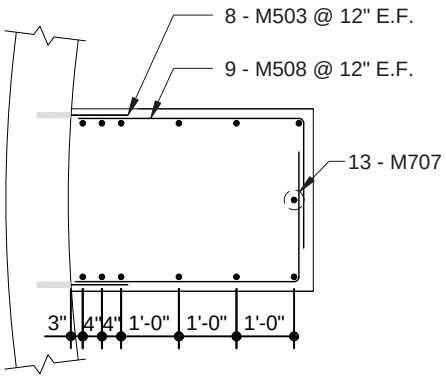

Section 'F'

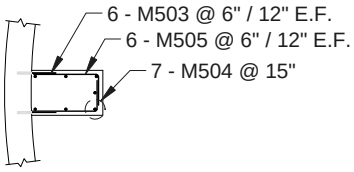

Section 'D'

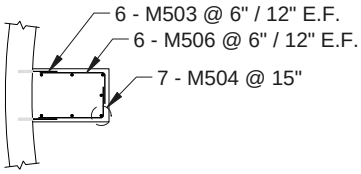

Section 'E'

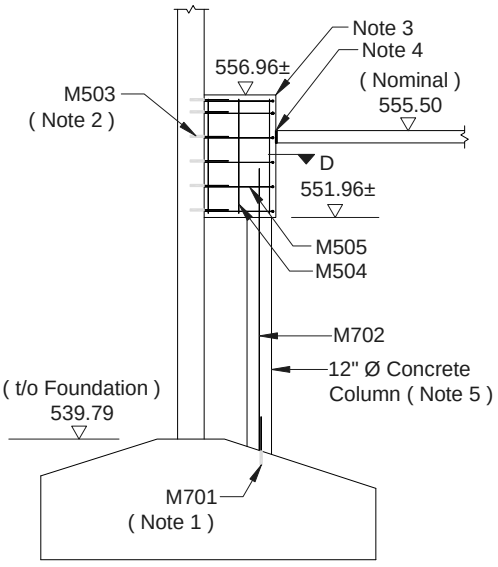

Overflow Riser Concrete Support

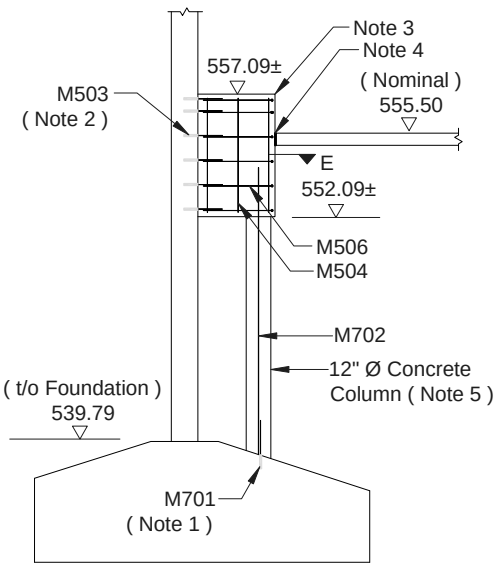

Inlet / Outlet Riser Concrete Support

NOTES:

1. Epoxy M701 anchors w/ W.R. Meadows Rezi Weld or equal. Embed rebar minimum 11" into foundation
2. Epoxy M503 anchors w/ W.R. Meadows Rezi Weld or equal. Embed rebar minimum 8" into pedestal wall.
3. Provide 3/4" chamfer on all edges of concrete support.
4. 1/2" isolation joint cap with self leveling sealant.
5. Form with Sonotube. Locate at centerline of riser pipe.

Project:

CITY OF ROCKWALL, TEXAS

2.0 MG ELEVATED WATER STORAGE TANK

No.:	Date:	By:	Revision:

CONCRETE SUPPORTS & ENCASEMENT DETAILS

Contractor:

LANDMARK

Landmark Structures I, LP
1665 Harmon Road Fort Worth, Texas, 76177
Tel: (817) 439-8888 Fax: (817) 439-9001

Design:	Dwn:	Job Number:
JEG	DK	1190
Chk:	Alloc:	Dwg. Number:
JEG		404 - B
Issued Date:	Scale:	
06 / 07	N.T.S.	

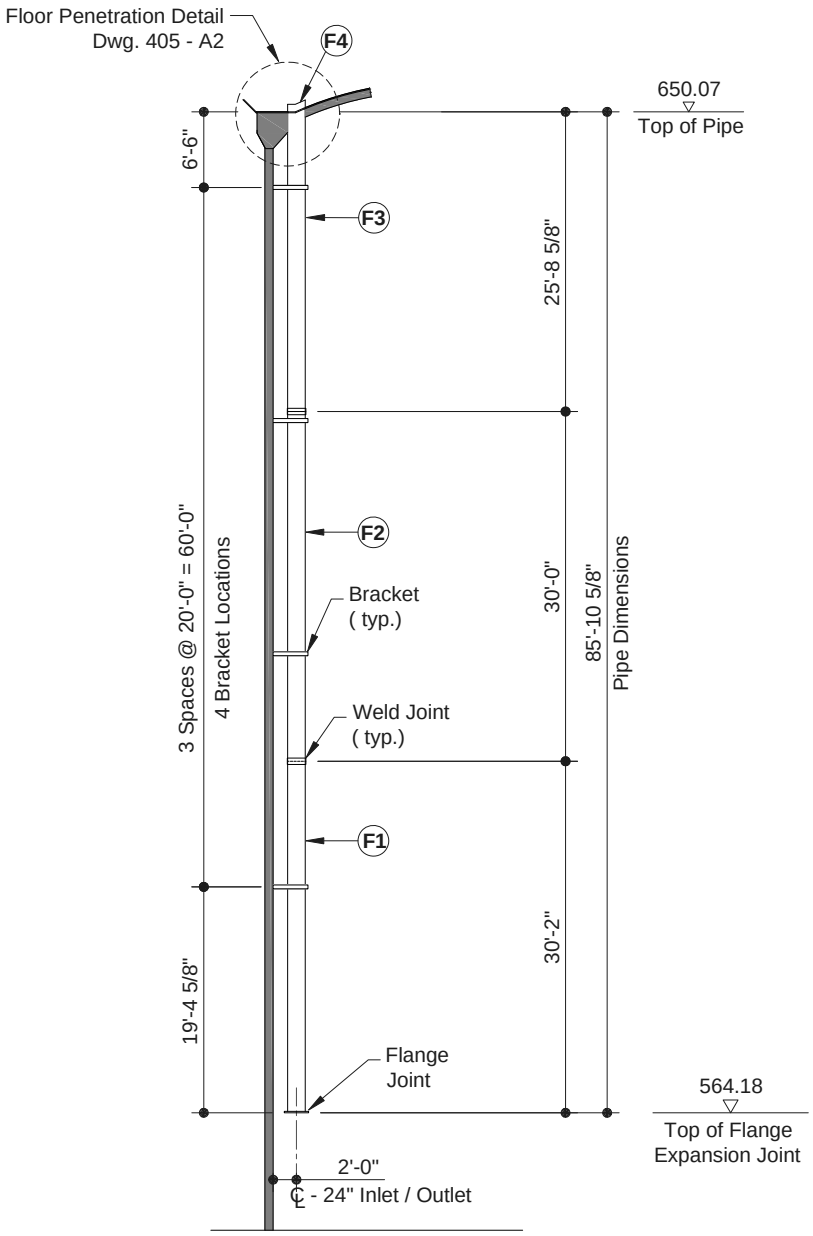

NOTES:

Drawing References:

S6 - Dome Floor Slab - Plan
405 - A2 - Inlet/Outlet Riser / Floor Penetration Details
409 - A - Riser Pipe - Bracket Details
410 - Piping / Mechanical Equipment - Legend

Project:
CITY OF ROCKWALL, TEXAS
2.0 MG ELEVATED WATER STORAGE TANK

No.:	Date:	By:	Revision:

INLET / OUTLET RISER ELEVATION

Contractor:
LANDMARK
Landmark Structures I, LP
1665 Harmon Road Fort Worth, Texas, 76177
Tel: (817) 439-8888 Fax: (817) 439-9001

Design:	Dwn:	Job Number:
JEG	VJ	1190
Chk:	Alloc:	Dwg. Number:
DK		405 - A1
Issued Date:	Scale:	
06 / 07	N.T.S.	

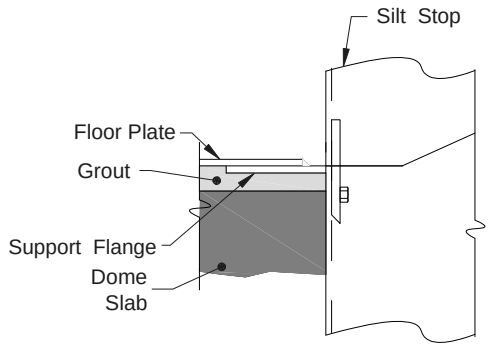

Detail A

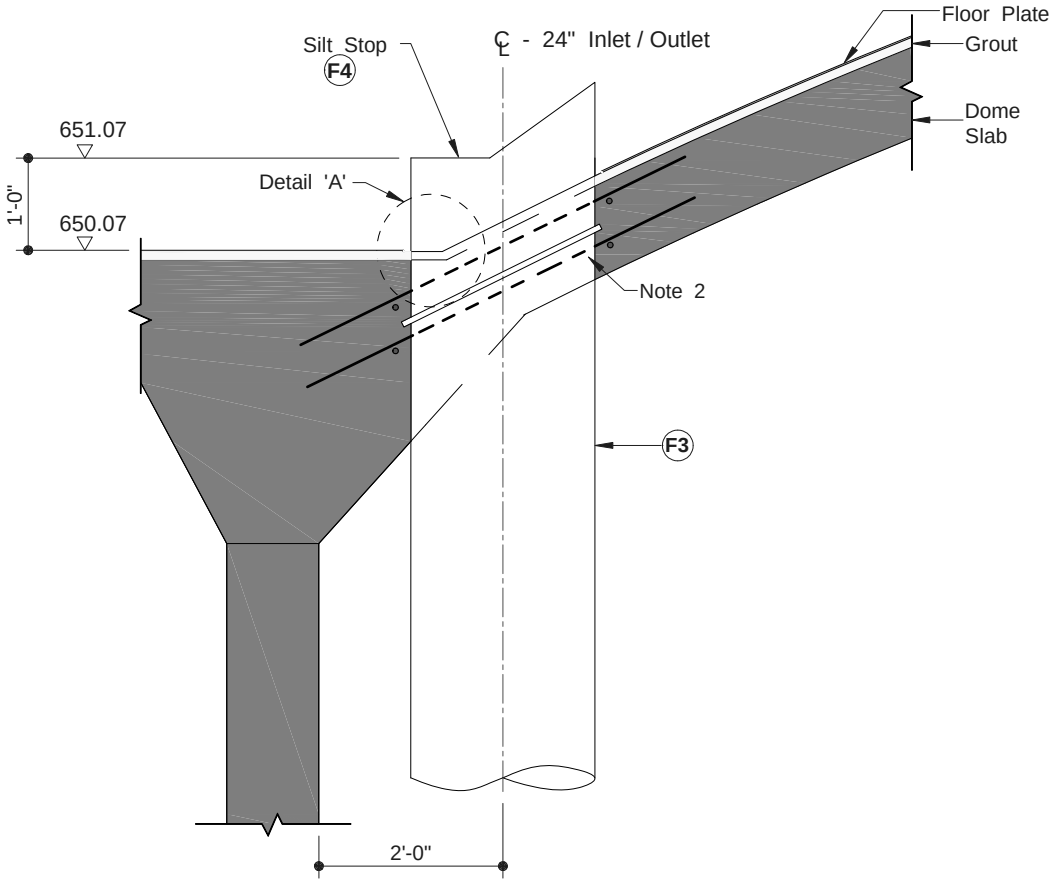

Riser Pipe Upper End Detail

NOTES :

1. Cast Mk. F3 in ring beam / dome slab. Install silt stop after painting.
2. Provide additional 8 pc's of #6 rebar x 72" lg. around penetration.

Drawing References

410 - Piping / Mechanical Equipment - Legend

Project: **CITY OF ROCKWALL, TEXAS** — **2.0 MG ELEVATED WATER STORAGE TANK**				
	No.:	Date:	By:	Revision:
				INLET / OUTLET RISER FLOOR PENETRATION DETAILS
Contractor: LANDMARK — **Landmark Structures I, LP** 1665 Harmon Road Fort Worth, Texas, 76177 Tel: (817) 439-8888 Fax: (817) 439-9001	Design: **JEG**	Dwn: **VJ**	Job Number: **1190**	
	Chk: **DK**	Alloc:	Dwg. Number: **405 - A2**	
	Issued Date: **06 / 07**	Scale: **N.T.S.**		

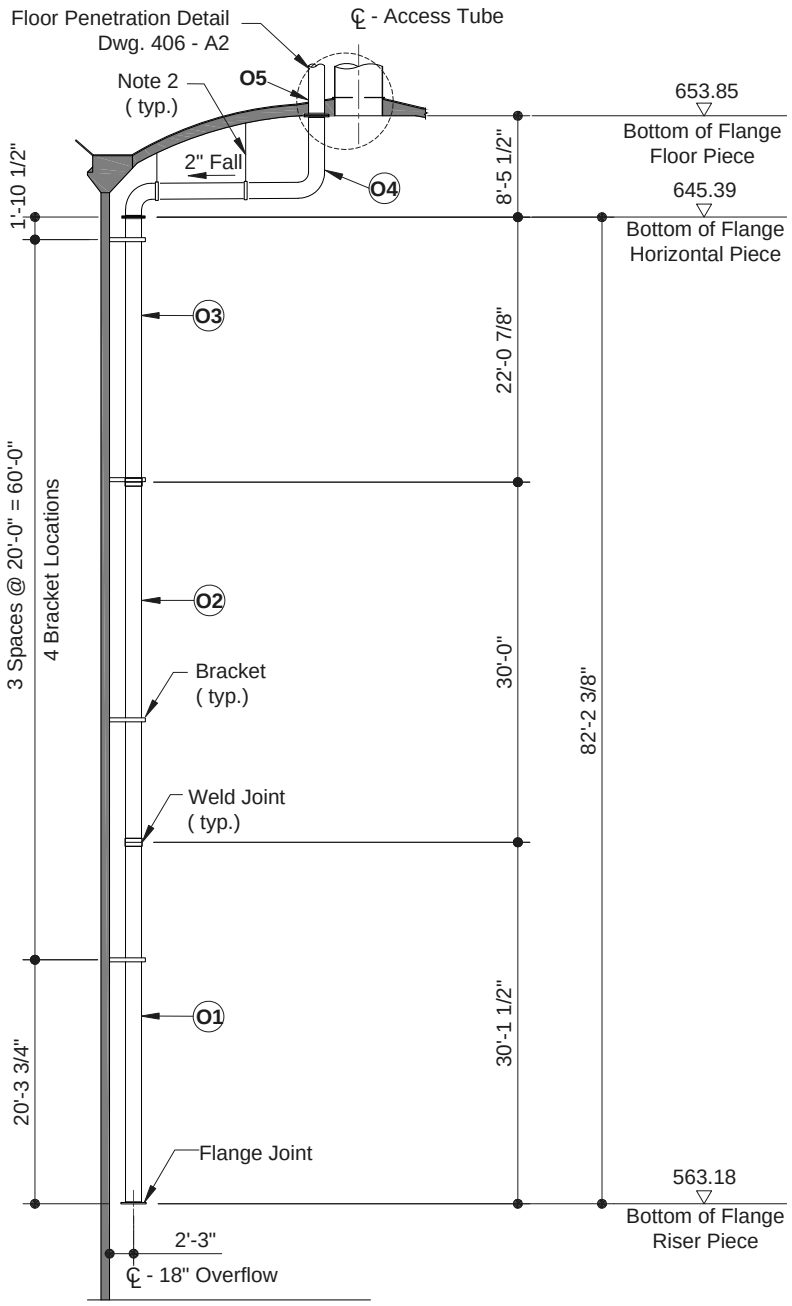

NOTES:

1. Provide 2" fall across horizontal run for draining.
2. Provide 2 pcs. Grinnell galvanized clevis hanger with 3/4" threaded rod. See Dwg. S6 for insert location and details .

Drawing References:

S6 - Dome Floor Slab - Plan
406 - A2 - Overflow Riser / Access Tube - Floor Penetration
409 - Riser Pipe - Bracket Details
410 - Piping / Mechanical Equipment - Legend

Project:
CITY OF ROCKWALL, TEXAS
2.0 MG ELEVATED WATER STORAGE TANK

No.	Date:	By:	Revision:

OVERFLOW RISER ELEVATION

Contractor:
LANDMARK
Landmark Structures I, LP
1665 Harmon Road Fort Worth, Texas, 76177
Tel: (817) 439-8888 Fax: (817) 439-9001

Design:	Dwn:	Job Number:
JEG	VP	1190
Chk:	Alloc:	Dwg. Number:
DK		406-A1
Issued Date:	Scale:	
06 / 07	N.T.S.	

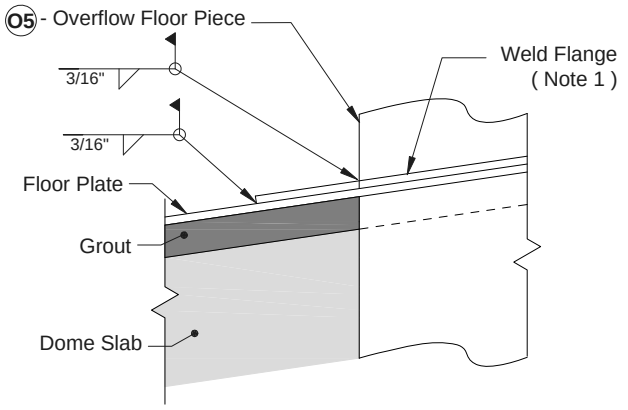

Detail 'A'

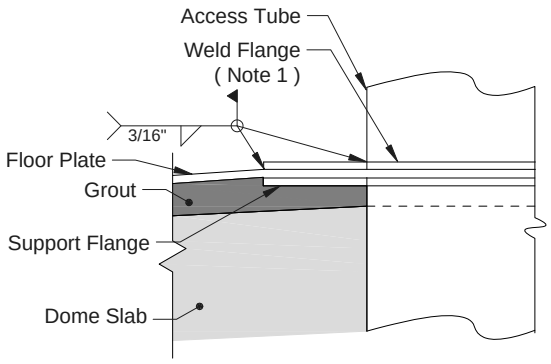

Detail 'B'

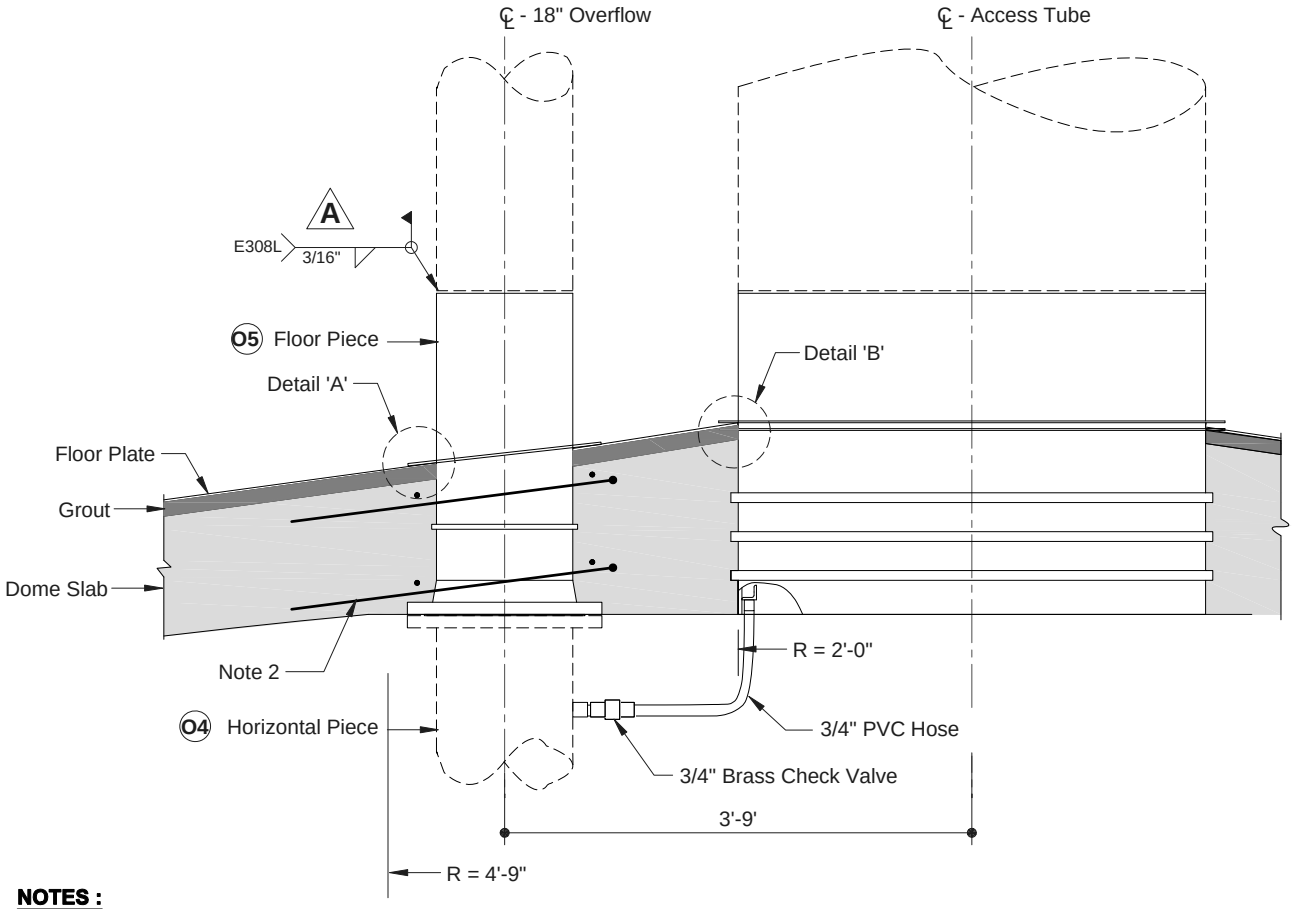

NOTES :

1. Weld flange shipped loose for field weld
2. See Dwg. S6 - A2 for reinforcement at dome penetration.

Drawing References

- S15 - Steel Tank - Access Tube / Top Platform
- 410 - Piping / Mechanical Equipment - Legend

Project:

CITY OF ROCKWALL, TEXAS

2.0 MG ELEVATED WATER STORAGE TANK

No.:	Date:	By:	Revision:
A	08/Nov/07	KKC	Change due to Overflow changing to S.S.

OVERFLOW RISER / ACCESS TUBE FLOOR PENETRATION

Contractor:

LANDMARK
Landmark Structures I, LP
1665 Harmon Road Fort Worth, Texas, 76177
Tel: (817) 439-8888 Fax: (817) 439-9001

Design:	Dwn:	Job Number:
JEG	VP	1190
Chk:	Alloc:	Dwg. Number:
DK		406 - A2
Issued Date:	Scale:	
06 / 07	N.T.S.	

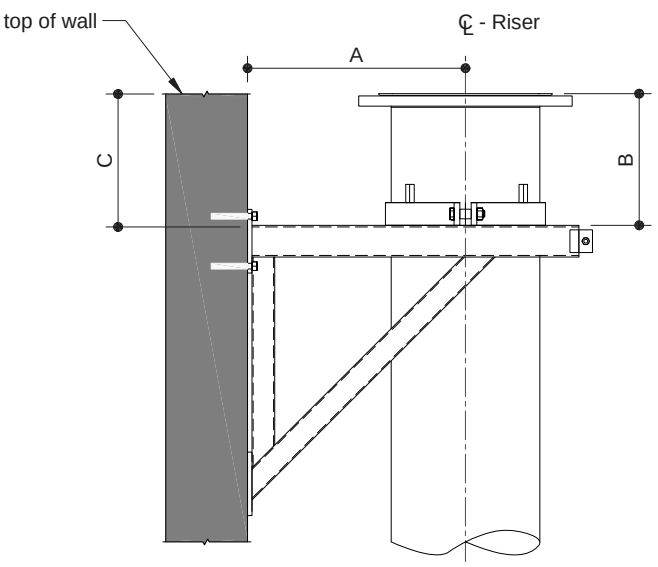

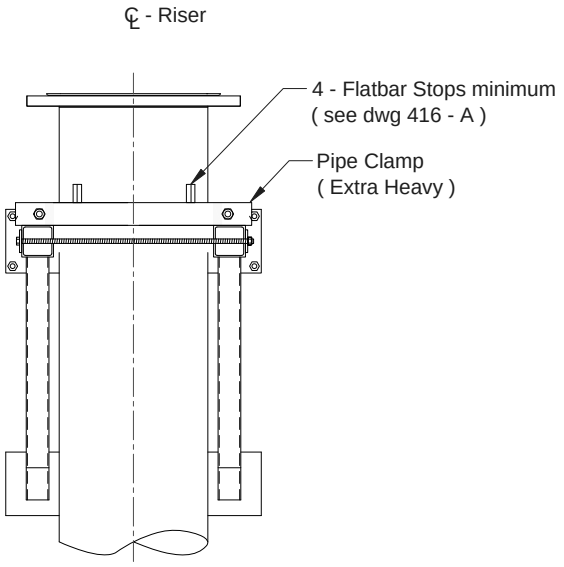

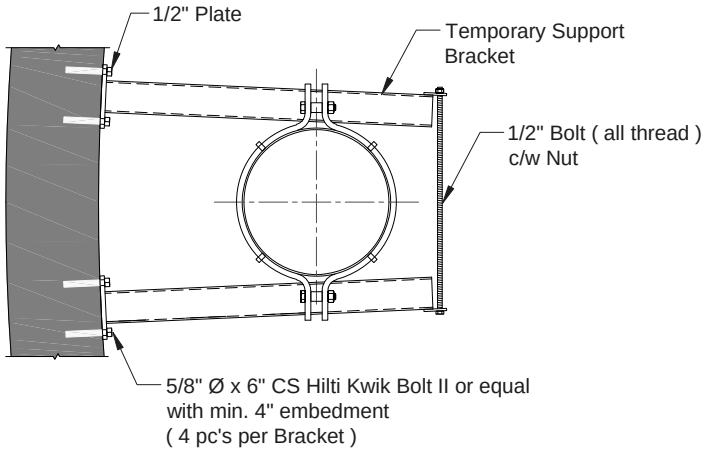

ANCHORAGE CAPACITY

CONCRETE STRENGTH	CAPACITY (2 BRACKETS)
1000 psi	6,500 lb
1500 psi	8,000 lb
2000 psi	9,000 lb
3000 psi	10,500 lb
4000 psi	11,500 lb

Riser	Pipe Diameter	Bracket Location	Flange Elevation	Dimension 'A'	Dimension 'B'	Dimension 'C'	Weight	Clamp Size
Overflow	18"	Top Bottom	645.38 565.18	2'-3" 2'-3"	1'-3" 1'-9"	2'- 9 1/8"	3220	3"

NOTES:

1. Bracket capacity - 6,000 lbs each / 12,000 lbs per pair if loaded between 20" and 32" from face of wall.
2. Overflow riser top detail shown.

Material Specification

Expansion Anchor: CS Hilti Kwik Bolt II or equal

Installation

For Overflow riser locate top brackets 2'-9 1/8" below top of concrete pedestal.
Follow anchor manufacturers instructions for installation.

Project:
CITY OF ROCKWALL, TEXAS
2.0 MG ELEVATED WATER STORAGE TANK

No.:	Date:	By:	Revision:

RISER PIPE STANDARD TEMPORARY SUPPORT BRACKET DETAIL

Contractor:
LANDMARK
Landmark Structures I, LP
1665 Harmon Road Fort Worth, Texas, 76177
Tel: (817) 439-8888 Fax: (817) 439-9001

Design:	Dwn:	Job Number:
JEG	VP	1190
Chk:	Alloc:	Dwg. Number:
DK		409 - D1
Issued Date:	Scale:	
06 / 07	N.T.S.	

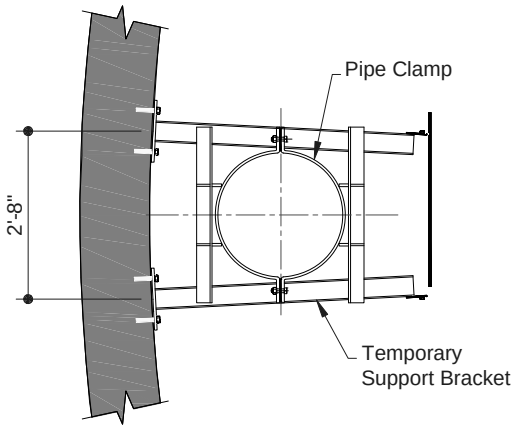

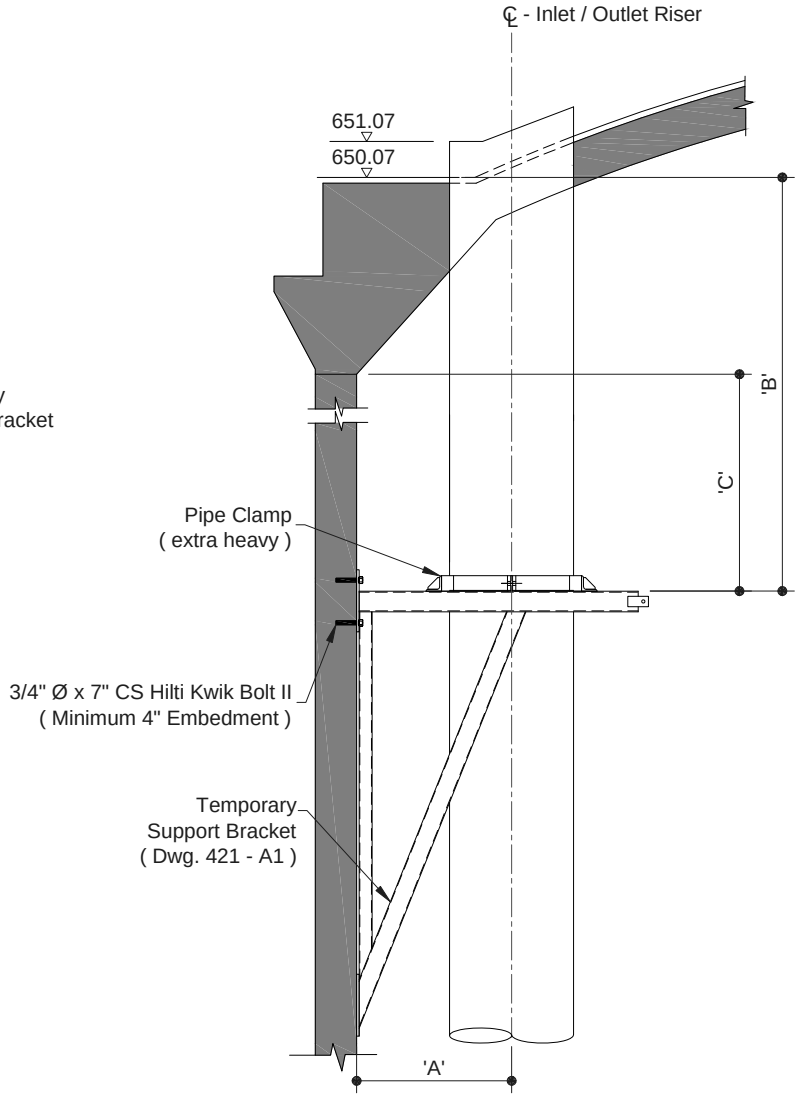

ANCHORAGE CAPACITY	
CONCRETE STRENGTH	CAPACITY (2 BRACKETS)
1000 psi	6,500 lb
1500 psi	8,000 lb
2000 psi	9,000 lb
3000 psi	10,500 lb
4000 psi	11,500 lb

Riser	Pipe Diameter	Bracket Location	Flange Elevation	Dimension 'A'	Dimension 'B'	Dimension 'C'	Weight	Clamp Size
Inlet / Outlet	24"	Top	650.07	2'-0"	4'- 2 1/8"	1'- 0"	4442	3"

NOTES:

1. Bracket capacity - 6,000 lbs each/12,000 lbs per pair if loaded between 20" and 32" from face of wall.
2. Inlet / Outlet riser(s) dimension 'B' measure to weld flange.

Material Specification

Expansion Anchor : CS Hilti Kwik Bolt II or equal

Installation

For Inlet / Outlet riser(s) locate top of brackets 1'-0" below top of concrete pedestal.
Follow anchor manufacturers instructions for installation.

Project:
CITY OF ROCKWALL, TEXAS
2.0 MG ELEVATED WATER STORAGE TANK

No.:	Date:	By:	Revision:

RISER PIPE EXTRA STANDARD TEMPORARY SUPPORT BRACKET DETAIL

Contractor:
LANDMARK
Landmark Structures I, LP
1665 Harmon Road Fort Worth, Texas, 76177
Tel: (817) 439-8888 Fax: (817) 439-9001

Design:	Dwn:	Job Number:
JEG	VP	1190
Chk:	Alloc:	Dwg. Number:
DK		409 - D2
Issued Date:	Scale:	
06 / 07	N.T.S.	

Mk.	Qty.	Size	Thickness	Joint	Description	Manufacturer	Reference
Mechanical @ Grade Slab							
1	1	24"	Class 53	Flg. / P.E.	D.I.P. x 5'-0"		
2	1	24"	Class 250	Flg. / Flg.	D.I. 90° S.R. Elbow		
3	1	24"	Class 53	Flg. / Flg.	D.I.P. x 8'-11 3/4"		
4	1	24"/12"	.250"/.180"	Flg. / Flg.	Type 304L S.S 90° Elbow / Pipe / Cut-in	Landmark	Dwg. 411 - A
5	1	24"/12"	.250"/.180"	Flg. / P.E.	Type 304L S.S Pipe / 90° Elbow	Landmark	Dwg. 411 - B
6	1	24"/12"	.250"/.180"	Flg. / Flg.	Type 304L S.S Pipe / Reducing Tee	Landmark	Dwg. 411 - C
7	1	18"	.188"	Flg. / Weld	Type 304L S.S Base Elbow/ Pipe	Landmark	Dwg. 411 - C
8	1	18"	.188"	Flg. / P.E.	Type 304L S.S 45° Elbow / Pipe	Landmark	Dwg. 411 - C
A	1	24"		Flg. / Flg.	Expansion Joint - Maxi 1015 (10" f/f)	Gen. Rubber	Dwg. 424
B	1	24"		Flg. / Flg.	Butterfly Valve MOV (8" f/f)		
C	1	24"		Flg.	Flange Adaptor (24" O.D. - S.S. 10s)	Smith Blair	Dwg. 425 - A
D	1	12"		Flg.	Flange Adaptor (12.75" O.D. - S.S. 10s)	Smith Blair	Dwg. 425 - A
E	1	12"		Flg. / Flg.	Gate Valve (14" f/f)		
F	1	12"		Flg. / Flg.	Gate Valve MOV (14" f/f)		
G	1	18"		Flg.	Flap Valve	Watermain	
H	3	3/4"		Thrd.	Brass Nipple / Brass Ball Valve / Brass Plug		

Project:
CITY OF ROCKWALL, TEXAS
2.0 MG ELEVATED WATER STORAGE TANK

No.:	Date:	By:	Revision:

PIPING / MECHANICAL EQUIPMENT LEGEND

Contractor:
LANDMARK
Landmark Structures I, LP
1665 Harmon Road Fort Worth, Texas, 76177
Tel: (817) 439-8888 Fax: (817) 439-9001

Design:	Dwn:	Job Number:
JEG	**VP**	**1190**
Chk: **DK**	Alloc:	Dwg. Number: **410 -A**
Issued Date: **06 / 07**	Scale: **N.T.S.**	

Mk.	Qty.	Size	Thickness	Joint	Description	Manufacturer	Reference
Inlet / Outlet Riser							
F1	1	24"	.188"	Flg. / Weld	Type 304L S.S Pipe x 30'-2"	Landmark	Dwg. 415 - A1
F2	1	24"	.188"	P.E. / Weld	Type 304L S.S Pipe x 30'-0"	Landmark	Dwg. 415 - A1
F3	1	24"	.188"	P.E. / Flg.	Type 304L S.S Pipe x 25'-8 5/8"	Landmark	Dwg. 415 - A1
F4	1	24"	.188"	P.E. / P.E.	Type 304L S.S Silt Stop x 1'-0"	Landmark	Dwg. 415 - B2
	4				Pipe Bracket Assembly	Landmark	Dwg. 420
Overflow Riser							
O1	1	18"	.188"	Flg. / Weld	Type 304L S.S Pipe x 30'-1 1/2"	Landmark	Dwg. 416 - A
O2	1	18"	.188"	P.E. / Weld	Type 304L S.S Pipe x 30'-0"	Landmark	Dwg. 416 - A
O3	1	18"	.188"	P.E. / Flg.	Type 304L S.S Pipe x 22'-0 3/4"	Landmark	Dwg. 416 - A
O4	1	18"	.188"	Flg. / Flg.	Type 304L S.S Pipe w/ 90° Elbows	Landmark	Dwg. 416 - B1
O5	1	18"	.375"	P.E. / Weld	C.S. Pipe x 2'-9"	Landmark	Dwg. 416 - C1
	4				Pipe Bracket Assembly	Landmark	Dwg. 420

Project:

CITY OF ROCKWALL, TEXAS

2.0 MG ELEVATED WATER STORAGE TANK

No.:	Date:	By:	Revision:

PIPING / MECHANICAL EQUIPMENT LEGEND

Contractor:

LANDMARK

Landmark Structures I, LP

1665 Harmon Road Fort Worth, Texas, 76177

Tel: (817) 439-8888 Fax: (817) 439-9001

Design:	Dwn:	Job Number:
JEG	**VP**	**1190**
Chk: **DK**	Alloc:	Dwg. Number: **410 -B**
Issued Date: **06 / 07**	Scale: **N.T.S.**	

Mk.	No.	Size	Joint	Description	Manufacturer	Reference
Fasteners / Gaskets / Insulation Kits						
	40	24"		2 - Bolt Sets - 1 1/4" x 4"		Expansion Joint
	100	24"		5 - Bolt Sets - 1 1/4" x 5 1/2"		
	80	18"		5 - Bolt Sets - 1 1/8" x 4 3/4"		
	48	12"		4 - Bolt Sets - 7/8" x 3 3/4"		
	5	24"		1 - Restraint Rod Set - 1 1/4" x 2'-0"		
	3	12"		1 - Restraint Rod Set - 7/8" x 1'-10"		
	3	24"		Full Face Red Rubber Gasket		
	5	18"		Full Face Red Rubber Gasket		
	4	12"		Full Face Red Rubber Gasket		
	2	24"		Neoprene Gasket		
	2	18"		Hangers	Grinnell	
				Note: All bolt Zinc Plated, Gr. 2 except noted		

Project:
CITY OF ROCKWALL, TEXAS
2.0 MG ELEVATED WATER STORAGE TANK

No.:	Date:	By:	Revision:

PIPING / MECHANICAL EQUIPMENT LEGEND

Contractor:
LANDMARK
Landmark Structures I, LP
1665 Harmon Road Fort Worth, Texas, 76177
Tel: (817) 439-8888 Fax: (817) 439-9001

Design:	Dwn:	Job Number:
JEG	VP	1190
Chk:	Alloc:	Dwg. Number:
DK		410 - C
Issued Date:	Scale:	
06 / 07	N.T.S.	

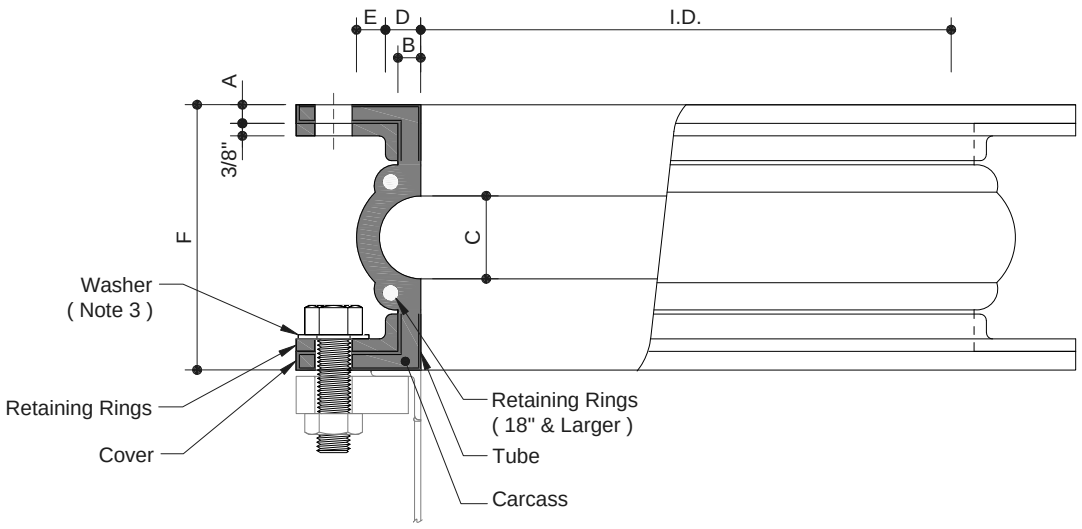

Qty	Joint Size (ID.)	Holes		Bolts			Geometric Data						Movement Data (Axial)			
		No.	Dia.	Dia.	DIP Length	S.S. Length	A	B	C	D	E	F	Com-pression	Force (lbs.)	Elon-gation	Force (lbs.)
	8	8	7/8"	3/4"	3"	3"	1/2"	9/16"	2"	1"	9/16"	6"	1 3/4"	1258	3/4"	699
	10	12	1"	7/8"	3 1/4"	3"	1/2"	9/16"	2"	1"	9/16"	8"	1 3/4"	1581	3/4"	884
	12	12	1"	7/8"	3 1/4"	3"	1/2"	5/8"	2"	1"	5/8"	8"	1 3/4"	1649	3/4"	935
	14	12	1 1/8"	1"	3 1/2"	3 1/4"	9/16"	11/16"	2 1/2"	1 1/4"	11/16"	8"	2"	2023	7/8"	1139
	16	16	1 1/8"	1"	3 1/2"	3 1/4"	9/16"	11/16"	2 1/2"	1 1/4"	11/16"	8"	2"	2159	7/8"	1224
	18	16	1 1/4"	1 1/8"	3 3/4"	3 1/2"	5/8"	3/4"	2 1/2"	1 1/4"	3/4"	8"	2"	2431	7/8"	1377
	20	20	1 1/4"	1 1/8"	3 3/4"	3 1/2"	5/8"	3/4"	2 1/2"	1 1/4"	3/4"	8"	2"	2703	7/8"	1530
1	24	20	1 3/8"	1 1/4"	4 1/4"	4"	3/4"	7/8"	3"	1 1/2"	7/8"	10"	2 1/4"	3638	1"	2108
	30	28	1 3/8"	1 1/4"	4 1/4"	4"	3/4"	3/4"	3"	1 1/2"	3/4"	10"	2 1/4"	4590	1"	2660
	36	32	1 5/8"	1 1/2"	4 1/4"	4"	3/4"	3/4"	3"	1 1/2"	3/4"	10"	2 1/4"	5610	1"	3250

NOTES:

1. Expansion Joint is General Rubber Corporation Style 1015 E. Test pressure 150 psi (min.).
2. Flange Drilling / OD is per ANSI B 16.1.
3. Provide washers under bolts at the retaining ring. Insert bolts from the expansion joint side.

Material Specification:

- Tube / Cover - Ethylene - Propylene Diene Monomer (EPDM).
- Carcass - Polyester with steel reinforcing rings
- Retaining Rings - ASTM A - 536 ductile iron - galvanized

Project:

CITY OF ROCKWALL, TEXAS

2.0 MG ELEVATED WATER STORAGE TANK

No.:	Date:	By:	Revision:

RISER PIPE EXPANSION JOINT

Contractor:

LANDMARK
Landmark Structures I, LP
1665 Harmon Road Fort Worth, Texas, 76177
Tel: (817) 439-8888 Fax: (817) 439-9001

Design:	Dwn:	Job Number:
JEG	VP	1190
Chk:	Alloc:	Dwg. Number:
DK		424
Issued Date:	Scale:	
06 / 07	N.T.S.	

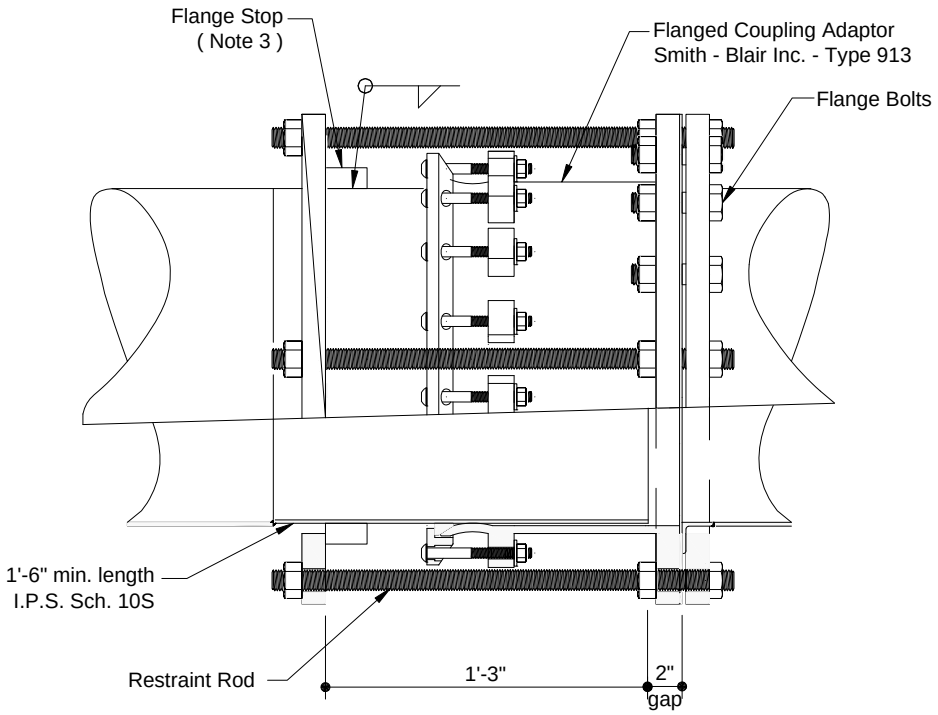

Pipe Size	Restraint Flange	Flange Stops		Total Bolts		Flange Bolts		Restraint Rod	
		No.	Height	No.	Diameter	No.	Length	No.	Length
4"	3/4"	3	1/2"	8	5/8"	6	2 1/2"	2	1'-9"
6"	3/4"	3	1/2"	8	3/4"	6	3"	2	1'-9"
8"	3/4"	3	1/2"	8	3/4"	6	3"	2	1'-9"
10"	1"	3	3/4"	12	7/8"	9	3 1/2"	3	1'-10"
12"	1"	3	1"	12	7/8"	9	3 1/2"	3	1'-10"
14"	1 1/8"	3	1 1/4"	12	1"	9	4 1/4"	3	1'-11"
16"	1 1/8"	4	1 1/4"	16	1"	12	4 1/4"	4	1'-11"
18"	1 1/4"	4	1 1/4"	16	1 1/8"	12	4 3/4"	4	2'-0"
20"	1 1/4"	5	1 1/4"	20	1 1/8"	15	4 3/4"	5	2'-0"
24"	1 3/8"	5	1 1/2"	20	1 1/4"	15	5"	5	2'-0"
30"	1 1/2"	7	1 3/4"	28	1 1/4"	21	5 1/2"	7	2'-1"

1. Restraint detail is limited to applications equivalent to 200 psi static pressure. Conditions that exceed this shall be checked for potential modification.
2. Locate flange stops and restraint rods equally spaced around pipe. For pipe 10" or larger place restraint directly over the flange stop.
3. Flange stops are 1/2" wide x 2" long x variable height (see table).

Material Specification:

- Bolts / Rods - ASTM A - 307 - plated
- Restraint Flange - ASTM A - 283 Grade D galvanized steel
- Flange Stops / Pipe - ASTM A - 240 Type 304L S.S.

Project:

CITY OF ROCKWALL, TEXAS

2.0 MG ELEVATED WATER STORAGE TANK

No.:	Date:	By:	Revision:

S.S. PIPE FABRICATION
RESTRAINED FLANGE ADAPTOR

Contractor:

LANDMARK
Landmark Structures I, LP
1665 Harmon Road Fort Worth, Texas, 76177
Tel: (817) 439-8888 Fax: (817) 439-9001

Design:	Dwn:	Job Number:
JEG	VP	1190
Chk:	Alloc:	Dwg. Number:
DK		425 - A
Issued Date:	Scale:	
06 / 07	N.T.S.	

VI. LIGHTNING PROTECTION

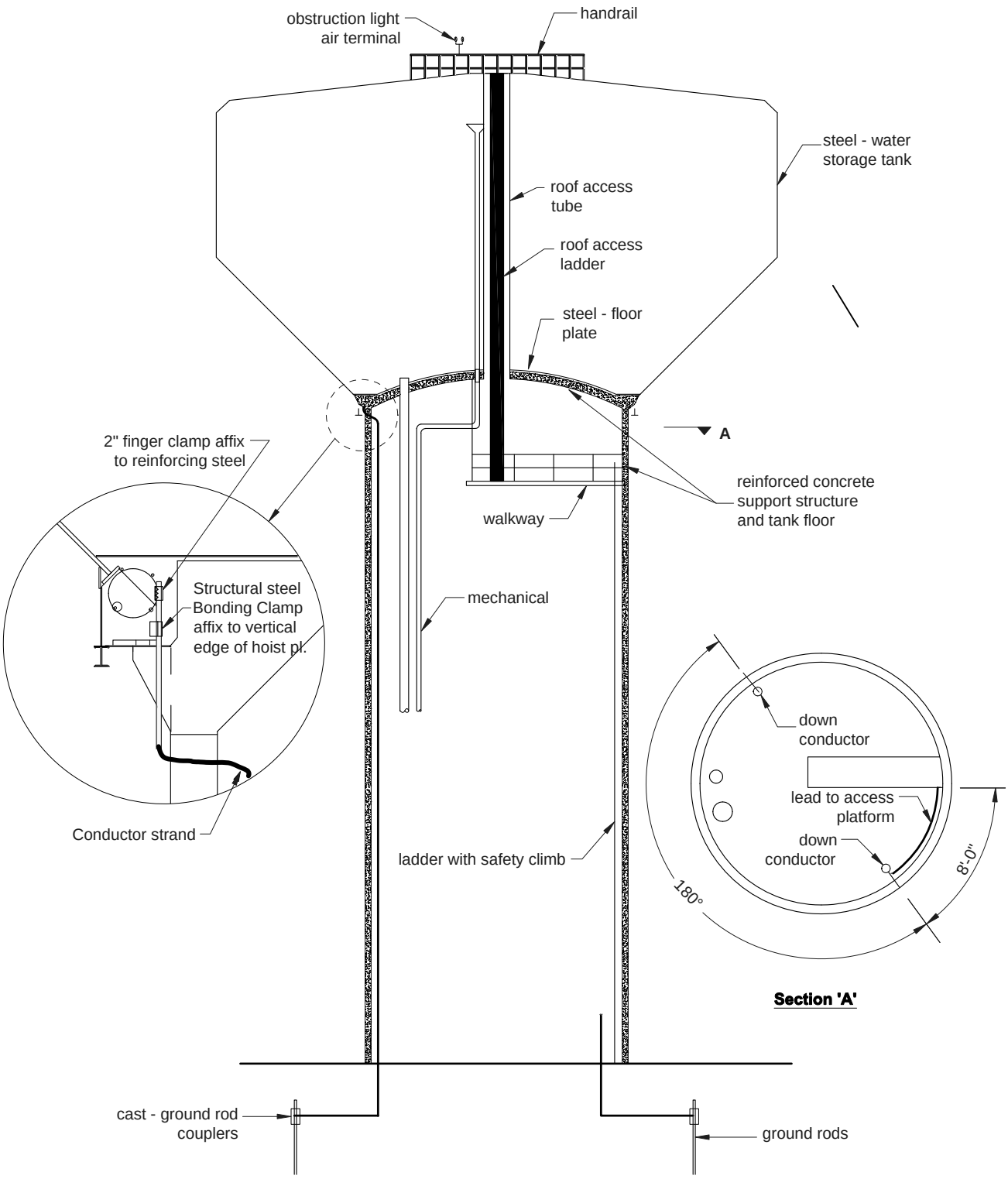

Project:

CITY OF ROCKWALL, TEXAS

2.0 MG ELEVATED WATER STORAGE TANK

No.:	Date:	By:	Revision:

LIGHTNING PROTECTION

Contractor:

LANDMARK

Landmark Structures I, LP

1665 Harmon Road Fort Worth, Texas, 76177

Tel: (817) 439-8888 Fax: (817) 439-9001

Design:	Dwn:	Job Number:
JEG	VP	1190
Chk:	Alloc:	Dwg. Number:
DK		803 - A1
Issued Date:	Scale:	
06 / 07	N.T.S.	

LIGHTNING PROTECTION

ELEVATED WATER STORAGE TANKS

The lightning protection system for the structure consists of two copper down conductors, fastened to the interior of the pedestal 180 degrees apart. At the top of the pedestal, the conductors are extended through the wall and fastened to the thrust ring. At the bottom of the pedestal the conductors are extended through the wall below grade and fastened to buried ground rods.

- Lighting protection for the obstruction light consist of an air terminal down conductor and bond plate fastened to the tank roof plate.
- Air terminals consist of 1/2" dia. solid copper point.
- Down conductors consist of not less than 28 wires of soft drawn copper (not less than 14 ga.) and not less than 4 ounces per foot.
- Down conductors are fastened to the pedestal with strap fasteners of at least 20 ga. copper minimum 1/2" in width at a minimum of 3 ft. centers between straps.
- Down conductors are anchored 6" both sides of any change in direction.
- Down conductors are placed no closer than 6 ft. from any metal object in the pedestal.
- Down conductors are installed a minimum of 8 ft. from the edge of the access platform.
- A y - connection to the down conductor is installed at the bottom elevation of the upper access platform and a lead is run to the access platform fastened with a cast bonding copper plate.
- At the top the down conductor is fastened to the ring beam and to the ring beam reinforcing. (See detail Dwg. 803 - A)
- Ground rods are copper clad, 5/8" in dia. and 8 ft. long.
- The connection of the down conductor to the ground rod is made with cast ground rod couplers at least 12" below grade.
- If it is impossible to drive the ground rods because of rock, auxiliary grounding may be used.
- Auxiliary grounding consists of a trench of at least 2 ft. in depth and 12 ft. in length. The down conductor is laid in the trench and backfilled.
- A ductile iron watermain may also be used as auxiliary grounding in addition to ground rods.

Project:
CITY OF ROCKWALL, TEXAS
2.0 MG ELEVATED WATER STORAGE TANK

No.:	Date:	By:	Revision:

LIGHTNING PROTECTION INSTALLATION INSTRUCTION (U.S.A)

Contractor:
LANDMARK
Landmark Structures I, LP
1665 Harmon Road Fort Worth, Texas, 76177
Tel: (817) 439-8888 Fax: (817) 439-9001

Design:	Dwn:	Job Number:
JEG	VP	1190
Chk: DK	Alloc:	Dwg. Number: 803 - C
Issued Date: 06 / 07	Scale: N.T.S.	

COUNTRY LANE 2.0 MG
ELEVATED STORAGE TANK

CITY OF ROCKWALL, TEXAS

SPECIFICATION SECTION: TS3

OPERATIONS & MAINTENANCE MANUAL

ELEVATED TANK COATINGS

TABLE OF CONTENTS:

1. **TANK COATING SYSTEM AND SCHEDULE**
2. **DATA SHEETS**
3. **TANK LOGO**

SUPPLIER / SUBCONTRACTOR

SEASON BLAST AND PAINT
CONTACT: JOHN PAGE
4230 SWONGER ROAD NORTHWEST
DOVER, OHIO 44622
(330) 340-8508

GENERAL CONTRACTOR

LANDMARK STRUCTURES I, LP
1665 HARMON ROAD
FORT WORTH, TEXAS 76177
(817) 439-8888

TANK COATING SYSTEM AND SCHEDULE

COUNTRY LANE 2.0 MG ELEVATED STORAGE TANK
FOR 700 SERVICE AREA
CITY OF ROCKWALL, TEXAS

SPEC SECTION: TS3

TANK COATING SYSTEM AND SCHEDULE

Interior (Wet and Dry Locations)		
Shop Clean	SSPC SP-10 (Near White Metal Blast)	
Shop Prime	Zinc Clad PCP Ultra	0.6 – 1.0 mils
Field Clean	Spot SP-10 with Sweep Blast	
Field Prime	Macropoxy 646 PW	5.0 – 7.0 mils
Field Finish	Macropoxy 646 PW	5.0 – 7.0 mils
	Minimum System DFT	10.0 mils

Exterior		
Shop Clean	SSPC SP-10 (Near White Metal Blast)	
Shop Prime	Zinc Clad PCP Ultra	0.6 – 1.0 mils
Field Clean	Spot SP-6 with Sweep Blast	
Field Prime	Corothane I Galvapac	2.5 – 4.0 mils
Field Intermediate	Macropoxy 646 PW	4.0 – 6.0 mils
Field Finish	FluoroKem – Ariel White – AA05	2.0 – 4.0 mils
	Minimum System DFT	8.5 mils

	Logo	
Field Finish	FluoroKem – Blue Summit – PL11	2.0 – 4.0 mils
Field Finish	FluoroKem – Emerald – AV22	2.0 – 4.0 mils

* No averaging of paint thicknesses

DATA SHEETS

Industrial & Marine Coatings

Certified to NSF/ANSI 61

5.11 COROTHANE® I GALVAPAC TWO PACK ZINC PRIMER

PART A B65G10 BINDER
PART F B69D210 ZINC DUST

PRODUCT INFORMATION

Revised 6/05

PRODUCT DESCRIPTION

COROTHANE I GALVAPAC TWO PACK ZINC PRIMER is a two component, VOC compliant, moisture curing urethane zinc-rich primer that contains micaceous iron oxide, designed for low temperature application to blast cleaned or power tool cleaned steel surfaces.

- Low temperature application - down to 20°F
- NSF approved to Standard 61 for potable water
- Easy to apply and recoat
- Usable for immersion service with recommended topcoated
- Resistant to mudcracking
- Abrasion and chemical resistant
- Meets Class B requirements for Slip Coefficient and Creep Resistance, .54
- Conforms to AWWA D102-03 Inside Coating System #5 (ICS-5)

RECOMMENDED USES

- **Immersion Service - potable water**: Meets NSF Standard 61 for use in potable water storage and Federal EPA requirements for composition of coatings used in potable water.
  - 250,000 gallon untopcoated
  - 20,000 gallon minimum topcoated
- On steel where resistance to rust or corrosion undercutting is required
- As a primer in a urethane coating system for bridges, tanks, chemical, and marine structures
- Ideal for priming water assisted abrasive blasted surfaces where flash rusting or blooming limits the use of conventional zinc rich coatings
- As a spot primer on hand and power tool cleaned surfaces for lead overcoating systems
- Acceptable for use with cathodic protection with select topcoats

PRODUCT CHARACTERISTICS

Finish: Flat

Color: Gray

Volume Solids: 67% ± 2%, mixed

Weight Solids: 91.7% ± 2%

VOC (calculated): <340 g/L; 2.8 lb/gal, mixed

Mix Ratio: 2 components; premeasured 2.75 gallon mix

Zinc Content in Dry Film: 83% ±2% by weight

Recommended Spreading Rate per coat:

Wet mils:	4.5 - 6.8
Dry mils:	3.0 - 4.0
Coverage:	268 - 358 sq ft/gal approximate

Drying Schedule @ 5.0 mils wet @ 50% RH:

	@ 40°F	@ 77°F	@100°F
To touch:	45 minutes	20 minutes	10 minutes
To recoat (minimum), atmospheric service:	8 hours	4-6 hours	1 hour
To recoat (minimum), immersion service:	24 hours	12 hours	10 hours
To cure, atmospheric service:	5 days	3 days	1 day
To cure, immersion service:	14 days	7 days	5 days

Drying time is temperature, humidity, and film thickness dependent.
For **Potable Water Service**, allow a minimum cure time of 7 days @ 77°F prior to placing in service. Sterilize and rinse per AWWA C652.

Shelf Life: Part A - 12 months, unopened
Part F - 24 months, unopened
Store indoors at 40°F to 100°F.

Flash Point: 94°F, PMCC

Reducer/Clean Up: Reducer #15, R7K15

PERFORMANCE CHARACTERISTICS

System Tested: (unless otherwise indicated)
Substrate: Steel
Surface Preparation: SSPC-SP5
1 ct. Corothane I GalvaPac Zinc Primer @ 3.5 mils dft
1 ct. Corothane I MIO-Aluminum @ 3.0 mils dft

Abrasion Resistance:
Method: ASTM D4060, CS17 wheel, 1000 cycles, 1 kg load
Result: 45 mg loss

Adhesion (Zinc Only):
Method: ASTM D4541
Result: 1943psi

Corrosion Weathering:
Method: ASTM D5894, 15 cycles, 5000 hours
Result: Rating 10 per ASTM D610 for Rusting (field)
Result: Rating 10 per ASTM D714 for Blistering

Direct Impact Resistance (Zinc Only):
Method: ASTM D2794
Result: 160 in. lb.

Dry Heat Resistance:
Method: ASTM D2485
Result: 300°F continuous, 350°F intermittent

Flexibility:
Method: ASTM D522, 180° bend, 1/4" mandrel
Result: Passes

Moisture Condensation Resistance (Zinc Only):
Method: ASTM D4585, 100°F, 4000 hours
Result: Rating 10 per ASTM D610 for Rusting
Result: Rating 10 per ASTM D714 for Blistering

Pencil Hardness:
Method: ASTM D3363
Result: 2H (zinc only)

Salt Fog Resistance (Zinc Only):
Method: ASTM B117, 5000 hours
Result: Rating 10 per ASTM D610 for Rusting
Result: Rating 10 per ASTM D714 for Blistering

Slip Coefficient (Zinc Only):
Method: AISC Specification for Structural Joints Using ASTM A325 or ASTM A490 Bolts
Result: Class B, .54

Wet Heat Resistance:
Method: Non-immersion
Result: 190°F

continued on back

Industrial & Marine Coatings

Certified to NSF/ANSI 61

5.11 COROTHANE® I GALVAPAC TWO PACK ZINC PRIMER

PART A B65G10 BINDER
PART F B69D210 ZINC DUST

PRODUCT INFORMATION

RECOMMENDED SYSTEMS

Immersion Service (Potable Water)
Steel:
1 ct. Corothane I GalvaPac Zinc Primer @ 3.0 - 4.0 mils dft
(250,000 gallon minimum tank size)

Steel, shop applied system(s):
1 ct. Corothane I GalvaPac Zinc Primer @ 3.0 - 4.0 mils dft
2 cts. Tank Clad HS @ 4.0 - 8.0 mils dft/ct*
(60,000 gallon minimum)
or Hi-Solids Catalyzed Epoxy @ 5.0 - 6.0 mils dft/ct
(20,000 gallon minimum tank size)

Other acceptable topcoats	Min. tank size
Dura-Plate 235 NSF	20,000 gallons
Macropoxy 646 NSF	20,000 gallons
Macropoxy 846 NSF	20,000 gallons

Immersion Service (Non-Potable Water)
Steel:
1 ct. Corothane I GalvaPac Zinc Primer @ 3.0 - 4.0 mils dft
2 cts. Corothane I Coal Tar @ 5.0 - 7.0 mils dft/ct

Atmospheric Service
Steel: Moderate Service
1 ct. Corothane I GalvaPac Zinc Primer @ 3.0 - 4.0 mils dft
1-2 cts. Corothane I Aliphatic Finish Coat @ 2.0 - 3.0 mils dft/ct
or Corothane I MIO-Aluminum @ 2.0 - 3.0 mils dft/ct
or Corothane I HS @ 2.0 - 3.0 mils dft/ct

Steel: Moderate Service, Rapid Return to Service
1 ct. Corothane I GalvaPac Zinc Primer @ 3.0 - 4.0 mils dft
1 ct. Fast Clad Urethane @ 6.0 - 9.0 mils dft

Previously Painted Steel:
(including red lead overcoatings)
Spot prime bare steel with 1 coat of Corothane I GalvaPac Zinc Primer
1 ct. Corothane I Mastic @ 2.5 - 3.5 mils dft
1 ct. Corothane I Aliphatic Finish Coat @ 2.0 - 3.0 mils dft

*System acceptable for use with cathodic protection

The systems listed above are representative of the product's use. Other systems may be appropriate.

SURFACE PREPARATION

Surface must be clean, dry, and in sound condition. Remove all oil, dust, grease, dirt, loose rust, and other foreign material to ensure adequate adhesion.

Refer to product Application Bulletin for detailed surface preparation information.

Minimum recommended surface preparation:
Iron & Steel
Atmospheric: SSPC-SP3, 2 mil profile preferred
Immersion, with recommended topcoat: SSPC-SP10, 2 mil profile
Spot Prime/Touch-Up: SSPC-SP3/NACE 2

TINTING

Do not tint.

APPLICATION CONDITIONS

Temperature:
air and surface: 20°F minimum, 120°F maximum
material: 45°F minimum

Do not apply over surface ice

Relative humidity: Can be applied at relative humidities up to 99%.

Refer to product Application Bulletin for detailed application information.

ORDERING INFORMATION

Packaging:
Part A: 1.73 gallons in a 3 gallon container
Part F: 60 lb zinc dust

Weight per gallon: 28.5 ± 0.2 lb

SAFETY PRECAUTIONS

Refer to the MSDS sheet before use.

Published technical data and instructions are subject to change without notice. Contact your Sherwin-Williams representative for additional technical data and instructions.

DISCLAIMER

The information and recommendations set forth in this Product Data Sheet are based upon tests conducted by or on behalf of The Sherwin-Williams Company. Such information and recommendations set forth herein are subject to change and pertain to the product offered at the time of publication. Consult your Sherwin-Williams representative to obtain the most recent Product Data Information and Application Bulletin.

WARRANTY

The Sherwin-Williams Company warrants our products to be free of manufacturing defects in accord with applicable Sherwin-Williams quality control procedures. Liability for products proven defective, if any, is limited to replacement of the defective product or the refund of the purchase price paid for the defective product as determined by Sherwin-Williams. NO OTHER WARRANTY OR GUARANTEE OF ANY KIND IS MADE BY SHERWIN-WILLIAMS, EXPRESSED OR IMPLIED, STATUTORY, BY OPERATION OF LAW OR OTHERWISE, INCLUDING MERCHANTABILITY AND FITNESS FOR A PARTICULAR PURPOSE.

Industrial & Marine Coatings

Certified to NSF/ANSI 61

5.11A
COROTHANE® I
GALVAPAC TWO PACK ZINC PRIMER

PART A	B65G10	BINDER
PART F	B69D210	ZINC DUST

APPLICATION BULLETIN

Revised 6/05

SURFACE PREPARATION

Surface must be clean, dry, and in sound condition. Remove all oil, dust, grease, dirt, loose rust, and other foreign material to ensure adequate adhesion.

Iron & Steel (immersion service)
Remove all oil and grease from surface by Solvent Cleaning per SSPC-SP1. Minimum surface preparation is Near White Metal Blast Cleaning per SSPC-SP10/NACE 2. Blast clean all surfaces using a sharp, angular abrasive for optimum surface profile (2 mils). Remove all weld spatter and round all sharp edges by grinding. Prime any bare steel the same day as it is cleaned or before flash rusting occurs.

Iron & Steel (atmospheric service)
Remove all oil and grease from surface by Solvent Cleaning per SSPC-SP1. Minimum surface preparation is Power Tool Cleaning per SSPC-SP3. For better performance, use Near White Metal Blast Cleaning per SSPC-SP10/NACE 2. Blast clean all surfaces using a sharp, angular abrasive for optimum surface profile (2 mils). Prime any bare steel the same day as it is cleaned or before flash rusting occurs.

Previously Painted Surfaces
If in sound condition, clean the surface of all foreign material. Smooth, hard, or glossy coatings and surfaces should be dulled by abrading the surface. Apply a test area, allowing paint to dry one week before testing adhesion. If adhesion is poor, or if this product attacks the previous finish, removal of the previous coating may be necessary. If paint is peeling or badly weathered, clean surface to sound substrate and treat as a new surface as above.

APPLICATION CONDITIONS

Temperature:	
air and surface:	20°F minimum, 120°F maximum
material:	45°F minimum
	Do not apply over surface ice
Relative humidity:	Can be applied at relative humidities up to 99%.

APPLICATION EQUIPMENT

The following is a guide. Changes in pressures and tip sizes may be needed for proper spray characteristics. Always purge spray equipment before use with listed reducer. Any reduction must be compliant with existing VOC regulations and compatible with the existing environmental and application conditions.

Reducer/Clean Up ..... Reducer #15, R7K15

Airless Spray

Pump	30:1
Pressure	1800-2000 psi
Hose	1/4" ID
Tip	.015" - .019"
Filter	60 mesh
Reduction	As needed up to 10% by volume

Conventional Spray

Unit	Graco	Binks
Gun	900	95
Fluid Nozzle	070	66/65
Air Nozzle	947	66PR
Atomization Pressure	60-70 psi	60-70 psi
Fluid Pressure	15-20 psi	15-20 psi
Reduction	As needed up to 10% by volume	

Brush

Brush	Natural bristle
Reduction	As needed up to 10% by volume

Roller

Cover	3/8" natural or synthetic with phenolic core
Reduction	As needed up to 10% by volume

If specific application equipment is not listed above, equivalent equipment may be substituted.

continued on back

Industrial & Marine Coatings

Certified to NSF/ANSI 61

5.11A
COROTHANE® I
GALVAPAC TWO PACK ZINC PRIMER

PART A	B65G10	BINDER
PART F	B69D210	ZINC DUST

APPLICATION BULLETIN

APPLICATION PROCEDURES

Surface preparation must be completed as indicated.

Corothane I - GalvaPac Zinc Primer comes in 2 premeasured containers which when mixed provides 2.75 gallons of read-to-apply material.

Mixing Instructions: Thoroughly agitate Binder Part A. Using continuous air driven agitation, slowly mix all 60 lbs. of Zinc Dust, B69D210, Part F into Binder Part A until mixture is completely uniform. After mixing, pour mixture through 30-60 mesh screen. Mixed material must be used within 8 hours. Do not mix previously mixed material with new.

If reducer solvent is used, add only after both components have been thoroughly mixed.

Apply paint at the recommended film thickness and spreading rate as indicated below:

Recommended Spreading Rate per coat:

Wet mils:	4.5 - 6.8
Dry mils:	3.0 - 4.0
Coverage:	268 - 358 sq ft/gal approximate

Drying Schedule @ 5.0 mils wet @ 50% RH:

	@ 40°F	@ 77°F	@100°F
To touch:	45 minutes	20 minutes	10 minutes
To recoat (minimum), atmospheric service:	8 hours	4-6 hours	1 hour
To recoat (minimum), immersion service:	24 hours	12 hours	10 hours
To cure, atmospheric service:	5 days	3 days	1 day
To cure, immersion service:	14 days	7 days	5 days

Drying time is temperature, humidity, and film thickness dependent.
For **Potable Water Service**, allow a minimum cure time of 7 days @ 77°F prior to placing in service. Sterilize and rinse per AWWA C652.

Application of coating above maximum or below minimum recommended spreading rate may adversely affect coating performance.

PERFORMANCE TIPS

Stripe coat all crevices, welds, and sharp angles to prevent early failure in these areas.

When using spray application, use a 50% overlap with each pass of the gun to avoid holidays, bare areas, and pinholes. If necessary, cross spray at a right angle.

Spreading rates are calculated on volume solids and do not include an application loss factor due to surface profile, roughness or porosity of the surface, skill and technique of the applicator, method of application, various surface irregularities, material lost during mixing, spillage, overthinning, climatic conditions, and excessive film build.

Excessive reduction of material can affect film build, appearance, and adhesion.

In order to avoid blockage of spray equipment, clean equipment before use or before periods of extended downtime with Reducer #15, R7K15.

Pour a small amount of Reducer #15, R7K15 over the top of the paint in the can to prevent skinning or gelling.

Place a temporary cover over the pail to keep excessive moisture, condensation, fog, or rain from contaminating the coating.

Do not use continuous agitation.

For **Potable Water Service**, allow a minimum cure time of 7 days @ 77°F prior to placing in service. Sterilize and rinse per AWWA C652-92.

It is recommended that partially used cans not be sealed/closed for use at a later date.

An intermediate coat is recommended to provide a uniform appearance of the topcoat.

Not for use with cathodic protection except as indicated under the recommended systems.

Corothane I KAAccelerator is acceptable for use. See data page 5.98 for details.

Refer to Product Information sheet for additional performance characteristics and properties.

CLEAN UP INSTRUCTIONS

Clean spills and spatters immediately with Reducer #15, R7K15. Clean tools immediately after use with Reducer #15, R7K15. Follow manufacturer's safety recommendations when using any solvent.

SAFETY PRECAUTIONS

Refer to the MSDS sheet before use.

Published technical data and instructions are subject to change without notice. Contact your Sherwin-Williams representative for additional technical data and instructions.

DISCLAIMER

The information and recommendations set forth in this Product Data Sheet are based upon tests conducted by or on behalf of The Sherwin-Williams Company. Such information and recommendations set forth herein are subject to change and pertain to the product offered at the time of publication. Consult your Sherwin-Williams representative to obtain the most recent Product Data Information and Application Bulletin.

WARRANTY

The Sherwin-Williams Company warrants our products to be free of manufacturing defects in accord with applicable Sherwin-Williams quality control procedures. Liability for products proven defective, if any, is limited to replacement of the defective product or the refund of the purchase price paid for the defective product as determined by Sherwin-Williams. NO OTHER WARRANTY OR GUARANTEE OF ANY KIND IS MADE BY SHERWIN-WILLIAMS, EXPRESSED OR IMPLIED, STATUTORY, BY OPERATION OF LAW OR OTHERWISE, INCLUDING MERCHANTABILITY AND FITNESS FOR A PARTICULAR PURPOSE.

Industrial & Marine Coatings

5.29

FLUOROKEM

FLUOROPOLYMER URETHANE

PART A B65-550 SERIES
PART B B65V550 HARDENER

PRODUCT INFORMATION

Revised 5/07

PRODUCT DESCRIPTION

FluoroKem - A premium, ultra-durable ambient cured fluoropolymer urethane finish. Provides unparalleled color and gloss performance, even in the most severe exposures.

- Superior color and gloss retention
- Fast Dry
- Graffiti resistant
- Chemical and abrasion resistant
- Airless, conventional spray, and brush and roll application
- Ambient temperature cure

RECOMMENDED USES

Interior or exterior exposure where extreme weather durability is required.

- Stadiums
- Sports Complexes
- Bridges
- Marine
- Municipal Building
- Fascias
- Water tanks
- Storage tank exteriors
- Museums
- Schools
- High visibility areas
- Meets AWWA D102 OCS No. 4

PRODUCT CHARACTERISTICS

Finish: High Gloss

Color: Wide range of colors available

Volume Solids: 48% +/-2%
(mixed, may vary by color)

Weight Solids: 66% +/-2%
(mixed, may vary by color)

VOC (EPA Method #24): <340 g/L; <2.8lb/gal, mixed

Mix Ratio: 4:1 by volume

Recommended Spreading Rate:

Wet mils:	4.0 – 6.0
Dry mils:	2.0 – 3.0
Coverage:	255 – 384 sq ft/gal approximate

Note: Brush or roll application may require multiple coats to achieve maximum film thickness and uniformity of appearance.

Drying Schedule @ 5.0 mils wet @ 50% RH:

	@50°F	@77°F	@120°F
To touch:	6 hrs	2 hrs	1 hr
To handle:	24 hrs	4 hrs	2 hrs
To Recoat:			
Minimum	24 hrs	4 hrs	2 hrs
Maximum	14 days	14 days	14 days

Maximum recoat time is 14 days. If maximum recoat time is exceeded, abrade surface before recoating.

Drying time is temperature, humidity, and film thickness dependent.

Pot Life: 5 hrs 3 hrs 1 hr

Sweat-in-Time: None required

Shelf Life: Part A: 36 months, unopened
Part B: 12 months, unopened
Unopened, stored indoors @ 40°F to 100 °F

Flash Point: 58°F, PMCC, mixed

Reducer: R7K111 (VOC exempt), as needed up to 5%

Clean-Up: R7K15

PERFORMANCE CHARACTERISTICS

System Tested (unless otherwise indicated)
Substrate: Steel
Surface Preparation: SSPC-SP10/NACE 2
Primer: Macropoxy 646 @ 6.0 mils dft
Finish: FluoroKem @ 2.5 mils dft

Adhesion:
Method: ASTM D4541
Result: 845 psi

Direct Impact Resistance:
Method: ASTM G14
Result: 120 in. Lbs.

Dry Heat Resistance:
Method: ASTM D2485
Result: 200 °F

Accelerated Weathering – QUV-A
Method: ASTM D4587, QUV-A 15,000 hours
Result: >80% gloss retention; <2 delta E Color Change

Flexibility: (topcoat only)
Method: ASTM D522, 180° bend, 1/8 in- mandrel
Result: Passes

Moisture Condensation Resistance:
Method: ASTM D4585, 100°F, 5000 hours
Results: No blisters, rust, no loss of adhesion or gloss

Pencil Hardness: (topcoat only)
Method: ASTM D3363
Result: F – H

Salt Fog Resistance:
Method: ASTM B117, 5000 hours
Result: Rating 10 per ASTM D714 for blistering
Rating 10 per ASTM D610 for rusting

Thermal Shock:
Method: 30 cycles (1 cycle = 4 hours fresh water immersion, 6 hours freezing, and 4 hours heating @ 120°F)
Result: No loss of adhesion, no cracking

continued on back

Industrial & Marine Coatings

5.29

FLUOROKEM

FLUOROPOLYMER URETHANE

PART A	B65-550	SERIES
PART B	B65V550	HARDENER

PRODUCT INFORMATION

RECOMMENDED SYSTEMS

Recommended Primers:

Steel:
1 ct. Duraplate 235 @ 4.0-8.0 mils or
1 ct. Macropoxy 646 @ 5.0-10.0 mils or
1 ct. Epoxy Mastic Aluminum @ 4.0-6.0 mils
1 -2 cts. FluoroKem @ 2.0 -3.0 mils dft/ct

Concrete/Masonry - smooth:
1 ct. Macropoxy 646 @ 5.0-10.0 mils
1- 2 coats FluoroKem at 2.0-3.0 mils dft/ct

Steel Tank Exteriors - AWWA D102 OCS No. 4
1 ct Corothane I- Galvapac @ 2.0 mils dft
1 ct Acrolon 218 HS @ 3.0 mils dft
1 ct FluoroKem @ 2.0 mils dft

SURFACE PREPARATION

Surface must be clean, dry, and in sound condition. Remove all oil, dust, grease, dirt, loose rust, and other foreign material to ensure adequate adhesion.

Refer to product Application Bulletin for detailed surface preparation information.

Minimum recommended surface preparation:

Iron & Steel:	SSPC-SP6/NACE 3
Concrete & Masonry:	SSPC-SP13/NACE 6 or ICRI 03732, CSP 1-3

Prime with recommended primers as needed.

TINTING

Do not tint.
Color: Wide range of colors available

APPLICATION CONDITIONS

Temperature:	40ºF minimum, 120ºF maximum (Air, surface, and material)
	At least 5 ºF above dew point
Relative humidity:	85% maximum

Refer to product Application Bulletin for detailed application information.

Packaging:
Part A: 1 gal and 5 gal containers
Part B: qt & 1 gal containers
Premeasured components.

Weight per gallon: 11.14 +/-0.2 lb
(mixed, may vary with color)

DISCLAIMER

The information and recommendations set forth in this Product Data Sheet are based upon tests conducted by or on behalf of The Sherwin-Williams Company. Such information and recommendations set forth herein are subject to change and pertain to the product offered at the time of publication. Consult your Sherwin-Williams representative to obtain the most recent Product Data Information and Application Bulletin.

WARRANTY

The Sherwin-Williams Company warrants our products to be free of manufacturing defects in accord with applicable Sherwin-Williams quality control procedures. Liability for products proven defective, if any, is limited to replacement of the defective product or the refund of the purchase price paid for the defective product as determined by Sherwin-Williams. NO OTHER WARRANTY OR GUARANTEE OF ANY KIND IS MADE BY SHERWIN-WILLIAMS, EXPRESSED OR IMPLIED, STATUTORY, BY OPERATION OF LAW OR OTHERWISE, INCLUDING MERCHANTABILITY AND FITNESS FOR A PARTICULAR PURPOSE.

Industrial & Marine Coatings

5.29A

FLUOROKEM

FLUOROPOLYMER URETHANE

PART A	B65-550	SERIES
PART B	B65V550	HARDENER

APPLICATION BULLETIN

Revised 5/07

SURFACE PREPARATION

Surface must be clean, dry, and in sound condition. Remove all oil, dust, grease, dirt, loose rust, and other foreign material to ensure adequate adhesion.

Iron & Steel
Remove all oil and grease from surface by Solvent Cleaning per SSPC-SP1. Minimum surface preparation is Commercial Blast Cleaning per SSPC-SP6/NACE 3. For better performance, use Near White Metal Blast Cleaning per SSPC-SP10/NACE 2. Blast clean all surfaces using a sharp, angular abrasive for optimum surface profile (1-2 mils). Prime any bare steel the same day as it is cleaned or before flash rusting occurs. Primer Required.

Poured Concrete
New
For surface preparation, refer to SSPC-SP13/NACE 6, or ICRI 03732, CSP 1-3. Surfaces must be clean, dry, sound and offer sufficient profile to achieve adequate adhesion. Minimum substrate cure is 28 days at 75°F. Remove all form release agents, curing compounds, salts, efflorescence, laitance, and other foreign matter by sandblasting, shotblasting, mechanical scarification, or suitable chemical means. Refer to ASTM D4260. Rinse thoroughly to achieve a final pH between 8.0 and 10.0. Allow to dry thoroughly prior to coating. Primer Required.

Old
Surface preparation is done in much the same manner as new concrete, however, if the concrete is contaminated with oils, grease, chemicals, etc., they must be removed by cleaning with a strong detergent. Refer to ASTM D4258. Form release agents, hardeners, etc. must be removed by sandblasting, shotblasting, mechanical scarification, or suitable chemical means. If surface deterioration presents an unacceptably rough surface, Kem Cati-Coat Epoxy HS Filler/Sealer is recommended to patch and resurface damaged concrete. Primer Required.
Fill all cracks, voids and bugholes with Steel Seam FT910

Always follow the standard methods listed below:
ASTM D4258 Standard Practice for Cleaning Concrete.
ASTM D4259 Standard Practice for Abrading Concrete.
ASTM D4260 Standard Practice for Etching Concrete.
ASTM F1869 Standard Test Method for Measuring Moisture Vapor Emission Rate of Concrete.
SSPC-SP 13/Nace 6 Surface Preparation of Concrete.
ICRI 03732 Concrete Surface Preparation

APPLICATION CONDITIONS

Temperature: 40°F minimum, 120°F maximum
(Air, surface and material)
At least 5°F above dew point

Relative humidity: 85% maximum

APPLICATION EQUIPMENT

The following is a guide. Changes in pressures and tip sizes may be needed for proper spray characteristics. Always purge spray equipment before use with listed reducer. Any reduction must be compatible with the existing environmental and application conditions.

Reducer: R7K111, as needed up to 5%
Clean Up: R7K15

Conventional Spray
Gun..... Model 95 Binks
Tip..... 67
Needle..... 667
Air Cap.....67PB
Atomization Pressure.....45 – 55 psi
Fluid Pressure.....15 - 20 psi

HVLP (Spray Pot)
Gun..... Graco Mach 1 SL
Tip..... 92
Needle.....ABSS
Air Cap..... 95 AP
Atomization Pressure..... 50 psi
Fluid Pressure..... .20 psi

Air Assisted Airless
Pump.....Graco 30:1 President
Gun.....Graco Air-Assisted Gun
Tip.....411
Atomization Pressure..... 30 psi
Fluid Pressure..... .60 psi

Airless Spray
Pressure.....1500 – 2200 psi
Hose..... ¼ in D
Tip..... .013 " - .015"
Filter..... 60 mesh

Brush
Brush..... Natural Bristle

Roller
Cover..... 3/8" woven with solvent resistant core

If specific application equipment is listed above, equivalent equipment may be used.

continued on back

Industrial & Marine Coatings

5.29A

FLUOROKEM

FLUOROPOLYMER URETHANE

PART A B65-550 SERIES
PART B B65V550 HARDENER

APPLICATION BULLETIN

APPLICATION PROCEDURES

Surface preparation must be completed as indicated.

Mix contents of each component thoroughly with slow speed power agitation. Make certain no pigment remains on the bottom of the can. Then combine 4 parts by volume of Part A with 1 part by volume of Part B. Thoroughly agitate the mixture with slow speed power agitation for 2-3 minutes.

If reducer solvent is used, add only after both components have been thoroughly mixed.

Apply paint at the recommended film thickness and spreading rate as indicated below:

Recommended Spreading Rate:

Wet mils:	4.0 – 6.0
Dry mils:	2.0 – 3.0
Coverage:	255 – 384 sq ft/gal approximate

Note: Brush or roll application may require multiple coats to achieve maximum film thickness and uniformity of appearance.

Drying Schedule @ 5.0 mils wet @ 50% RH:

	@50°F	@77°F	@120°F
To touch:	6 hrs	2 hrs	1 hr
To handle:	24 hrs	4 hrs	2 hrs
To Recoat:	24 hrs	4 hrs	2 hrs
Minimum	24 hrs	4 hrs	2 hrs
Maximum	14 days	14 days	14 days
Pot Life:	5 hrs	3 hrs	1 hr

Sweat-in-Time: None required

PERFORMANCE TIPS

When using spray application, use a 50% overlap with each pass of the gun to avoid holidays, bare areas, and pinholes. If necessary, cross spray at a right angle.

Spreading rates are calculated on volume solids and do not include an application loss factor due to surface profile, roughness or porosity of the surface, skill and technique of the applicator, method of application, various surface irregularities, material lost during mixing, spillage, over thinning, climate conditions, and excessive film build.

Excessive reduction of material can affect film build, appearance, and adhesion.

Do not apply the material beyond recommended pot life.

Do not mix previously catalyzed material with new.

In order to avoid blockage of spray equipment, clean equipment before use or before periods of extended down time with R7K15.

Drying time is temperature, humidity, and film thickness dependent.

Always test adhesion by applying a test patch of 2-3 square feet. Allow to dry one week before checking adhesion.

This product is moisture sensitive. Avoid moisture contamination

Temperatures above 77°F will shorten pot life.

Refer to Product Information sheet for additional performance characteristics and properties.

CLEAN UP INSTRUCTIONS

Clean spills and spatters immediately with R7K15. Clean tools immediately after use with R7K15. Follow manufacturer's safety recommendations when using solvent.

SAFETY PRECAUTIONS

Refer to the MSDS sheet before use.

Published technical data and instructions are subject to change without notice. Contact your Sherwin-Williams representative for additional technical data and instructions.

DISCLAIMER

The information and recommendations set forth in this Product Data Sheet are based upon tests conducted by or on behalf of The Sherwin-Williams Company. Such information and recommendations set forth herein are subject to change and pertain to the product offered at the time of publication. Consult your Sherwin-Williams representative to obtain the most recent Product Data Information and Application Bulletin.

WARRANTY

The Sherwin-Williams Company warrants our products to be free of manufacturing defects in accord with applicable Sherwin-Williams quality control procedures. Liability for products proven defective, if any, is limited to replacement of the defective product or the refund of the purchase price paid for the defective product as determined by Sherwin-Williams. NO OTHER WARRANTY OR GUARANTEE OF ANY KIND IS MADE BY SHERWIN-WILLIAMS, EXPRESSED OR IMPLIED, STATUTORY, BY OPERATION OF LAW OR OTHERWISE, INCLUDING MERCHANTABILITY AND FITNESS FOR A PARTICULAR PURPOSE.

Industrial & Marine Coatings

CLASSIFIED UL WATER QUALITY
Drinking Water System Component
ANSI/NSF 61
3JGH

4.56

MACROPOXY® 646 PW

POTABLE WATER EPOXY

PART A	B58WX610	MILL WHITE
PART A	B58LX600	LIGHT BLUE
PART B	B58VX600	HARDENER

PRODUCT INFORMATION

Revised 4/07

PRODUCT DESCRIPTION

MACROPOXY 646 PW EPOXY is a high solids, high build, fast drying, polyamide epoxy classified by UL to ANSI/NSF 61 as a tank lining for potable water storage tanks. The high solids content ensures adequate protection of sharp edges, corners, and welds.

RECOMMENDED USES

- As an interior tank lining for potable water storage tanks of 1,500 gallon minimum tank size.
- Conforms to AWWA D102-03 ICS #1, #2, and #5, and OCS #5***
- Suitable for use with cathodic protection systems

***Refer to respective systems

Potable Water Tank Restrictions
Water Contact Temp: 23°C
Standard Cure; Tanks >=1,500 gal: 2 cts
Forced Cure; Tanks >= 100 gal: 2 cts
Maximum DFT: 6 mils/ct, 2 cts

PRODUCT CHARACTERISTICS

Finish: Semi-Gloss

Color: Mill White and Light Blue

Volume Solids: 72% ± 2%, mixed

Weight Solids: 85% ± 2%, mixed

VOC (EPA Method 24): Unreduced: <250 g/L; 2.08 lb/gal
mixed Reduced 10%: <300 g/L; 2.50 lb/gal

Mix Ratio: 1:1 by volume

Recommended Spreading Rate per coat:

	Standard	AWWA
Wet mils:	7.0 - 13.5	4.2 - 8.3
Dry mils:	5.0 - 10.0*	3.0 - 6.0*
Coverage:	116 - 232	192 - 384

NOTE: brush or roll application may require multiple coats to achieve maximum film thickness and uniformity of appearance.

* See Recommended Systems on reverse side

Drying Schedule @ 7.0 mils wet and 50% RH:

	@ 40°F	@ 77°F	@ 100°F
To touch:	4-5 hours	2 hours	1½ hours
To handle:	48 hours	8 hours	4½ hours
To recoat:			
minimum:	48 hours	8 hours	4½ hours
maximum:	3 months	3 months	3 months
Cure for immersion:	14 days	7 days	4 days

If maximum recoat time is exceeded, scarify surface before recoating.

Drying time is temperature, humidity and film thickness dependent.

For **Potable Water Service**, allow a minimum cure time of 7 days at 77°F prior to placing in service. Sterilize and rinse per AWWA C652.

Pot Life:	10 hours	4 hours	2 hours
Sweat-in-time:	30 minutes	30 minutes	15 minutes

Shelf Life: 36 months, unopened
Store indoors at 40°F to 100°F

Flash Point: 91°F, TCC, mixed

Reducer/Clean Up: Reducer, R7K15

PERFORMANCE CHARACTERISTICS

System Tested: (unless otherwise indicated)
Substrate: Steel
Surface Preparation: SSPC-SP10
1 ct. Macropoxy 646 PW Fast Cure Epoxy @ 6.0 mils dft

Abrasion Resistance:
Method: ASTM D4060, CS17 wheel, 1000 cycles, 1 kg load
Result: 84 mg loss

Adhesion:
Method: ASTM D4541
Result: 1,037 psi

Corrosion Weathering, Zinc Clad II Plus Primer:
Method: ASTM D5894, 36 cycles, 12,000 hours
Result: Rating 10 per ASTM D714 for blistering
Rating 9 per ASTM D610 for rusting

Direct Impact Resistance:
Method: ASTM D2794
Result: 30 in. lb.

Dry Heat Resistance:
Method: ASTM D2485
Result: 250°F

Flexibility:
Method: ASTM D522, 180° bend, 3/4" mandrel
Result: Passes

Humidity Resistance
Method: ASTM D4585, 6000 hrs
Result: No blistering, cracking, or rusting

Immersion: Galvapac/2 cts Macropxy 646 PW)
Method: 5 year potable water
Result: Rating 10 per ASTM D610 for Rusting
Result: Rating 10 Per ASTM D714 for Blistering

Immersion:
Method: 18 months fresh and salt water
Result: Passes, no rusting, blistering, or loss of adhesion

Pencil Hardness:
Method: ASTM D3363
Result: 3H

Water Vapor Permeance:
Method: ASTM D1653, Method B
Result: 1.16 grains/ day

Epoxy coatings may darken or discolor following application and curing.

continued on back

Industrial & Marine Coatings

4.56

Drinking Water System Component ANSI/NSF 61 3JGH

MACROPOXY® 646 PW

POTABLE WATER EPOXY

PART A	B58WX610	MILL WHITE
PART A	B58LX600	LIGHT BLUE
PART B	B58VX600	HARDENER

PRODUCT INFORMATION

RECOMMENDED SYSTEMS

Immersion, Steel:

***AWWA D102-03: Inside Coating System No. 1**
(minimum AWWA DFT 8.0 mils)
1 ct. Macropoxy 646 PW @ 3.0 mils dft
1 ct. Macropoxy 646 PW @ 5.0 mils dft

***AWWA D102-03: Inside Coating System No. 2**
(minimum AWWA DFT 12.0 mils)
1 ct. Macropoxy 646 PW @ 3.0 mils dft
1 ct. Macropoxy 646 PW @ 4.0 mils dft
1 ct. Macropoxy 646 PW @ 5.0 mils dft

***AWWA D102-03: Inside Coating System No. 3**
(minimum AWWA DFT 10.0 mils)
1 ct. Zinc Clad II LV or Plus @ 2.0 mils dft
1 ct. Macropoxy 646 PW @ 3.0 mils dft
1 ct. Macropoxy 646 PW @ 5.0 mils dft

***AWWA D102-03: Inside Coating System No. 5**
(minimum AWWA DFT 10.0 mils)
1 ct. Corothane I Galvapac PW @ 2.0 mils dft
2 cts. Macropoxy 646 PW @ 4.0 mils dft/ct

Steel, forced cure (100 gallon minimum tank size):
2 cts. Macropoxy 646 PW @ 5.0 - 6.0 mils dft/ct
•12 mils maximum film thickness•Curing requirements
•Flash 2 hours @ 75°F
•24 hours @ 150°
•24 hours @ 75°F

Atmospheric, Steel:

***AWWA D102-03: Outside Coating System No. 5**
(minimum DFT 6.0 mils)
1 ct. Macropoxy 646 PW @ 2.0 mils dft
1 ct. Macropoxy 646 PW @ 2.0 mils dft
1 ct. Acrolon 218HS @ 2.0 mils dft

***AWWA D102-03: Outside Coating System No. 6**
(minimum DFT 6.0 mils)
1 ct. Corothane I GalvaPac PW @ 2.0 mils dft
1 ct. Macropoxy 646 PW @ 2.0 mils dft
1 ct. Acrolon 218HS @ 2.0 mils dft

Concrete/Masonry, smooth:
2 cts.Macropoxy 646 PW @ 3.0 - 6.0 mils dft/ct

Refer to UL.com for maximum dft restrictions

The systems listed above are representative of the product's use. Other systems may be appropriate.

DISCLAIMER

The information and recommendations set forth in this Product information Sheet are based upon tests conducted by or on behalf of The Sherwin-Williams Company. Such information and recommendations set forth herein are subject to change and pertain to the product offered at the time of publication. Consult your Sherwin-Williams representative to obtain the most recent Product Data Information and Application Bulletin.

SURFACE PREPARATION

Surface must be clean, dry, and in sound condition. Remove all oil, dust, grease, dirt, loose rust, and other foreign material to ensure good adhesion.
Refer to product Application Bulletin for detailed surface preparation information.

Minimum recommended surface preparation:

Iron & Steel	
Atmospheric:	SSPC-SP2/3
Immersion:	SSPC-SP10/NACE 2, 2-3 mil profile
Concrete & Masonry	
Immersion:	SSPC-SP13/NACE 6-4.3.1 or 4.3.2, or ICRI 03732, CSP 1-3

TINTING

Do not Tint

APPLICATION CONDITIONS

Temperature:	40°F minimum, 110°F maximum (air, surface, and material)
	At least 5°F above dew point
Relative humidity:	85% maximum

Refer to product Application Bulletin for detailed application information.

ORDERING INFORMATION

Packaging:

Part A:	1 and 5 gallon containers
Part B:	1 and 5 gallon containers
Weight per gallon:	12.7 ± 0.2 lb mixed, may vary by color

SAFETY PRECAUTIONS

Refer to the MSDS sheet before use and application bulletin before use.

WARRANTY

The Sherwin-Williams Company warrants our products to be free of manufacturing defects in accord with applicable Sherwin-Williams quality control procedures. Liability for products proven defective, if any, is limited to replacement of the defective product or the refund of the purchase price paid for the defective product as determined by Sherwin-Williams. NO OTHER WARRANTY OR GUARANTEE OF ANY KIND IS MADE BY SHERWIN-WILLIAMS, EXPRESSED OR IMPLIED, STATUTORY, BY OPERATION OF LAW OR OTHERWISE, INCLUDING MERCHANTABILITY AND FITNESS FOR A PARTICULAR PURPOSE.

Industrial & Marine Coatings

CLASSIFIED UL WATER QUALITY
Drinking Water System Component
ANSI/NSF 61
3JGH

4.56A

MACROPOXY® 646 PW

POTABLE WATER EPOXY

PART A	B58WX610	MILL WHITE
PART A	B58LX600	LIGHT BLUE
PART B	B58VX600	HARDENER

APPLICATION BULLETIN

Revised 4/07

SURFACE PREPARATION

Surface must be clean, dry, and in sound condition. Remove all oil, dust, grease, dirt, loose rust, and other foreign material to ensure adequate adhesion.

Carbon Steel, Immersion Service:
Clean and degrease the surface prior to abrasive blasting per SSPC-SP 1 Solvent Cleaning. Methods described in SSPC-SP 1 include solvents, alkali, detergent/water, emulsions, and steam. The surface shall be abrasive blasted to SSPC-SP10/NACE No. 2 Near-White Blast Cleaning with a 2 - 3 mil profile. The anchor pattern shall be sharp with no evidence of a polished surface. The finished surface shall be free of all visible oil, grease, dust, dirt, mill scale, rust, coating, oxides, corrosion products, and other foreign matter with no more than 5% staining. After blasting, all dust and loose residue should be removed from the surface by acceptable means. Coat steel the same day as it is prepared and prior to the formation of rust.

Iron & Steel, Atmospheric Service:
Minimum surface preparation is Hand Tool Clean per SSPC-SP2. Remove all oil and grease from surface by Solvent Cleaning per SSPC-SP1. For better performance, use Commercial Blast Cleaning per SSPC-SP6/NACE 3, blast clean all surfaces using a sharp, angular abrasive for optimum surface profile (2 mils). Prime any bare steel within 8 hours or before flash rusting occurs.

Ductile Iron, Immersion Service:
Refer to National Association of Pipe Fabricators Surface Preparations Standard NAPF 500-03 as follows:

a. NAPF 500-03-01 "Solvent Cleaning"
b. NAPF 500-03-02 "Hand Tool Cleaning"
c. NAPF 500-03-03 "Power Tool Cleaning"
d. NAPF 500-03-04 "Abrasive Blast Cleaning of Ductile Iron Pipe".

Concrete and Masonry, Immersion Service:
Decontamination of the concrete surface requires the removal of oils, grease, wax, fatty acids and other contaminants and may be accomplished by the use of detergent scrubbing with a Sherwin-Williams cleaner and degreaser, low pressure water cleaning (less than 5,000 psi), steam cleaning, or chemical cleaning.The preferred methods for creating a surface profile, including the removal of dirt, dust, laitance and curing compounds, is abrasive blasting or scarifying to achieve an ICRI surface equivalent to CSP1-3. Fill all cracks, voids, and bugholes with Steel-Seam VSE. See ICRI Technical Guideline No. 03732 for additional information.

Previously Painted Surfaces:
If in sound condition, clean the surface of all foreign material. Scarify the surface to create the desired surface profile. Apply coatings on a test area, allowing paint to dry one week before testing adhesion. If adhesion is poor, or if this product attacks the previous finish, removal of the previous coating may be necessary.

APPLICATION CONDITIONS

Temperature:	40°F minimum, 110°F maximum (air, surface, and material) At least 5°F above dew point
Relative humidity:	85% maximum

APPLICATION EQUIPMENT

The following is a guide. Changes in pressures and tip sizes may be needed for proper spray characteristics. Always purge spray equipment before use with listed reducer. Any reduction must be compliant with existing VOC regulations and compatible with the existing environmental and application conditions.

Reducer/Clean Up ..... Reducer R7K15

Airless Spray
Pump 30:1
Pressure ..... 2800 - 3000 psi
Hose ..... 1/4" ID
Tip ..... .017" - .023"
Filter ..... 60 mesh
Reduction ..... As needed up to 10% by volume

Brush
Brush ..... Nylon/Polyester or Natural Bristle
Reduction ..... As needed up to 10% by volume

Roller
Cover ..... 3/8" woven with phenolic core
Reduction ..... As needed up to 10% by volume

Recommended Spreading Rate per coat:

	Standard	AWWA
Wet mils:	4.2 - 8.3	4.2 - 8.3
Dry mils:	3.0 - 6.0*	3.0 - 6.0
Coverage:	192 - 384 sq ft/gal approximate	192 - 384

*See recommended systems on product information page

If specific application equipment is not listed above, equivalent equipment may be substituted.

continued on back

Industrial & Marine Coatings

4.56A

CLASSIFIED UL WATER QUALITY Drinking Water System Component ANSI/NSF 61 3JGH

MACROPOXY® 646 PW

POTABLE WATER EPOXY

PART A	B58WX610	MILL WHITE
PART A	B58LX600	LIGHT BLUE
PART B	B58VX600	HARDENER

APPLICATION BULLETIN

APPLICATION PROCEDURES

Surface preparation must be completed as indicated.

Mix contents of each component thoroughly with power agitation. Make certain no pigment remains on the bottom of the can. Then combine one part by volume of Part A with one part by volume of Part B. Thoroughly agitate the mixture with power agitation. Allow the material to sweat-in as indicated prior to application. Re-stir before using.

If reducer solvent is used, add only after both components have been thoroughly mixed, after sweat-in.

Apply paint to the recommended film thickness and spreading rate as indicated below:

Recommended Spreading Rate per coat:

	Standard	AWWA
Wet mils:	7.0 - 13.5	4.2 - 8.3
Dry mils:	5.0 - 10.0*	3.0 - 6.0*
Coverage:	116 - 232	192 - 384

NOTE: brush or roll application may require multiple coats to achieve maximum film thickness and uniformity of appearance.

* See Recommended Systems on reverse side

Drying Schedule @ 7.0 mils wet and 50% RH:

	@ 40°F	@ 77°F	@ 100°F
To touch:	4-5 hours	2 hours	1½ hours
To handle:	48 hours	8 hours	4½ hours
To recoat:			
minimum:	48 hours	8 hours	4½ hours
maximum:	3 months	3 months	3 months
Cure for immersion:	14 days	7 days	4 days

If maximum recoat time is exceeded, scarify surface before recoating.

Drying time is temperature, humidity and film thickness dependent.

For **Potable Water Service**, allow a minimum cure time of 7days at 77°F prior to placing in service. Sterilize and rinse per AWWA C652.

Pot Life:	10 hours	4 hours	2 hours
Sweat-in-time:	30 minutes	30 minutes	15 minutes

Application of coating above maximum or below minimum recommended spreading rate may adversely affect coating performance.

APPLICATION TIPS

Stripe coat all crevices, welds, and sharp angles to prevent early failure in these areas.

When using spray application, use a 50% overlap with each pass of the gun to avoid holidays, bare areas, and pinholes. If necessary, cross spray at a right angle

Spreading rates are calculated on volume solids and do not include an application loss factor due to surface profile, rough-ness or porosity of the surface, skill and technique of the applicator, method of application, various surface irregularities, material lost during mixing, spillage, over thinning, climatic conditions, and excessive film build.

Excessive reduction of material can affect film build, appearance, adhesion and UL ANSI/ NSF 61 approval.

Do not mix previously catalyzed material with new.

Do not apply the material beyond recommended pot life.

In order to avoid blockage of spray equipment, clean equipment before use or before periods of extended downtime with Reducer R7K15.

Tinting is not recommended for immersion service.

Quik-Kick Epoxy Accelerator is acceptable for atmospheric use.

Do not use Quik-Kick Epoxy Accelerator for immersion service when UL certification is required.

Holiday Detection: Use a wet sponge-type detector such as KD Bird Dog or equivalent equipment per manufacturer's recommendation. Test only cured coating, as solvent entrapment in fresh films may provide false readings.

Refer to Product Information sheet for additional performance characteristics and properties.

CLEAN UP INSTRUCTIONS

Clean spills and spatters immediately with Reducer R7K15.
Clean tools immediately after use with Reducer R7K15.

SAFETY PRECAUTIONS

Refer to the MSDS sheet before use.

DISCLAIMER

The information and recommendations set forth in this Product Data Sheet are based upon tests conducted by or on behalf of The Sherwin-Williams Company. Such information and recommendations set forth herein are subject to change and pertain to the product offered at the time of publication. Consult your Sherwin-Williams representative to obtain the most recent Product Data Information and Application Bulletin.

WARRANTY

The Sherwin-Williams Company warrants our products to be free of manufacturing defects in accord with applicable Sherwin-Williams quality control procedures. Liability for products proven defective, if any, is limited to replacement of the defective product or the refund of the purchase price paid for the defective product as determined by Sherwin-Williams. NO OTHER WARRANTY OR GUARANTEE OF ANY KIND IS MADE BY SHERWIN-WILLIAMS, EXPRESSED OR IMPLIED, STATUTORY, BY OPERATION OF LAW OR OTHERWISE, INCLUDING MERCHANTABILITY AND FITNESS FOR A PARTICULAR PURPOSE.

Industrial & Marine Coatings

Certified to NSF/ANSI 61

6.08

ZINC CLAD PCP ULTRA

WELDABLE INORGANIC ZINC PRECONSTRUCTION PRIMER

PART A	B69A450	BASE
PART B	B69V450	BINDER
PART B	B69V455	FAST CURE BINDER

PRODUCT INFORMATION

6/06

PRODUCT DESCRIPTION

ZINC CLAD PCP-ULTRA is a solvent-based, two-package, inorganic ethyl silicate, zinc preconstruction primer.

- NSF approved to Standard 61 for potable water
- Single coat application
- Provides corrosion protection
- Weldable
- Low fume release during welding
- Fast Dry
- Long pot life - 24 hours (B69V450)

RECOMMENDED USES

Immersion Service- Potable Water: Meets NSF Standards for use in potable water storage tanks. Topcoat with recommended NSF approved coatings- See Recommended Systems

Must use Part B B69V455 only to meet NSF requirements

Acceptable for use over prepared blasted steel.

For protection of steel on marine vessels and off-shore structures during construction.

For areas where welding and heat resistance are required.

PRODUCT CHARACTERISTICS

Finish: Flat

Color: Green-Yellow

Volume Solids: 24% ± 2%, mixed

Weight Solids: 56% ± 2%, mixed

VOC (EPA Method 24): <650g/L; 5.42 lb/gal, mixed

Mix Ratio: 2 components; premeasured 2:3
5 gallons mixed

Recommended Spreading Rate per coat:

Wet mils:	2.0 - 3.5
Dry mils:	0.5 - 0.8
Coverage:	481 - 770 sq ft/gal approximate

Drying Schedule @ 2.0 mils wet @ 50% RH:

	@77°F	@ 100°F	@120°F
B69V450			
To touch:	2 min	1 min	1 min
To handle:	6 min	4 min	4 min
To topcoat:	7 days	6 days	5 days
To cure:	7 days	6 days	5 days
B69V455			
To touch:	2 min	1 min	1 min
To handle:	4 min	2 min	1 min
To topcoat:	7 days	6 days	5 days
To cure:	7 days	6 days	5 days

Drying time is temperature, humidity, and film thickness dependent.

Pot Life:

B69V450	24 hrs	8 hrs	4 hrs
B69V455	8 hrs	2 hrs	1 hr

Sweat-in-time: None required

Shelf Life:

B69A450 A	9 months, unopened
B69V450 B	9 months, unopened
B69V455 B	6 months, unopened
	Store indoors at 40°F to 100°F.

Flash Point: 61°F, Seta Flash, mixed

Reducer/Clean Up:

Below 80°F:	Toluene, R2K1
Above 80°F:	Reducer #58, R7K58

PERFORMANCE CHARACTERISTICS

System Tested: (unless otherwise indicated)
Substrate: Steel
Surface Preparation: SSPC-SP10/NACE 2
1 ct. Zinc Clad PCP-Ultra @ 0.6 mils dft (B69V450)

Adhesion:
Method: ASTM D4541
Result: 2813 psi

Impact Resistance:
Method: ASTM D2794
Result: Direct Impact - 90 in. lbs.
Reverse Impact - 20 in. lbs.

Dry Heat Resistance:
Method: ASTM D2485, method A, water quench test
Result: 750°F

Corrosion Weathering Resistance:
Method: ASTM D5984,6 cycles, 2016 hours
Result: Rating 10 per ASTM D714 for blistering
Rating 10 per ASTM D610 for rusting

Exterior Expsure:
Method: 3 months Kure Beach, N.C
Result: Rating 10 per ASTM D714 for Blistering
Rating 10 per ASTM D610 for Rusting

Flexibility:
Method: ASTM D522, 180° bend
Result: Passes 1/8"

Pencil Hardness:
Method: ASTM D3363
Result: 6H

Salt Fog Resistance:
Method: ASTM B117, 5000 hours
Result: Rating 9 per ASTM D714 for blistering
Rating 9 per ASTM D610 for rusting

Moisture Condensation Resistance:
Method: ASTM D4585, 5000 hours
Result: Rating 10 per ASTM D714 for blistering
Rating 10 per ASTM D610 for rusting

continued on back

Industrial & Marine Coatings

Certified to NSF/ANSI 61

6.08

ZINC CLAD PCP ULTRA

WELDABLE INORGANIC ZINC-RICH PRECONSTRUCTION PRIMER

PART A	B69A450	BASE
PART B	B69V450	BINDER
PART B	B69V455	FAST CURE BINDER

PRODUCT INFORMATION

RECOMMENDED SYSTEMS

Steel/Atmospheric:
1ct. Zinc Clad PCP-Ultra @ 0.5 - 0.8 mils dft.

Steel/Atmospheric:
1ct. Zinc Clad PCP-Ultra @ 0.5 - 0.8 mils dft.
1ct Macropoxy 646 @ 5.0 - 10.0 mils dft.

Steel/Immersion:
1ct. Zinc Clad PCP-Ultra @ 0.5 - 0.8 mils dft.
1-2cts Macropoxy 646 @ 5.0 - 10.0 mils dft.

Recommended topcoats for immersion service:
Dura-Plate 235
Macropoxy 646
MIL-DTL-24441C
TarGuard
MIL-PRF- 23236C

NSF Systems

Steel/Immersion: Potable Water*
1 ct Zinc Clad PCP Ultra @ 0.5 - 0.8 mils dft.**

Acceptable Topcoats	Min tank Size
2cts Tank Clad HS	see data page
2cts Tank Clad HS LT	see data page
2cts Hi-Solids Catalyzed Epoxy	see data page
2cts Macropoxy 646 NSF	see data page
2cts Macropoxy 846	see data page
2cts Dura-Plate 235 NSF	see data page
2cts Dura-Plate UHS	see data page

* Topcoat Required
** Fast Cure Binder B69V455 Required

The systems listed above are representative of the product's use. Other systems may be appropriate.

SURFACE PREPARATION

Surface must be clean, dry, and in sound condition. Remove all oil, dust, grease, dirt, loose rust, and other foreign material to ensure adequate adhesion.

Refer to product Application Bulletin for detailed surface preparation information.

Minimum recommended surface preparation:
Iron/Steel: SSPC-SP10/NACE 2

Prior to topcoating, remove all soluble salts and contaminants. For immersion service, maximum chloride content allowed is 5 µg/cm2.

TINTING

Do not tint.

APPLICATION CONDITION

Temperature:	40°F minimum, 100°F maximum (air, surface, and material)
	At least 5°F above dew point
Relative humidity:	40%-90% maximum

Refer to product Application Bulletin for detailed application information.

ORDERING INFORMATION

Packaging:	5 gallons mixed
Part A:	2 gallons in a 5 gallon can
Part B:	3 gallons in a 5 gallon can
Weight per gallon:	11.79 ± 0.2 lbs., mixed

SAFETY PRECAUTIONS

Refer to the MSDS sheet before use.

Published technical data and instructions are subject to change without notice. Contact your Sherwin-Williams representative for additional technical data and instructions.

DISCLAIMER

The information and recommendations set forth in this Product Data Sheet are based upon tests conducted by or on behalf of The Sherwin-Williams Company. Such information and recommendations set forth herein are subject to change and pertain to the product offered at the time of publication. Consult your Sherwin-Williams representative to obtain the most recent Product Data Information and Application Bulletin.

WARRANTY

The Sherwin-Williams Company warrants our products to be free of manufacturing defects in accord with applicable Sherwin-Williams quality control procedures. Liability for products proven defective, if any, is limited to replacement of the defective product or the refund of the purchase price paid for the defective product as determined by Sherwin-Williams. NO OTHER WARRANTY OR GUARANTEE OF ANY KIND IS MADE BY SHERWIN-WILLIAMS, EXPRESSED OR IMPLIED, STATUTORY, BY OPERATION OF LAW OR OTHERWISE, INCLUDING MERCHANTABILITY AND FITNESS FOR A PARTICULAR PURPOSE.

6.08

ZINC CLAD PCP ULTRA

WELDABLE INORGANIC ZINC PRECONSTRUCTION PRIMER

Industrial & Marine Coatings

Certified to NSF/ANSI 61

PART A	B69A450	BASE
PART B	B69V450	BINDER
PART B	B69V455	FAST CURE BINDER

APPLICATION BULLETIN

6/06

SURFACE PREPARATION

Coatings containing zinc require direct contact between the zinc pigment in the coating and the metal substrate for optimum performance. Surface must be dry, and free from oil, dirt, dust, mill scale, or other contaminants to ensure adequate adhesion.

Iron & Steel (Atmosheric or Immersion Service):
Remove all oil and grease from surface by Solvent Cleaning per SSPC-SP1. Minimum surface preparation is Near White Metal Blast Cleaning per SSPC-SP10/NACE 2. Blast clean all surfaces using a sharp, angular abrasive for optimum surface profile @ 1.5 - 2.0 mils dft. Prime any bare steel the same day as it is cleaned or before flash rusting occurs.

NOTE: If blast cleaning with steel media is used, an appropriate amount of steel grit blast media may be incorporated into the work mix to render a dense, angular surface profile. This method may result in improved adhesion and performance.

Prior to topcoating, remove all soluble salts and contaminants. For immersion service, maximum chloride content allowed is 5 µg/cm2.

APPLICATION CONDITIONS

Temperature:	40°F minimum, 100°F maximum (air, surface, and material) At least 5° above dew point
Relative humidity:	40%-90% maximum

APPLICATION EQUIPMENT

The following is a guide. Changes in pressures and tip sizes may be needed for proper spray characteristics. Always purge spray equipment before use with listed reducer. Any reduction must be compliant with existing VOC regulations and compatible with the existing environmental and application conditions.

Reducer/Clean Up:

Below 80°F:	Toluene, R2K1
Above 80°F:	Reducer #58, R7K58

Airless Spray

Pressure	1800 - 2000 psi
Hose	3/8" ID
Tip	0.015" - 0.019"
Reduction	Not required

Conventional Spray

Gun	Binks 95
Fluid Tip	66
Air Cap	63PB
Atomization Pressure	30-40 psi
Fluid Pressure	10-20 psi
Reduction	Not required

Keep pressure pot at level of applicator to avoid blocking of fluid line due to weight of material. Blow back coating in fluid line at intermittent shutdowns, but continue agitation at pressure pot.

Brush

Brush	For touch up only

If specific application equipment is not listed above, equivalent equipment may be substituted.

continued on back

Industrial & Marine Coatings

Certified to NSF/ANSI 61

6.08

ZINC CLAD PCP ULTRA

WELDABLE INORGANIC ZINC-RICH PRECONSTRUCTION PRIMER

PART A	B69A450	BASE
PART B	B69V450	BINDER
PART B	B69V455	FAST CURE BINDER

APPLICATION BULLETIN

APPLICATION PROCEDURES

Surface preparation must be completed as indicated.

Zinc Clad PCP Ultra comes in 2 premeasured containers which when mixed provides 5 gallons of ready-to-apply material.

Mixing Instructions: Mix contents of each component thoroughly with power agitation. Make certain no pigment remains on bottom of can. Then combine 3 parts by volume of part B with 2 parts by volume of Part A. Thoroughly agitate the mixture with power agitation.

If reducer solvent is used, add only after both components have been thoroughly mixed.

Continuous agitation of mixture during application is required.

Apply paint to the recommended film thickness and spreading rate as indicated below:

Recommended Spreading Rate per coat:

Wet mils:	2.0 - 3.5
Dry mils:	0.5 - 0.8
Coverage:	481 - 770 sq ft/gal approximate

Drying Schedule @ 2.0 mils wet @ 50% RH:

	@77°F	@ 100°F	@120°F
B69V450			
To touch:	2 min	1 min	1 min
To handle:	6 min	4 min	4 min
To topcoat:	7 days	6 days	5 days
To cure:	7 days	6 days	5 days
B69V455			
To touch:	2 min	1 min	1 min
To handle:	4 min	2 min	1 min
To topcoat:	7 days	6 days	5 days
To cure:	7 days	6 days	5 days

Drying time is temperature, humidity, and film thickness dependent.

Pot Life:

B69V450	24 hrs	8 hrs	4 hrs
B69V455	8 hrs	2 hrs	1 hr

Sweat-in-time: None required

Application of coating above maximum or below minimum recommended spreading rate may adversely affect coating performance.

PERFORMANCE TIPS

When using spray application, use a 50% overlap with each pass of the gun to avoid holidays, bare areas, and pinholes. If necessary, cross spray at a right angle.

Occasionally topcoats will pinhole or delaminate from zinc-rich coatings. This is usually due to poor ambient conditions or faulty application of topcoats. This can be minimized by:

- Providing adequate ventilation and suitable application and substrate temperature.
- Avoiding dry spay of topcoat
- If pinholing develops, apply a mist coat of the topcoat, re duced up to 50%. Allow 10 minutes flash off and follow with full coat.
- Apply a wet full coat, but at minimum film build, prior to applying a complete full coat.

Spreading rates are calculated on volume solids and do not include an application loss factor due to surface profile, roughness or porosity of the surface, skill and technique of the applicator, method of application, various surface irregularities, material lost during mixing, spillage, overthinning, climatic conditions, and excessive film build.

Excessive reduction of material can affect film build, appearance, and performance.

Do not mix previously catalyzed material with new.

In order to avoid blockage of spray equipment, clean equipment before use or before periods of extended downtime with Toluene, R2K1

Keep pressure pot level at level of applicator to avoid blocking of fluid line due to weight of material. Blow back coating in fluid line at intermittent shutdowns, but continue agitation at pressure pot.

Application above recommended film thickness may result in mudcracking.

Not recommended for severe acid or alkali exposures.

Immersion Service- Potable Water: Meets NSF Standards for use in potable water storage tanks. Topcoat with recommended NSF approved coatings- See Recommended Systems

Must use Part B B69V455 only to meet NSF requirements

Refer to Product Information sheet for additional performance characteristics and properties.

CLEAN UP INSTRUCTIONS

Clean spills and spatters immediately with R2K1. Clean tools immediately after use with R2K1. Follow manufacturer's safety recommendations when using any solvent.

SAFETY PRECAUTIONS

Refer to the MSDS sheet before use.

Published technical data and instructions are subject to change without notice. Contact your Sherwin-Williams representative for additional technical data and instructions.

DISCLAIMER

The information and recommendations set forth in this Product Data Sheet are based upon tests conducted by or on behalf of The Sherwin-Williams Company. Such information and recommendations set forth herein are subject to change and pertain to the product offered at the time of publication. Consult your Sherwin-Williams representative to obtain the most recent Product Data Information and Application Bulletin.

WARRANTY

The Sherwin-Williams Company warrants our products to be free of manufacturing defects in accord with applicable Sherwin-Williams quality control procedures. Liability for products proven defective, if any, is limited to replacement of the defective product or the refund of the purchase price paid for the defective product as determined by Sherwin-Williams. NO OTHER WARRANTY OR GUARANTEE OF ANY KIND IS MADE BY SHERWIN-WILLIAMS, EXPRESSED OR IMPLIED, STATUTORY, BY OPERATION OF LAW OR OTHERWISE, INCLUDING MERCHANTABILITY AND FITNESS FOR A PARTICULAR PURPOSE.

TANK LOGO

Bill of Material				
MK#	QTY.	Description	Spec.	Ref. Drawing

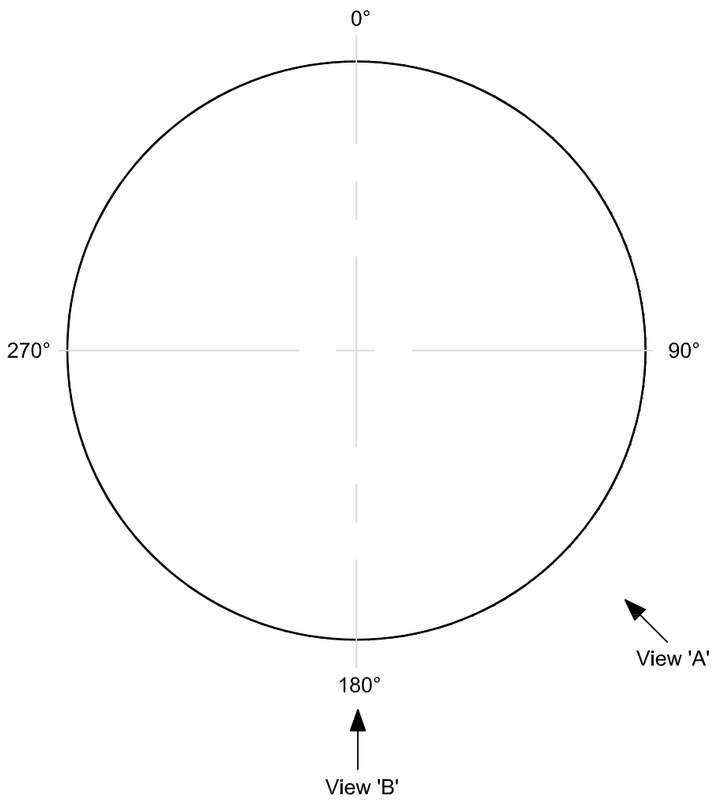

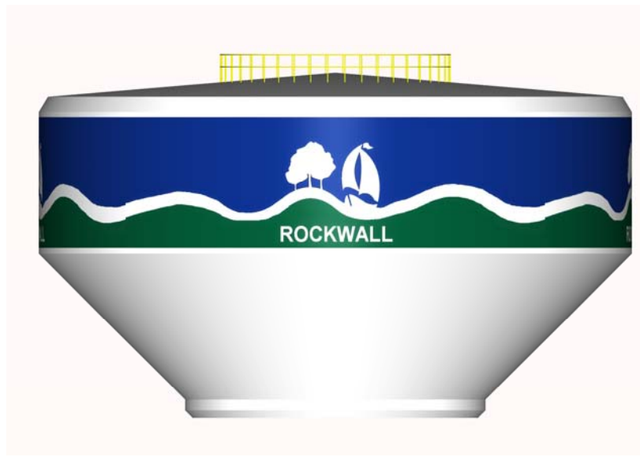

View 'A'

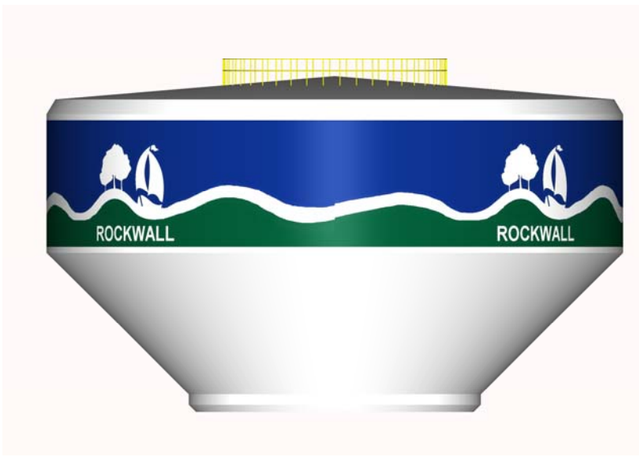

View 'B'

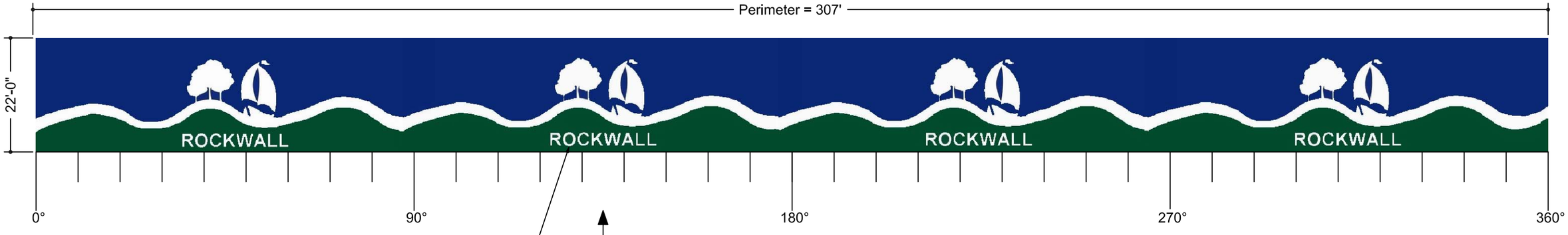

LANDMARK 1665 Harmon Road, Ft. Worth, TX. 76177 817-439-9002			LOGO LAYOUT	
Rev.	Revision Description	Date	CITY OF ROCKWALL, TEXAS 2.0 MG ELEVATED WATER STORAGE TANK	
			Date 12 Jan 08	LOGO-1
			Scale:	
			Chk.	
			Dwn. RAG	

COUNTRY LANE 2.0 MG
ELEVATED STORAGE TANK

CITY OF ROCKWALL, TEXAS

SPECIFICATION SECTION: 2.12.20

OPERATIONS & MAINTENANCE MANUAL

WATERLINE MATERIALS

TABLE OF CONTENTS:

1. **GATE VALVE**
2. **FIRE HYDRANT**

SUPPLIER / SUBCONTRACTOR

TRI DAL UTILITIES
CONTACT: ELLIS BAKER
540 COMMERCE STREET
SOUTHLAKE, TEXAS 76092
(817) 481-2886

GENERAL CONTRACTOR

LANDMARK STRUCTURES I, LP
1665 HARMON ROAD
FORT WORTH, TEXAS 76177
(817) 439-8888

GATE VALVE

TABLE OF CONTENTS:

A. DATA SHEETS

B. INSTALLATION, OPERATION AND MAINTENANCE MANUAL

MANUFACTURER: MUELLER

MODEL #: SERIES 2360

SIZE: 8”

Mueller® Resilient Wedge Gate Valves

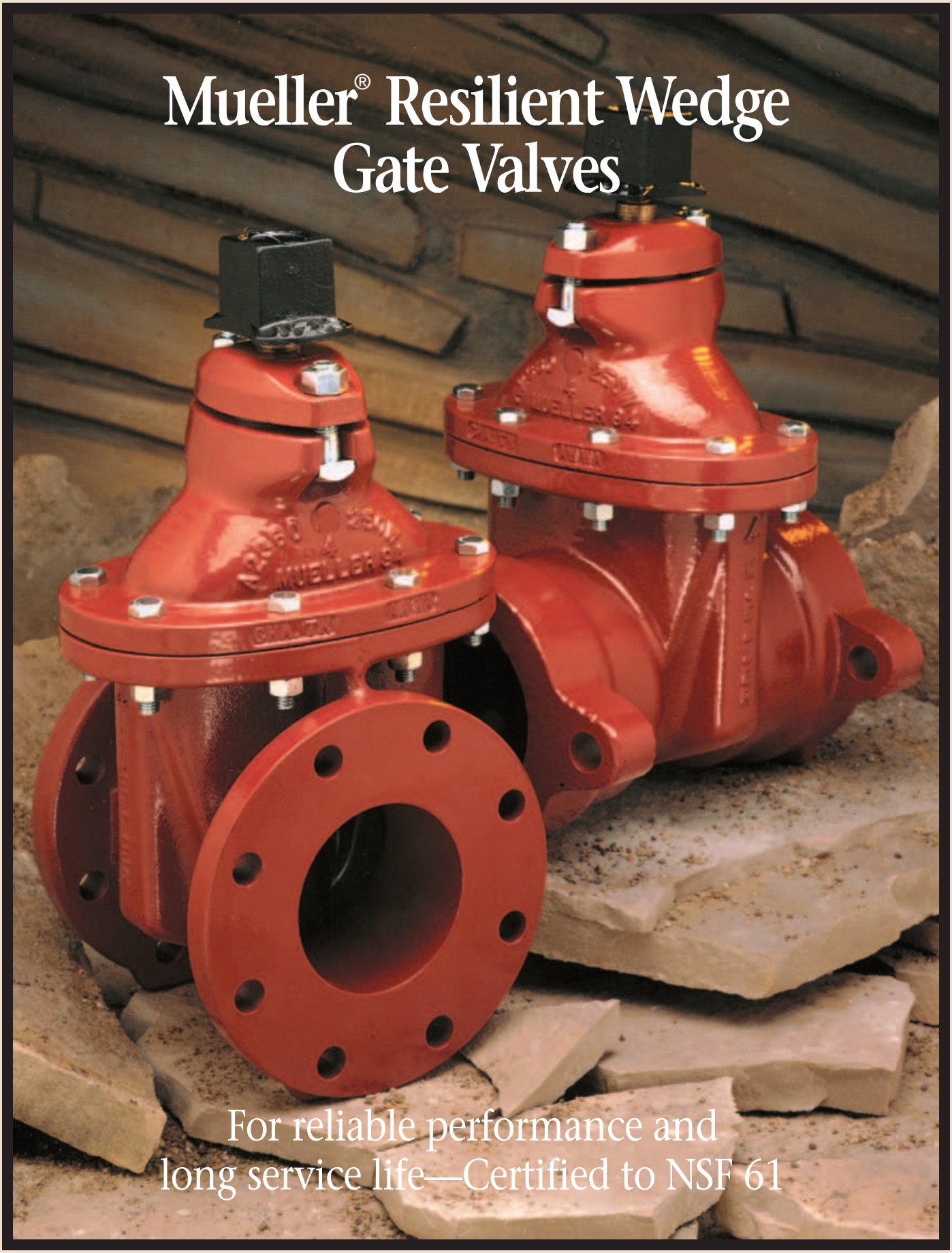

For reliable performance and long service life—Certified to NSF 61

Mueller Co.

Mueller® Resilient Wedge Gate Valve

2"-12" sizes*

10-YEAR LIMITED WARRANTY

Triple O-rings & Dirt Seal — A dirt seal at the top keeps out debris. Two O-rings above the stem thrust collar bearing area isolate it from ground contaminants, and one below isolates it from the waterway. The upper two O-rings and the dirt seal can easily be replaced in the line while the valve is under pressure in the fully open position.

Forged bronze stem and thrust collar — This time-tested Mueller design has two thrust washers and has repeatedly proven its superior strength over cast stems.

Bronze stem nut — The nut is electrically isolated from the iron in the wedge for corrosion resistance. The nut is held tightly in place to resist stem binding.

O-ring — Provides superior bonnet seal.**

Polymer wedge guide bearing caps — Provide bearing surface between the encapsulated wedge and the interior epoxy coating, lowering operating torque and extending service life of the valve.

Oversized, full port opening, smooth waterway — The bottom of the waterway has no grooves or recesses to collect sedimentor debris and compromise the seal. Accommodates full-sized shell cutters with ample clearance during tapping operations.

Mueller® PRO-GARD™ Epoxy Coating System — The superior fusion-bonded (thermosetting) powder epoxy covers the interior and exterior with a thickness of 10 mils nominal. The powder epoxy coating fully complies with ANSI/AWWA Standard C550.

Integral legs — Flats cast in the bottom of the valve body let the valve stand upright in storage or during installation.

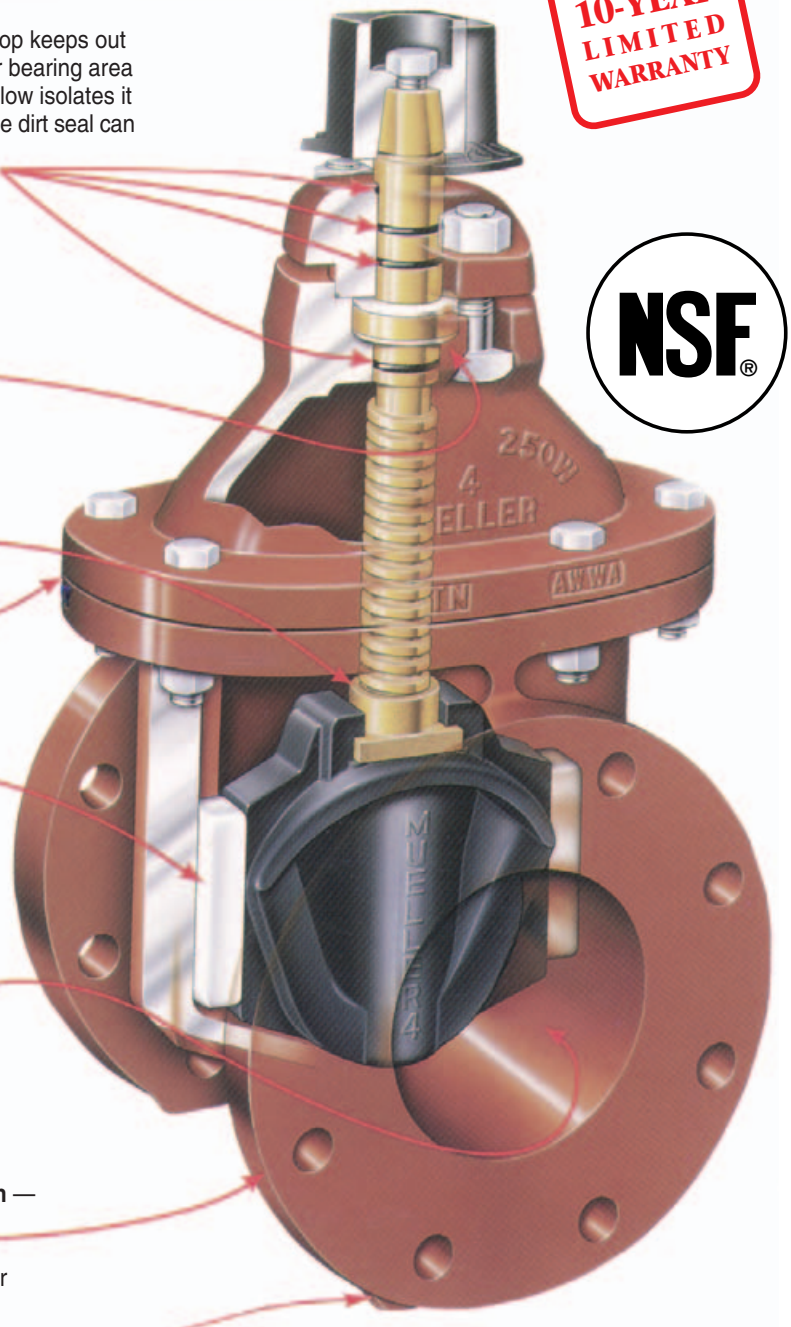

NSF®

Triple Listed

- Valve fully complies with **AWWA C509**
- Listed by **Underwriters Laboratory Inc.** and **ULC**
- Approved by **Factory Mutual Corp.**

*Contact Mueller for sizes up to 48"
**2" - 3" valves use flat bonnet flange gasket

Optimized design for consistent performance and long-lasting corrosion resistance

■ The Mueller® 2360 Series™ Resilient Wedge Gate Valve is a symmetrical design with refinements to enhance reliability and service life. Special features protect critical areas of the valve from damage, wear and corrosion. The entire valve is certified to ANSI/NSF Standard 61.

100% elastomer-encapsulated symmetrical wedge

The iron wedge is completely encapsulated by an elastomer, without thin spots or voids. There are no uncoated or weak places for corrosion to start or for the elastomer to begin to peel away.

Extra-long guides stabilize the wedge and prevent binding. Polymer bearing caps protect the wedge guides and interior epoxy coating from damage or wear, even after thousands of cycles under full differential pressure and flow.

The shape of the iron wedge casting and the elastomeric encapsulation are specially designed to provide a positive stop, without overstressing the elastomer or epoxy lining. This avoids splitting the elastomeric encapsulation or crushing the epoxy, and the operator is given positive feedback indicating when the valve is fully closed. It also assures a consistent number of turns to operate the valve.

Superior powder epoxy coating

The valve is covered inside and out with Mueller® PRO-GARD™ Epoxy Coating, an exceptional fusion-bonded powder epoxy.

The powder epoxy protective coating acts as a physical, chemical and electrical barrier between the valve's base metal and the surroundings.

Mueller products receiving our PRO-GARD powder epoxy coating.

Mueller PRO-GARD Epoxy Coating is suitable for field overcoating and touch-up without sanding, special surface preparation or the application of heat. The powder epoxy is non-toxic and imparts no taste to water.

Strength, selection and versatility

The valve is rated at 250 psig working pressure, 25% higher than that stipulated by the AWWA standard, and hydrostatically shell tested at 500 psig. The computer-aided design allows all areas of the valve to be optimized for strength, removing excess weight. Yet the valve includes Mueller's extra-strength safety factors that surpass the minimums set by AWWA standards. The 2360 series valve fully complies with AWWA C509.

End connections include combinations of flanged, mechanical joint, slip-on, radial and threaded. Most end connections are available in the full range of sizes from 2" through 12". Tapping, cut-in, post indicator (PIV), and OS&Y valves are also offered. The valve can be installed in any position.

Resilient wedge gate valves are carefully packaged and palletized prior to shipment, helping assure the valves with their powder epoxy coating arrive to you undamaged.

Mueller plant has ISO 9001 certification

The valve manufacturing facility in Chattanooga has the highest ISO rating available — your assurance of quality products and services.

Resilient wedge valves to 48" are available

Refer to the Mueller Water Products Catalog for information about Mueller® 2361 Series™ Ductile Iron Resilient Wedge Valves 14"-48". These larger valves share many of the same features contributing to easy operation, enhanced reliability and long service life as the 2360 Series valves described in this brochure.

Styles and sizes

The Mueller® 2360 Series™ Resilient Wedge Gate Valve 2"-12" is available as a non-rising stem (NRS) valve in 2"-12" sizes ("A" catalog number prefix), and as an OS&Y valve in 2-1/2"-16" sizes ("R" prefix°). It is also available in tapping ("T"prefix) and cut-in ("C" prefix) valve styles. ▲NOTE: All valves with mechanical joint ends are available less accessories.

A UL/FM post indicator style valve ("P" prefix) in 4"-16" sizes and selected types of end connections is available (also as a tapping valve—"I" prefix).

Resilient wedge valves with flange x flange, MJ x flange, and MJ x MJ ends in sizes 14"- 48" (14"-18" also with slip-on x slip-on and slip-on x flange) are offered with many of the features described in this brochure, but may vary in design details.

DIMENSIONS FOR MUELLER® RESILIENT WEDGE GATE VALVE — INCHES
(Refer to catalog for dimensions of valves 14" - 48")

Dimensions*	Valve size — Nominal sizes							
	2"	2-1/2"	3"	4"	6"	8"	10"	12"
A NRS OS&Y Open	9.88 —	12.38 19.50	12.38 19.25	14.19 23.68	18.00 31.38	21.50 38.50	25.50 47.00	28.62 53.50
E Diameter of handwheel	6.00	6.00	8.00	11.00	13.00	14.00	16.00	16.00
F Depth of socket	—	—	—	3.70	3.70	3.70	3.89	3.89
H Radial — end-to-end	10.25	10.75	11.75	13.43	15.91	18.40	—	—
I Depth of socket	3.50	3.69	4.12	4.46	5.46	6.20	—	—
K MJ— end-to-end	8.50	—	9.00	10.00	11.50	12.50	14.75	14.88
L Depth of socket	2.50	—	2.50	2.50	2.50	2.50	2.50	2.50
Q Flanged — face-to-face	7.00	7.50	8.00	9.00	10.50	11.50	13.00	14.00
R Outside diameter	6.00	7.00	7.50	9.00	11.00	13.50	16.00	19.00
V Threaded end-to-end	5.88	5.88	6.88	—	—	—	—	—
AA OS&Y Closed	—	15.75	15.50	19.00	24.50	29.50	35.75	40.50
BB Slip-on — end-to-end	—	—	—	12.81	14.81	17.88	18.43	18.62
CC Depth of socket	—	—	—	4.12	4.38	5.62	5.62	5.62
EE OS&Y Handwheel diameter	—	7.00	7.00	10.00	12.00	14.00	16.00	16.00
FF AG x AG— end-to-end	—	—	—	12.68	15.12	16.94	18.06	18.90
AG x Flg — end-to-end	—	—	—	10.84	12.81	14.22	15.53	16.45
AG x MJ — end-to-end	—	—	—	11.34	13.31	14.72	16.41	16.89
KK Restraint — connection assy.	—	—	—	2.75	3.75	3.75	3.75	3.75
YY MJ x Flg. — end-to-end	—	—	—	9.50	11.00	12.00	13.88	14.44
GGG Slip-on x Flg.—end-to-end	—	—	—	10.91	12.66	14.69	15.72	16.31
Turns to open — NRS OS&Y	8 —	11 11	11 11	14 14	20.5 20.5	26.5 27	33 33.5	38.5 39
Weight* — Flg. x Flg.	37	71	73	95	154	250	402	502
MJ x Flg.**	—	—	—	115	168	275	418	526
MJ x MJ**	40	—	83	120	186	280	436	546
Slip-on x Flg.	—	—	—	92	152	250	405	526
Slip-on x Slip-on	—	—	—	90	151	247	392	513
Rad. x Rad.	35	65	67	96	155	260	—	—
Thd. x Thd.	31	60	62	—	—	—	—	—
AG x AG	—	—	—	119	162	256	380	475
AG x Flg	—	—	—	107	149	225	365	450
AG x MJ	—	—	—	108	169	294	395	565

*All dimensions are in inches. All weights are for NRS valves; in pounds and are approximate.
**Weight includes accessories.

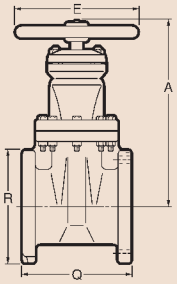

Flange x Flange
A-2360-6

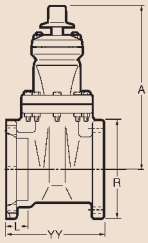

Mechanical Joint x Flange
A-2360-16▲▲
T-2360-16 (Tapping Valve)▲▲

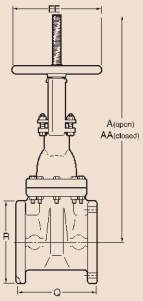

OS&Y
Flange x Flange
R-2360-6

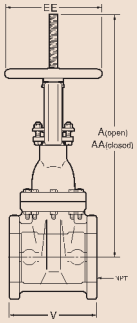

OS&Y
Threaded x Threaded
R-2360-8

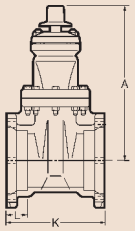

Mechanical Joint x
Mechanical Joint
A-2360-20▲▲
A-2360-25 (w/ transition gaskets)

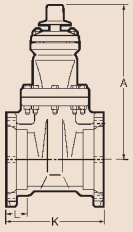

D-150 Mechanical Joint x
D-150 Mechanical Joint
C-2360-54 (Duck Tipped)++
C-2360-55 (Plain Tipped)++

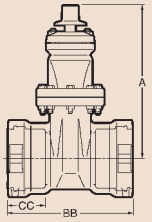

Slip-on x Slip-on
A-2360-38+▲▲

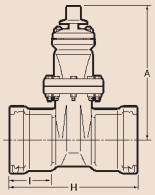

Radial x Radial
A-2360-37

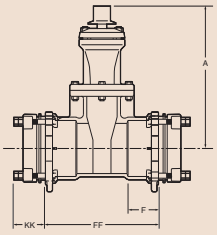

AquaGrip x AquaGrip
A-2361-77***

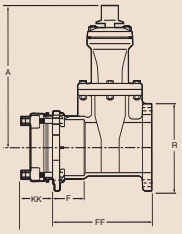

AquaGrip x Flange
A-2361-76***

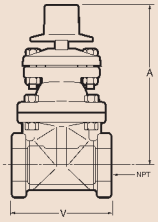

Threaded x Threaded
A-2360-8

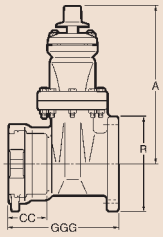

Slip-on x Flange
A-2360-41+▲▲

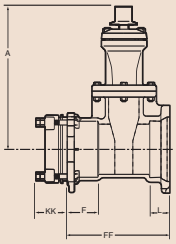

AquaGrip x Mechanical Joint
A-2361-78***

▲ Specialty valve styles not illustrated.

\+ Socket depths have been increased on the slip-on style to enhance the pipe joint.

▲▲ Also available without accessories or gaskets.

++ Bonding screws optional.

o All sizes "R" prefix valves are 2360 Series.

*** Valves with AquaGrip connections are thin-wall ductile iron per ANSI/AWWA C515.

Mueller Co.

Main Office — Decatur, IL
Water Division: 1-800-423-1323
www.muellercompany.com
e-mail: moreinfo@muellercompany.com
Canada — Mueller Canada Inc., Milton, Ontario 1-905-878-0541

All products must be installed and maintained in accordance with applicable instructions and/or standards.

Form 11744-Rev. 5/06-20M-1

Copyright 1995 Mueller Co.

Printed in U.S.A.

APPENDIX A

Installation, Operation, and Maintenance of Resilient-Seated Gate Valves

This appendix is for information only and is not a part of AWWA C509.

SECTION A.1: GENERAL

Resilient-seated gate valves form a significant component part of many fire-fighting or water-distribution systems. Failure of a resilient-seated gate valve in such systems, either caused by faulty installation or improper maintenance, could result in extensive damage and costly repairs. In addition, many resilient-seated gate valves are installed in buried-service or underground applications. Problems with or malfunctions of the valves caused by faulty installation or improper maintenance can result in extensive and costly unearthing operations to effectively correct or eliminate the problem. Many resilient-seated gate-valve problems and failures can be traced back to improper handling, storage, installation, operation, or maintenance procedures.

SECTION A.2: UNLOADING

All valves should be unloaded carefully; a soft sling around the body is recommended to prevent damage to the valve and its protective coating. Each valve should be carefully lowered from the truck to the ground; it should not be dropped. Valves should not be lifted or unloaded using chains, slings, or forklift fork(s) engaging the valve actuator or handwheel, or passing through the valve waterway. In the case of larger valves, forklifts or slings around the body of the valve or under the skids should be used for unloading. Only hoists and slings with adequate load capacity to handle the weight of the valve or valves should be used. Hoists should not be hooked into or chains fastened around yokes, gearing, motors, cylinders, or handwheels. Failure to carefully follow these recommendations is likely to result in damage to the valve.

SECTION A.3: INSPECTION PRIOR TO INSTALLATION

Resilient-seated gate valves should be inspected at the time of receipt for damage in shipment. The initial inspection should verify compliance with specifications, direction of opening, size and shape of operating nut, number of turns to open or close, and type of end connections. A visual inspection of the seating surfaces should be performed to detect any damage in shipment or scoring of the seating surfaces. Inspection personnel should look for bent stems, broken handwheels, cracked parts, loose bolts, missing parts and accessories, and any other evidence of mishandling during shipment. Each valve should be operated through one complete opening-and-closing cycle in the position in which it is to be installed.

SECTION A.4: STORAGE

Whenever practical, valves should be stored indoors. If outside storage is required, valves should be protected from the weather, sunlight, ozone, and foreign materials. In colder climates where valves may be subject to freezing temperatures, it is absolutely essential to prevent water from collecting in the valves. Failure to do so may result in a cracked valve casting or deterioration of the resilient seat material.

SECTION A.5: INSTALLATION

Instructions supplied by manufacturers should be reviewed in detail before valves are installed. At the jobsite prior to installation, each valve should be visually inspected and any foreign material in the interior portion of the valve should be removed. A detailed inspection of the valve as outlined in Sec. A.3 should be performed prior to installation.

Sec. A.5.1 Bolts

All bolts should be checked for proper tightness and protected by the installer to prevent corrosion, either with a suitable paint, by polyethylene wrapping, or other suitable means of corrosion protection.

Sec. A.5.2 Underground Installation

Valves in water-distribution lines shall, where practical, be located in easily accessible areas.

A.5.2.1 During installation, there is the possibility of foreign materials inadvertently entering the valve. Foreign material can damage internal working parts during operation of the gate valve. For this reason, gate valves should be installed in the closed position. Each valve should be placed on firm footing in the trench to prevent settling and excessive strain on the connection to the pipe. Piping systems should be supported and aligned to avoid damage to the valve.

A.5.2.2 A valve box or vault should be provided for each valve used in a buried-service application. The valve box should be installed so as not to transmit shock loads or stress to the valve. The valve box should be centered over the operating nut of the valve with the box cover flush with the surface of the finished area or such other level as directed by the owner. Valve boxes should be designed so that a traffic load on the top of the box is not transmitted to the valve.

A.5.2.3 Valves buried in unusually deep trenches should have special provisions for operating the valve. Either a riser on the stem to permit use of a normal key or a notation on valve records that a long key will be required.

A.5.2.4 When valves with exposed gearing or operating mechanisms are installed belowground, a vault designed to allow pipe clearance and prevent settling on the pipe should be provided. The operating nut should be accessible from the top opening of the vault with a valve key. The size of the vault should provide for easy removal of the valve bonnet and internal parts of the valve for purposes of repair. Consideration should be given to the possible entry of groundwater or surface water and to the need to provide for the disposal thereof.

Sec. A.5.3 Aboveground Installations

Valves installed aboveground or in a plant piping system should be supported and aligned to avoid damage to the valves. Valves should not be used to correct the misalignment of piping.

Sec. A.5.4 Inspection

After installation and before pressurization of the valve, all pressure-containing bolting (bonnet, seal plate, packing gland, and end connections) should be inspected for adequate tightness to prevent leakage. In addition, an inspection should be made for adequate tightness of all tapped and plugged openings to the valve interior.

Proper inspection at this time will minimize the possibility of leaks after pressurization of the piping system.

Sec. A.5.5 Hydrostatic testing

To prevent time lost searching for leaks, it is recommended that valve excavations not be backfilled until after pressure tests have been made. After installation, it is desirable to hydrostatically test newly installed piping sections, including valves, at some pressure above the system design pressure. The test pressure should not exceed the rated working pressure of the valve. After the test, steps should be taken to relieve any trapped pressure in the body of the valve. The resilient-seated gate valve should not be operated in either the opening or closing direction at differential pressures above the rated working pressure. It should be noted that valves seat better at or near the rated working pressure of the valve. It is also recognized that wear or foreign material may damage valve seating surfaces and may cause leakage (Ref. AWWA C600).

Sec. A.5.6 Records

Upon completion of the installation, valve location, size, make, type, date of installation, number of turns to open, direction of opening, and other information deemed pertinent should be entered on permanent records.

Sec. A.5.7 Application Hazards

Resilient-seated gate valves should not be installed in applications or for service other than those recommended by the manufacturer. The following subsections for precautions are not all inclusive but will help avoid some application hazards.

a. Resilient-seated gate valves should not be installed in lines where service pressure will exceed the rated working pressure of the valve.

b. Resilient-seated gate valves should not be used for throttling service unless the design is specifically recommended for that purpose or approved in advance by the manufacturer.

c. Resilient-seated gate valves should not be used in applications that are exposed to freezing temperatures.

d. Pipe, fittings, and valves installed in underground pipelines are generally joined with push-on or mechanical joints. These joints are considered unrestrained-type joints because no significant restraint against longitudinal separation is provided. Gate valves should not be installed at a dead end or near a bend in a pipeline without proper and adequate restraint to support the valve and prevent it from blowing off

the end of the line. Rigid piping systems incorporating flanged valves are not recommended for buried service. Thrust blocks, restrained joints, or other means of restraint are needed on or adjacent to valves on pipelines or where unusual conditions exist, such as high internal pressures, adjacent fittings, or unstable soils.

e. To prevent damage, 3-in. (75-mm) and 4-in. (100-mm) NPS resilient-seated gate valves should not be operated with input torques greater than 200 ft-lb (270 N·m). Gate valves 6-in. (150-mm) NPS to 12-in. (300-mm) NPS should not be operated with input torques greater than 300 ft-lb (406 N·m). For sizes larger than 12 in., consult the manufacturer.

f. For tapping applications, tapping valves are recommended.

SECTION A.6: INSPECTION AND MAINTENANCE

Sec. A.6.1 Valve Exercising

Each valve should be operated through a full cycle and returned to its normal position on a time schedule designed to prevent a buildup of tuberculation or other deposits that could render the valve inoperable or prevent a tight shutoff. The interval of time between operations of valves in critical locations, or valves subjected to severe operating conditions, should be shorter than that for less important installations, but can be whatever time period is found to be satisfactory based on local experience. The number of turns required to complete the operation cycle should be recorded and compared with permanent installation records to verify full gate travel.

When using portable auxiliary power actuators with input torque capacities exceeding the maximum operating torques recommended in Sec. A.5.7g, extreme care should be taken to avoid the application of excessive torque to the valve stem. If the actuator has a torque-limiting device, it should be set below the values in Sec. A.5.7g. If there is no torque-limiting device, the recommended practice is to stop the power actuator three or four turns before the valve is fully opened or fully closed and complete the operation manually.

Maintenance should be performed at the time a malfunction is discovered. A recording system should be adopted that provides a written record of valve location, condition, maintenance, and each subsequent inspection of the valve.

Sec. A.6.2 Inspection

Each valve should be operated through one complete operating cycle. If the stem action is tight, the operation should be repeated several times until proper operation is achieved. With the gate in the partially open position, a visual inspection should be performed, where practical, to check for leakage at all joints, connections, and areas of packing or seals. If leakage is observed, all defective O-rings, seals, gaskets, or end-connection sealing members should be replaced. If the leakage cannot be corrected immediately, the nature of the leakage should be reported promptly to those who are responsible for repairs. If the valve is inoperable or irreparable, its location should be clearly established to save time for repair crews. The condition of the valve and, if possible, the gate position, should be reported to personnel responsible for repairs. In addition, fire departments and other appropriate municipal departments should be informed that the valve is out of service.

Sec. A.6.3 Record Keeping

To carry out a meaningful inspection and maintenance program, it is essential that the location, make, type, size, and date of installation of each valve be recorded. Depending on the type of record-keeping system used, other information may be entered in the permanent record. When a resilient-seated gate valve is inspected, an entry should be made in the permanent record indicating the date of inspection and condition of the valve. If repair work is necessary, it should be indicated, and on completion of the work, the nature of the repairs and date completed should be recorded.

SECTION A.7: REPAIRS

Leakage, broken parts, hard operation, and other major defects should be corrected by a repair crew as soon as possible after the defect has been reported. If repairs are to be performed in the field, the repair crews should take a full complement of spare parts to the jobsite. Provisions should be made to isolate the defective valve from water pressure and relieve internal trapped pressure prior to performing any corrective maintenance. Disassembly of the valve should be performed in accordance with the procedure supplied by the manufacturer. After repair of the valve, the operating mechanism should be cycled through one complete operating cycle. With full line pressure applied to the valve in the open position, an

inspection should be made to detect leakage in the areas around the seal plate, bonnet, packing gland, and body-end connections. A record should be made to indicate that the valve has been repaired and is in working condition. Any markings indicating that the valve is inoperable should be removed. In addition, fire departments and other appropriate municipal departments should be informed of the satisfactory repair of the valve.

FIRE HYDRANT

TABLE OF CONTENTS:

A. DATA SHEETS

B. OPERATING INSTRUCTIONS

MANUFACTURER: MUELLER

MODEL #: SUPER CENTURION 250

SIZE: 4 ½”

Mueller® Super Centurion 250™ Fire Hydrant

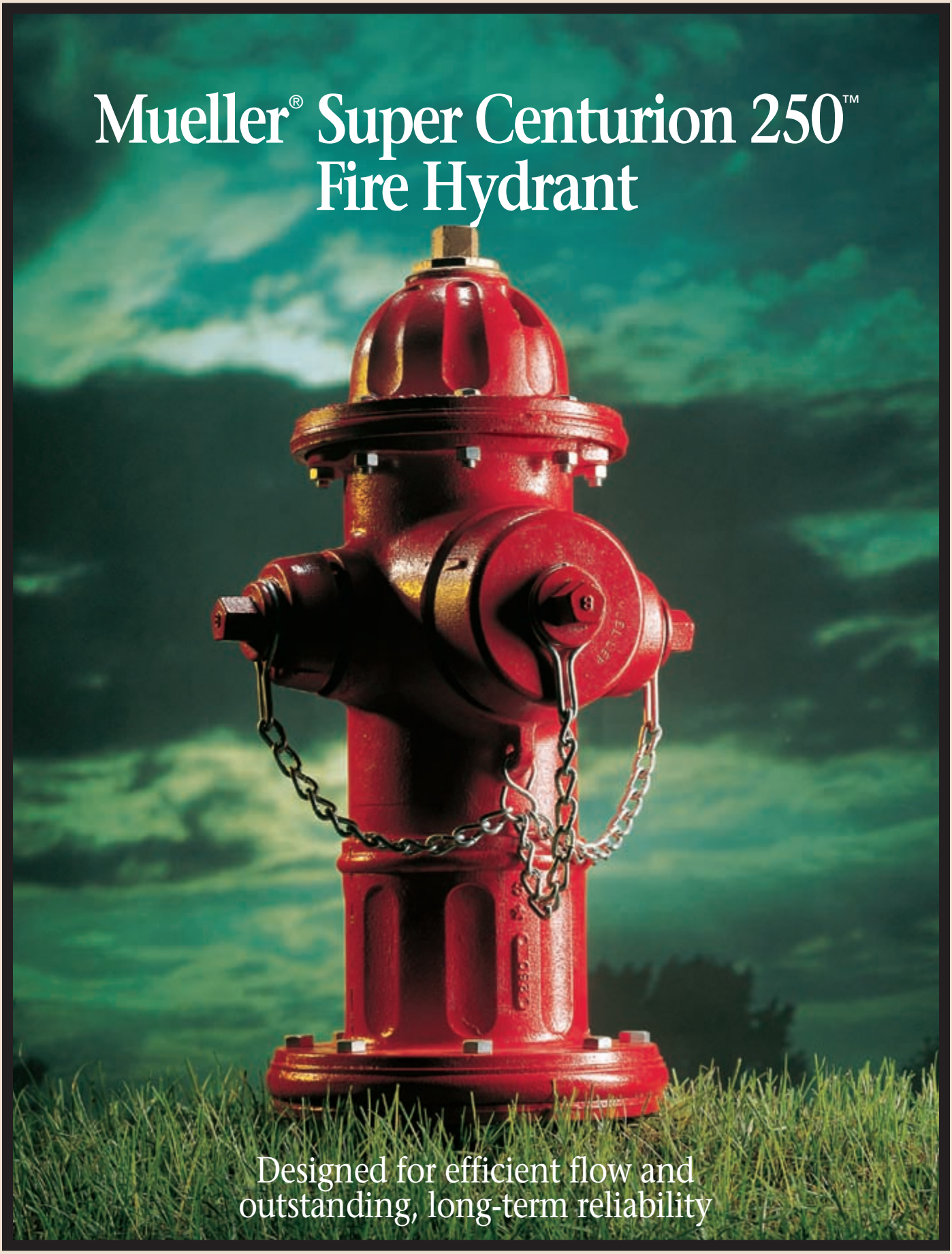

Designed for efficient flow and outstanding, long-term reliability

Mueller Co.

Mueller® Super Centurion 250™ Fire Hydrant...250 psig rating, high flow, dependable performance, 10-year limited warranty...and convenient, reversible main valve

Performance is the real test of a fire hydrant. Proven flow characteristics, 250 psig rating, and easy operation and maintenance are among the features of the Mueller® Super Centurion 250™ 3-Way Fire Hydrant. Plus, the hydrant is backed by a 10-year limited warranty on materials and workmanship, and our plant is ISO 9001 certified, the highest level available.

- 250 psig working pressure; 500 psig test pressure.
- Convenient, reversible main valve doubles service life.
- Advanced safety coupling and flange design reduce traffic damage to hydrant. Convenient replacement kit available.
- Stainless steel safety stem coupling resists corrosion and assures a tight connection between stem sections.
- Efficient hydraulic design provides maximum flow.
- Hose and pumper nozzles are threaded in and field-replaceable.
- Forced lubrication system and anti-friction washer ease operation.
- Main valve is easily removed from either the bonnet flange or ground line flange.

- *Fully conforms to AWWA Standard C502*
- *Underwriters Laboratories Listed*
- *Factory Mutual Approved*

From bonnet to shoe, performance is built in

Dry-top design, with unique, self-oiling system, provides automatic, positive lubrication for easy operation, even after years of service. Lubricant is forced over all stem threads and bearing surfaces in the operating mechanism each time the hydrant is operated. Dual O-ring seals prevent lubricant loss during shipping, storage or installation and keep water away from stem threads and bearing surfaces when the hydrant is in use. An anti-friction washer and automatic lubrication of the thrust collar add to easy operation.

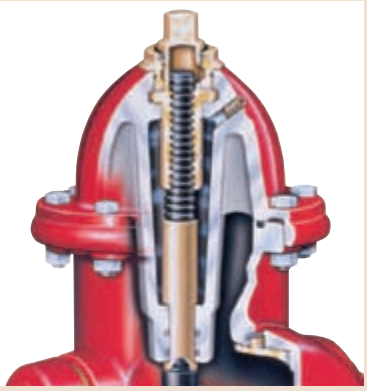

Hose and pumper nozzles are threaded-in for easy field replacement if damaged, or for changeover to different thread style. A special locking method makes installation simple and secure. The nozzles can be faced in any direction by loosening the safety flange bolts and rotating the upper barrel assembly.

Improved safety flange and stainless steel stem coupling perform more predictably to protect the main connection from traffic induced damage and minimize damage to the hydrant. If struck by a vehicle, the safety flange breaks away below the ground flange area and the safety stem coupling *pulls apart*. No loose pieces can fall into the lower barrel where they could affect main valve or drain operation. The high strength stainless steel safety coupling resists corrosion and assures a tight connection between the stem sections during normal hydrant operation. Upon traffic impact, the coupling tears away, leaving the lower stem below ground level where it cannot be depressed by a vehicle tire, and the main valve remains closed. Service is restored quickly and easily without excavation by replacing the safety flange and coupling using a convenient repair kit.

Reversible, compression-type main valve closes with water pressure for positive sealing. Double drain valves are force flushed each time the hydrant is operated and provide drainage of the barrel. A special wrench allows removal of the main valve and seat ring from either bonnet or ground level flange. The main valve is made of durable rubber which provides a long service life, yet is reversible, providing a convenient spare in place.

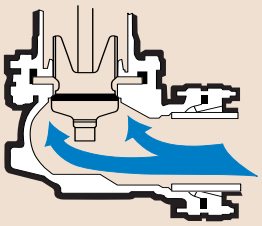

Shoe is designed for maximum flow and easy connection with its smooth transitional contours, extended neck and integral anti-rotation pads, allowing use of standard tee-head bolts. The shoe also has large blocking pads for easier setting and two lugs for strapping. (Strapping lugs are not provided on flanged connections.) The inside of the shoe is covered with Mueller HP® Epoxy Coating. The drain ring housing, lower main valve plate and its retaining nut are also covered with epoxy. This thermosetting epoxy forms a tough, corrosion-resistant barrier to chemicals, physical impact and electrical currents.

O-ring sealed flanges at the bonnet, ground line and shoe simplify maintenance by eliminating gasket adhesion at these points, making disassembly easier. The O-rings are easier than flat gaskets to position during reassembly, and provide superior pressure handling.

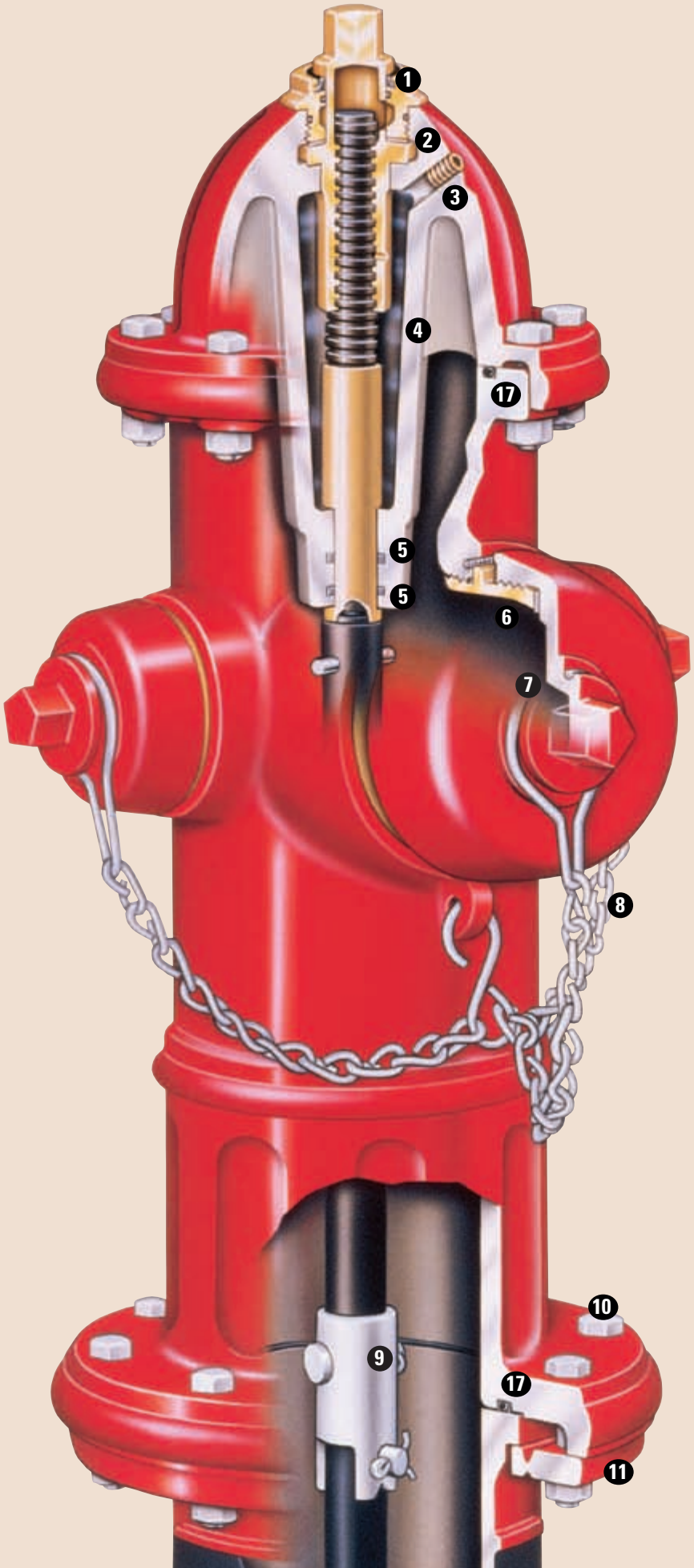

1 **Hold-down nut** — features integral weather seal. Prevents unauthorized removal of hold-down nut or bronze operating nut. Resilient wiper seal prevents water entry and protects from freezing; material resistant to sunlight deterioration. O-ring provides second level seal.

2 **Anti-friction washer** — helps assure easy operation over life of hydrant.

3 **Oil filler plug** — permits visual check of oil level. Allows addition of oil without removing bonnet.

4 **Sealed oil reservoir** — O-ring sealed to prevent leakage. Lubricant is forced over stem threads and bearing surfaces each time hydrant is operated.

5 **Dual O-ring seals** — seal in lubricant; seal out water.

6 **Field-replaceable hose and pumper nozzles** — O-ring sealed; threaded in place and retained by stainless steel locks.

7 **Full flow openings** — large, smooth radius hose and pumper openings reduce friction loss.

8 **Heavy-duty, non-kinking chains** — special chain loop permits free turning of cap.

9 **Stainless steel safety stem coupling** — provides a tight, corrosion resistant connection during normal operation. If vehicle hits hydrant, coupling pulls free without breaking into pieces, preventing stem or main valve damage. Designed so a tire cannot depress stem and open main valve.

10 **Zinc-plated bolts and nuts** — protect against corrosion.

11 **Safety flange** — breaks cleanly to help prevent barrel damage, but strong enough to withstand normal handling. Allows economical repair, adding of extension section, rotation or changing of upper barrel without excavation.

250 psig working pressure rating — compatible with today's trend toward higher pressure system components.

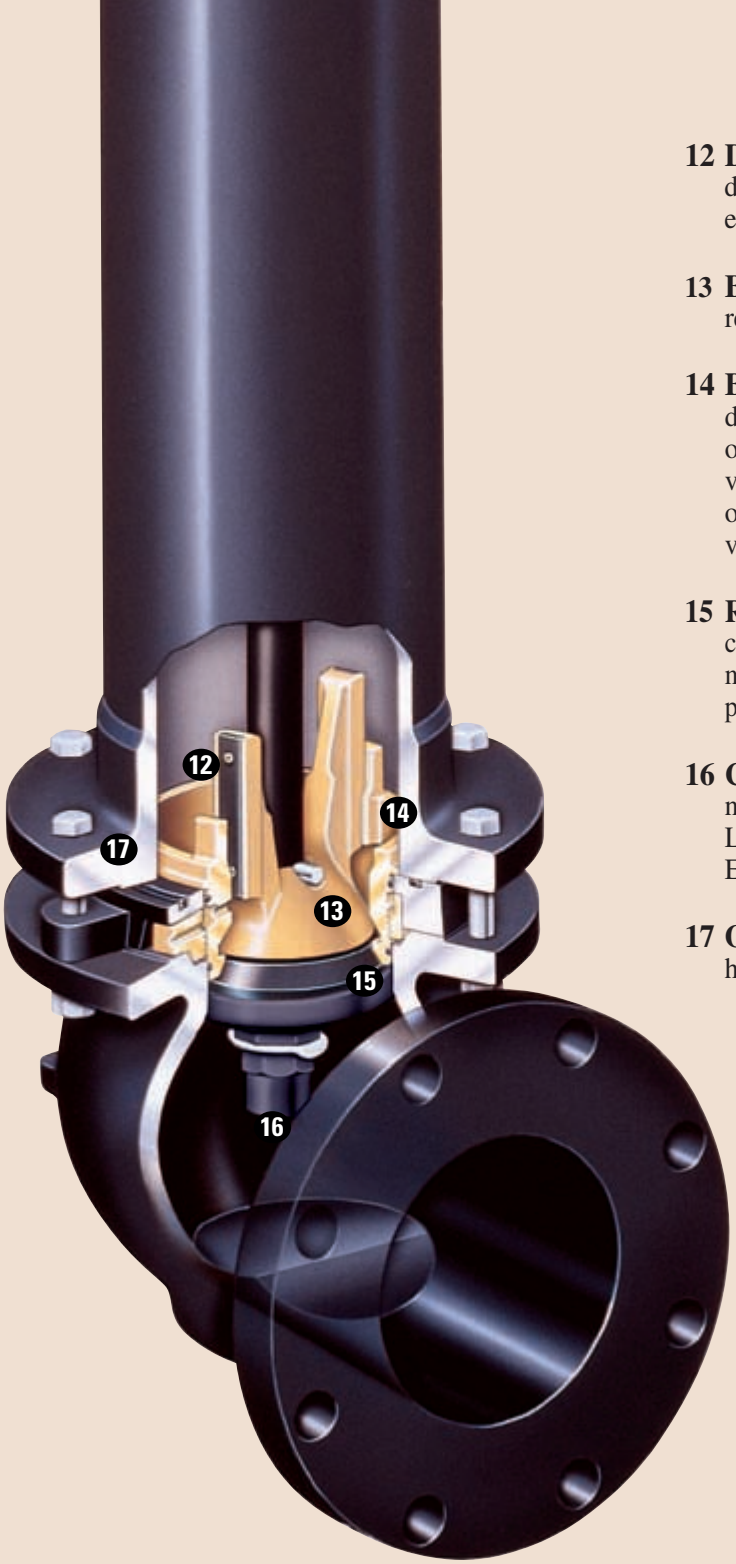

12 Drain valve facings — specially designed, long-life plastic facings provide effective sealing.

13 Bronze upper valve plate — conical design reduces turbulence.

14 Bronze seat ring — threaded into bronze drain ring and O-ring sealed. Can be removed or installed from above ground. Double drain valves force-flush drain openings to keep them open for effective barrel drainage. Bronze drain valves are integral parts of main valve assembly.

15 Reversible, compression-type main valve — closes with pressure for positive seal. Rubber material has long service life, yet is reversible, providing a convenient spare in place.

16 Cap nut — retains main valve. Sealed by cap nut gasket to prevent corrosion of stem threads. Locked in place by a stainless steel lock washer. Epoxy coated to resist corrosion.

17 O-ring flange seals — superior pressure handling, easier disassembly and maintenance.

Contoured shoe — designed for maximum flow. Extended neck and anti-rotation pads allow use of standard tee-head bolts.

Mueller HP® Epoxy Coating— covers shoe interior, main valve lower plate and its retaining cap nut. Drain ring housing is also covered to resist corrosion and deposits, and ease main valve removal.

Main valve operation

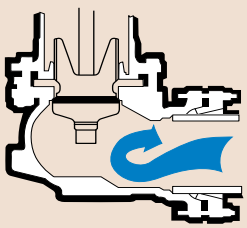

Closed — main valve held closed by operating nut and water pressure; barrel is dry.

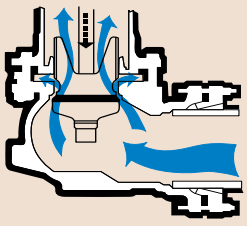

Opening — water pressure force-flushes double drain valves and drain openings; establishes drainage field around hydrant.

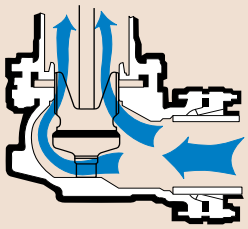

Fully open — main valve guides seal drain valves closed.

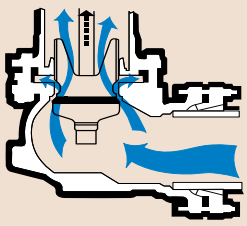

Closing — water pressure again force-flushes drain valves.

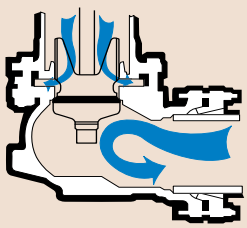

Fully closed — drain valves are open to allow drainage of barrel.

Mueller® Centurion® Fire Hydrant

250 psig working pressure — 500 psig test pressure

A-421	4-1/2"	three-way	2 hose nozzles and 1 pumper nozzle
A-423	5-1/4"	three-way	2 hose nozzles and 1 pumper nozzle

200 psig working pressure — 400 psig test pressure

(Many of the same features as the Centurion 250™ hydrant)

A-420	4-1/2"	two-way	2 hose nozzles
A-422	5-1/4"	two-way	2 hose nozzles
A-424	4-1/2"	one-way	1 pumper nozzle
A-425	5-1/4"	two-way	2 pumper nozzles

Storz pumper nozzle option —

- Available for 5" pumper nozzles, an integral storz connection allows the fire department to connect its pumper hose to the hydrant with a quick, quarter-turn action.
- No thread alignment, cross threading or leakage problems.

4-way with monitor elbow —

- Monitor style eliminates a possible leak path with separate monitor nozzle attachment.
- All parts interchangeable with Mueller Super Centurion 250 hydrant.
- 250 psi working pressure; 500 psi test pressure.
- Full flow 4-way openings: 4" monitor elbow, one 4-1/2" pumper nozzle, two 2-1/2" hose nozzles.

Sizes and types of inlet connections

Size of Hydrant	Aqua-Grip™ System IPS/DIPS	Flanged*	Mech. Joint	D-150 Mech. Joint	Slip-On
4-1/2"	6"**	4", 6"	4", 6", 8"	4", 6"	6"
5-1/4"	6"**	4", 6"	4", 6", 8"	4", 6"	6"

(Auxiliary gate valves with flanged outlet and choice of inlet can be attached to hydrant with flanged inlet.)

*Available with vertical or horizontal inlet.
**Two styles available: IPS (PVC, PE, steel) or DIPS (DI, PVC, PE).

Mueller accessories

A-359-00 seat wrench — universal fit; used to remove main valve and seat ring from bonnet level or ground line. Wrench self-centers on barrel flanges.

A-367 brass sleeve — protects O-rings from damage when the bonnet is removed from the upper stem.

A-311 operating wrench — operates nozzle caps, pin- and lug-type hose couplings, hydrant operating and hold-down nuts.

A-51 hydrant lubricating oil — 10.5 oz. can of all-weather oil exactly fills oil reservoir.

Ordering hydrants, accessories, or repair kits
For complete ordering information refer to the Mueller Water Distribution Products Catalog (available on-line).

Hydrant repair kits

Having everything you need in a convenient kit helps make routine maintenance easier and periodic hydrant upgrading simpler. Kits are available for five different hydrant sections. Specific kits include:

1 Bonnet repair kit

Weather seal.
Bonnet O-ring.
Stem O-rings.
Bonnet flange O-ring and gasket.†
Hydrant lubricating oil.
Hold-down nut O-ring.
Anti-friction washer.

2 Safety flange repair kit

Stem coupling.
Flange gasket.
Replacement bolts and nuts.
Bonnet flange O-ring and gasket.†
Safety flange.
Hydrant lubricating oil.

3 Extension kit

Extension barrel.
Flange.
Flange O-ring and gasket.†
Hydrant lubricating oil.
Stem coupling and hardware.
Bonnet flange O-ring and gasket.†
Extension stem.
8 bolts and nuts.

4 Main valve kit

Top seat O-rings.
Bottom seat O-rings.
Main valve.††
Bronze seat ring.
Lower valve plate.††
Cap nut seal.
Lock washer.

5 Shoe repair kit

Drain valve facings.
Top seat O-ring.
Lower valve plate.††
Bottom seat O-ring.
Drain valve facing screws.
Drain ring housing O-ring and gasket.
Hydrant lubricating oil.
Cap nut seal.
Main valve.††
Lock washer.
Shoe nuts and bolts.

†Kit includes both O-ring and gasket to accommodate either 250 psig or 200 psig style hydrants.
††Reversible style main valve and lower valve plate — must be used together when replacing non-reversible style parts.

Manufactured under one or more of the following:
U.S. Patent No. 4,717,178; 4,842,246.

Mueller Co.

Main Office — Decatur, IL
Water Division: 1-800-423-1323
Canada — Mueller Canada Inc., Milton, Ontario 1-905-878-0541
www.muellercompany.com
e-mail: moreinfo@muellercompany.com

All products must be installed and maintained in accordance with applicable instructions and/or standards.

Form 10818-Rev.10/05-20M-1
Copyright 1995 Mueller Co.
Printed in U.S.A.

Operating Instructions for

MUELLER® SUPER CENTURION® FIRE HYDRANT

MAIN OFFICE and PLANT
500 West Eldorado Street
Decatur, Illinois 62522
www.muellercompany.com

! WARNING

Before removing any bolts(s) holding the hydrant together, shut off gate valve to isolate hydrant from main water source. Loosen (do not remove) one nozzle cap two turns and check for water under pressure inside hydrant - bleed off any pressure, then remove nozzle cap completely. Open hydrant main valve completely. A continuous flow of water, no matter how slight, indicates hydrant is not properly isolated from the main water supply, and that problem must be corrected before any hydrant disassembly can proceed. Disassembly of hydrant with pressurized water acting against the main valve could result in unexpected ejection of hydrant parts, debris or high-pressure water stream, which could cause serious bodily injury.

Copyright 1997-MUELLER CO.
Form 11929- Rev. 07/05-3M-1
Printed in U.S.A.

MUELLER® SUPER CENTURION® FIRE HYDRANT

Inspection and Maintenance

Beginning with the 1997 date codes, there are two styles of Super Centurion Fire Hydrants:

1) the Super Centurion 250™ Hydrant and
2) the Super Centurion 200™ Hydrant.

This manual applies to all Mueller Super Centurion Fire Hydrants with date codes 1997 or later. However, the 250 psig rated 3-way Hydrant, which has O-ring Seals at the Bonnet and Ground Line Flanges, is shown in all illustrations and O-rings are referred to in the instructions. When working on a 2-way or 1-way Hydrant, which is rated at 200 psig, the foregoing references to O-rings should be understood to mean the flat gaskets that are standard with 2-way and 1-way Hydrants.

NOTE: HYDRANTS MADE PRIOR TO 1997 WILL CONTINUE TO USE FLAT GASKETS WHEN REPLACING THESE GASKETS AT THE BONNET AND SAFETY FLANGES.

All Hydrants produced in 1997 and after have a stainless steel Safety Coupling, Reversible Main Valve (patent pending) and two Shoe Bolts used to retain the Drain Ring Housing.

The 1997 style stainless steel Safety Coupling is compatible with the Hydrants made prior to 1997.

Non-reversible Main Valves for pre-1997 Hydrants are available. To retrofit such a Hydrant with the 1997 style Reversible Main Valve, both the Main Valve and the Lower Valve Plate must be changed to the 1997 style part.

For Hydrants made prior to 1997, see the operating instructions for the Centurion® Fire Hydrant (Form 10492).

Inspection

To ensure their readiness for instantaneous use, it is recommended that Fire Hydrants be inspected and tested at six-month intervals.

Inspect visually for damaged or missing parts.

Loosen one Nozzle Cap slightly and tighten the others. Open Hydrant fully. Tighten loose Nozzle Cap when water starts to flow. Remove Oil Filler Plug to check oil level. If oil level is low, fill as shown on page 3. Check all flange connections for leaks. Turn Operating Nut to fully CLOSED position.

If water or oil overflowed from Oil Filler Hole, remove Bonnet and replace O-rings in both the Bonnet and the Hold Down Nut. Inspect and clean Stem, and replace it if corroded or pitted. Check oil level. Replace Bonnet and test for leaks.

Use A-367 Brass Sleeve when removing or replacing Bonnet or Hydrant Barrel to protect stem O-rings.

Remove one Nozzle Cap, stand on the side of Hydrant opposite the cap removed, open Hydrant fully, and flush Barrel and Hydrant Lateral. Turn Operating Nut to fully CLOSED position.

Remove all Nozzle Caps. Clean and lubricate threads.

Examine inside of Barrel to make certain Drain Valves have completely drained water from Barrel. If water fails to drain from Barrel, it may be caused by one or more of the following conditions:

1. Water Table in ground is higher than drains.
2. When Hydrant was installed, coarse gravel was not placed around Drains, in locations where ground has a make up such that it will not absorb water.
3. Drains are stopped by some foreign material.
4. Failure to leave Cap off of Hydrant to allow air to enter so Barrel will drain.

The foregoing procedure introduces full line pressure to Drain Valves. It provides the best method for cleaning Drain Valves using water pressure.

IMPORTANT - Initial installation of Hydrant MUST BE MADE PROPERLY so Safety Flange will function properly. Hydrant should be blocked at ground line and around Shoe using concrete or similar substance to prevent ground from giving way when Hydrant is struck.

For additional information on Hydrant anchorage, blocking, and drainage, see AWWA Standard C600 and Manual M17.

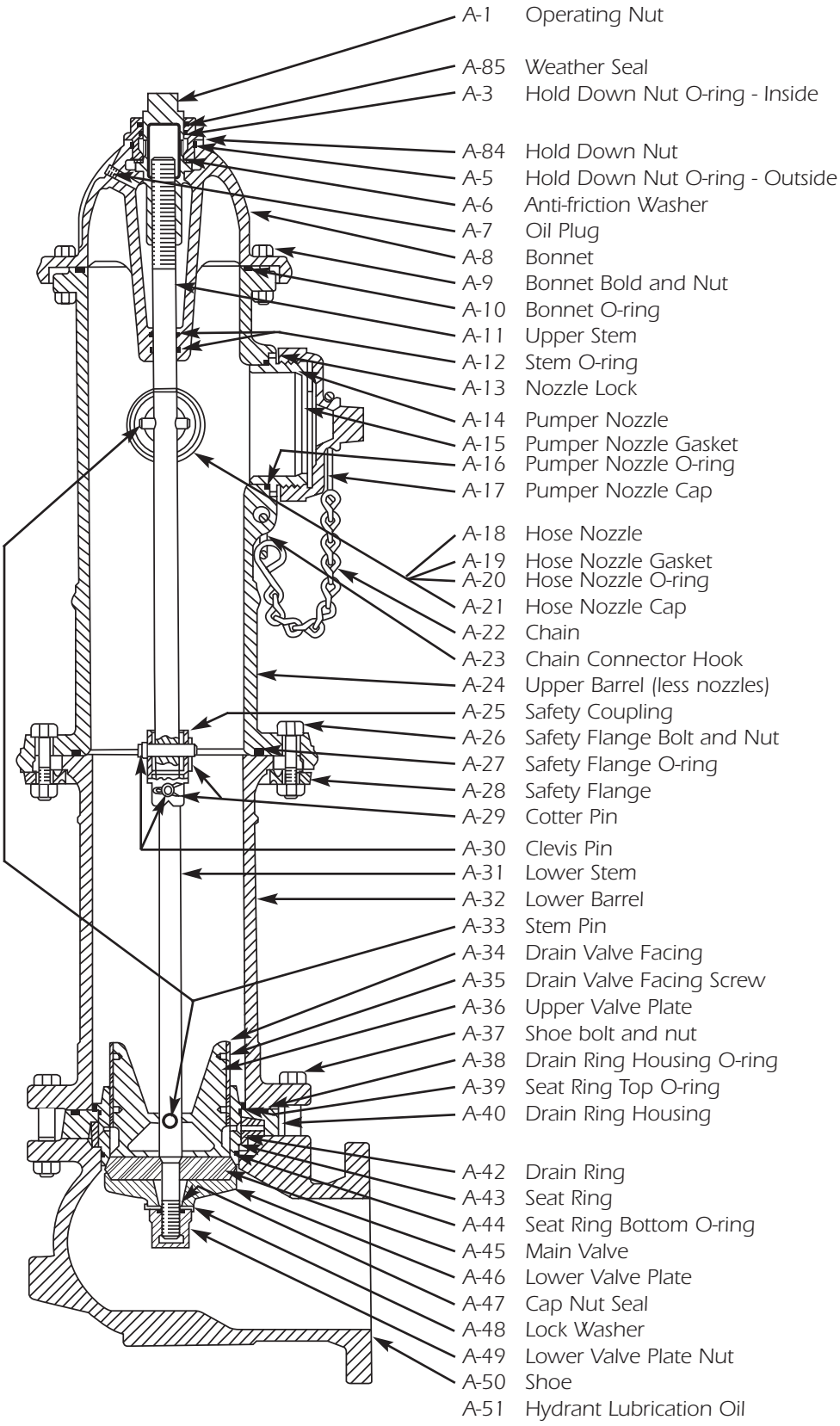
A-1 Operating Nut
A-85 Weather Seal
A-3 Hold Down Nut O-ring - Inside
A-84 Hold Down Nut
A-5 Hold Down Nut O-ring - Outside
A-6 Anti-friction Washer
A-7 Oil Plug
A-8 Bonnet
A-9 Bonnet Bold and Nut
A-10 Bonnet O-ring
A-11 Upper Stem
A-12 Stem O-ring
A-13 Nozzle Lock
A-14 Pumper Nozzle
A-15 Pumper Nozzle Gasket
A-16 Pumper Nozzle O-ring
A-17 Pumper Nozzle Cap
A-18 Hose Nozzle
A-19 Hose Nozzle Gasket
A-20 Hose Nozzle O-ring
A-21 Hose Nozzle Cap
A-22 Chain
A-23 Chain Connector Hook
A-24 Upper Barrel (less nozzles)
A-25 Safety Coupling
A-26 Safety Flange Bolt and Nut
A-27 Safety Flange O-ring
A-28 Safety Flange
A-29 Cotter Pin
A-30 Clevis Pin
A-31 Lower Stem
A-32 Lower Barrel
A-33 Stem Pin
A-34 Drain Valve Facing
A-35 Drain Valve Facing Screw
A-36 Upper Valve Plate
A-37 Shoe bolt and nut
A-38 Drain Ring Housing O-ring
A-39 Seat Ring Top O-ring
A-40 Drain Ring Housing
A-42 Drain Ring
A-43 Seat Ring
A-44 Seat Ring Bottom O-ring
A-45 Main Valve
A-46 Lower Valve Plate
A-47 Cap Nut Seal
A-48 Lock Washer
A-49 Lower Valve Plate Nut
A-50 Shoe
A-51 Hydrant Lubrication Oil

MUELLER® SUPER CENTURION® FIRE HYDRANT

Filling Oil Reservoir

CAUTION: *Always fill the oil reservoir with the bonnet installed, the hydrant in its normal upright position, and the main valve fully closed. If the hydrant is filled with lubricant under any other circumstances, excess lubricate can overfill the Bonnet and create a pressure lock. This could result in damage to the seals or Bonnet or prevent proper hydrant operation.*

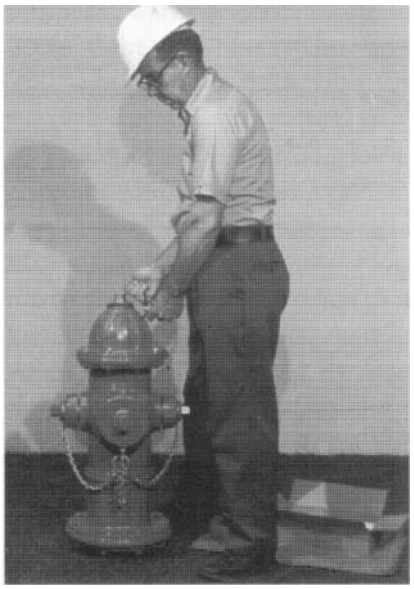

1. Remove Oil Filler Plug and check oil level. Oil should be level with Oil Filler Plug Hole.

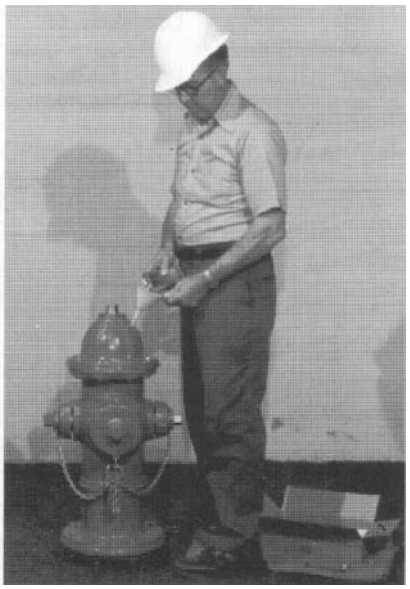

2. If oil is low, use a small funnel to add MUELLER Hydrant Lubricant

3. When oil is level with Oil Filler Plug Hole, replace Oil Filler Plug.

1. Loosen Nuts on Safety Flange Bolts.

2. Turn Operating Nut slightly in the opening direction to relieve compression between Barrel sections.

3. Rotate Upper Barrel section as desired.

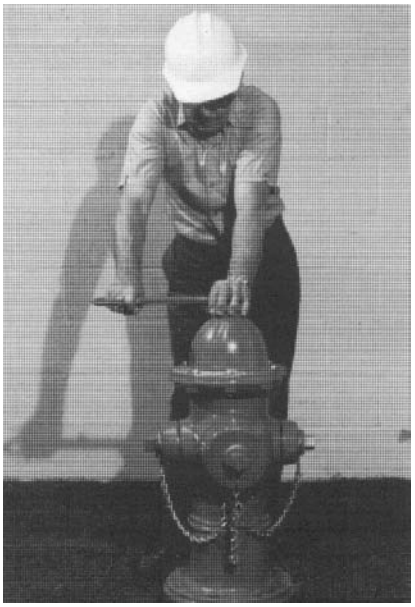

4. Tighten Operating Nut, turning in closing direction.

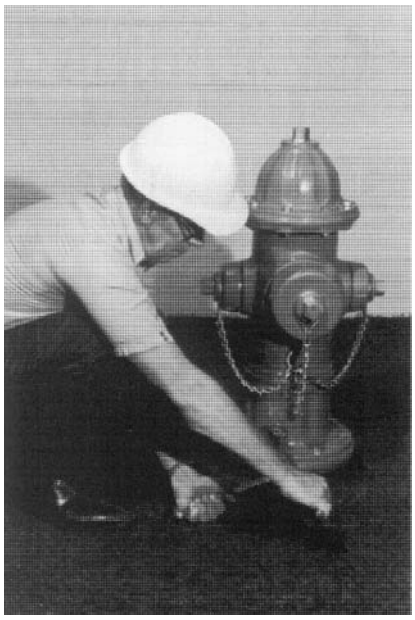

5. Tighten Safety Flange Bolts.

6. Turn Operating Nut in closing direction to make sure Main Valve is closed tightly, then turn in opening direction approximately 1/4 turn to relieve tension on operating mechanism.

MUELLER® SUPER CENTURION® FIRE HYDRANT

Replacing Safety Stem Flange and Safety Stem Coupling

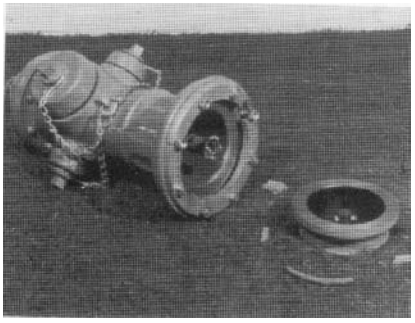

1. Mueller Hydrant with Upper Barrel knocked over by truck. Note broken pieces of Safety Flange lying on ground.

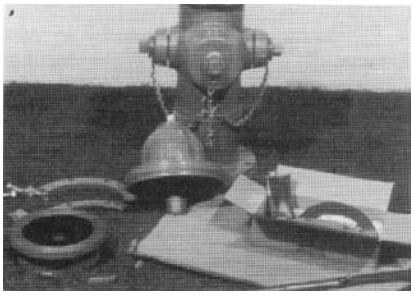

2. Remove stainless steel Cotter Pin from stainless steel Clevis Pin. Remove Clevis Pin and Safety Coupling from Upper Stem. Unbolt and remove broken Safety Flange from Upper Barrel. Remove Hold Down Nut, Anti-Friction Washer, and Operating Nut from Bonnet. Lubricate Brass Sleeve and slide over threaded Stem end to prevent O-ring damage. Unbolt Bonnet from Upper Barrel. Slide Upper Stem out of Bonnet and remove Brass Sleeve.

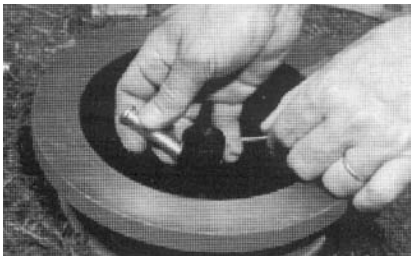

3. Remove stainless steel Cotter Pin from stainless steel Clevis Pin in Lower Stem (throw away the old Clevis Pin and Cotter Pin).

CAUTION: ALWAYS FILL THE OIL RESERVOIR WITH THE BONNET INSTALLED, THE HYDRANT IN ITS NORMAL UPRIGHT POSITION, AND THE MAIN VALVE FULLY CLOSED. IF THE HYDRANT IS FILLED WITH LUBRICANT UNDER ANY OTHER CIRCUMSTANCES, EXCESS LUBRICANT CAN OVERFILL THE BONNET AND CREATE A PRESSURE LOCK. THIS COULD RESULT IN DAMAGE TO THE SEALS OR BONNET, OR PREVENT PROPER HYDRANT OPERATION.

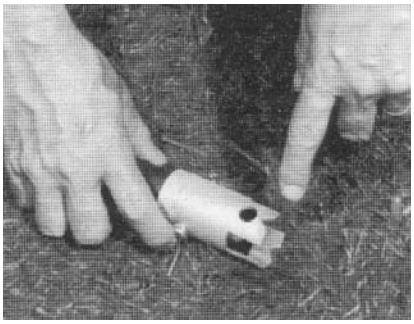

4. Assemble new Safety Stem Coupling to Upper Stem with new stainless steel Clevis Pin and new stainless steel Cotter Pin. Safety Stem Coupling should be installed with notches towards the Lower Stem.

NOTE: "THIS END UP" STAMPED ON COUPLING.

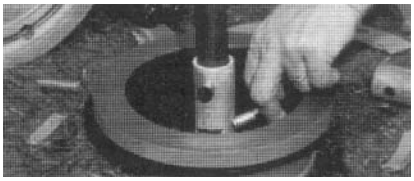

5. Assemble Upper Stem and new Safety Stem Coupling onto Lower Stem and retain it with the new stainless steel Clevis Pin and new stainless steel Cotter Pin furnished with Safety Stem Coupling.

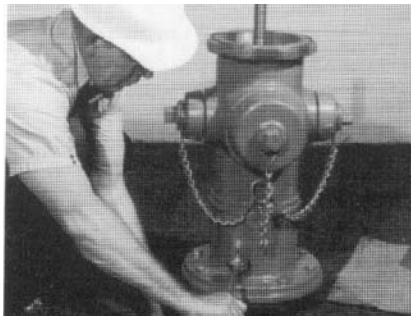

6. Install O-ring** in groove in Ground Line Flange of Upper Barrel and place Upper Barrel carefully in position on Lower Barrel. Be sure that Upper Barrel is concentric with Lower Barrel. Bolt the two halves of Safety Flange into place (with bevel on outer edge downward) and with Safety Flange snugly fitting around Lower Barrel.

7. Check Bonnet O-ring** for proper position and condition. Attach Brass Sleeve to Upper Stem and lubricate outside to protect O-ring Seals from thread damage. Place Bonnet onto Upper Barrel and assemble Bonnet Bolts only hand-tight. Remove Brass Sleeve. Reassemble Operating Nut, Anti-Friction Washer, and Hold Down Nut*. Be sure O-ring Seals are in good condition at thread shoulder on outside of Hold Down Nut and on in side where contact is made with Operating Nut. Remove Oil Filler Plug in side of Bonnet. Pour MUELLER Hydrant Lubricant into Oil Reservoir until it is level with the Oil Filler Hole. Replace Oil Filler Plug.

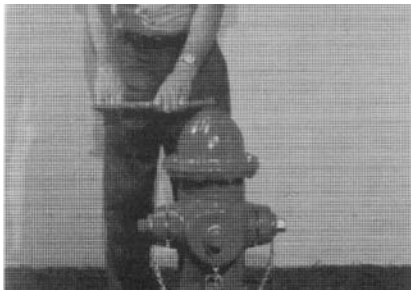

8. Tighten Bonnet Bolts. Unscrew one Hose Nozzle Cap slightly to bleed air. Open Hydrant fully. Tighten the Hose Nozzle Cap when water starts flowing and check all flange connections for leaks. Turn Operating Nut to fully closed position and remove Hose Nozzle Cap to allow Barrel to drain. Replace Hose Nozzle Cap.

9. Turn Operating Nut in closing direction to make sure Main Valve is closed tightly, then turn in opening direction approximately 1/4 turn to relieve tension on operating mechanism.

*TIGHTEN HOLD DOWN NUT TO 200-300 FT-LBS OF TORQUE. IF TORQUE WRENCH IS NOT AVAILABLE, USE A 3 LB HAMMER TO STRIKE THE END OF THE A-311 WRENCH FIRMLY TWO TIMES TO ASSURE THE NUT IS PROPERLY TIGHTENED.

**TO DETERMINE CORRECT O-RINGS FOR BONNET AND GROUND LINE FLANGES, WHICH ARE SIMILAR IN APPEARANCE: SMALLER DIAMETER O-RING IS USED AT BONNET FLANGE; LARGER AT GROUND LINE FLANGE.

MUELLER® SUPER CENTURION® FIRE HYDRANT

Removing Main Valve From Bonnet Flange

! WARNING

Before removing any bolt(s) holding the hydrant together, shut off gate valve to isolate hydrant from main water source. Loosen (do not remove) one nozzle cap two turns and check for water under pressure inside hydrant – bleed off any pressure, then remove nozzle cap completely. Open hydrant main valve completely. A continuous flow of water, no matter how slight, indicates hydrant is not properly isolated from the main water supply, and that problem must be corrected before any hydrant disassembly can proceed. Disassembly of hydrant with pressurized water acting against the main valve could result in unexpected ejection of hydrant parts, debris or high-pressure water stream, which could cause serious bodily injury.

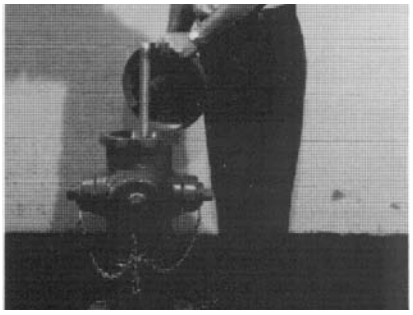

1. Remove Hold Down Nut, Operating Nut, and Anti-Friction Washer from Bonnet. Lubricate Brass Sleeve and slide over threaded stem to prevent O-ring damage. Unbolt and remove Bonnet. Remove Brass Sleeve.

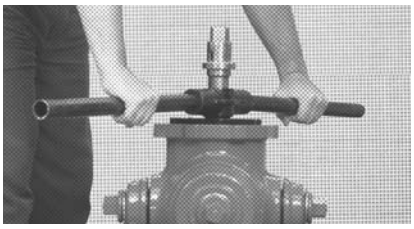

2. Slide slotted end of Wrench over top of Stem and engage the slot with Pin in Upper Stem. Thread Operating Nut onto stem and tighten against wrench to hold it securely. Lower support arm onto top flange of the Upper Barrel and tighten Thumb Screw to hold the Main Valve in the closed position. Shut off water at the Gate Valve. Remove Main Valve Assembly by turning Seat Wrench counter-clockwise.

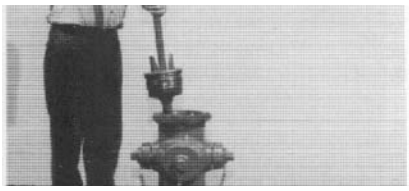

3. Lift out Wrench, Lower Stem, Main Valve Assembly and Seat Ring from Hydrant Barrel as a unit.

CAUTION: ALWAYS FILL THE OIL RESERVOIR WITH THE BONNET INSTALLED, THE HYDRANT IN ITS NORMAL UPRIGHT POSITION, AND THE MAIN VALVE FULLY CLOSED. IF THE HYDRANT IS FILLED WITH LUBRICANT UNDER ANY OTHER CIRCUMSTANCES, EXCESS LUBRICANT CAN OVERFILL THE BONNET AND CREATE A PRESSURE LOCK. THIS COULD RESULT IN DAMAGE TO THE SEALS OR BONNET, OR PREVENT PROPER HYDRANT OPERATION.

4. Straighten stainless steel Lock Washer, unscrew Cap Nut and remove Washer, Stem Seal, Lower Valve Plate, Main Valve and Seat Ring. Clean, inspect and replace any damaged parts. (Main Valve can be reversed to provide new seal.) Replace Drain Ring Facings. Inspect and lubricate Top and Bottom Seat Ring O-rings (replace if necessary). Lubricate all threaded surfaces and reassemble.

5. With Cap Nut tightened to 100 ft-lbs on 5 1/4" Hydrant or 75 ft-lbs on 4 1/2" Hydrant, bend edges of stainless steel Lock Washer over one flat on the Lower Valve Plate and one flat on the Cap Nut.

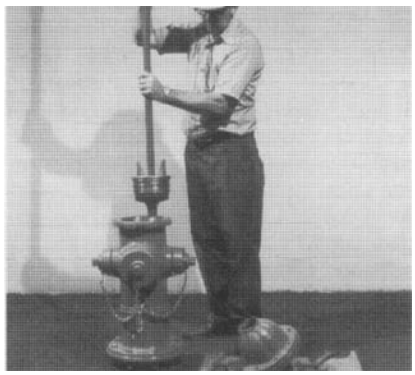

6. Lower Main Valve, turn Seat Wrench clockwise, and carefully thread Main Valve and Seat Ring into the base of the Hydrant hand-tight. Raise the Main Valve leaving about 1/2" of play between the Main Valve and Seat. Lower Support Arm and tighten Thumb Screw.

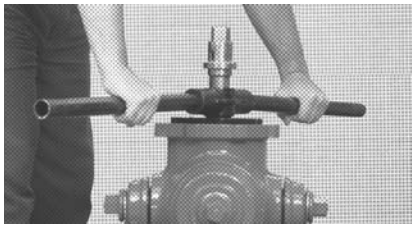

7. Turn Seat Wrench clockwise to tighten Main Valve to 350 ft-lbs. Turn on water at the Gate Valve and remove Seat Wrench by removing operating nut.

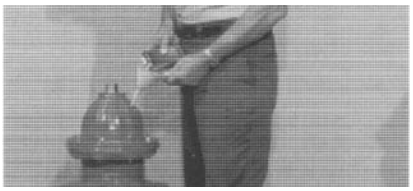

8. Check Bonnet O-ring for proper position and condition. Attach Brass Sleeve to Upper Stem and lubricate outside to protect O-ring Seals from thread damage. Place Bonnet onto Upper Barrel and assemble Bonnet Bolts only hand-tight. Remove Brass Sleeve. Reassemble Operating Nut, Anti-Friction Washer, and Hold Down Nut*. Be sure O-ring Seals are in good condition at thread shoulder on outside of Hold Down Nut and on inside where contact is made with Operating Nut. Remove Oil Filler Plug in side of Bonnet. Pour MUELLER Hydrant Lubricant into Oil Reservoir until it is level with the Oil Filler Hole. Replace Oil Filler Plug.

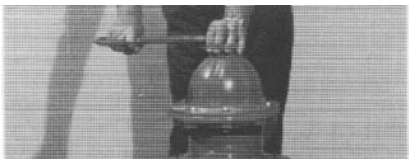

9. Tighten Bonnet Bolts. Unscrew one Hose Nozzle Cap slightly to bleed air. Open hydrant fully. Tighten the Hose Nozzle Cap when water starts flowing and check all flange connections for leaks. Turn Operating Nut to fully closed position and remove Hose Nozzle Cap to allow Barrel to drain. Replace Nozzle Cap.

10. Turn Operating Nut in closing direction to make sure Main Valve is closed tightly, then turn in opening direction approximately 1/4 turn to relieve tension on operating mechanism.

*TIGHTEN HOLD DOWN NUT TO 200-300 FT-LBS OF TORQUE. IF TORQUE WRENCH IS NOT AVAILABLE, USE A 3 LB HAMMER TO STRIKE THE END OF THE A-311 WRENCH FIRMLY TWO TIMES TO ASSURE THE NUT IS PROPERLY TIGHTENED.

MUELLER® SUPER CENTURION® FIRE HYDRANT

Remove Main Valve from Lower Barrel Flange

! WARNING

Before removing any bolt(s) holding the hydrant together, shut off gate valve to isolate hydrant from main water source. Loosen (do not remove) one nozzle cap two turns and check for water under pressure inside hydrant – bleed off any pressure, then remove nozzle cap completely. Open hydrant main valve completely. A continuous flow of water, no matter how slight, indicates hydrant is not properly isolated from the main water supply, and that problem must be corrected before any hydrant disassembly can proceed. Disassembly of hydrant with pressurized water acting against the main valve could result in unexpected ejection of hydrant parts, debris or high-pressure water stream, which could cause serious bodily injury.

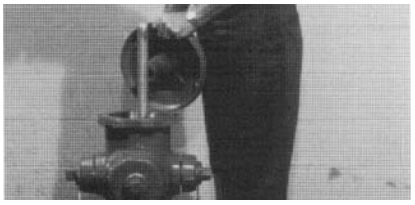

1. Remove Hold Down Nut, Anti-Friction Washer, and Operating Nut from Bonnet. Lubricate Brass Sleeve and slide over threaded stem end to prevent O-ring damage. Unbolt and remove Bonnet. Remove Safety Flange Bolts and Safety Flange. Remove Upper Barrel. Remove Upper Stem and Stem Coupling from Lower Stem. Slide slotted end of Wrench over Lower Stem. Align holes in Wrench and Stem and attach Wrench to Stem with Clevis Pin. Lower Support Arm onto the Flange of Lower Barrel and tighten Thumb Screw (to hold Main Valve in closed position). Shut off water at Gate Valve.

2. Remove Main Valve Assembly by turning Wrench counter-clockwise and lift out Wrench, Lower Stem, Main Valve Assembly and Seat Ring from Hydrant Barrel as a unit.

3. Straighten stainless steel Lock Washer, unscrew Cap Nut and remove Washer, Stem Seal, Lower Valve Plate, Main Valve and Seat Ring. Clean, inspect and replace any damaged parts. (Main Valve can be reversed to provide new seal.) Replace Drain Valve Facings. Inspect and lubricate Top and Bottom Seat Ring O-rings (replace if necessary). Lubricate all threaded surfaces and reassemble. With Cap Nut tightened to 100 ft-lbs on 5 1/4" Hydrant, or 75 ft-lbs on 4 1/2" Hydrant, bend edges on stainless steel Lock Washer over one flat on the Lower Valve Plate and one flat on the Cap Nut.

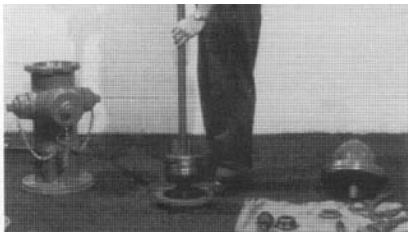

4. Lower Main Valve Assembly and carefully thread Seat Ring into the base of the Hydrant hand-tight. Raise the Main Valve leaving about 1/2" of play between the Main Valve and Seat. Lower Support Arm onto Flange of Lower Barrel and tighten Thumb Screw.

5. Tighten Main Valve to 350 ft-lbs. Turn on water at the Gate Valve and remove Wrench from Stem by removing Clevis Pin.

6. Reassemble Upper Stem to Lower Stem. Place Upper Barrel in place and reassemble Safety Flange.**

CAUTION: Always fill the oil reservoir with the bonnet installed, the hydrant in its normal upright position, and the main valve fully closed. If the hydrant is filled with lubricant under any other circumstances, excess lubricant can overfill the bonnet and create a pressure lock. This could result in damage to the seals or bonnet, or prevent proper hydrant operation.

7. Check Bonnet O-ring** for proper position and condition. Attach the Brass Sleeve to Upper Stem and lubricate outside to protect O-ring Seals from thread damage. Place Bonnet onto Upper Barrel and assemble Bonnet Bolts only hand-tight. Remove Brass Sleeve. Reassemble Operating Nut, Anti-Friction Washer, and Hold Down Nut*. Be sure O-ring Seals are in good condition at thread shoulder on outside of Hold Down Nut and on inside where contact is made with Operating Nut. Remove Oil Filler Plug in side of Bonnet. Pour MUELLER Hydrant Lubricant into Oil Reservoir until it is level with Oil Filler Plug Hole. Replace Oil Filler Plug.

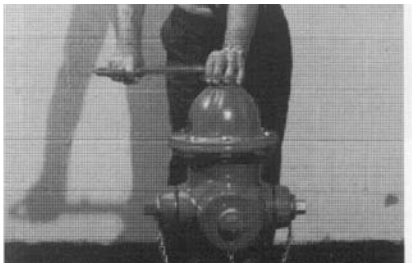

8. Tighten Bonnet Bolts. Unscrew one Hose Nozzle Cap slightly to bleed air. Open Hydrant fully. Tighten the Hose Nozzle Cap when water starts flowing and check all flange connections for leaks. Turn Operating Nut to fully closed position and remove Hose Nozzle Cap to allow Barrel to drain. Replace Nozzle Cap.

9. Turn Operating Nut in closing direction to make sure Main Valve is closed tightly, then turn in opening direction approximately 1/4 turn to relieve tension on operating mechanism.

*TIGHTEN HOLD DOWN NUT TO 200-300 FT-LBS OF TORQUE. IF TORQUE WRENCH IS NOT AVAILABLE, USE A 3 LB HAMMER TO STRIKE THE END OF THE A-311 WRENCH FIRMLY TWO TIMES TO ASSURE THE NUT IS PROPERLY TIGHTENED.

**TO DETERMINE CORRECT O-RINGS FOR BONNET AND GROUND LINE FLANGES, WHICH ARE SIMILAR IN APPEARANCE: SMALLER DIAMETER O-RING IS USED AT BONNET FLANGE; LARGER AT GROUND LINE FLANGE.

MUELLER® SUPER CENTURION® FIRE HYDRANT

To Replace Nozzles

1. Remove Nozzle Cap.

2. Remove stainless steel Nozzle Lock by driving it out with a pointed tool and hammer.

3. Place Nozzle Wrench, A-316, on Nozzle with Wrench Forks facing toward Hydrant Barrel and locked onto Nozzle Drive Lugs. Replace Nozzle Cap and tighten until Cap rests loosely against backside of Wrench.

4. Remove Nozzle. The Nozzle Wrench may be struck with a heavy brass hammer or additional leverage may be obtained by placing a length of 2" schedule 40 steel pipe over the handle of the Nozzle Wrench.

5. Thread new Nozzle into Upper Barrel, attach A-316 Nozzle Wrench as described in Step 3, and tighten Nozzle to approximately 600 ft-lbs torque (100 lbs. pull on a 6' lever).

6. Remove Nozzle Cap and A-316 Nozzle Wrench. Place the Nozzle Lock (Part 143137), lengthwise in the slot formed by either of the Nozzle Drive Lugs and the Barrel Bore. Drive the Nozzle Lock in place by striking the Nozzle Lock Installation Tool (Part 143132) several times with a heavy brass hammer.

NOTE: Wear safety glasses when using a striking tool. The Nozzle Lock does not have to be completely seated into the slot, but it should be well engaged along the entire length of the Nozzle Drive Lug and Barrel Bore.

7. Replace and tighten Nozzle Cap.

MUELLER® SUPER CENTURION® FIRE HYDRANT

Changing Shoe

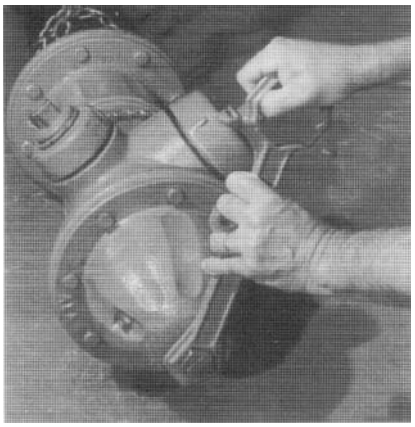

1. Tighten Operating Nut to be sure Main Valve is in the fully closed position.

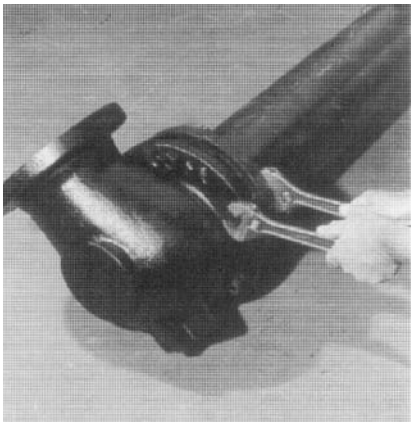

2. Remove all 6 Shoe Bolt Nuts.

3. Slip off Hydrant Shoe.

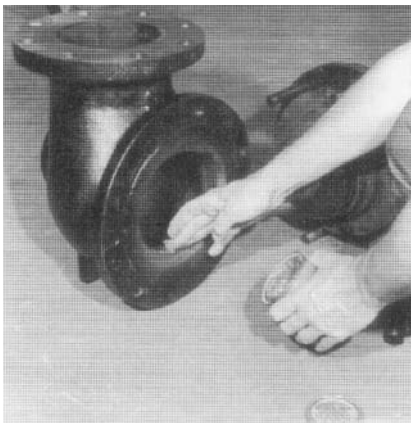

4. Lubricate new Shoe and Bottom Seat Ring O-ring.

5. Position Shoe to slip in place.

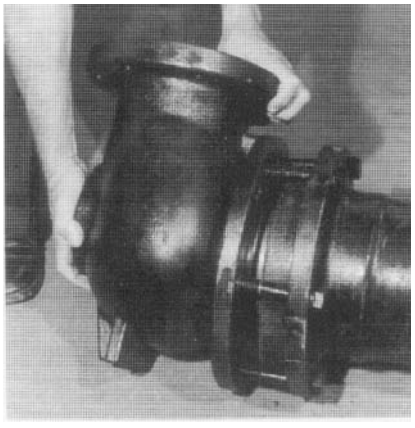

6. Slip new Shoe in place being careful not to damage Bottom Seat Ring O-ring.

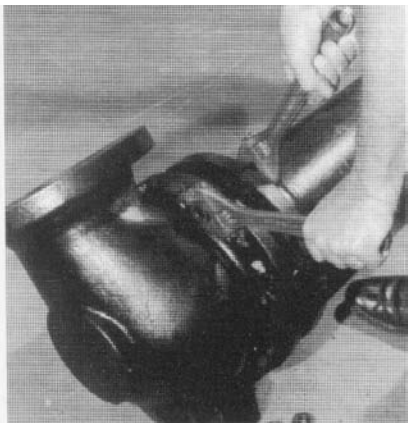

7. Replace Shoe Bolt Nuts. Tighten to approximately 1800 in-lbs.

MUELLER® SUPER CENTURION® FIRE HYDRANT

Inserting Extension Section

! WARNING

Before removing any bolt(s) holding the hydrant together, shut off gate valve to isolate hydrant from main water source. Loosen (do not remove) one nozzle cap two turns and check for water under pressure inside hydrant – bleed off any pressure, then remove nozzle cap completely. Open hydrant main valve completely. A continuous flow of water, no matter how slight, indicates hydrant is not properly isolated from the main water supply, and that problem must be corrected before any hydrant disassembly can proceed. Disassembly of hydrant with pressurized water acting against the main valve could result in unexpected ejection of hydrant parts, debris or high-pressure water stream, which could cause serious bodily injury.

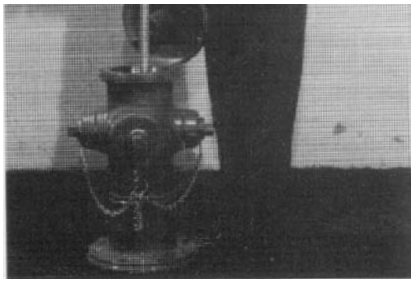

1. Remove Hold Down Nut, Anti-Friction Washer and Operating Nut from Bonnet. Lubricate outside of Brass Sleeve and slide over threaded stem end to prevent O-ring damage. Unbolt Bonnet from Upper Barrel and remove. Remove Brass Sleeve.

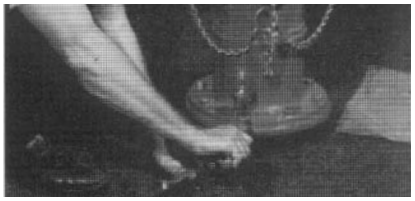

2. Unbolt Safety Flange. Remove Upper Barrel. Remove Upper Stem and Safety Stem Coupling by removing the lower stainless steel Cotter Pin and stainless steel Clevis Pin.

3. Place Extension Stem and Extension Coupling on Lower Stem and retain it with stainless steel Clevis Pin and stainless steel Cotter Pin.

CAUTION: Always fill the oil reservoir with the bonnet installed, the hydrant in its normal upright position, and the main valve fully closed. If the hydrant is filled with lubricant under any other circumstances, excess lubricant can overfill the bonnet and create a pressure lock. This could result in damage to the seals or bonnet, or prevent proper hydrant operation.

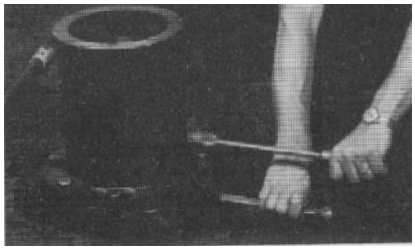

4. Attach Extension Barrel to Lower Barrel with solid Flange halves (without groove) and Bolts, being sure Flange Gasket is in place.

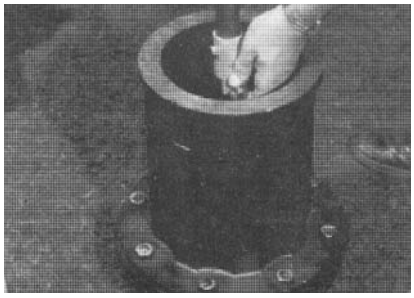

5. Assemble Upper Stem and Safety Stem Coupling on to Extension Stem and retain it with stainless steel Clevis Pin and stainless steel Cotter Pin. MAKE SURE SAFETY STEM COUPLING IS INSTALLED WITH NOTCHES TOWARDS THE LOWER STEM. WORDS "THIS END UP" TOWARDS THE UPPER STEM.

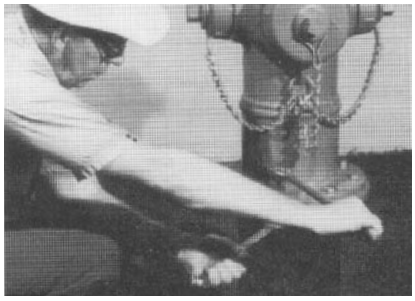

6. Attach Upper Barrel with Safety Flange Halves (with bevel on outer edge downward) and Bolts; being sure Safety Flange O-ring** is in groove in Upper Barrel.

*TIGHTEN HOLD DOWN NUT TO 200-300 FT-LBS OF TORQUE. IF TORQUE WRENCH IS NOT AVAILABLE, USE A 3 LB HAMMER TO STRIKE THE END OF THE A-311 WRENCH FIRMLY TWO TIMES TO ASSURE THE NUT IS PROPERLY TIGHTENED.

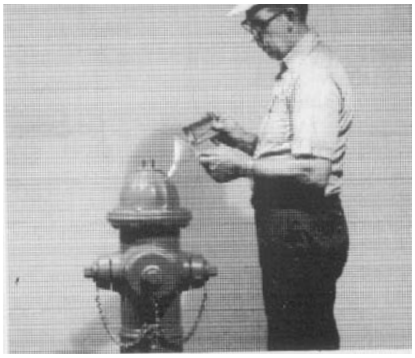

7. Check Bonnet O-ring** for proper position and condition. Attach Brass Sleeve to Upper Stem and lubricate outside to protect O-ring Seals from thread damage. Place Bonnet onto Upper Barrel and assemble Bonnet Bolts only hand-tight. Remove Brass Sleeve. Reassemble Operating Nut, Anti-Friction Washer, and Hold Down Nut*. Be sure O-ring Seals are in good condition at thread shoulder on outside of Hold Down Nut and on inside where contact is made with Operating Nut. Remove Oil Filler Plug in side of Bonnet. Pour MUELLER Hydrant Lubricant into Oil Reservoir until it is level with Oil Filler Plug Hole. Replace Oil Filler Plug.

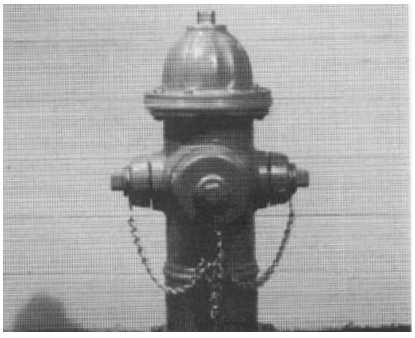

8. Tighten Bonnet Bolts. Unscrew one Hose Nozzle Cap slightly to bleed air. Open Hydrant fully. Tighten Hose Nozzle Cap when water starts flowing and check all flange connections for leaks. Turn Operating Nut to fully closed position and remove Hose Nozzle Cap to allow Barrel to drain. Replace Hose Nozzle Cap.

9. Turn Operating Nut in closing direction to make sure Main Valve is closed tightly, then turn in opening direction approximately 1/4 turn to relieve tension on operating mechanism.

**TO DETERMINE CORRECT O-RINGS FOR BONNET AND GROUND LINE FLANGES, WHICH ARE SIMILAR IN APPEARANCE: SMALLER DIAMETER O-RING IS USED AT BONNET FLANGE; LARGER AT GROUND LINE FLANGE.

Mueller Co.

COUNTRY LANE 2.0 MG
ELEVATED STORAGE TANK

CITY OF ROCKWALL, TEXAS

SPECIFICATION SECTION: TS1

OPERATIONS & MAINTENANCE MANUAL

OVERHEAD DOOR

TABLE OF CONTENTS:

1. **OVERHEAD DOOR**
2. **ELECTRIC MOTOR OPERATOR**

SUPPLIER / SUBCONTRACTOR

OVERHEAD DOOR CO. OF SHERMAN-DENISON
CONTACT: STAN HAYES
316 W. CHESTNUT STREET
DENISON, TEXAS 75020
(903) 463-2083

GENERAL CONTRACTOR

LANDMARK STRUCTURES I, LP
1665 HARMON ROAD
FORT WORTH, TEXAS 76177
(817) 439-8888

OVERHEAD DOOR

TABLE OF CONTENTS

A. INSTALLATION INSTRUCTIONS

B. PREVENTIVE MAINTENANCE

C. TROUBLESHOOTING GUIDE

D. WARRANTY

INSTALLATION INSTRUCTIONS

OVERHEAD DOOR®

the original since 1921

Installation Instructions for ROLLING SERVICE DOOR Series 610/620/625

Series 620

14' X 14'

RG+ Electric Motor Operator

Structural Steel Angle Guides

F-265 Flat Slats

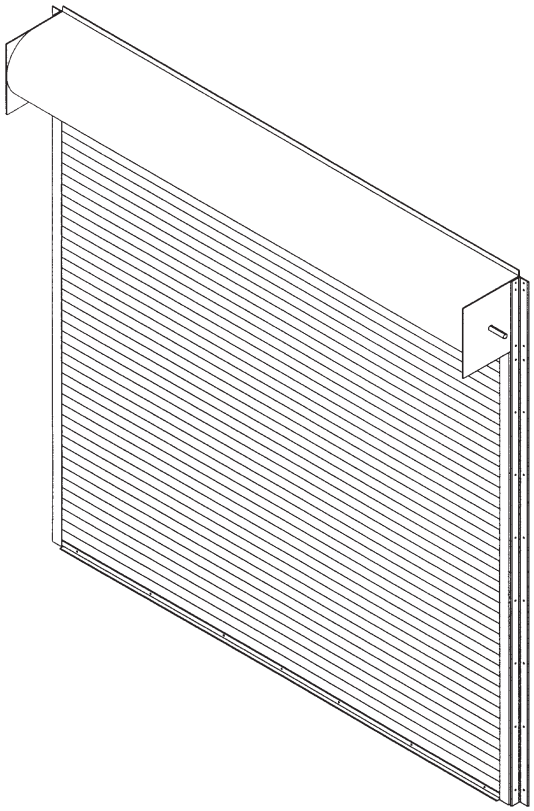

READ COMPLETE INSTRUCTIONS BEFORE INSTALLING DOORS

300922-0005
8 March 2004

© Overhead Door Corporation

Dallas, TX

OVERVIEW OF POTENTIAL HAZARDS

Overhead doors are large, heavy objects that move with the help of springs under high tension and electric motors. Since moving objects, springs under tension, and electric motors can cause injuries, your safety and the safety of others depend on you reading the information in this manual. If you have questions or do not understand the information presented, call your nearest service representative**.**

In this section, and those that follow, the words **Danger**, **Warning**, and **Caution** are used to emphasize important safety information. The word:

DANGER indicates an imminently hazardous situation which, if not avoided, will result in death or serious injury.
WARNING indicates a potentially hazardous situation which, if not avoided, could result in death or serious injury.
CAUTION indicates a potentially hazardous situation which, if not avoided, may result in minor or moderate injury.

The word **NOTE** is used to indicate important steps to be followed or important considerations.

POTENTIAL HAZARD	EFFECT	PREVENTION
MOVING DOOR	**WARNING:** Could result in death or serious injury.	Keep people clear of opening while Door is moving. **Do Not** allow children to play with the Door Operator. **Do Not** operate a Door that jams or one that has a broken spring.
ELECTRICAL SHOCK	**WARNING:** Could result in death or serious injury.	Turn off power before removing operator cover. When replacing cover, make sure wires are not pinching or near moving parts. Operator must be properly grounded.
HIGH SPRING TENSION	**WARNING:** Could result in death or serious injury.	**Do Not** try to remove, repair or adjust springs or anything to which Door spring parts are fastened, such as wood blocks, steel brackets, cables or other like items. Repairs and adjustments must be made by a trained door system technician using proper tools and instructions.

© Overhead Door Corporation

A sample of the “INSTALLATION DATA” sheet is shown below. Locate the work order “INSTALLATION DATA” sheet inside the door hardware box. You will need to refer to the data on the “INSTALLATION DATA” sheet.

Factory order number on door components must match with factory order number on the “INSTALLATION DATA” sheet. Each door has individual “INSTALLATION DATA” sheet.

```
                                                                    Page          Date
                                  **       W O R K   O R D E R       **
W.O./Parent.                 WO   ****************************************     Plant. . .          17
                             Related SO .
Item Number.                 HARDWARE                          Qty. .          Lot #. . .
Customer . .                                                   Job. .          Start Dt .        Req D.
Status . . .    FAX:                                 Pty.      Type .          Drawing #. CONFIGURED
                                                                               P.O. # . .

  WALL OPENING    :          WIDE X              HIGH  PRDCT:      SLAT TYPE :        GAUGE :        WINDLOAD : 20
  GUIDE TYPE      :          GUIDE ENTRY TYPE :                                  DRIVE SIDE :       DRIVE NO. :
  BOTTOM BAR TYPE:                 BBAR MATL.:                    BBAR FINISH :
  DOOR MOUNT      :                WALL MOUNT :                   OPERATION :                    BBAR WEATHERSTRIP :
  *** DOOR SERIES :     ***                                                                       ABBV/COLOR   :
  ************************************************** HARDWARE DETAIL **************************************************

                                                 DOOR INSTALLATION DATA:
 |--------------------|
 | DOOR SERIES :      |
 |--------------------|-----------------------|--------------|---------------|--------------|-------------------------------|
 | WALL OPENING WIDTH | WALL OPENING HEIGHT   | GUIDE TYPE   | S REFERENCE   | HAND DRIVE   | OPERATION TYPE                |
 |--------------------|-----------------------|--------------|---------------|--------------|-------------------------------|
 | INITIAL | TOTAL    | RELEASE | DRIVE NO.        | CURTAIN/BOTTOM BAR WT. | COUNTERBALANCE WEIGHT |
 | TURNS   | TURNS    | TURN    |                  |                        |                       |
 |---------|----------|---------|------------------|------------------------|-----------------------|
 | GUIDE   | GUIDE    | MOUNTING|
 | GAP     | CONFIG   |         |
 |---------|----------|---------|

                  . . . . . .   Messages   . . . . . .
```

SAMPLE

VERIFY THAT THE DOOR INSTALLATION can be accomplished before proceeding:

- Locate the work order “INSTALLATION DATA” sheet inside the door hardware box.
- Does the wall opening match the Opening Width and Height shown on the “Installation Data” sheet and Figure 1?
- Are the guides you received suitable for the jambs? Compare the guides type shown on the “Installation Data” sheet with Figure 2.
- Can the guides be installed plumb?
- Check the sill for level. If sill is not level, mark the high sill location on the low side jamb.

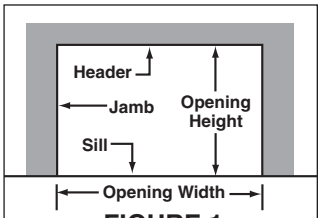

FIGURE 1

FIGURE 2

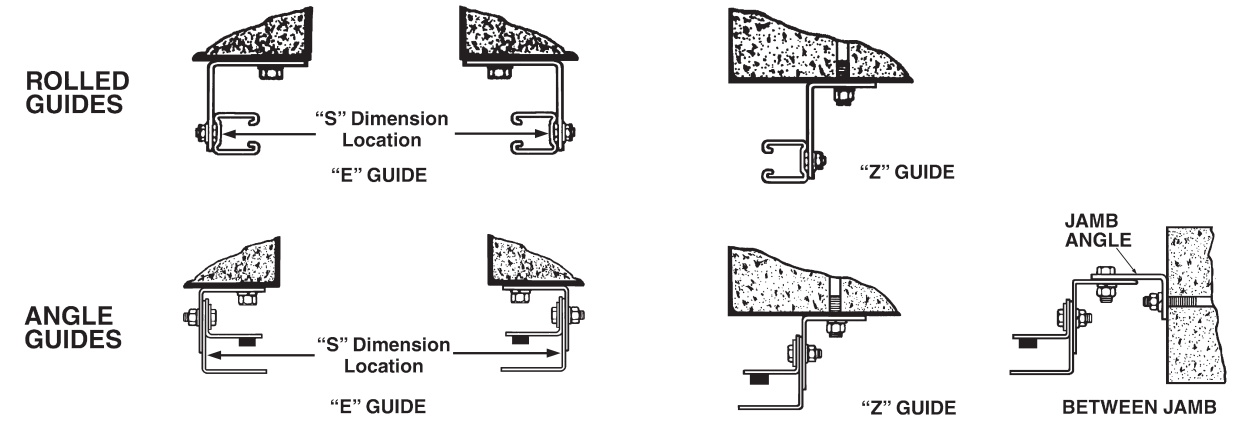

© Overhead Door Corporation

STEP 1 If you plan to use the sling method to wrap the curtain on the barrel assembly, and if the outside guide angle or both guide angles are flared, then remove the guide angles from the wall angle at this time. They will be bolted to the wall angle after curtain installation is complete in Step 10; the Guide Gap must be set to the dimension shown on the "Installation Data" sheet. See Figure 5.

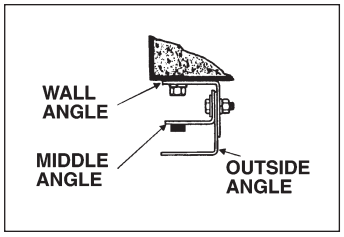

STEP 2 INSTALL GUIDE ASSEMBLIES

- Locate the guide assemblies such that "S" dimension exists between the guides as shown in Figure 2 on Page 3.
- The "S" dimension is shown on the "Installation Data" sheet.
- Both guides MUST be on a level line and both guides MUST be plumb.
- The "S" dimension must be held within 1/8" over the entire height of guides.

MASONRY JAMBS

Hold "Z" guide, or wall angle, or jamb angle against wall and drill mounting holes through the slots using drill size shown below. Install jamb fasteners on one guide. Recheck "S" distance, and continue with installation.

STEEL JAMBS–Screw Attachment Option

Hold "E" guide wall angle against steel jamb and mark the spot to be drilled, or hold wall angle or jamb angle against steel jamb and drill holes through the slots using drill size shown below. Install all jamb fasteners on one guide. Recheck "S" distance, and continue with installation.

STEEL JAMBS–Weld Attachment Option

Hold "E" guide wall angle against steel jamb and tack weld wall angle (jamb angle) in place. Recheck "S" distance before proceeding. Apply vertical welds as shown in Figure 3 using welding electrodes E6010, E6011 or E7014. Weld the wall angle to the steel jamb along the top of the angle. Figure 3 is shown without the middle and outside angles attached to the wall angle.

NOTE: When steel jamb does not extend above the opening, use three thru-bolts to fasten each wall angle above the opening. See Figure 4.

JAMB	FASTENER	DRILL SIZE	JAMB FASTENER SPECIFICATIONS
Steel	3/8" Self-Tap Screw 1/2" Bolt 5/8" Bolt	11/32" Dia. 27/64" Dia. 17/32" Dia.	Steel jambs must be 3/16" thick
Concrete	3/8" Expansion Bolt 1/2" Expansion Bolt 5/8" Expansion Bolt	3/8" Dia. 1/2" Dia. 5/8" Dia.	Drill holes at least 4 inches from jamb corner per Overhead Door instruction 307390-0001
Filled Block	3/8" Expansion Bolt 1/2" Expansion Bolt	3/8" Dia. 1/2" Dia.	
Wood	3/8" Lag Screw	1/4" Dia.	Drill hole 3" deep
Unfilled Block	3/8" Thru Bolt 1/2" Thru Bolt 5/8" Thru Bolt	7/16" Dia. 9/16" Dia. 11/16" Dia.	Install 3" O.D. steel washer on opposite side of wall

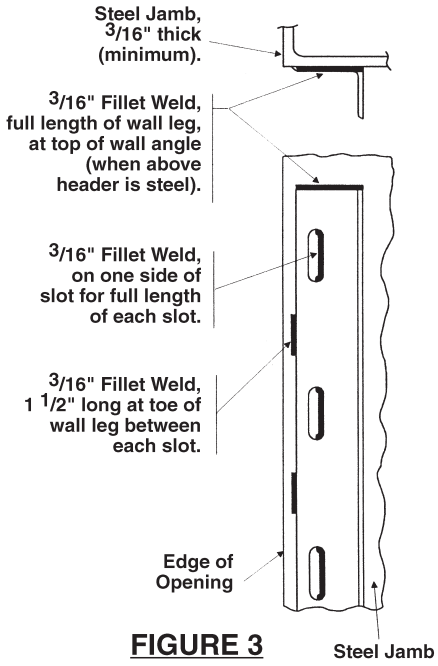

FIGURE 3

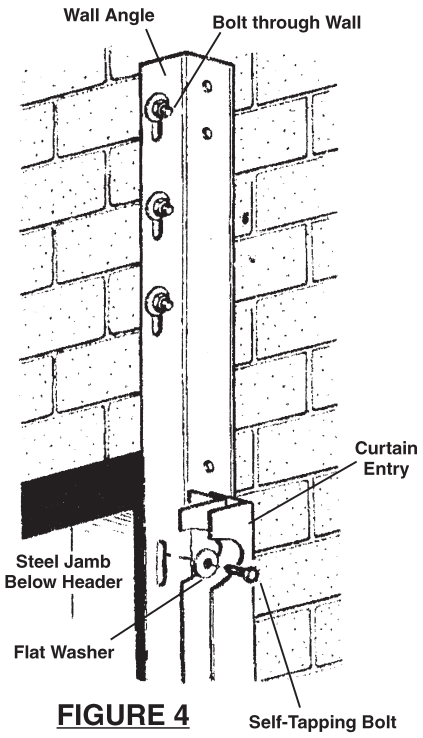

FIGURE 4

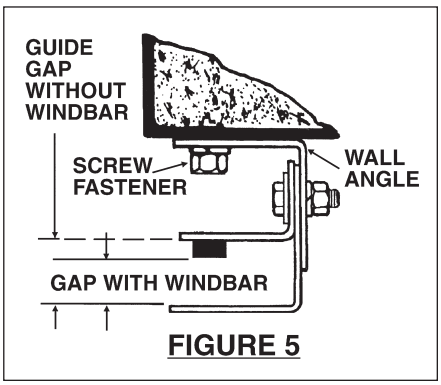

FIGURE 5

© Overhead Door Corporation

STEP 3 IDENTIFY HEADPLATE BRACKETS
Right Hand Drive shown; Left Hand Drive is opposite.
See Figure 6.

STEP 4 IDENTIFY BARREL ASSEMBLY DRIVE END
Right hand drive shown in Figure 7; left hand drive is opposite. Look for an "R" for right hand drive or an "L" for left hand drive stamped on the end of the drive shaft.
SPRING CONFIGURATION—See Figure 7a.

- Left hand drive configuration has end of spring pinned to barrel near tension end.
- Right hand drive counterbalance has end of spring pinned to barrel several feet from tension end.
- At tension end of barrel the bearing assembly may be pinned to the barrel as shown in Figure 7a, or the bearing assembly may be welded into end of barrel.

STEP 5 Find Drive Headplate Assembly Instructions in door hardware box. Install gear hoist assembly mounting bolts in headplate AT THIS TIME; see instruction 308042. For chain and sprocket drive operation, see instruction 300951.

WARNING

Counterbalance damage could allow curtain to close rapidly which could result in death or serious injury. A right hand drive headplate must be used with right hand barrel assembly to prevent damage; left hand drive headplate and left hand barrel must also match.

STEP 6 BARREL AND HEADPLATE BRACKETS

- Slide drive end of barrel assembly through drive bracket bearing and tension end through tension bracket.
- Install set collars on shafts on outside of headplate brackets.
- When a hole is in the tension shaft, no set collar is used on tension shaft because the tension wheel must rest against tension headplate bracket.
- Secure tension wheel to tension shaft using a key or a pin as shown in Figure 8. The pin must fully engage the tension wheel which is against the tension headplate bracket.
- The distance between the headplate brackets should be the "S" dimension on the "Installation Data" sheet.

CAUTION: Use proper lifting equipment and correct lifting procedure to avoid injury.

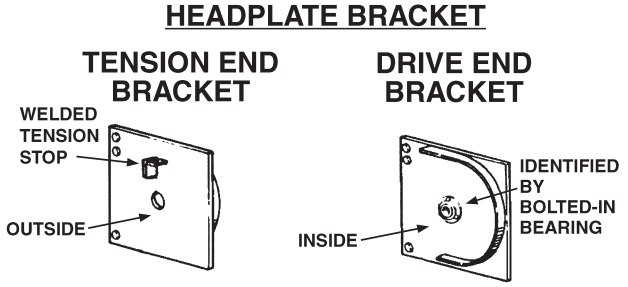

FIGURE 6

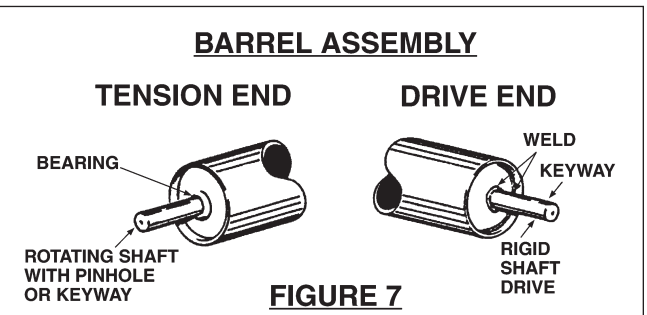

FIGURE 7

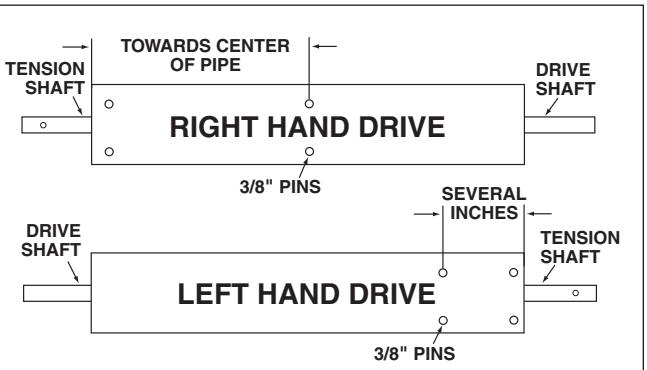

FIGURE 7a

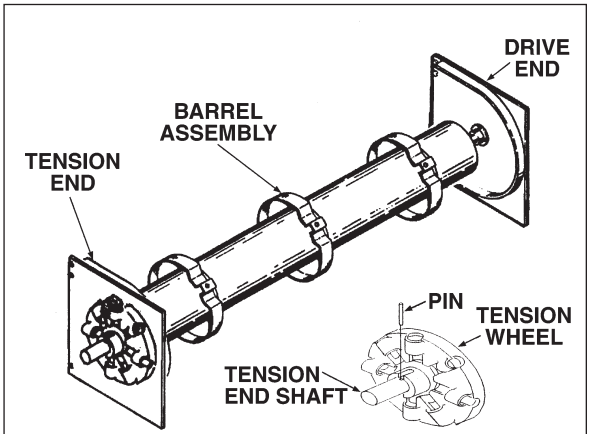

FIGURE 8

STEP 7 LIFT HEADPLATE BRACKETS AND BARREL AND BOLT THEM TO GUIDE WALL ANGLES

- Use hex bolts to fasten headplate brackets to the inside of the guide wall angle.
- Bolt heads must be on the inside of the headplate brackets. See Figure 9.
- Headplate brackets must be square to the wall and parallel.
- Use a level to make sure the barrel is level.
- Center barrel between brackets and secure with set collars on outside of brackets to prevent barrel from moving sideways.
- Two set collars are required for drive headplate with cast flange bearing.
- Headplate brackets may have two or three mounting slots. Put flat steel washer under bolt head and under nut.

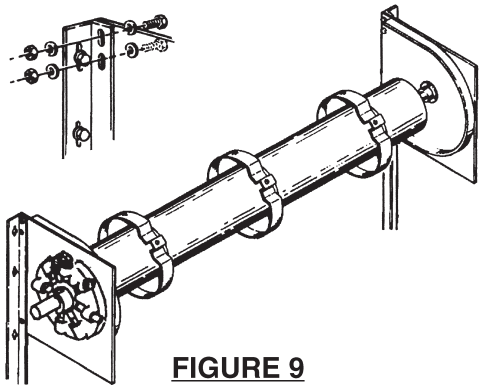

FIGURE 9

STEP 8 DRIVE HEADPLATE ASSEMBLY

- Complete the installation of the drive components. See Drive Headplate Assembly Instructions; for Chain and Sprocket operation see 300951, for Gear Drive operation see 308042.

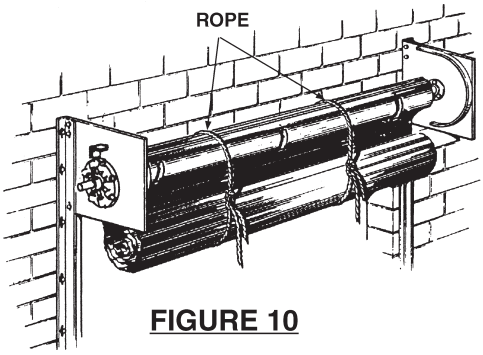

FIGURE 10

WARNING

The use of electric operator during installation of the door could result in death or serious injury. Do not connect power to electric operator until door installation is complete including hood and covers.

STEP 9 INSTALLATION OF CURTAIN: See Figure 10

- The Sling Method is recommended because rolling the curtain onto the barrel assembly on the floor can cause curtain damage.
- Sling Method requires flared guide angles to be removed at this time.
- Suspend the curtain below the barrel on two or more slings or ropes rated for the weight of the curtain shown on the “Installation Data” sheet.
- Fasten the top slat to sling/rope and rotate the barrel to bring the Top Slat into place.
- Center the curtain between the headplate brackets with pinned tension wheel against the headplate.
- If the barrel has rings, pull the curtain up and hold the top slat against the rings. Make holes in top slat align with the holes in the rings. Attach top slat to rings with 3/8" round head Torx screws and washers provided. DO NOT strip the screw threads.
- If the barrel has studs, the top slat will have slots to attach to barrel. Hook curtain over studs and fasten with 5/16" round head screws and washers and TWO clamp washers provided. See Figure 11.

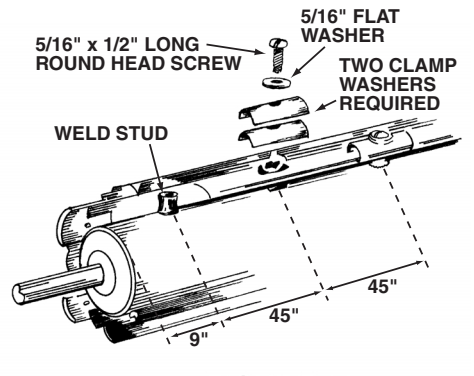

FIGURE 11

WARNING

Rapidly closing curtain could result in death or serious injury. Use slings/ropes and locking pliers on both guides to keep curtain in the open position until spring tension is applied to the barrel assembly.

STEP 10 COMPLETE CURTAIN INSTALLATION

- Coil curtain completely onto barrel.
- If guides are flared, then bolt the middle angles and the outside angles to the wall angles like Figure 5.

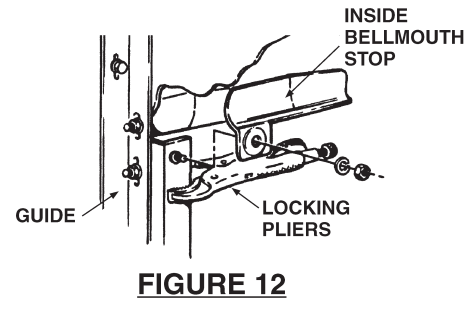

FIGURE 12

- The Guide Gap MUST be set to the value shown on the “Installation Data” sheet. Refer to Step 2 and Figure 5.
- Place locking pliers on LH & RH guides as shown at 2 to 3 inches below the top of the guides. See Figure 12.
- Create enough slack in the sling/rope so the curtain can be lowered into the guides and rest on the locking pliers.

WARNING

Tension wheel is under high spring tension and could spin rapidly which could result in death or serious injury. Door must be open when adjusting spring tension. Use two winding bars 1/2" diameter steel rod, 2 to 3 feet long.

STEP 11 LOCK THE DRIVE by one of the options below:
- Clamp locking pliers on the drive sprocket or gear with the end of the pliers against the wall or lintel.
- Secure the hand chain on the mounted chain keeper.
- Lock the crank handle.

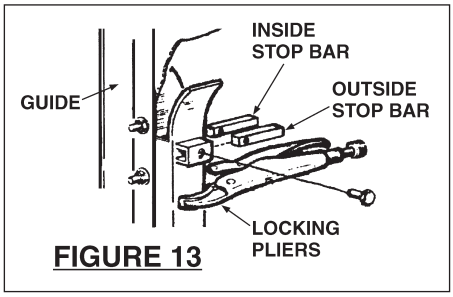

FIGURE 13

STEP 12 INSTALL CURTAIN STOPS
- If the guides are not flared, install curtain bellmouth stops on guides. A stud is attached to the guides to hold the bellmouth. Be certain the back of the bellmouth is flush against headplate. See Figure 12.
- If guides are flared, slide stop bar into channel holder welded to guide, and install 3/8" cap screw. See Figure 13.

STEP 13 APPLY INITIAL TENSION—Right hand drive shown, left hand opposite.
- Wind Tension Wheel in the direction shown in Figure 14. Apply the Initial Turns shown on the tension headplate decal and on the “Installation Data” sheet.
- After proper tension is applied, install the tension pin into tension wheel hole and allow wheel to rotate until the pin is against the tension stop. See Figure 14.
- If reduction tension headplate assembly is required the factory will provide an Installation Instruction sheet.

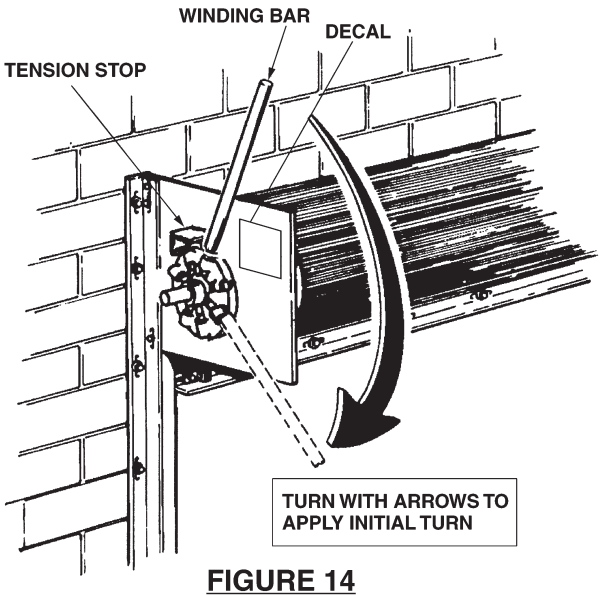

FIGURE 14

STEP 14
- Remove the drive shaft lock procedure installed in Step 11.
- Remove slings or ropes.
- Remove the locking pliers from the guides.
- Clear the area in path of closing door.

STEP 15
- Close and open the door five (5) times and evaluate the tension adjustment.
- A rolling door should snap into the head and barely tend to rise off the floor. It will also fall through the middle of its height.
- Large doors may require a 35 lbs. pull to raise with hand chain. A chain pull of up to 35 lbs. is permissible.

NOTE: Instruct customers to use both hands to control both hand chains during the closing operation.

STEP 16 ADJUST TENSION WITH DOOR IN FULLY OPEN POSITION
- Use two winding bars to adjust tension one notch at a time to increase or decrease torque as required.
- Use locking pliers on guides during adjustment process.

STEP 17 FINAL CHECK to be completed before installing the hood.
- Verify through entire travel of the door that the endlocks or windlocks on the end of the curtain are not rubbing the headplate brackets. Operate door several times to check for problems.
- Check that the bottom bar is level in full down and full up positions and that curtain is not binding against back of guide.
- If curtain is level at bottom and not level at top, put shims between curtain and barrel on the low side.
- The guides may be lubricated with a paste wax or silicone spray. DO NOT USE GREASE.
- Verify good mechanical connection and tightness of fasteners, e.g., guides headplates, set screws and roller chain link.

© Overhead Door Corporation

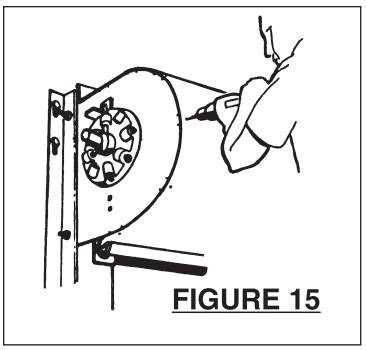

FIGURE 15

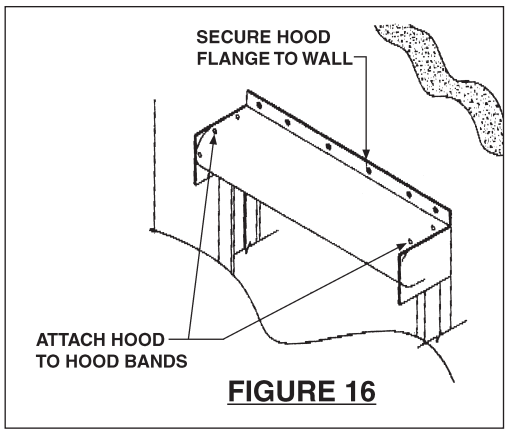

FIGURE 16

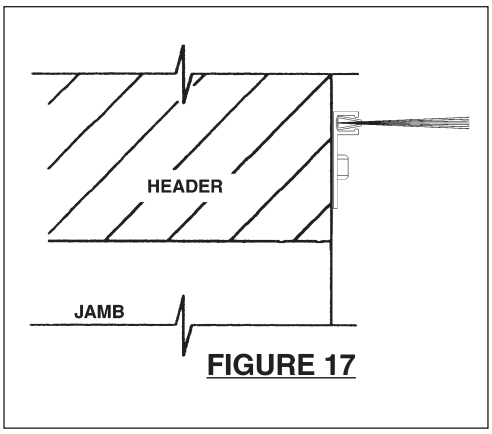

FIGURE 17

STEP 18 HOOD INSTALLATION

- If hood supports are provided, snap a line across top of headplate brackets on the wall. Measure length of hood sections and locate hood support so the hood splice will fall on center of support.
- Attach hood to hood bands on headplate brackets (and to supports if provided) by drilling a 7/32" hole through hood and band. Then secure with 1/4" dia. x 3/8" long self-tapping screws (four per bracket and four per support). See Figures 15 and 16.

VINYL INSTALLATION

- Vinyl hoods MUST have hood flange secured to wall to prevent sagging.
- Secure hood flange to wall at 18" to 24" O.C. with fasteners suitable for wall material (wood, masonry, steel). Fasteners not provided.
- Use 1/4" tapcon screws on concrete or CMU walls.
- Use 9/32" drill for 5/16" tapping screw in steel tube/stud wall.
- Drill 3/16" drill for 5/16" lag screws in wood stud walls.

STEP 19 PRODUCT SAFETY INSTRUCTIONS

The door installer has the following responsibilities:

- Find labels in hardware box.
- Attach Product Safety Label 301603 as directed on label.
- Attach Hand Chain Safety Label 308126 to wall at eye level adjacent to hand chain, when applicable.
- Demonstrate to the door user the correct way to control the closing speed of the rolling door with crank, hand chain or push-up operation; show that two hands should be used to control the hand chain.
- Inform the door user about the following requirements from ANSI Z535.4: “Product safety labels should be periodically inspected and cleaned by the product user as necessary to maintain good legibility.” The product user should order replacement safety labels from the door manufacturer as required to maintain legibility.
- Electric operators must be installed on the door in accordance with the instructions from the manufacturer of the operator.
- Doors with sensing edge must have Safety Label 607873 attached to the bottom bar and at eye level on the drive side guide or jamb.

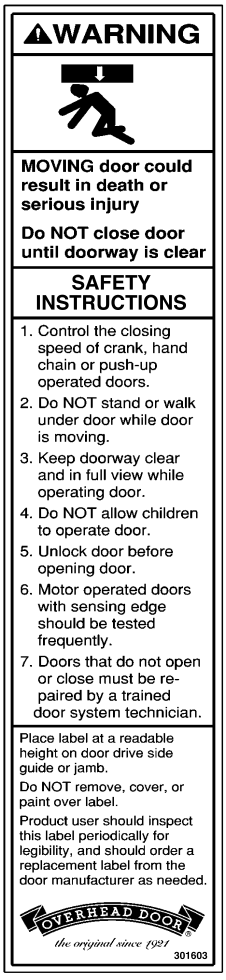

STEP 20 LINTEL INSTALLATION

- If lintel baffle is required, install baffle using 1/4" fasteners suitable for the wall material (wood, masonry, steel). Install per Figure 17 with brush aligned with centerline of coiled curtain.

STEP 21 CHAINKEEPER

- Attach to wall or door guide assembly. Instruct door users to wrap hand chain as shown in Figure 18.

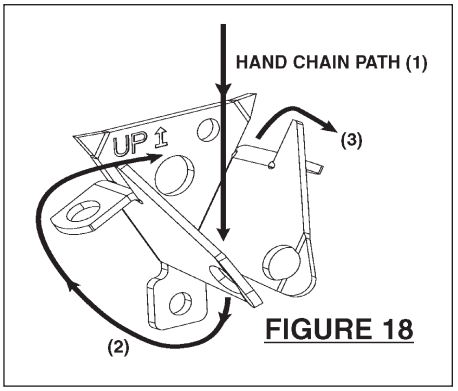

FIGURE 18

© Overhead Door Corporation

OVERHEAD DOOR®

the original since 1921

Preventive Maintenance

RECOMMENDED PREVENTATIVE MAINTENANCE
ROLLING DOORS

1. EVERY THREE MONTHS[1]

- Oil all moving parts except the clutch mechanism on fire doors and the wool pile in the guides on rolling grilles or counter doors. The guides should be lubricated with a paste wax or silicone spray.
- If electrically operated, check the operator gear reducer for leakage. If it is necessary to add oil, use Mobile Synthetic Oil AGMA 7 #SHC 75W90.
- Check the tension of the roller chain between operator and the door sprocket (see Figure A). If too loose, loosen the operator mounting bolts and slide the operator to tighten the chain (see Figure B). Retighten the operator mounting bolts.
- Oil the interior roller chain on operators without gear reducer.

2. EVERY SIX MONTHS[1]

- Oil all exposed roller chains and on electric operator dry lube the limit switches shaft threads.
- All bearings provided with grease fittings should be lubricated. If so equipped find bearings located in the drive bracket and tension end of the counterbalance.
- Fire doors should be drop tested unless more frequent testing is required by other codes. Always us the Drop Test Instructions located inside the tension headplate cover.
- On crank operated doors and grilles the crank assemblies are sealed with grease and should not require lubrication.

[1] THE ABOVE FREQUENCY OF MAINTENANCE IS FOR NORMAL OPERATION. SEVERE DUTY OR UNUSUAL OPERATING CONDITIONS MAY REQUIRE MODIFICATION OF THE TIMES BETWEEN MAINTENANCE.

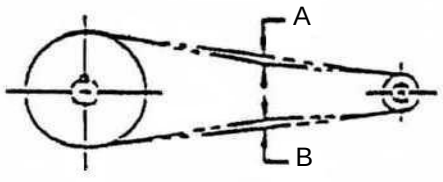

A + B must equal more than 1/4"

Figure A

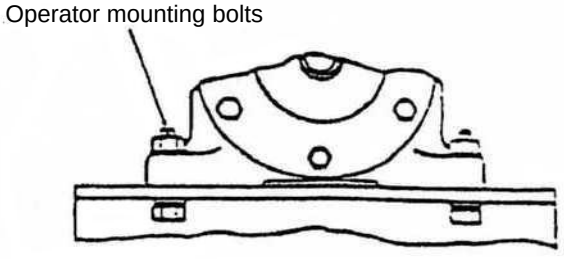

Figure B

TROUBLESHOOTING GUIDE

TROUBLESHOOTING GUIDE FOR ROLLING SERVICE DOORS

1. DOOR IS HARD TO RAISE BUT EASY TO LOWER.

SOLUTION: Springs require more turns. Raise door to fully opened position and add spring tension (1/8 turn at a time) until the same resistance is felt lowering the door as is felt raising the door. Adjust tension wheel with steel winding bars 3' long and diameter ½" or ¾".

2. DOOR IS HARD TO LOWER BUT EASY TO RAISE.

SOLUTION: Springs require fewer turns. Raise door to fully opened position and remove spring tension (1/8 turn at a time) until results listed in example 1are achieved.

3. DOOR HANGS UP AT ENTRANCE INTO GUIDES.

SOLUTION: Bellmouths might be out of position away from the headplate allowing endlocks to wedge. Loosen attachment nut and locate edge of bellmouth snug against headplate and tighten.

Endlocks might have become loose and tilted out of position. Drill out loose fasteners and reattach with suitable fasteners.

Curtain might have been bent and damaged enough to wedge in guides. In some cases the bellmouths can be removed from the guide entrance and the curtain lowered outside of the guides and straightened. Be careful not to allow curtain to rapidly unwind off the counterbalance.

4. ELECTRIC OPERATOR STOPS TOO SOON; DOES NOT REACH THE OPEN OR CLOSED POSITION.

SOLUTION: Operator limit switch setting has become out of phase with the door. Reset the limit switches. See operator installation instructions for method of resetting limits.

5. OPERATOR DOES NOT RUN.

SOLUTION: Verify that electric power is available to the operator.

Verify 24 vac control voltage from operator transformer.

Verify condition of hoist interlock switch.

Verify condition of sidebar interlock switch.

the original since 1921

Warranty

One Year Limited Warranty

The authorized distributor of Overhead Door Corporation products whose name appears below ("Seller) warrants the products sold under this warranty to be free from defects in material and workmanship uner normal use and service for a period of **ONE YEAR.** Labor to repair or replace is included during this warranty period. This warranty extends only to the original purchaser ("buyer"), and expires one year after the date of installation.

Sellers sold obligation under this warranty is limited to repairing or replacing any part, which shall be determined by Seller to be defective, and is conditioned upon buyer giving written notice of any such defect to Seller within the warranty period. If Seller concludes that repair or replacement is necessary, Seller will commence work within a reasonable time after the decision to repair or replace is made.

This warranty does not apply to any product which has been altered, modified, damaged or deteriorated due to abuse, neglect, misuse or by accident. Warranty will be **VOID** if any repairs are made or attempted to be made by any person not authorized by the Seller, or if proper maintenance and painting practices are not followed.

THERE IS NO WARRANTY OF MERCHANTABILITY, WARRANTY OF FITNESS FOR ANY PARTICULAR PURPOSE OR ANY OTHER IMPLIED WARRANTY BEYOND THE ONE-YEAR PERIOD DESCRIBED ABOVE. SELLER SHALL NOT BE LIABLE FOR INCIDENTAL OR CONSEQUENTIAL DAMAGES NOR FOR ANY FURTHER LOSS WHICH MAY ARISE IN CONNECTION WITH ANY CLAIM.

This warranty gives you specific legal rights, and you may also have other rights which vary from state to state. Some states do not allow limitations on how long an implied warranty lasts and some states do not allow the exclusion or limitation of incidental or consequential damages, so the above limitations or exclusions may not apply to you.

Seller has not established any informal dispute settlement procedure of the type described in the Magnuson-Moss Warranty Act. Claims under this warranty must be made in writing to the Selling Distributor whose name and address appears below within the applicable warranty period. (Proof of purchase and identification as the original purchaser may be required).

ORIGINAL PURCHASER: _____

INSTALLATION ADDRESS: _____

SELLER: OVERHEAD DOOR CO.
SHERMAN DENISON

SELLER'S ADDRESS: 316 W. CHESTNUT
DENISON, TX 75020
(903) 463-2083

DATE OF INSTALLATION: _____

SIGNATURE OF SELLER _____

ELECTRIC MOTOR OPERATOR

TABLE OF CONTENTS

A. ASSEMBLY, INSTALLATION, OPERATION AND SERVICE INSTRUCTIONS

B. PARTS BREAKDOWN

OVERHEAD DOOR®
the original since 1921

COMMERCIAL OPERATOR

Assembly - Installation - Operation
and Service Instructions

MODEL RG+ PLUS

FOR ROLLING DOORS AND GRILLES

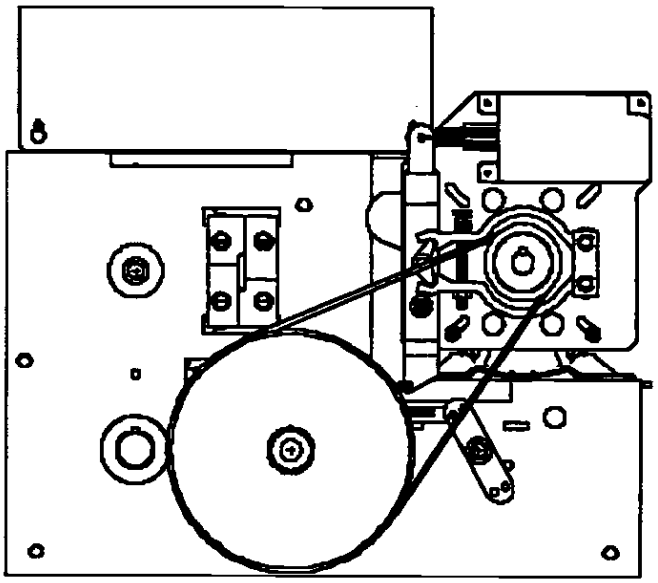

NOT FOR RESIDENTIAL USE

CONTENTS

Safety Information	PAGES 1-2
Installation Instructions	
Top of Hood Mount	3-7
Front of Hood Mount	8-9
Wall Mount	10-11
Bench Mount	12-13
On JFN Rolling Door	
Top of Hood	14
Front of Hood	15
Wiring Instructions	16-17
Limit Switch Adjustment	18
Clutch Adjustment	19
Brake Adjustment	19
Belt Tightenings	20-21
Sensing Edge Switch Installation	22
Wiring Diagrams	23-25
Warranty	BACK

After installation, keep these instructions in area of push button station.

P/N 109460-0001

2/01/95

OVERHEAD DOOR®
the original since 1921

SAFETY INFORMATION

The terms opener and operator mean the same thing when used in the following text.

⚠ WARNING

Overhead doors are large, heavy objects that move with the help of springs under high tension and electric motors. Since moving objects, springs under tension, and electric motors can cause injuries, your safety and the safety of others depend on you reading the information in this manual. If you have questions or do not understand the information presented, call your nearest service representative.

POTENTIAL HAZARD	EFFECT	PREVENTION
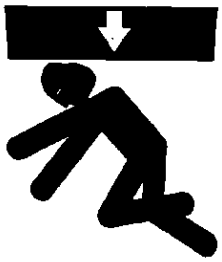 MOVING DOOR	Can Cause Serious injury or death	Do Not operate unless the doorway is in sight and free of obstructions. Keep people clear of opening while door is moving. Do Not allow children to play with the door operator. Do Not change control to momentary contact unless an external reversing means is installed.
ELECTRICAL SHOCK	Can Cause Serious burns or death	Turn off electrical power before removing powerhead cover. Operator must be electrically grounded.
HIGH SPRING TENSION	Can Cause Serious injury or death	Do Not try to remove, repair or adjust any structure, wood block, steel bracket, cable or anything else to which door spring parts are fastened. Repairs and adjustments must be made by a trained service person using proper tools and instructions.

SAFETY INSTRUCTIONS

1. Read manual and warnings carefully.
2. Keep the door in good working condition. Periodically oil all moving parts of door.
3. If the door has a safety edge, check its operation daily. Make any necessary repairs to keep it functional.
4. At least twice a year, manually operate the door by disconnecting it from the operator. The door should open and close freely. If it does not, correct the condition causing the malfunction.
5. The operator motor is protected against burnout by an internal overload protector. If the operator ceases to function because the motor protector has tripped, correct any condition which may have caused the overload. When the motor has cooled, the overload protector will automatically reset and normal operation can be resumed.
6. In case of power failure, the door can be operated manually:
    1. Pull cable to release door from drive system and manually raise or lower door or grille.
    2. If equipped with chain hoist, pull cable to engage hoist and pull on hand chain.
    3. Cable(s) MUST remain pulled while manually operating the door.
7. Keep these instructions in a prominent location near the push button station.

In the following text, the words **Danger, Warning, and Caution** are used to emphasize important safety information. The word:

DANGER means that severe injury or death will result from failure to follow instructions.
WARNING means that severe injury or death can result from failure to follow instructions.
CAUTION means that property damage or injury can result from failure to follow instructions.

The word **NOTE** is used to indicate important steps to be followed or important differences in equipment.

TOP OF HOOD MOUNT

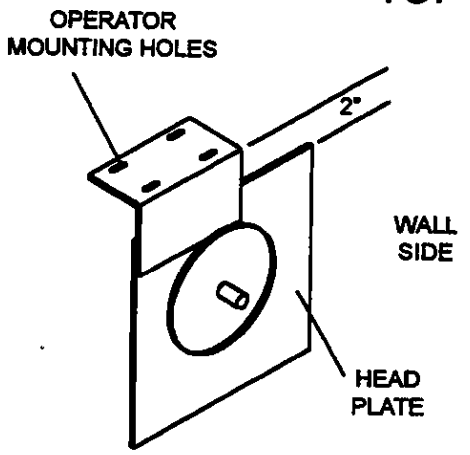

FIGURE 1

NOTE: For new installations, the headplate should have stud bolts welded in the plate for faster installation. If bolts are not present, the mounting bracket may be welded to the headplate after it has been clamped to the headplate according to the dimensions shown in Figure 1.

STEP 1

- Bolt the mounting bracket (P/N 307341-0001) to the door headplate.
- If welding is required in lieu of bolts see Figure 1 and NOTE at side of Figure 1.

STEP 2

- Slide the driven sprocket and key onto the door shaft.

STEP 3

- Set operator on mounting bracket as shown in:
  A. Figures 2A and 2B for right side looking out OR
  B. Figures 2C and 2D for left side looking out.

CAUTION

Because the motor is NOT over the mounting plate the operator MUST be supported until Step 4 is complete.

STEP 4

- Install the four (4) 3/8-16 x 3/4" carriage bolts thru the holes along the edge of the operator mounting base and into the matching set of holes in mounting bracket.
- Install the four (4) 3/8-16 nuts but TIGHTEN ONLY FINGER TIGHT.

ALLOW AT LEAST 3" CLEARANCE ABOVE ELECTRICAL BOX FOR SERVICING FOR TOP OF HOOD INSTALLATIONS.

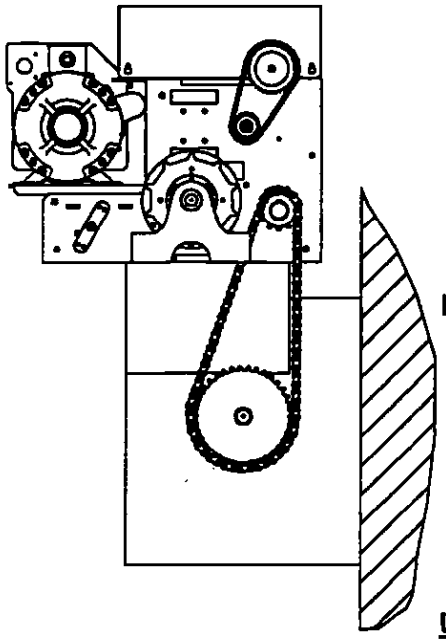

NOTE: A brace to the wall for stabilizing is recommended.

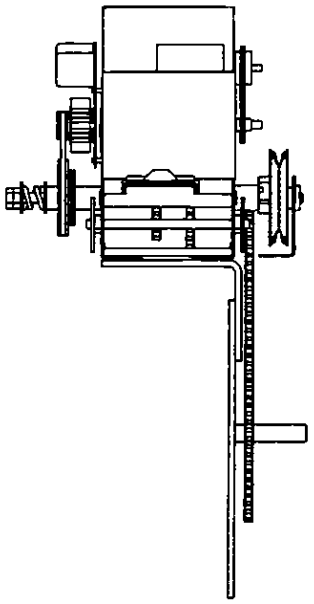

USE TYPE "D" WIRING

FIGURE 2A **FIGURE 2B**

FOR RIGHT HAND SIDE LOOKING OUT INSTALLATIONS.

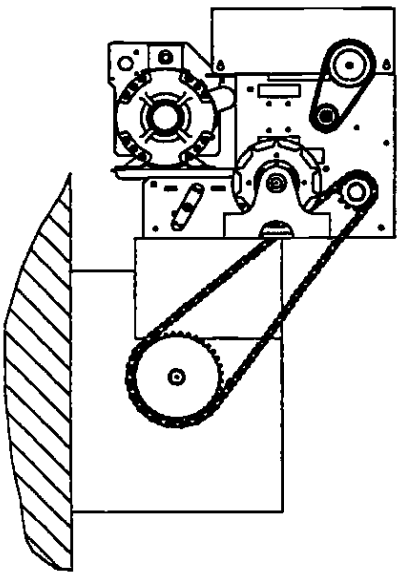

NOTE: A brace to the wall for stabilizing is recommended.

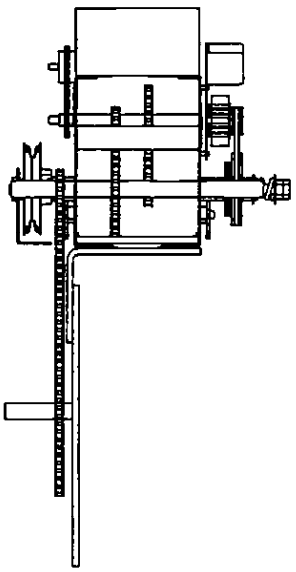

USE TYPE "C" WIRING

FIGURE 2C **FIGURE 2D**

FOR LEFT HAND SIDE LOOKING OUT INSTALLATIONS.

STEP 5

- Make electrical power connections to the operator.
  - Refer to "Wiring Instructions" on page 16.
  - Complete Step 1 on page 16.

STEP 6

- Prepare Control Wiring for Type D or Type C Output Shaft Rotation.
  - Read "Connection of Control Devices" on page 16.
  - Complete Step 2 on page 16.

STEP 7 See "Limit Switch Adjustment" on page 18.

- Limit switches are not preset at the factory because the settings will vary with door size and Type rotation. To properly adjust:
  - Be certain a brass jumper is between Control Terminals "T" and "T".
  - Connect a short jumper wire to Control Terminal "C" and touch other end to "DN".
  - This should cause the operator output shaft to rotate as if to close the door. *See NOTE below.
  - Hold jumper on "DN" until limit switch stops motor.

*** NOTE:**

- If output shaft rotation is in direction that would open the door and electrical Power Source is three (3) phase; disconnect the power and interchange any two of the three power input lines. If Power Source is single phase review and repeat Step 6 above.

STEP 8

- Slide the 12 tooth sprocket and key onto the operator output shaft on side over door sprocket.
- Align the driven sprocket with the drive sprocket.
- Secure both sprockets by tightening the set screws
- Tighten set screws over the key then tighten other set screws.

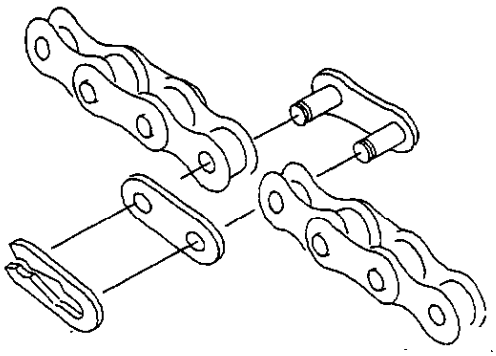

FIGURE 3

STEP 9

- Slide operator forward to end of mounting base slots.
- Fully close door.
- Wrap #50 chain around the two sprockets to determine the correct length.
- To shorten chain, punch out the pin which will leave an inside link nearest the desired length.
- Wrap proper length chain around the sprockets and connect using the master link. See Figure 3.

STEP 10

- Slide operator toward the rear of the slots to tighten chain.
- Tension chain as shown in Figure 4.
- Firmly tighten the mounting bolts and locking nuts.

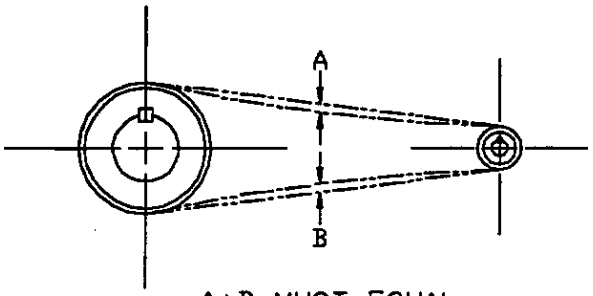

A+B MUST EQUAL
NO MORE THAN 1/4"

FIGURE 4

STEP 11

- Touch jumper from Terminal "C" to Control Terminal "UP" and hold until bottom edge of door is even with top of door opening.
- Adjust the "UP" limit switch and the "Auxiliary Up" limit switch (refer to page 18, "Limit Switch Adjustment").

STEP 12

- Using jumper wire, check accuracy of both UP & DOWN limit switch settings by running door to full open and closed position.

STEP 13

- Complete Step 4 on page 17.

IF OPERATOR IS EQUIPPED WITH EMERGENCY RELEASE, PROCEED WITH STEP 14. IF NOT, PROCEED TO STEP 16.

STEP 14

- Select desired side for Emergency release cable location.
- Bolt Pulley and Bracket to operator frame on desired side as shown in Figure 5A.
- Attach looped end of cable in proper disengage lever hole using #41 roller chain connecting link.

STEP 15

- Route the release cable thru the pulley and direct cable toward floor.

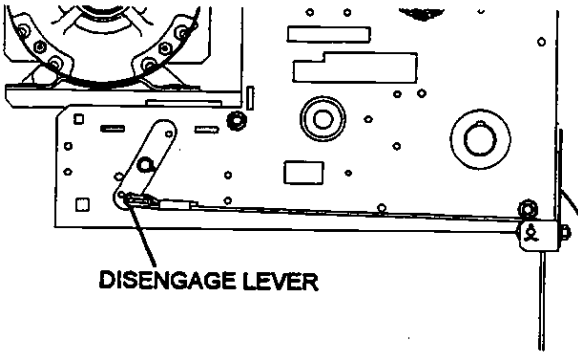

FIGURE 5A

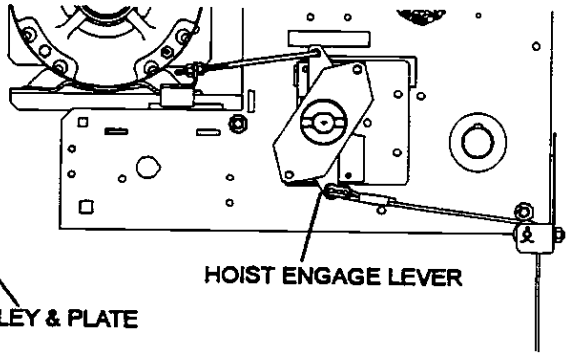

FIGURE 5B

IF OPERATOR IS EQUIPPED WITH HAND HOIST PROCEED WITH STEP 16.

STEP 16

- Bolt Pulley and Bracket to operator frame as shown in Figure 5A.
- Attach looped end of cable in Engage lever hole using #41 roller chain connecting link. See Figure 5B.

STEP 17

- Route the release cable thru the pulley and direct cable toward floor.

STEP 18

- Thread one end of the hand chain thru one hole in chain guide around the hand wheel and then thru the other hole in chain guide.
- Twist open one of the chain end links. See Figure 6.
- Make certain hand chain is not twisted and then join chain ends together.

METHOD FOR SPLICING HAND CHAIN

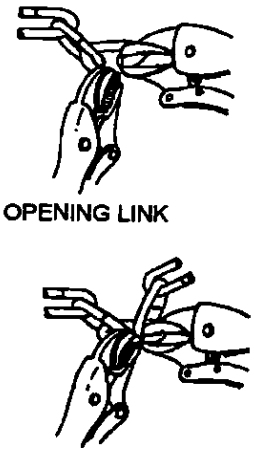

FIGURE 6

FRONT OF HOOD MOUNT

NOTE: For new installations, the headplate should have stud bolts welded in the plate for faster installation. If bolts are not present, the mounting bracket may be welded to the headplate after it has been clamped to the headplate according to the dimensions shown in Figure 7. If welding is required, use the Top of Hood mounting bracket P/No. 307341-0001.

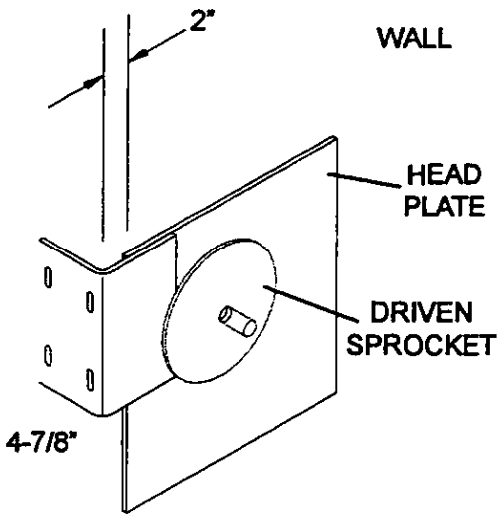

FIGURE 7

IF BOLTED:

STEP 1A

- Refer to Figures 8B or 8D for proper relationship of bracket to operator.
- Bolt operator frame to Front of Hood mounting bracket (P/No. 307341-0002) using the 3/8-16 x 3/4" carriage bolts and keps nuts.
- Firmly tighten the nuts.

STEP 2A

- Mount the operator with mounting bracket to the headplate using 1/2-13 nuts provided. TIGHTEN ONLY FINGER TIGHT.

IF WELDED:

STEP 1B

- If headplate does not have welded studs, mounting bracket must be welded to headplate. See Figure 7 and NOTE if welding is required.

STEP 2B

- The operator must be bolted to bracket AFTER welding is completed.
- Hold operator against mounting bracket in position shown in Figures 8B or 8D.
- Use 3/8-16 x 3/4" carriage bolts and 3/8-16 keps nuts to secure operator to bracket.
- Firmly tighten the keps nuts.

STEP 3

- Slide driven sprocket and key onto the door shaft.

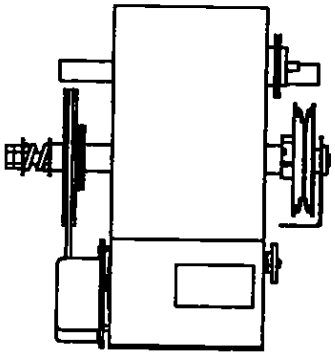

NOTE: A brace to the wall for stabilizing is recommended.

USE TYPE "D" WIRING

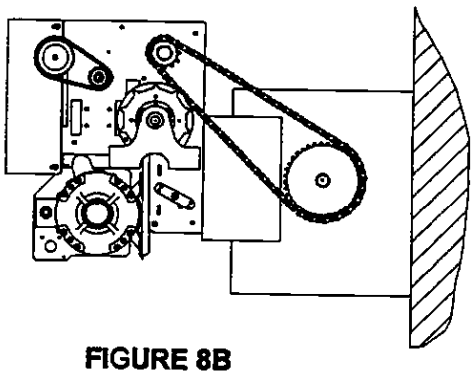

FIGURE 8A **FIGURE 8B**

FOR RIGHT HAND SIDE LOOKING OUT INSTALLATIONS.

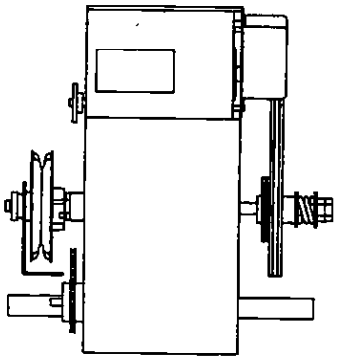

NOTE: A brace to the wall for stabilizing is recommended.

USE TYPE "C" WIRING

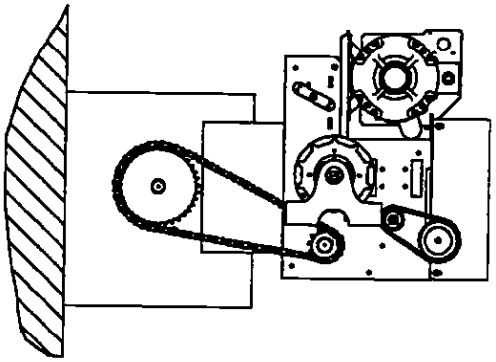

FIGURE 8C **FIGURE 8D**

FOR LEFT HAND SIDE LOOKING OUT INSTALLATIONS.

TO COMPLETE INSTALLATION, PROCEED WITH STEPS 5 THRU 18 PAGES 5 THRU 7. SEE EXCEPTIONS BELOW.

EXCEPTIONS:

STEPS 9 and 10: Chain tension adjustment:

- For Bolted on Mounting Bracket
  - Slide mounting bracket in to measure chain and to apply chain.
  - Slide mounting bracket back to tension chain.
- For Welded on Mounting Bracket
  - Move operator to bottom of bracket slots for Right Hand Mount to measure chain and to apply chain.

  or
  - Move operator to top of bracket slots for Left Hand Mount to measure chain and to apply chain.

STEPS 15 or 17: Cable Routing

- Cables are routed directly toward the floor WITHOUT the use of pulleys.

WALL MOUNT

(FOR BELOW DOOR SHAFT AND EITHER RIGHT OR LEFT SIDE LOOKING OUT)

STEP 1

- Bolt the four (4) wall mounting feet to each corner of the operator frame using (4) 3/8-16 carriage bolts, keps nuts and flat washers.
- Locate bolt heads on inside of operator frame.
- The slotted hole in the bracket is to go against the operator frame.
- Slide ALL feet in same direction and tighten nuts enough to keep feet from sliding but do not securely tighten.
- See Figure 9

STEP 2

- Place the driven sprocket and key on the door shaft.

STEP 3

- Select mounting location. Refer to Figures 10A or 10B.
- Position operator (with mounting feet attached) against wall as shown in Figure 10C.
- Secure to wall using anchor bolts into the wall, bolting thru the wall, or welding to a steel pad if one has been provided.

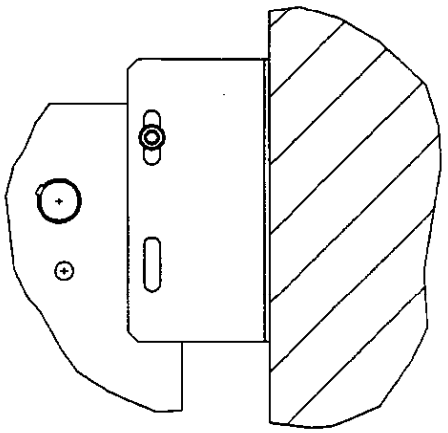

FIGURE 9

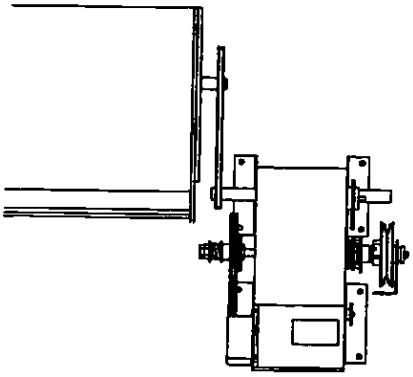

FIGURE 10A

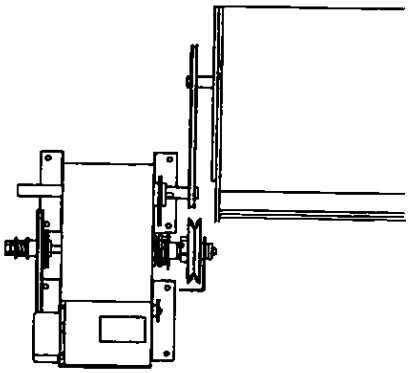

FIGURE 10B

WIRE TYPE D

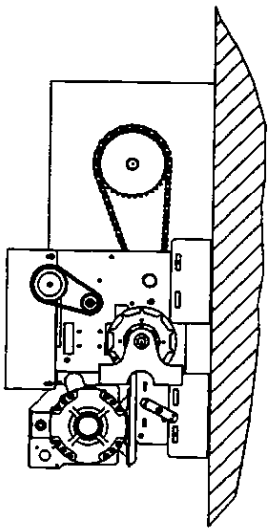

FIGURE 10C

TO COMPLETE INSTALLATION, PROCEED WITH STEPS 5 THRU 18 PAGES 5 THRU 7. SEE EXCEPTIONS BELOW.

EXCEPTIONS:

STEPS 9 and 10: Chain tension adjustment:

- Slide operator up in mounting bracket slots to measure chain and to apply chain.
- Let operator slide down after chain is on to tension chain.

STEPS 15 or 17: Cable Routing

- Cables are routed directly toward the floor WITHOUT the use of pulleys.

BENCH MOUNT

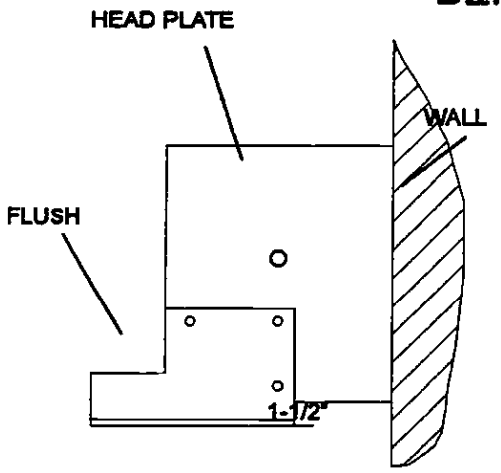

FIGURE 11

NOTE: For new installations, the headplate should have stud bolts welded in the plate for faster installation. If bolts are not present, the mounting bracket may be welded to the headplate after it has been clamped to the headplate according to the dimensions shown in Figure 11.

STEP 1

- Use 1/2-13 nuts to bolt the mounting bracket to the headplate unless welding is required.
- If welding is required, see Figure 11 and the NOTE alongside.

STEP 2

- Slide the driven sprocket and key onto the door shaft.

STEP 3

- Set operator on mounting bracket as shown in:
  - A. Figures 12A and 12B for right side looking out OR
  - B. Figures 12C for left side looking out.

TO COMPLETE INSTALLATION, SEE TOP OF HOOD INSTALLATION STEPS 5 THRU 18 PAGES 3 THRU 7.

CAUTION

Because the motor is NOT over the mounting plate the operator MUST be supported until STEP 4 Page 3 is complete.

NOTE: A brace to the wall for stabilizing is recommended.

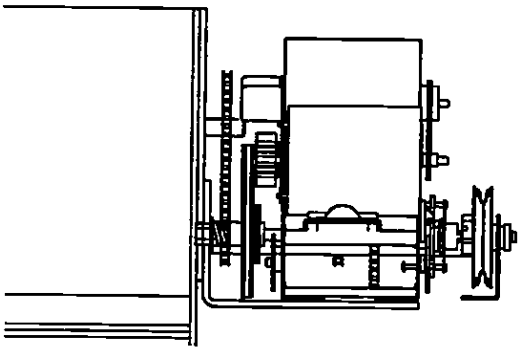

FIGURE 12A

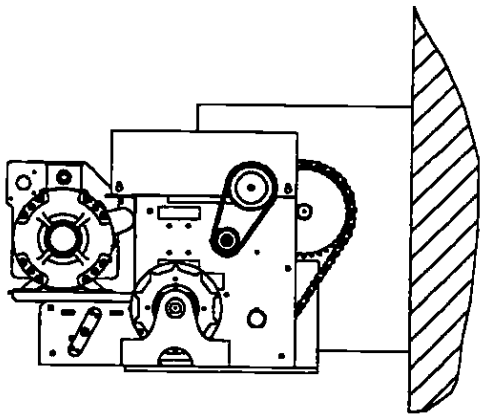

FIGURE 12B

USE TYPE "D" WIRING

FOR ALL FIGURES

LEFT OR RIGHT HAND MOUNT

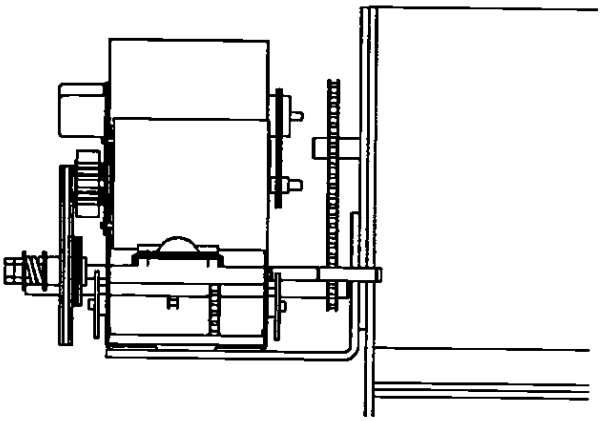

FIGURE 12C

LEFT HAND MOUNT

NOTE: The RG+ with HOIST is NOT available for left side looking out as a Bench Mount Model.

INSTALLATION OF RG+ ON JFN ROLLING DOOR

(Rounded Head Plate Type Door)

Top of Hood

> **NOTE:** If electric operation is being added to an existing door with rounded headplates, it is necessary to close door and remove hood and prepare headplate for the operator mounting bracket. FOR NEW DOORS OPERATOR BRACKET MUST BE INSTALLED BEFORE THE HOOD IS INSTALLED.

STEP 1

- Install the 3/8-16 x 1 carriage bolts in headplate and retain by pushing stud receivers onto bolt threads. (See Figure 13)

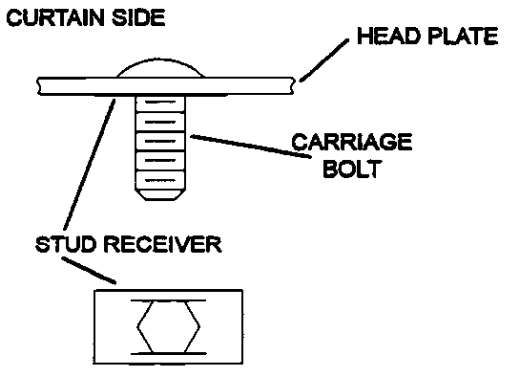

FIGURE 13

STEP 2:

- Install hood and then fasten mounting bracket (P/N 307342-0001) on carriage bolts in headplate using nuts and washers provided.
- Firmly tighten bolts and nuts.

STEP 3:

- Set operator on the mounting bracket as shown in Figures 14A and B for right side installations and Figure 14C for left side.

> **CAUTION:**
>
> **Because the motor is not over the mounting base, the operator MUST be supported until STEP 4 is completed.**

STEP 4

- To complete installation refer to STEPS 4 THRU 18 beginning on page 3.

> **NOTE:** A brace to the wall for stabilizing is recommended.

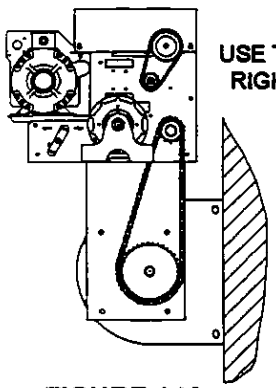

FIGURE 14A

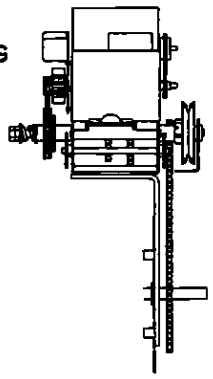

FIGURE 14B

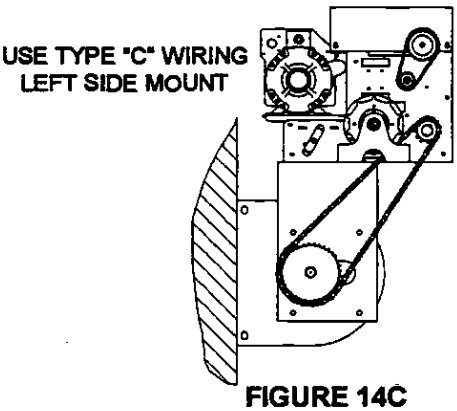

FIGURE 14C

INSTALLATION OF RG+ ON JFN ROLLING DOOR

(Rounded Head Plate Type Door)

Front of Hood

NOTE: If electric operation is being added to an existing door with rounded headplates, it is necessary to close door and remove hood and prepare headplate for the operator mounting bracket. FOR NEW DOORS OPERATOR BRACKET MUST BE INSTALLED BEFORE THE HOOD IS INSTALLED.

STEP 1

- Install the 3/8-16 x 1 carriage bolts in head plate and retain by pushing stud receivers onto bolt threads. (See Figure 13)

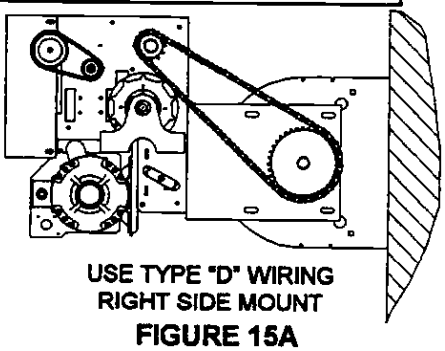

USE TYPE "D" WIRING
RIGHT SIDE MOUNT

FIGURE 15A

STEP 2

- Install the hood.

STEP 3

- Bolt front of hood mounting bracket (P/N/ 307342-0002) to bottom of operator frame using the 3/8-16 x 1" carriage bolts and keps nuts.
- Firmly tighten.
- See Figures 15A and 15B for right hand installation and Figure 15C for left hand installation for proper relationship of bracket to the operator.

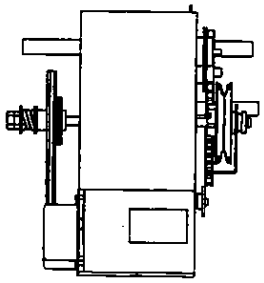

FIGURE 15B

STEP 4

- Mount the operator with mounting bracket to headplate using 3/8-16 nuts and washers provided.
- Do NOT fully tighten.

STEP 5

- Slide the driven sprocket and key on the door shaft.

NOTE: Remaining steps are covered starting with Step 5 beginning on page 3.

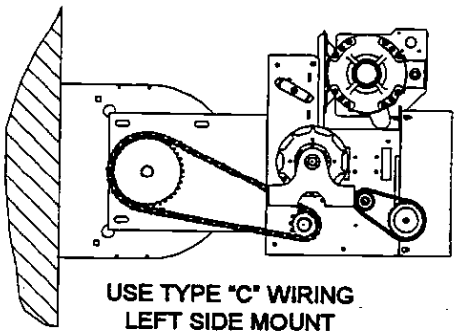

USE TYPE "C" WIRING
LEFT SIDE MOUNT

FIGURE 15C

WIRING INSTRUCTIONS

CONNECTION TO BUILDING ELECTRICAL POWER:

This operator has been wired and tested for the voltage, phase and frequency (hertz) as shown on the operator nameplate located on the electrical box cover.

STEP 1

- Check nameplate ratings with building power line rating to make certain they agree.
- Make power connections to terminal strip located and identified in the electrical box.
- Follow local wiring codes for electrical wiring. If there is not a local code make wiring connection in accordance with the National Electric Code

> **CAUTION**
>
> **It is important that the operator be properly grounded. Connect the power system grounding conductor to the green grounding screw.**

CONNECTION OF CONTROL DEVICES:

Control voltage is supplied from a N.E.C. Class 2 – 24 volt transformer. Also inside the electrical box is a twelve terminal panel for connection of control equipment (push buttons, safety devices, etc.). A three screw strip is located on the side of the box for connecting a radio receiver.

This operator was shipped from the factory wired for TYPE D output shaft rotation. See Installation Figures on pages 4; 9; 11; 13; 14 and 15 for TYPE wiring required. If installation mounting condition for this job indicates TYPE C needed change as outlined in Step 2 below.

To verify the correct wiring requirements, compare the Decals (Figure 16, Page 17) on the Mounting Plates. An arrow on these decals determines TYPE C or D wiring by pointing in the direction the output shaft rotates as the door opens.

STEP 2

- Refer to page 25 for External Wiring Diagram for desired Rotation wiring and Top Limit Switch and Cam positions.
- If it has been determined TYPE C rotation is required:
  - Interchange the wires to Terminals "A" & "B".
  - Remove the two keps nuts holding the Top single pole limit switch and invert it as shown for TYPE C on Wiring Diagram.
  - Remove the top limit switch cam and also invert it as shown for TYPE C on Wiring Diagram.
- DO NOT add Momentary Contact jumpers until AFTER Limit Switch Adjustment has been completed.

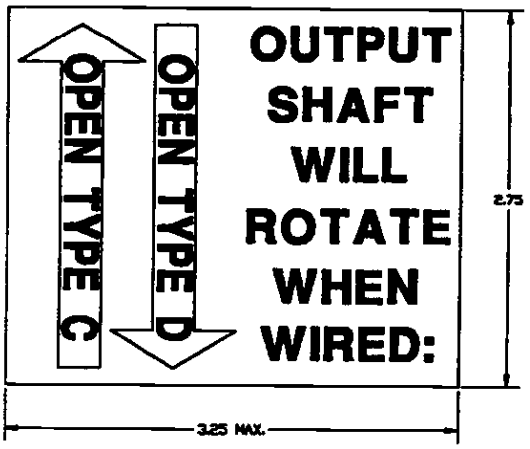

FIGURE 16

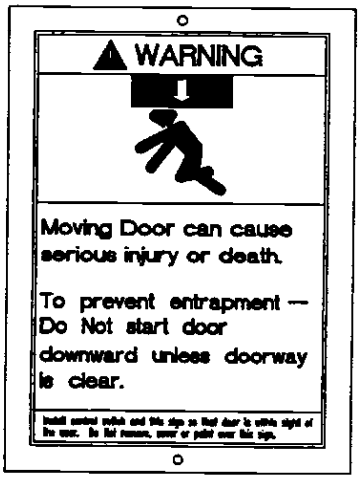

WARNING PLACARD

STEP 3

- To check for proper phase rotation when power source is three phase refer to Step 1, page 18. See also NOTE Page 5.
- If rotation is wrong, interchange any two of the three input power leads.

STEP 4

- Connect external control devices as shown on page 25 for External Wiring Diagram.
- If a pedestrian pass door is to be used, or if the door locking system is to be retained, an interlock switch MUST be used to prevent motor operation when the pass door is open or the door is locked. Connect interlock switch as shown in Figure 17.

CAUTION

If control is by 3-button station only, locate the push button so that the door is within sight of the user. Attach the warning placard adjacent to the push button.

STEP 5

- If momentary contact control action is to be used, it is ***STRONGLY*** recommended that a sensing edge switch should be used. See page 25 for installation of a sensing edge switch.

For special control actions not covered in the wiring diagrams shown on page 25, contact the Overhead Door Operator Division - Shelbyville, Indiana

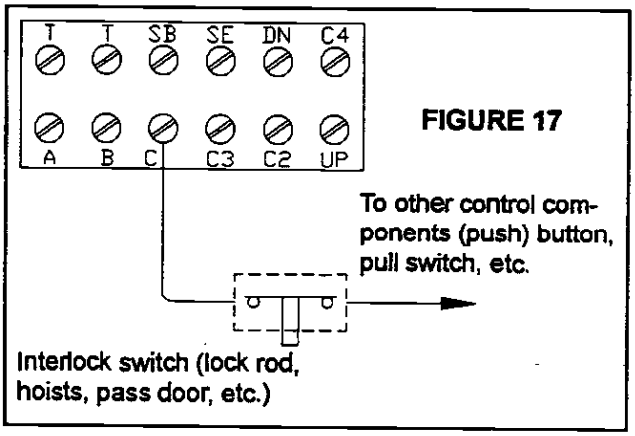

FIGURE 17

LIMIT SWITCH ADJUSTMENT

STEP 1

- So that limit switches accurately stop the door in the full open and closed position, the limit switch cams must operate their respective switches by striking the steep ramp of the switch lever. See Figure 18.
- If the cams are not striking the steep slope first, refer to Steps 1,2 and 3 under "Wiring Instructions".

STEP 2

- Coarse adjustments of limit switches are made by:
  - Loosening the set screw in the appropriate cam. (use 3/32" Allen wrench)
  - Rotating cam required direction
    - Toward switch ramp will decrease amount of door travel.
    - Away from ramp will increase door travel.
- When adjustment is within 3" or less of the desired door stopping position, proceed to Step 3.

STEP 3

- Fine adjustment of limit switches is made by turning the slotted machine screws in the cams:
  - Rotating screws clockwise will increase the amount of door travel a little with each turn.
  - Rotating counterclockwise will decease door travel.
- To insure consistent limit switch action, the gap between cam jaws should not exceed 3/16". See Figure 18.

STEP 4

- After UP and DOWN limit switches have been adjusted; adjust the top cam to actuate the TOP switch 6" to 12" before the door is fully open. This switch permits closing of door by Radio Control or single button.

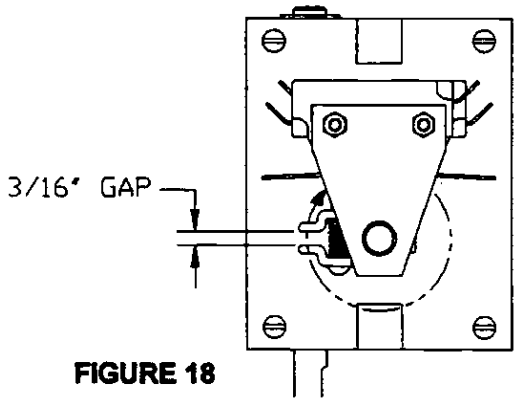

FIGURE 18

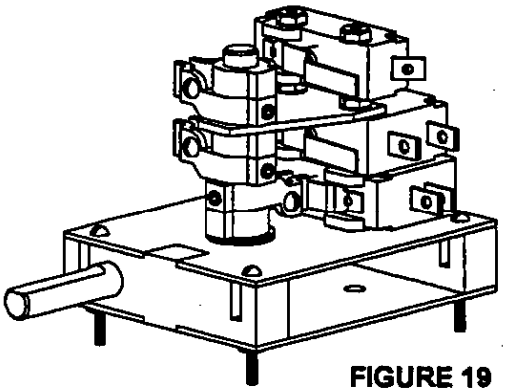

FIGURE 19

CLUTCH ADJUSTMENT

(AN OPTIONAL FEATURE; KIT No. 108252-0001)

The clutch is intended to provide protection for the door, the operator and associated equipment in the event of a malfunction or overload condition during operation. It is not intended for entrapment protection.

STEP 1

- Disengage jam nut from adjusting nut.
- Turn adjusting nut clockwise to increase tension on clutch discs and thus increase torque output .
- When properly adjusted, tighten jam nut against adjusting nut.

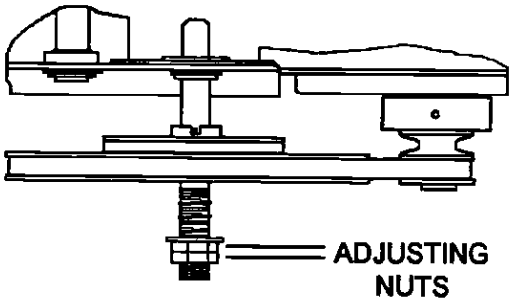

FIGURE 20

NOTE: Periodically check the system for proper clutch action. If clutch starts to slip after working properly for some time, check manual operation of door ***BEFORE*** adjusting clutch. Problem may be with the door action.

BRAKE ADJUSTMENT

The brake will normally not require adjustment but might be needed if the brake or motor has required service. For best performance and maximum life, the brake must be adjusted for correct brake tensioning when the solenoid is ***NOT*** energized.

STEP 1

- To increase brake tension, tighten locking nut "A". The amount of tension is critical to the life of the solenoid.
  - If there is excessive "hammering" when the solenoid is energized, there is too little tension on solenoid plunger. This will cause solenoid to self destruct.
  - Excessive noise indicates too much tension which will cause solenoid coil to heat and burn out.

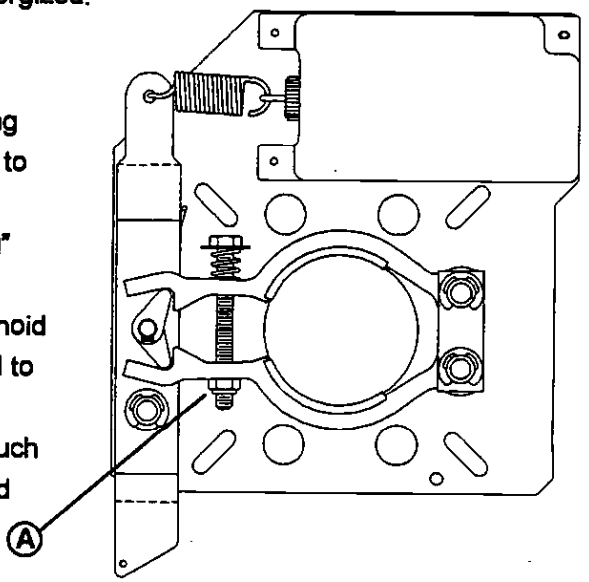

FIGURE 21

BELT TIGHTENING OR BELT CHANGING

IMPORTANT

The belt used on the Model RG+ can NOT be "rolled on" as with conventional v-belts. The motor must be moved forward to remove the old belt, replace with the new belt and then slide the motor back for belt tension.

STEP 1

- Loosen the motor retaining bolts.

STEP 2

- Slide motor forward and remove old belt and replace with new belt.

STEP 3

- Slide motor back until belt is taut but not tight and tighten motor retaining bolts. Hint: use a hammer handle between the motor and the middle frame spacer to force motor back while tightening.

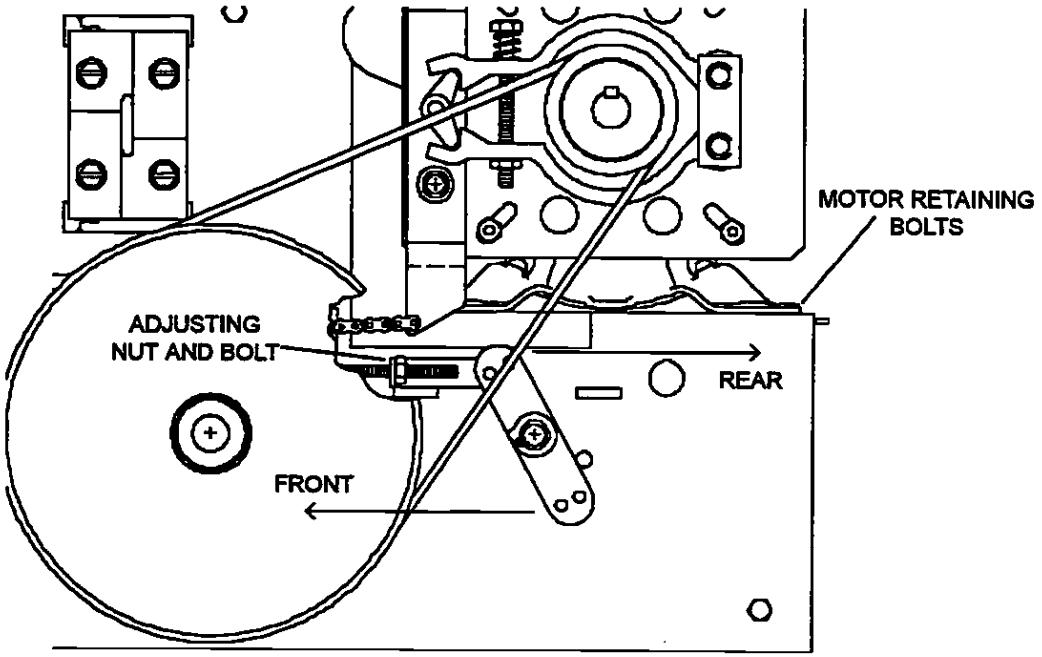

FIGURE 22

FOR OPERATORS WITH EASY RELEASE

STEP 4

- Check dentil disengage arms to make certain they are just touching. (See Figure 23) Adjust the nut controlling the detil cam distance to obtain light contact. NOTE: If the belt has been tightened, this nut must be loosened. When installing a new belt, this nut may have to be tightened.

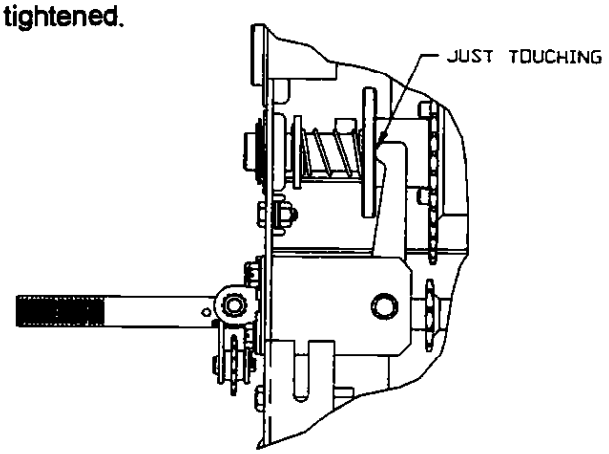

FIGURE 23

FOR OPERATORS WITH HOIST

- For operators with hoist, there is an adjustment for the brake release arm to compensate for relocation of the motor. This adjustment bolt and nuts are shown in Figure 24. Adjust nuts to increase the distance between the two levers if the belt is being tightened. Check the brake to make certain it is engaged after making this adjustment.

NOTE: IF TIGHTENING THE BELT ONLY, DO STEPS 1, 3 AND 4 ONLY.

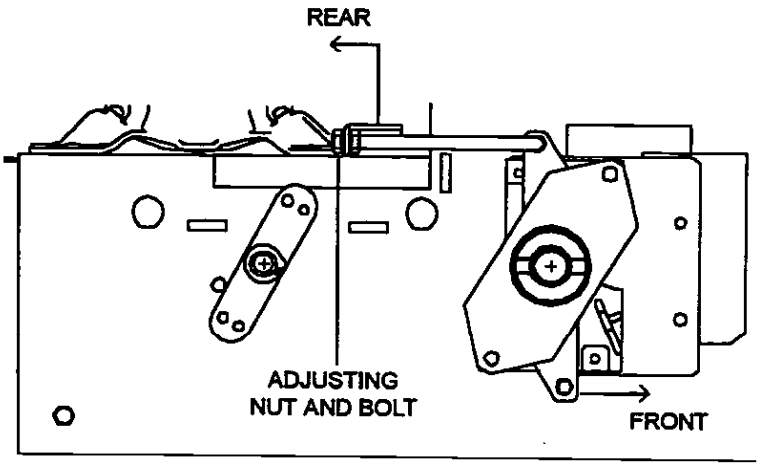

FIGURE 24

SENSING EDGE SWITCH INSTALLATION

Figure 25 shows an example of a typical sensing edge installation. Left hand side is shown but right hand is a mirror image of this. See also page 25 for wiring diagram.

STEP 1

- If wiring from sensing edge switch to operator is coiled cord or 2 wire jacketed cord:
  - Install junction box 12" above the center of the door opening on same side as sensing switch.
  - Secure one end of cord to junction box using a cable clamp.
- If connection is to be made thru a take up reel cord:
  - Install on same side as sensing edge switch and above door opening and slightly to the side.
  - Install junction box adjacent to take up reel and route the stationary cord from the reel to the box and secure with a cable clamp.

STEP 2

- Secure other end of cord (straight, coiled or reel) to sensing edge switch enclosure using a cable clamp.

STEP 3

- Connect wires of cord to sensing edge switch using wire nuts or other suitable wire connectors.

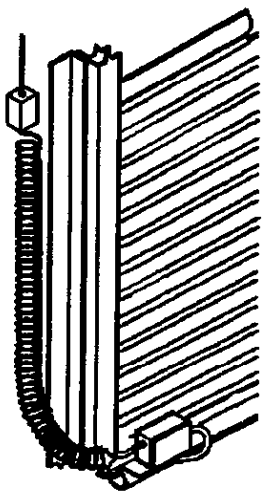

FIGURE 25

STEP 4

- Run a straight 2 wire cord from the junction box (Step 1) to the operator electrical box.
- Secure using cable clamp on each end.

STEP 5

- Join wires in cord from operator to wires in cord from switch using wire nuts or other suitable wire connectors.

STEP 6

- Connect one wire of the cord to Terminal "C3" and the other wire to Terminal "SE". See Wiring Diagram Page 25.

STEP 7

- Operate the door to make certain cord is free to travel and does not become snared during door opening or closing.
- Check sensing edge switch for proper operation.

WIRING DIAGRAM

INTERNAL SINGLE PHASE JST+/RG+

(FOR EXTERNAL WIRING SEE PAGE 25)

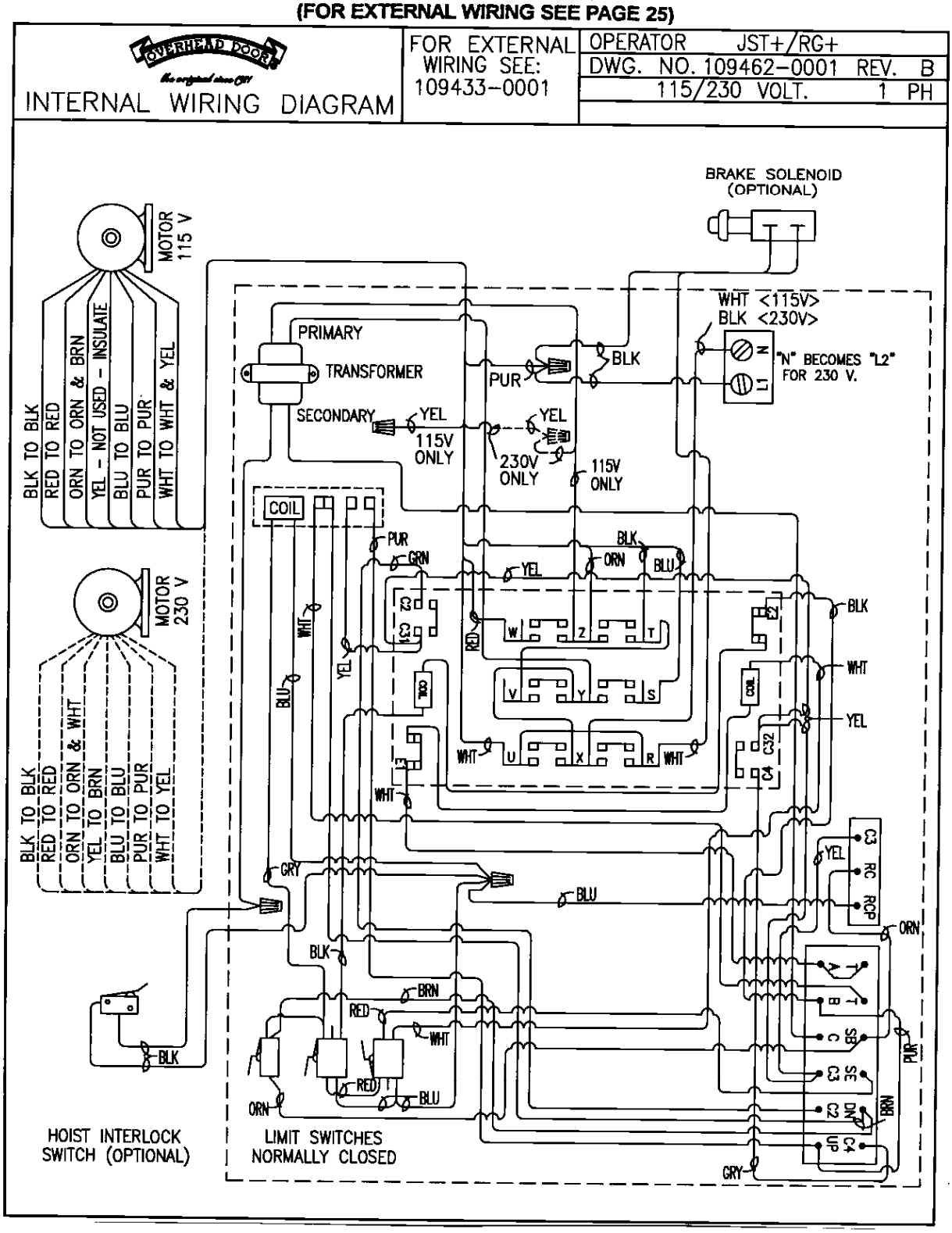

WIRING DIAGRAM

INTERNAL THREE PHASE JST+/RG+

(FOR EXTERNAL WIRING SEE PAGE 25)

INTERNAL WIRING DIAGRAM	FOR EXTERNAL WIRING SEE: 109433-0001	OPERATOR JST+/RG+ DWG. NO. 109462-0003 REV. B 208-230/460 VOLT. 3 PH

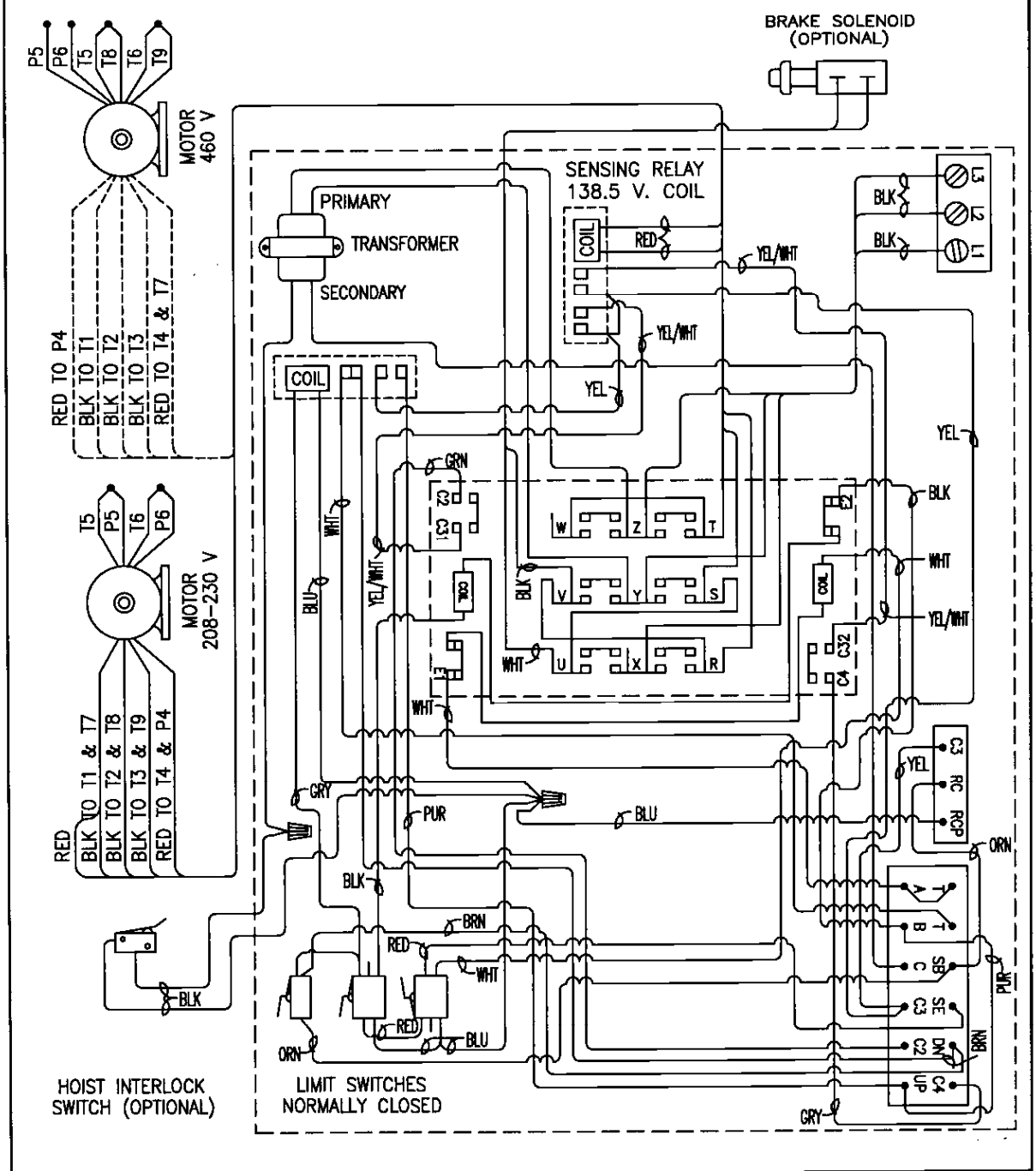

EXTERNAL WIRING DIAGRAM

IF THE DOOR IS TO HAVE MOMENTARY CONTACT CLOSE, A SENSING DEVICE SHOULD BE INSTALLED.

EXTERNAL WIRING DIAGRAM

DWG. NO. 109433-0001 REV. C

FOR PROPER SELECTION OF TYPE C OR TYPE D JACKSHAFT WIRING – SEE ARROW DECAL AT OUTPUT SHAFT. ALSO SEE INSTALLATION INSTRUCTION MANUAL.

TYPE D&DRAWBAR

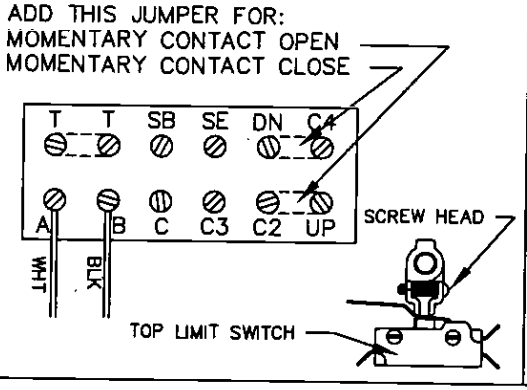

TYPE C

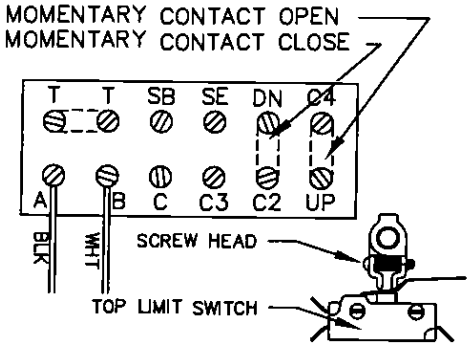

NOTE: ALL RDB+ OPERATORS ARE SHIPPED FROM THE FACTORY WIRED TYPE C. ALL OTHER OPERATORS ARE SHIPPED FROM THE FACTORY WIRED DRAWBAR AND JACKSHAFT TYPE D. TO CHANGE WIRING TYPE SEE BOXES ABOVE AND 1–INTERCHANGE THE BLACK & WHITE WIRES AT TERMINALS A & B & 2–REVERSE TOP LIMIT SWITCH AND CAM. SEE "LIMIT SWITCH ADJUSTMENT INSTRUCTIONS."

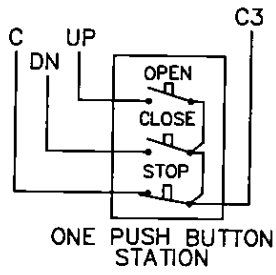

ONE PUSH BUTTON STATION

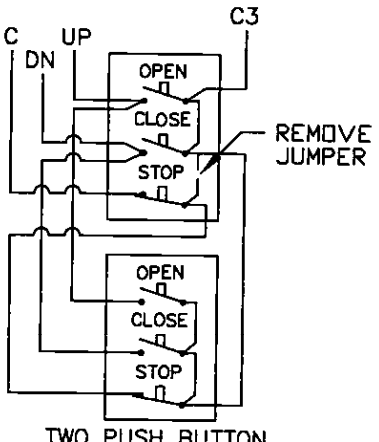

TWO PUSH BUTTON STATIONS

ACCESSORY CONTROL WIRING

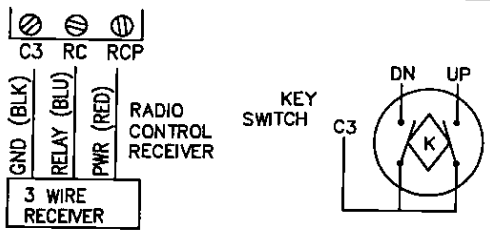

NOTE 1. IF CONTROL IS ONLY BY SINGLE BUTTON AND/OR RADIO CONTROL, JUMPER C TO C3 AND WIRE MOMENTARY OPEN & CLOSE.
2. IF THE STOP BUTTON IS NOT USED, JUMPER TERMINALS C AND C3.

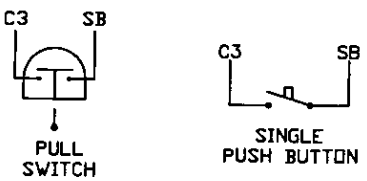

NOTE: ONLY 2 WIRE CORD REQUIRED

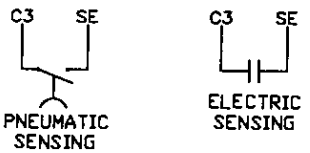

OVERHEAD DOOR®
the original since 1921

Commercial Operator

Illustrated Parts Breakdown

MODEL RG+ PLUS

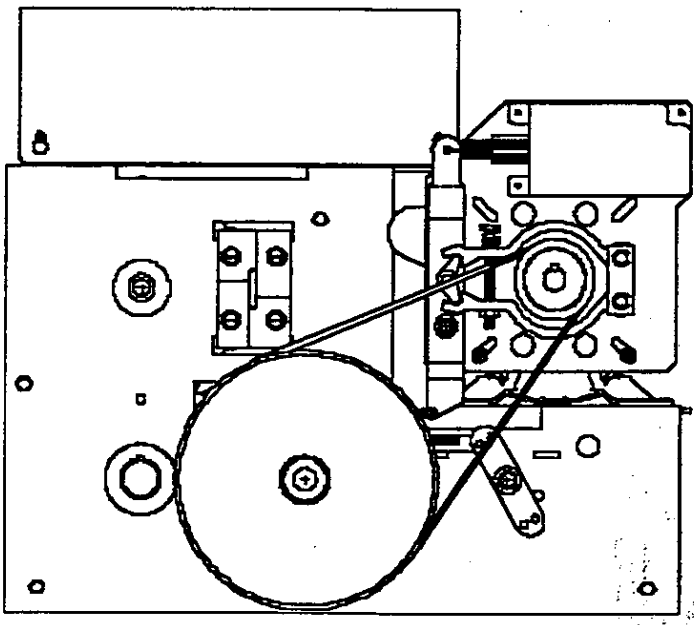

108579-0002

All-American Craftsmanship
Made in U.S.A.

11/22/94

OVERHEAD DOOR®
the original since 1921

MOTOR/BRAKE ASSEMBLY

ITEM NUMBER	PART NUMBER	DESCRIPTION	W / HOIST	W / EASY RELEASE	W / HOIST & EASY RELEASE
			QUANTITY		
1	106663–0001	MOTOR, 1/3 115/230/1 CONT. DUTY OPEN	1		
	106663–0005	MOTOR, 1/2 115/230/1 CONT. DUTY OPEN			
	106663–0007	MOTOR, 1/2 208/230/460/3 CONT. DUTY OPEN			
	106663–0009	MOTOR, 3/4 115/230/1 CONT. DUTY OPEN			
	106663–0017	MOTOR, 3/4 208/230/460/3 CONT. DUTY OPEN			
2	108201–0001	PLATE ASSY., BRAKE	1	1	1
3	106124–0004	WASHER, NYLON .125 X .443	5	5	5
4	106124–0003	WASHER, NYLON .032 X .443	4	4	4
5	080105–0420	BOLT, HH 1/4–20 X 2–1/2	1	1	1
6	080302–2024	WASHER, PLAIN 5/16 X 3/4	1	1	1
7	108243–0001	SPRING, BRAKE	1	1	1
8	107908–0001	BRACKET, REINFORCING	1	1	1
9	080415–0018	RING, RETAINING "E" 7/16"	3	3	3
10	107999–0001	PULLEY, BRAKE DRUM	1	1	1
11	075121–0011	SOLENOID, 115V	1		
	075121–0012	SOLENOID, 208V			
	075121–0013	SOLENOID, 230V			
	075121–0014	SOLENOID, 460V			
12	086575–0606	SCREW, THDF 8-32 X 3/8	2	2	2
13	607558–1006	SCREW, TAP SLT WASH HH TP "B" #6 X 3/8	3	3	3
14	107909–0001	COVER, SOLENOID	1	1	1
15	070069–0001	SPRING, SOLENOID	1	1	1
16	108472–0001	ARM ASSY., BRAKE RELEASE	1	1	1
17	080417–0007	RING, RETAINING EXTERNAL 1/4"	1	1	1
18	107904–0001	CAM, BRAKE RELEASE	2	2	2
19	107887–0001	CLAMP, CABLE SQUEEZE 1/2" NS	1	1	1
20	106124–0005	WASHER, NYLON .08 X .765 I.D.	1	1	1
21	080300–1608	SCREW, SET SOCKET 1/4-20 X 1/2	2	2	2
22	108116–0001	SPRING, BRAKE ARM RETURN	1	1	1
23	107906–0001	SHOE ASSY., BRAKE	2	2	2
24	086501–0011	NUT, ELASTIC STOP 1/4-20	1	1	1
25	601108–0007	NUT, HEX LOCK 10-32	4	4	4
26	080302–1416	WASHER, PLAIN 7/32 X 1/2	4	4	4
27	086420–0510	BOLT, CARRIAGE 5/16-18 X 1-1/4	1		1
	086420–0506	BOLT, CARRIAGE 5/16-18 X 3/4		2	
28	080105–0506	BOLT, HH 5/16-18 X 3/4	1		1
29	108002–0001	PLATE, MOTOR MOUNTING	1	1	1

NS INDICATES PART NOT SHOWN

OVERHEAD DOOR
the original since 1921

MOTOR/BRAKE ASSEMBLY

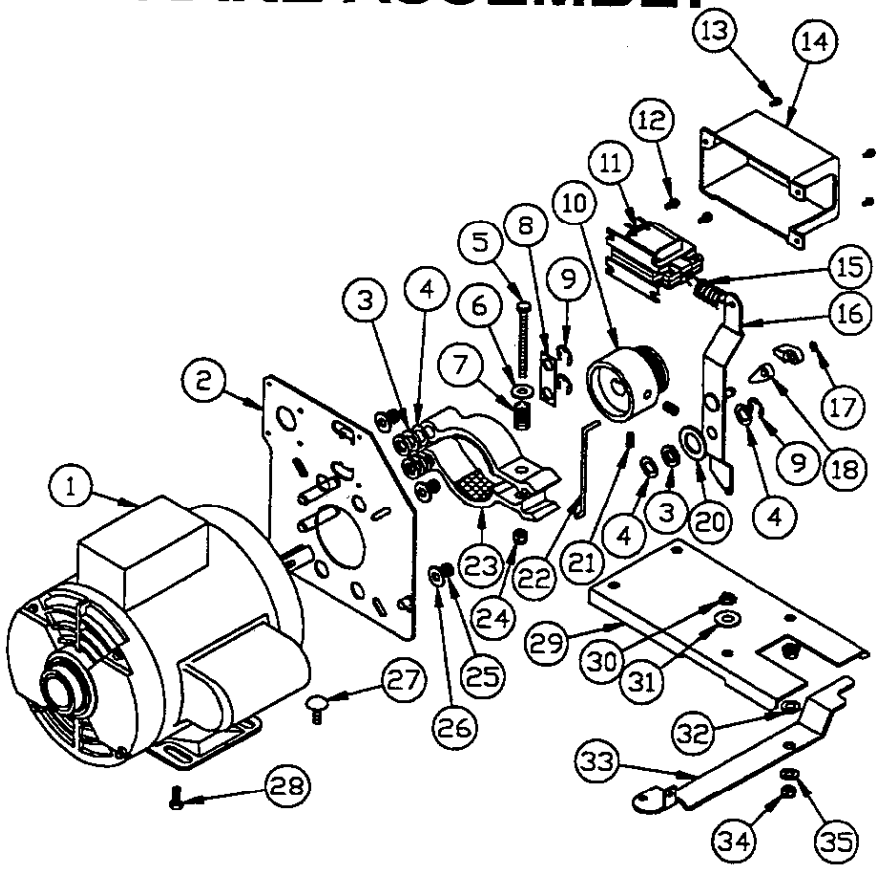

MOTOR/BRAKE ASSEMBLY				W / HOIST	W / EASY RELEASE	W / HOIST & EASY RELEASE
ITEM NUMBER	PART NUMBER	DESCRIPTION		QUANTITY		
30	086480–2018	NUT, KEPS 5/16-18		2	2	2
31	080302–2428	WASHER, PLAIN 3/8 X 7/8		1		1
32	108125–0001	WASHER, FLANGE .320 ID		1		1
33	108182–0001	ARM, HOIST BRAKE RELEASE		1		1
34	601108–0010	NUT, HEX LOCK 5/16-18		1		1
35	106124–0007	WASHER, NYLON .032 X .375 I.D.		1		1
36	109439–0001	HARNESS, MOTOR 1PH SEL+/RG+	NS	1		
	108177–0001	HARNESS, MOTOR 3PH JST	NS			
37	107886–0006	TUBING, FLEXIBLE CONDUIT 8"	NS	1	1	1
38	080610–0001	CONNECTOR, CLOSED 3/4"	NS	8	8	8
39	080618–0001	CLAMP, CABLE 1/2"	NS	1	1	1
40	108170–0001	HARNESS, BRAKE 1PH RG/SEL	NS	1		
	108171–0001	HARNESS, BRAKE 3PH RG/SEL	NS			
41	086689–0004	NUT, WIRE ORANGE	NS	3	3	3
42	086689–0002	NUT, WIRE GRAY	NS	1	1	1

NS INDICATES PART NOT SHOWN

EASY RELEASE ASSEMBLY

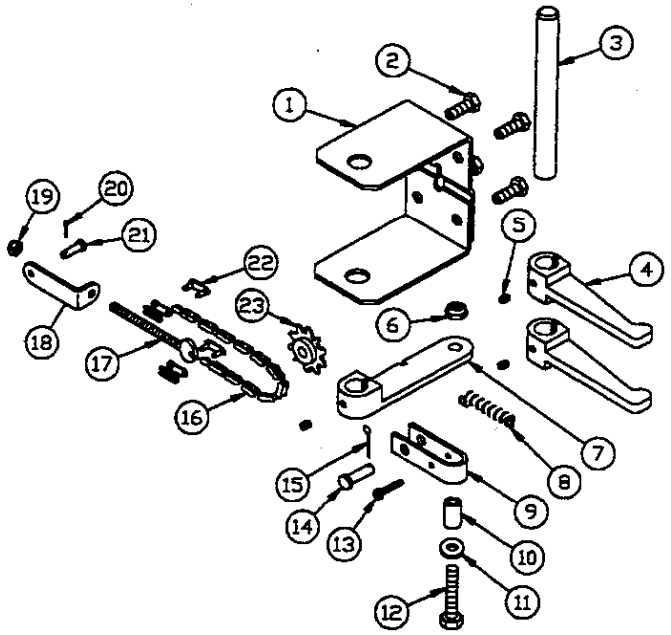

EASY RELEASE ASSEMBLY			
ITEM NUMBER	PART NUMBER	DESCRIPTION	QTY
1	108003–0001	BRACKET, RELEASE EASY EGRESS	2
2	086575–1008	SCREW, THDF 1/4–20 X 1/2	4
3	108129–0001	SHAFT, DENTIL THROWOUT	1
4	107992–0001	CAM, DENTIL–RELEASE	2
5	080300–1604	SCREW, SET SOCKET 1/4–20 X 1/4	3
6	086501–0011	NUT, ELASTIC STOP 1/4–20	1
7	107991–0001	LEVER, CAM ACTIVATOR EZ EGRESS	1
8	108123–0001	SPRING, EGRESS CHAIN TENSION	1
9	075048–0000	CLEVIS, ROLLER CHAIN	1
10	107776–0005	SPACER, NYLON .56 X .460 X .250 I.D.	1
11	080302–1618	WASHER, PLAIN 1/4 X 9/16	1
12	080105–0412	BOLT, HH 1/4–20 X 1–1/2	1
13	086575–0512	SCREW, THDF 6–32 X 3/4	1
14	086621–0412	PIN, CLEVIS 1/4 X 3/4	1
15	107718–0003	PIN, COTTER HAIRPIN 1/4" SHAFT	1
16	086565–0026	CHAIN, ROLLER #25 X 22P	1
17	108124–0001	SCREW, SPADE #10–24 X 2"	1
18	107994–0001	COUPLING, THROW-OUT CHAIN	1
19	601108–0006	NUT, HEX LOCK 10–24	1
20	080401–0212	PIN, COTTER 1/16 X 3/4	1
21	086621–0308	PIN. CLEVIS 3/16 X 1/2	1
22	080884–0007	LINK, CONNECTING #25 CHAIN	1
23	107998–0001	SPROCKET, IDLER 14T 1/4P	1

NS INDICATES PART NOT SHOWN

HOIST ASSEMBLY

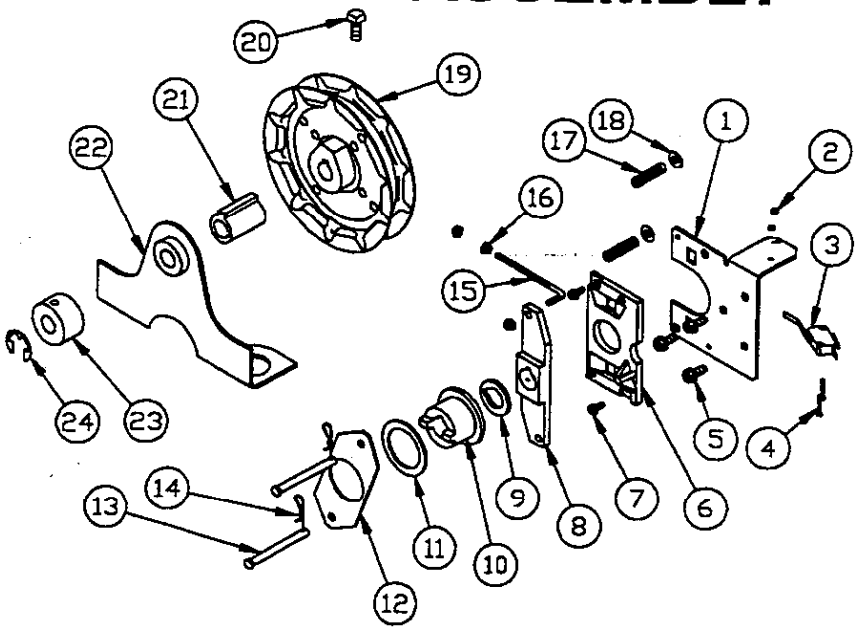

HOIST ASSEMBLY			
ITEM NUMBER	PART NUMBER	DESCRIPTION	QTY
1	108000-0002	PLATE, HOIST/SWITCH	1
2	086480-0840	NUT, KEPS 4-40	2
3	108190-0001	SWITCH, SNAP N.O. INTERLOCK	1
4	080288-0810	SCREW, RHSM 4-40 X 5/8	2
5	086575-1008	SCREW, THDF 1/4-20 X 1/2	3
6	108006-0001	PLATE, HOIST THRUST	1
7	086575-0606	SCREW, THDF 8-32 X 3/8	2
8	108007-0001	LEVER, HOIST SHIFT	1
9	108136-0001	WASHER, NYLON HOIST	1
10	107993-0001	HOIST, DENTIL	1
11	106124-0006	WASHER, NYLON .060 X 1.525	1
12	107995-0001	PLATE, DENTIL HOIST	1
13	086621-0444	PIN, CLEVIS 1/4 X 2-3/4	2
14	107718-0003	PIN, COTTER HAIRPIN 1/4" SHAFT	2
15	108191-0002	LINKAGE, HOIST/BRAKE RG	1
16	601108-0005	NUT, HEX LOCK 8-32	3
17	105964-0001	SPRING, LEVER RETURN	2
18	080302-1618	WASHER, PLAIN 1/4 X 9/16	2
19	607396-0000	HANDWHEEL ASSY., W/O SET SCREWS	1
20	080299-2414	SCREW, SET SQ HD 3/8-16 X 7/8	1
21	087062-0002	BUSHING, HANDWHEEL W/KEYWAY	1
22	607399-0063	GUARD ASSY., CHAIN 5/8" BUSHING	1
23	070036-0000	COLLAR, CHAIN GUARD .640 I.D.	1
24	080415-0021	RING, RETAINING "E" 5/8	1
25	108137-0001	HARNESS, HOIST INTERLOCK NS	1

NS INDICATES PART NOT SHOWN

OVERHEAD DOOR®
the original since 1921

FRAME ASSEMBLY

ITEM NUMBER	PART NUMBER	DESCRIPTION	W / HOIST	W / EASY RELEASE	W / HOIST & EASY RELEASE
			QUANTITY		
1	108192–0003	PLATE, FRAME RG LEFT	1	1	1
2	108194–0001	SPACER, FRAME	3	3	3
3	086168–0005	BUSHING, SNAP 5/16	1		1
4	080626–0001	CLAMP, PLASTIC 3/8	1		1
5	086575–0606	SCREW, THDF 8–32 X 3/8	1		1
6	108192–0004	PLATE, FRAME RG RIGHT	1	1	1
7	080302–2024	WASHER, PLAIN 5/16 X 3/4	2	2	2
8	109467–0001	CLAMP, BEARING NS	2	4	2
9	080415–0021	RING, RETAINING "E" 5/8	1		1
10	086649–0030	WASHER, THRUST .765	4	4	4
11	080415–0023	RING, RETAINING "E" 3/4"	2	3	3
12	080105–0405	BOLT, HH 1/4–20 X 5/8	6	6	6
13	080701–0002	BEARING, BALL 1.001 ID	2	2	2
14	080300–1604	SCREW, SET SOCKET 1/4–20 X 1/4	10	10	10
15	604297–4100	COLLAR, SET 1" ID X 1–5/8" O.D.	2	2	2
16	108021–0001	PULLEY/CLUTCH 7.25"	1	1	1
17	108135–0002	BELT, POLY–V TYPE "J" 32"	1	1	1
18	075197–0000	SPRING, CLUTCH	1	1	1
19	080302–4242	WASHER, PLAIN 5/8 X 1-5/16 OD	2	2	2
20	080358–1011	NUT, HEX JAM 5/8–11	2	2	2
21	080412–1020	PIN, SLOTTED 5/32 X 1–1/4	3	3	3
22	086420–0468	BOLT, CARRIAGE 1/4–20 X 8–1/2	2	2	2
23	108184–0001	SPROCKET ASSY., 36T 3/8P 1" BORE	1	1	1
24	080302–5248	WASHER, PLAIN 13/16 X 1–1/2	1	2	2
25	108122–0001	SPRING, DENTIL		1	1
26	107997–0001	HUB, DENTIL		1	1
27	108264–0001	SPROCKET ASSY, DENTIL W/PINS		1	1
	108185–0001	SPROCKET, 36T 3/8P 3/4"B W/KEYWAY	1		
28	080417–0026	RING, RETAINING EXTERNAL 3/4"		2	2
29	080884–0008	LINK, CONNECTING #35 CHAIN	2	2	2
30	080837–0531	CHAIN, ROLLER #35 X 53P	2	2	2
31	077233–0000	SHAFT, OUTPUT	1	1	1
32	080340–0016	KEY, STD. SQ 1/4 X 1–1/2	1	1	1
33	080341–0019	KEY, WOODRUFF 3/16 X 7/8	2	1	2
34	107803–0001	SPROCKET, 25T 1/4P 1.38 HUB	1	1	1
35	086565–1029	CHAIN, ROLLER #25 52P LOOP	1	1	1
36	108131–0001	WELDMENT, DISENGAGE SHAFT		1	1
	108134–0001	WELDMENT, INTERMEDIATE SHAFT	1		
37	086563–0005	SPROCKET, 18T 1/4P X 1/2 #25	1	1	1
38	108175–0002	SHAFT, CLUTCH RG W/RELEASE		1	
	108178–0002	SHAFT, CLUTCH W/HOIST JST	1		1
39	086480–1620	NUT, KEPS 1/4–20	12	13	13
40	109172–0408	BOLT, HH TAP FULL THREAD 1/4-20 X 1		1	1
41	108193–0001	SPACER, MOTOR SUPPORT	1	1	1
42	086420–0506	BOLT, CARRIAGE 5/16–18 X 3/4	2	2	2
43	080302–2428	WASHER, PLAIN 3/8 X 7/8	2	2	2
44	086480–2018	NUT, KEPS 5/16–18	2	2	2
45	108127–0001	SHAFT, EASY EGRESS		1	1
46	072018–0000	BUSHING, 1/2" ID		2	2
47	108016–0001	LEVER, EASY EGRESS		2	2
48	109466–0001	BEARING, BALL SLTD 5/8 X 1-3/4	2	2	2
49	080701–0018	BEARING, BALL 5/8 X 1-3/4	2	2	2
51	080208–1308	SCREW, HH B #10 X 1/2" NS	2	4	2
52	109460–0001	INSTRUCTION, INSTALL RG+ OPER NS	1	1	1

NS INDICATES PART NOT SHOWN

FRAME ASSEMBLY

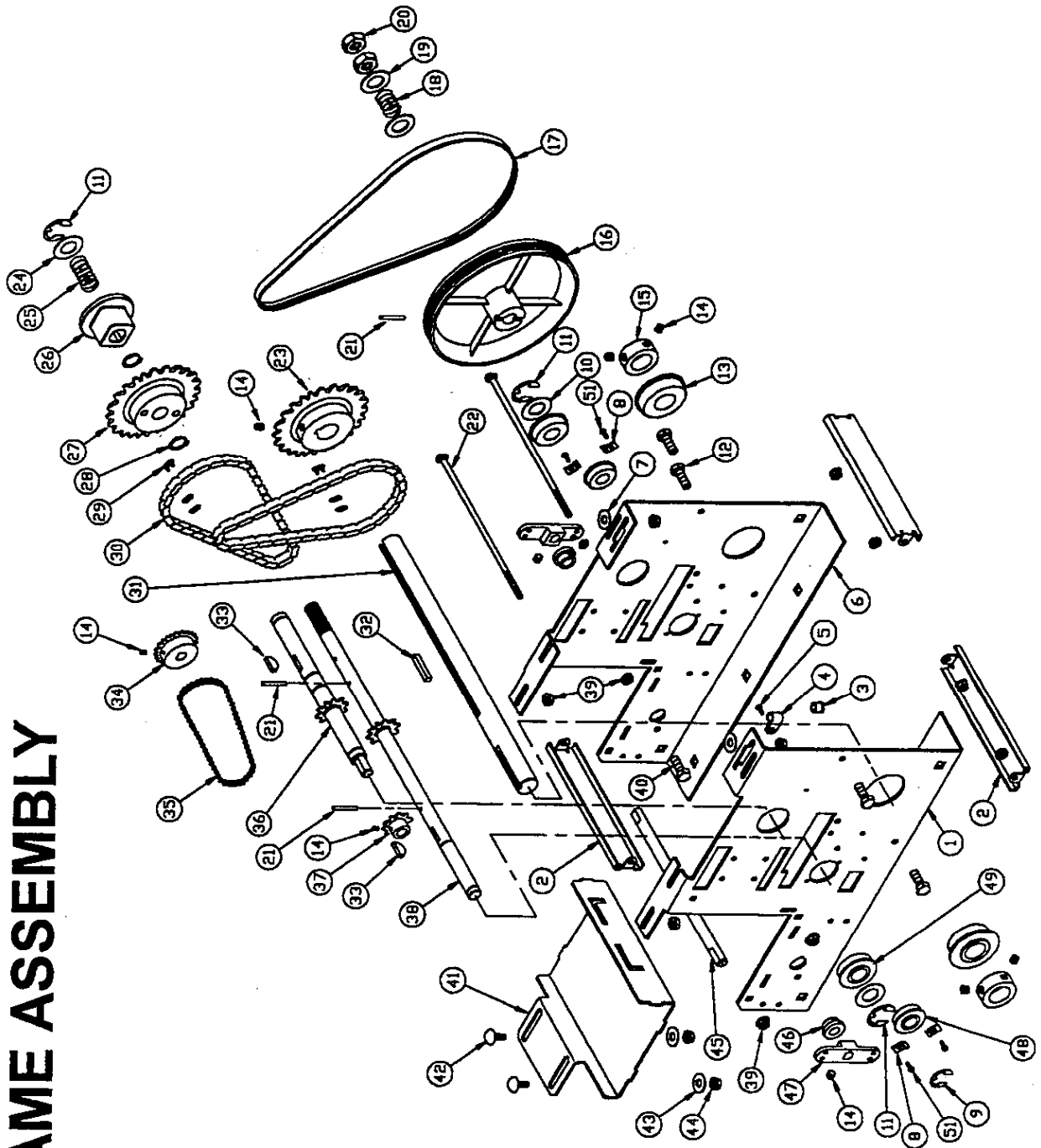

KITS/MISC.		W/ HOIST	W/ EASY RELEASE	W/ HOIST & EASY RELEASE
PART NUMBER	DESCRIPTION	QUANTITY		
106647–0001	PUSHBUTTON, OPEN/CLOSE/STOP	1	1	1
108268–0001	KIT, RG COUPLING HARDWARE	1	1	1

OPTIONS	
PART NUMBER	DESCRIPTION
108252–0001	KIT, CLUTCH RG
108247–0001	LEVER ASSY, EGRESS 10 FT
108247–0002	LEVER ASSY, EGRESS 15 FT
MOUNTING BRACKETS	
307342–0001	BRACKET, OPER, TOP MOUNT, MED. DTY
307342–0002	BRACKET, OPER, FRONT MNT, MED. DTY
307346–0004	BRKT, WALL MNT, RD OPER, SET OF 4
102021–0001	BRACKET, MTG WALL MT&FOH ABOVE SHFT
307341–0001	BRACKET, OPER, TOP MOUNT, SERV. DR.
307341–0002	BRACKET, OPER, FRONT MNT, SERV. DR.
307344–0001	BRACKET, BENCH MOUNT, RG OPER, RH
307344–0002	BRACKET, BENCH MOUNT, RG OPER, LH

PARTS SUPPLIED BY DOOR PLANT FOR SIZE DOOR USED

OPERATOR SPROCKET
DOOR SPROCKET
DRIVE CHAIN

HAND CHAIN - WHERE USED
RELEASE CABLE - WHERE USED
ENGAGE CABLE - WHERE USED

LIMIT SWITCH ASSEMBLY			109441-0001
ITEM NUMBER	PART NUMBER	DESCRIPTION	QTY
1	107861–0002	BASE, LIMIT SWITCH	2
2	107859–0001	BUSHING, LIMIT SWITCH .31 ID	1
3	107881–0001	GEAR ASSY., WORM	1
4	109204–1040	SCREW, RHSM 6-32 X 2-1/2	2
5	080415–0017	RING, RETAINING "E" 3/8	1
6	107860–0001	PLATE, END LIMIT SWITCH	2
7	106124–0007	WASHER, NYLON .032 X .375	2
8	080300–1604	SCREW, SET 1/4-20 X 1/4	1
9	604297–3037	COLLAR, SET 3/8 ID X 3/4 OD	1
10	086480–1032	NUT, KEPS 6-32	10
11	109435–0001	SWITCH, LIMIT SPDT	1
12	080288–1020	SCREW, RHMS 6-32 X 1-1/4	4
13	108921–0001	KEEPER, LIMIT SWITCH	1
14	075077–0000	CAM, LIMIT SWITCH .166	3
15	075117–0000	SPRING, LIMIT SWITCH CAM	3
16	080288–1012	SCREW, RHSM 6-32 X 3/4	3
17	075076–0000	CAM, LIMIT SWITCH 6/32	3
18	080300–1304	SCREW, SET SOCKET 10-24 X 1/4	3
19	106124–0003	WASHER, NYLON .032 X .443	2
20	107858–0001	BUSHING, LIMIT SWITCH 3/8 ID	1
21	107880–0004	WORM, LIMIT SWITCH	1
22	105808–0001	CAM ASSY (COMPLETE)	
23	109436–0001	SWITCH, LIMIT DPST	2
24	108551–2035	WIRE ASSY, #18 X 3-1/2" RED 2-1/4D NS	1
25	109438–8000	WIRE ASSY, #18 X 7"-12" GRA NS	1

NS INDICATES PART NOT SHOWN

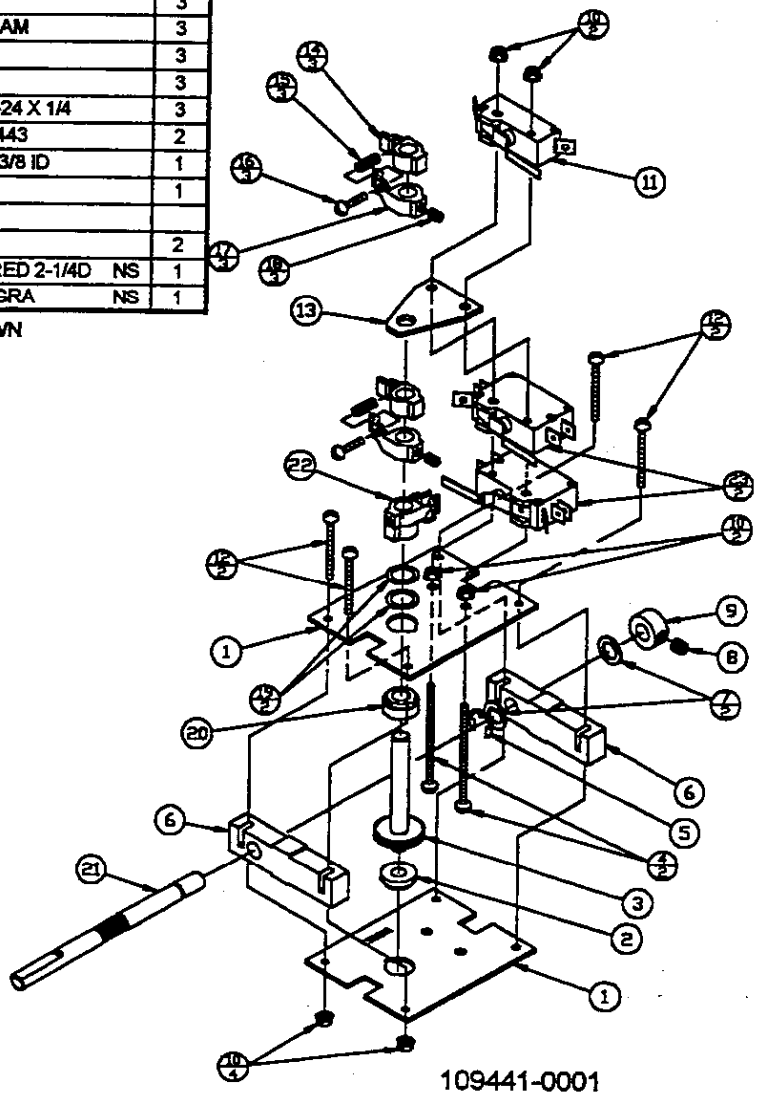

109441-0001

ELECTRIC BOX ASSEMBLY

ITEM NUMBER	PART NUMBER	DESCRIPTION		115V - 1PH	230V - 1PH	208V - 3PH	230V - 3PH	460V - 3PH
				QUANTITY				
1	107865–0003	BOX, ELECTRICAL COMMERCIAL		1	1	1	1	1
2	080288–1006	SCREW, RHSM 6-32 X 3/8		1	1	2	2	2
3	607558–1006	SCREW, TAP SLT WASH HH TP		14	14	15	15	15
4	080019–0001	BOLT, TRACK 1/4-20 X 9/16		4	4	4	4	4
5	109429–0001	RELAY, 24 VAC FLANGE MNT.		1	1	1	1	1
6	076803–0003	CONTACTOR, RVSG 24 VAC COMM		1	1	1	1	1
7	086480–1032	NUT, KEPS 6-32		5	5	6	6	6
8	075124–0006	TRANSFORMER, 115/28 30VA		1				
	075124–0007	TRANSFORMER, 208/28 30VA				1		
	075124–0008	TRANSFORMER, 230/28 30VA			1		1	
	075124–0009	TRANSFORMER, 460/28 30VA						1
9	107863–0003	COVER, ELECTRIC BOX		1	1	1	1	1
10	108391–0001	TERMINAL ASSY., POWER 115/1		1				
	108391–0002	TERMINAL ASSY., POWER 208/3				1		
	108391–0003	TERMINAL ASSY., POWER 230/1			1			
	108391–0004	TERMINAL ASSY., POWER 230/3					1	
	108391–0005	TERMINAL ASSY., POWER 460/3						1
11	109430–0001	STRIP, TERMINAL 12 LUG		1	1	1	1	1
12	605875–0001	SCREW, HEX WASHER HEAD 6 X 3/8		2	2	2	2	2
13	107862–0001	BRACKET, TERMINAL BOARD		1	1	1	1	1
14	109441–0001	SWITCH ASSY., LIMIT S/J/R		1	1	1	1	1
15	605476–0002	CLIP, WIRE MOUNT		3	3	3	3	3
16	109428–0001	STRIP, TERMINAL 3 LUG		1	1	1	1	1
17	107688–0001	WASHER, CUP		1	1	1	1	1
18	107442–0002	SCREW, THDF GREEN GROUNDING		1	1	1	1	1
19	077151–0024	RELAY, 138.5 VAC DPDT				1	1	1
20	072101–0000	JUMPER, REVERSING CONTACTOR	NS	1	1			
21	072102–0002	JUMPER, REVERSING CONTACTOR	NS	2	2	3	3	3
23	080618–0001	CLAMP, CABLE 1/2"	NS	1	1	1	1	1
24	107887–0001	CLAMP, CABLE SQUEEZE 1/2"	NS	1	1	1	1	1
25	109431–0001	HARNESS, CONTROL SEL+/JST+/RG+	NS	1	1	1	1	1
26	108560–6065	WIRE ASSY., #18 6.5" BLUE	NS	1	1	1	1	1
27	108551–0070	WIRE ASSY., #18 7" YEL/WHT.	NS			2	2	2
28	109437–0001	DECAL, RADIO CONTROL	NS	1	1	1	1	1
29	109433–0001	DECAL, WIRING DIA. EXTERNAL	NS	1	1	1	1	1
30	108573–0090	WIRE ASSY., #18 9" BLK.	NS	1	1	1	1	1
31	108573–9075	WIRE ASSY., #18 7.5" WHT.	NS	1	1	1	1	1
32	072225–0001	STRAP, JUMPER COMM.	NS	4	4	4	4	4
33	109432–0001	HARNESS, L/S SEL+/JST+/RG+	NS	1	1	1	1	1

NS INDICATES PART NOT SHOWN

ELECTRICAL BOX

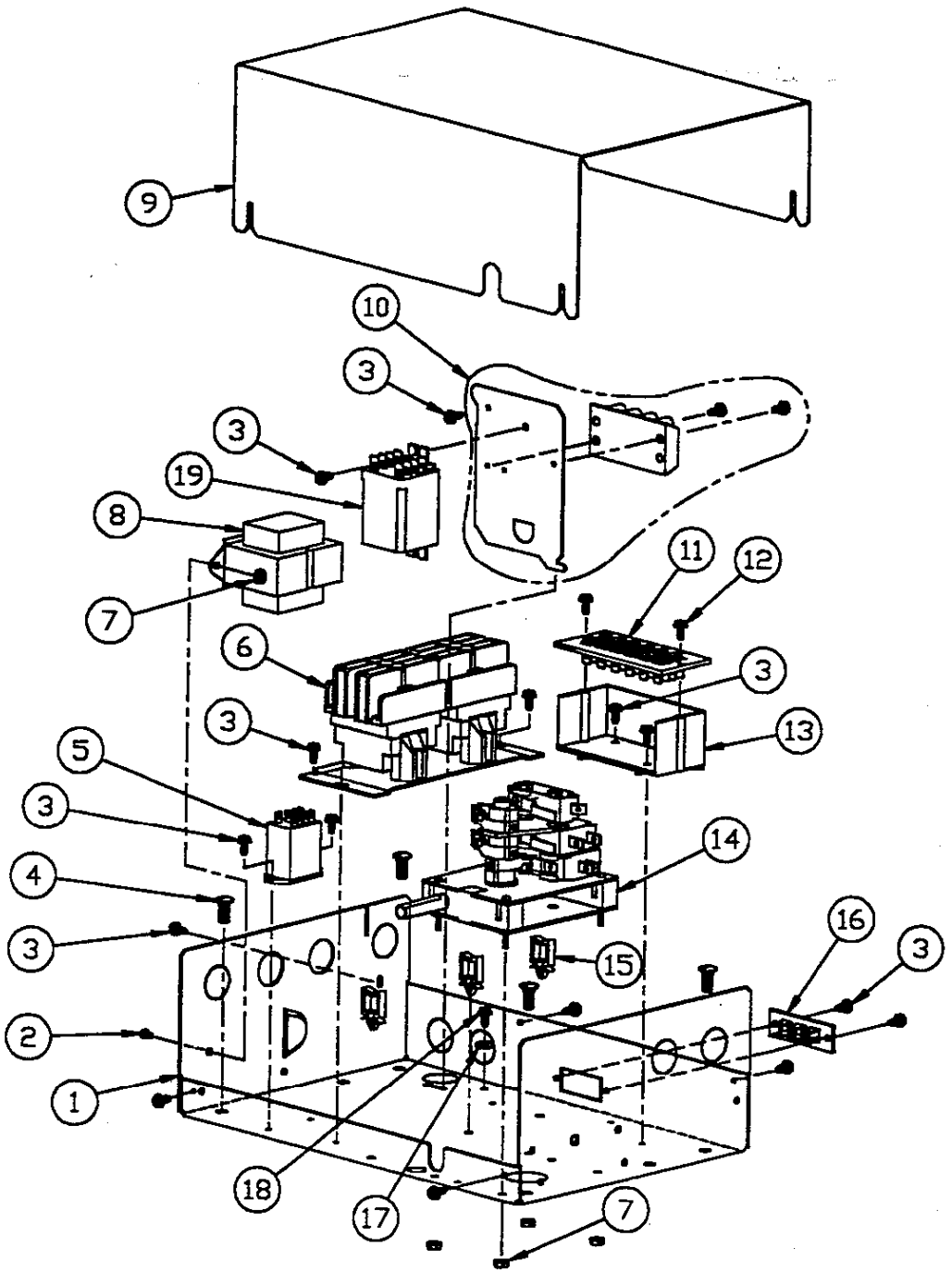

COUNTRY LANE 2.0 MG
ELEVATED STORAGE TANK

CITY OF ROCKWALL, TEXAS

SPECIFICATION SECTION: TS1

OPERATIONS & MAINTENANCE MANUAL

SUMP PUMP

SUPPLIER / SUBCONTRACTOR

PUMPS UNLIMITED, INC.
CONTACT: RANDY KEY
8204 NORTHEAST PARKWAY, SUITE 101
NORTH RICHLAND HILLS, TEXAS 76180
(817) 656-8478

GENERAL CONTRACTOR

LANDMARK STRUCTURES I, LP
1665 HARMON ROAD
FORT WORTH, TEXAS 76177
(817) 439-8888

HYDROMATIC®

SPD50H/100H

Submersible Effluent Pump

- Septic Tank Effluent
- High-Capacity Sump
- High-Head Dewatering

SPD100H Shown

Pentair Water™

SPD50H/100H - Submersible Effluent Pump

FEATURES

The Hydromatic SPD50H/100H submersible pumps are specifically designed to meet the demands of septic tank effluent applications that require a “high-head”, dual-seal pump. The SPD50H has a powerful 1/2 horsepower motor, while the SPD100H comes with a 1 horsepower motor. Both pumps are standard 2 inch NPT discharge pumps, with 3 inch versions optional, and available in automatic and manual configurations. The SPD50H can handle capacities up to 110 gallons per minute and heads to 50 feet, while the SPD100H handles capacities up to 140 gallons per minute and heads to 63 feet.

These pumps feature a high-quality cast iron pump volute, motor housing and seal housing construction that help to ensure a long service life. The pump’s non-clogging, two-vane, cast iron impeller, which is threaded to a stainless steel shaft, is capable of handling up to 3/4 inch spherical solids – providing long life in demanding applications. A seal-failure sensor probe (for connection to a seal failure alarm) is standard on three-phase units and available as an option on single-phase models. Two carbon- and ceramic-faced mechanical shaft seals are mounted in tandem to provide double protection against water entry for a long, leakproof life.

The SPD50H/100H’s oil-filled motor provides superior cooling characteristics, allowing the motor to run cool and quiet for years. This oil-filled design also provides permanent lubrication of the shaft bearings, minimizing maintenance and extending the service life of the pump. In addition, to protect against overheating, the motor windings contain an automatic reset thermal overload protection located in the accessory control panel.

Automatic models (1/2 HP) feature the exclusive Hydromatic diaphragm pressure switch, which provides proven reliability in installations where a float might hang up. It also incorporates a unique piggyback plug arrangement, which allows for simple conversion to manual operation by simply removing the switch plug and inserting the motor plug directly into the electrical outlet.

SPD100H Shown

SPD50H Shown

HYDROMATIC®
Pentair Water

SPD50H/100H - Submersible Effluent Pump

BENEFITS

The SPD50H/100H are completely submersible, “high-head”, dual-seal pumps for use in septic tank effluent applications.

Automatic models (1/2 HP) feature the exclusive Hydromatic diaphragm pressure switch with piggyback plug-in arrangement. Proven reliability for automatic operation in installations where a float might hang up. Switch is easily serviced and may be disconnected for manual operation.

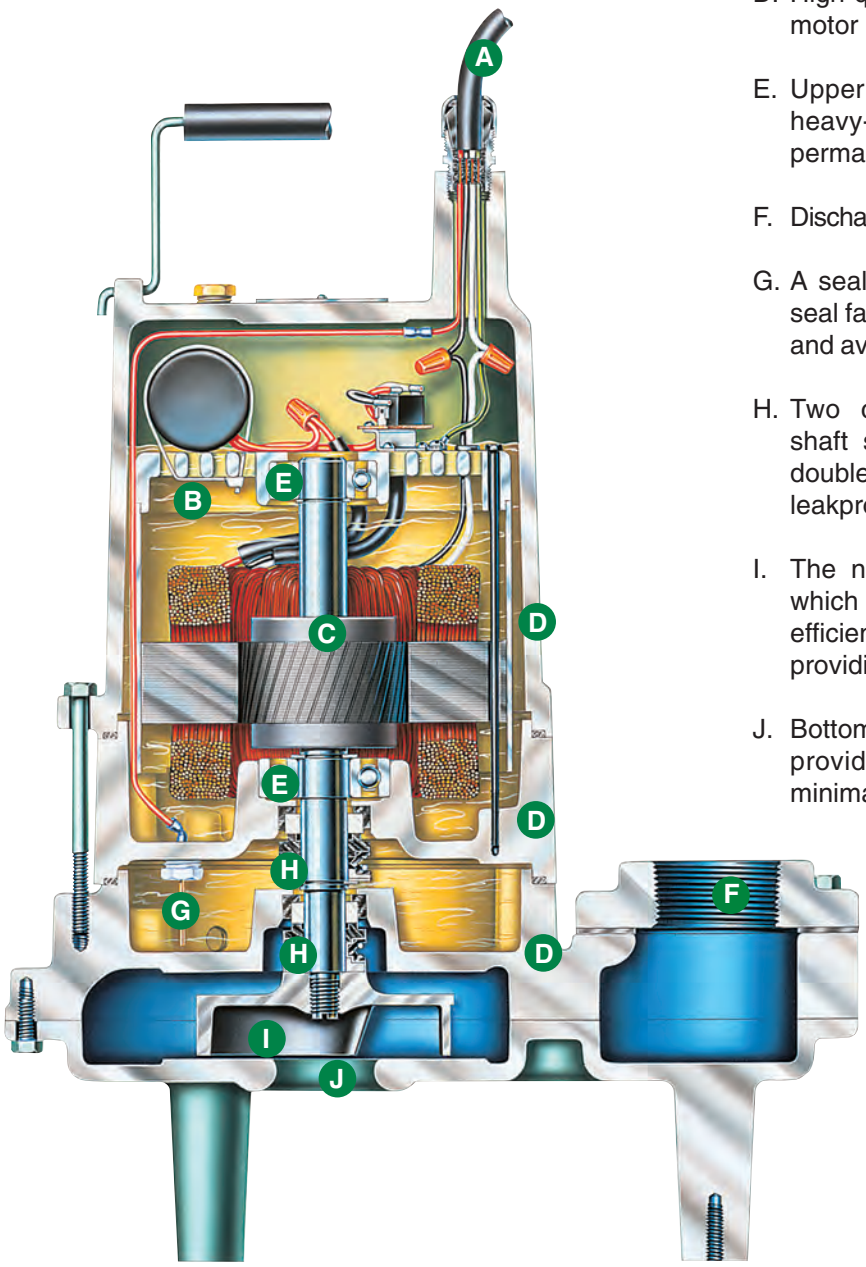

A. Water-resistant power cord has a compression-fit connection and an epoxy potting for double protection against water entry. Lengths of 10 and 20 feet are available with molded plugs, depending on model variations.

B. Oil-filled motor provides superior cooling and permanent lubrication of bearings, minimizing maintenance and extending service life.

C. 1/2 or 1 HP capacitor-start motors provide maximum starting torque. Motor windings contain automatic thermal overload protection (1ø).

D. High-quality cast iron construction of pump volute, motor housing and seal housing provides long life.

E. Upper radial- and lower thrust bearings are heavy-duty, single-row ball bearings that are permanently lubricated for service-free life.

F. Discharge is standard 2 inch NPT (3 inch is optional).

G. A seal failure sensor probe (for connection to a seal failure alarm) is standard on three-phase units and available as an option on single-phase models.

H. Two carbon- and ceramic-faced mechanical shaft seals are mounted in tandem to provide double protection against water entry for a long, leakproof life.

I. The non-clogging, two-vane, cast iron impeller, which is threaded to a stainless steel shaft, efficiently handles up to 3/4 inch spherical solids – providing long life in demanding applications.

J. Bottom inlet has no screen to become clogged, providing optimum pump performance and minimal maintenance.

HYDROMATIC®
Pentair Water

SPD50H/~~100H~~ - Submersible Effluent Pump

Details

Pump Characteristics

Pump/Motor Unit	Submersible				
Manual Models (50)	MH1	MH2	MH6	MH4	MH5
Automatic Models	AH1	AH2	-	-	-
Horsepower	1/2				
Full Load Amps	14.0	7.0	4.0	1.8	1.5
Motor Type	Capacitor Start		Three-Phase		
R.P.M.	3450				
Phase Ø	1		3		
Voltage	115	230	200	460	575
Manual Models (100)	MH2	MH6	MH3	MH4	M5
Automatic Models	AH2	-	-	-	-
Horsepower	1				
Full Load Amps	9.9	5.5	5.2	2.5	1.5
Motor Type	Cap.	Three-Phase			
R.P.M.	3450				
Phase Ø	1	3			
Voltage	230	200	230	460	575
Hertz	60				
Operation	Intermittent				
Temperature	140°F Max Fluid Temp.				
NEMA Design	B				
Insulation	Class B				
Discharge Size	2" NPT (3" opt.)				
Solids Handling	3/4"				
Unit Weight	73 lbs.				
Power Cord: SPD50H 14/3, SJTW-A, 1ø, 115V=10′ std. (20′ opt.)-14/4, STW-A, 1ø, 115V=10′ (20′ opt.)-16/3, STW-A, 1ø, 230V=20′ std.-16/4, STW-A, 1ø, 230V=20′ std. SPD100H 16/3, STW-A, 1ø, 230V=20′ std.-16/4, STW-A, 1ø, 230V=20′ std.-18/5, STW-A, 3ø, 200V, 230V, 460V or 575V=20′ std.					

Materials of Construction

Handle	Steel
Lubricating Oil	Dielectric Oil
Motor Housing	Cast Iron
Seal Housing	Cast Iron
Pump Casing	Cast Iron
Shaft	Stainless Steel
Mechanical Shaft Seal	Seal Faces: Carbon/Ceramic Seal Body: Brass Spring: Stainless Steel Bellows: Buna-N
Impeller	Cast Iron
Upper Bearing	Single Row Ball Bearing
Lower Bearing	Single Row Ball Bearing
Base	Cast Iron
Fasteners	Stainless Steel

Performance Data

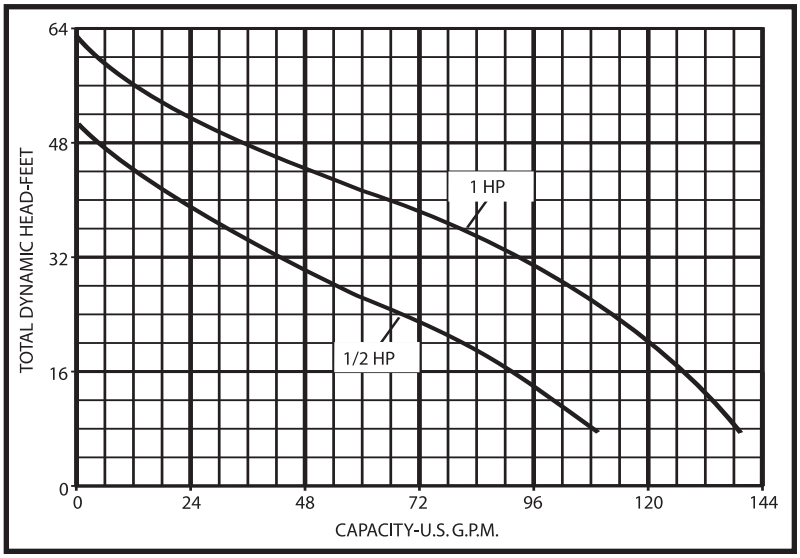

Dimensional Data

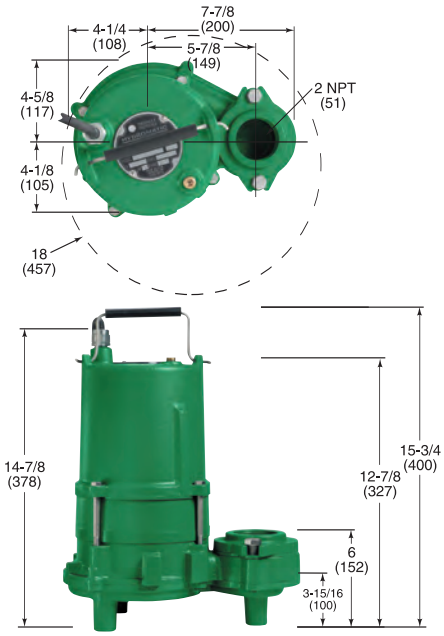

All dimensions in inches. Metric for international use. Component dimensions may vary ± 1/8 inch. Dimensional data not for construction purpose unless certified. Dimensions and weights are approximate. On/Off level adjustable. We reserve the right to make revisions to our product and their specifications without notice.

HYDROMATIC®
Pentair Water

SSPMA Certified PUMP

– Your Authorized Local Distributor –

USA
740 East 9th Street Ashland, Ohio 44805
Tel: 419-289-3042 Fax: 419-281-4087

www.hydromatic.com

CANADA
269 Trillium Drive Kitchener, Ontario, Canada N2G 4W5
Tel: 519-896-2163 Fax: 519-896-6337

© 2005 Hydromatic® Ashland, Ohio. All Rights Reserved.

Item # W-02-6130 2.5M 3/05

Performance Data — SPD50H/100H

RPM: **3450** Discharge: **2"** Solids: **3/4"**

Section: Performance Data
Dated: April 2002
Supersedes: January 2001

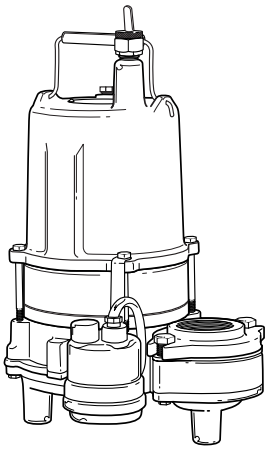

SPD50H

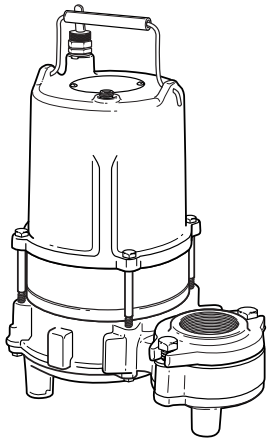

SPD100H

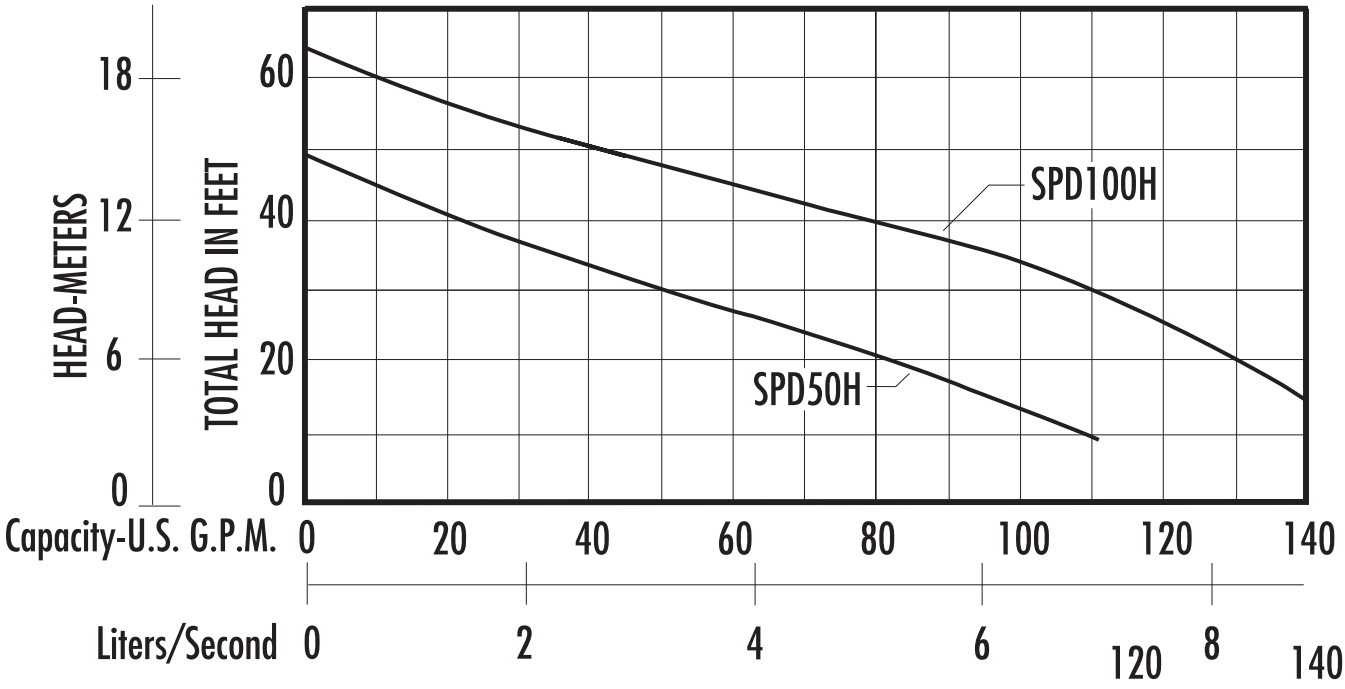

The curves reflect maximum performance characteristics without exceeding full load (Nameplate) horsepower. All pumps have a service factor of 1.2. Operation is recommended in the bounded area with operational point within the curve limit. Performance curves are based on actual tests with clear water at 70° F. and 1280 feet site elevation.

Conditions of Service:

GPM: 35 **TDH**: 38

HYDROMATIC®

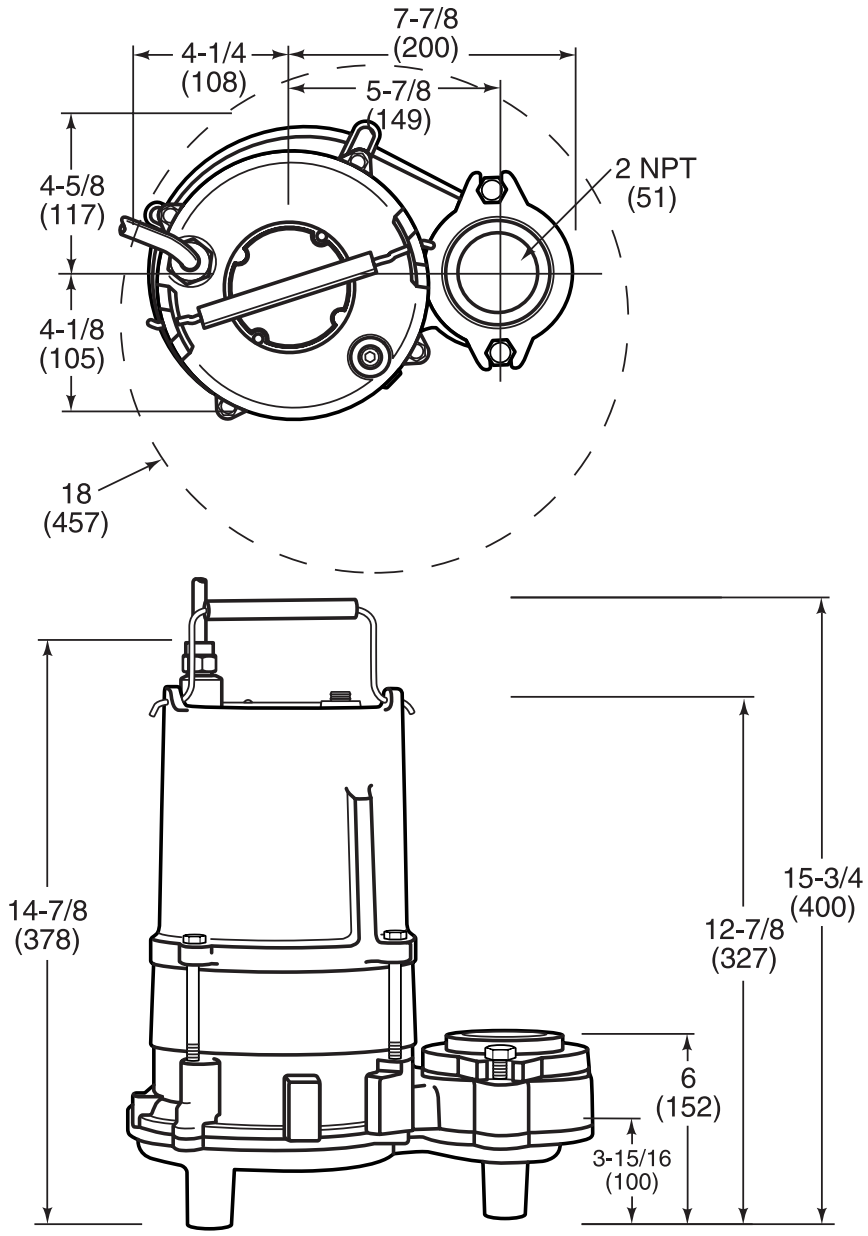

All dimensions in inches. Metric for international use. Component dimensions may vary ± 1/8 inch. Dimensional data not for construction purpose unless certified. Dimensions and weights are approximate. On/Off level adjustable. We reserve the right to make revisions to our product (s) and the product (s) specifications without notice.

MODEL: SPD50H, Effluent Pump

R.P.M.	3450
MOTOR TYPE	OIL FILLED WITH AUTOMATIC RESET OVERLOAD
MOTOR PROTECTION	THERMAL OVERLOAD WITH AUTOMATIC RESET

HP	VOLTAGE	PHASE	NEC CODE	SERVICE FACTOR	FULL LOAD AMPS
1/2	115	1	-	1	14
1/2	230	1	-	1	7
1/2	200	3	-	1	3.6
1/2	230	3	-	1	3.5
1/2	460	3	-	1	1.8
1/2	575	3	-	1	1.9

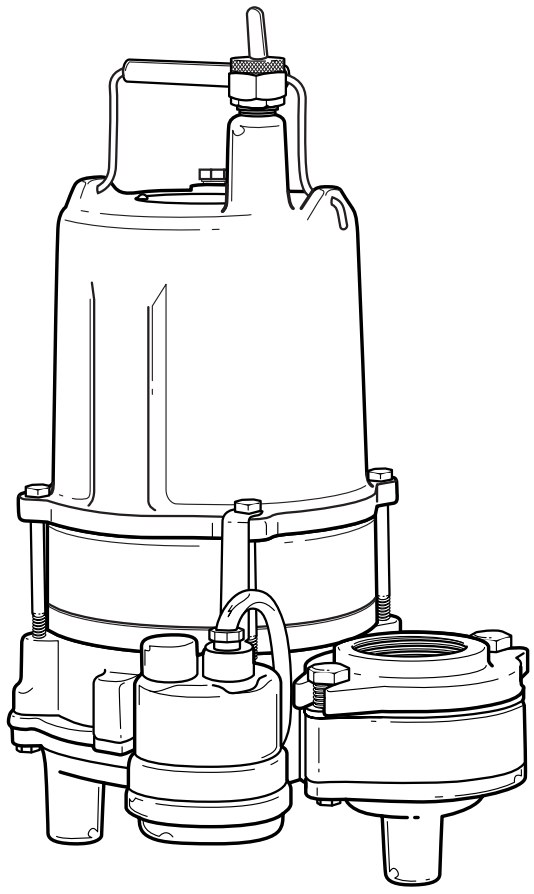

MODEL: SPD50H, Effluent Pump

Physical Data:

DISCHARGE SIZE	2" NPT (STANDARD) 3" NPT (OPTIONAL)
SOLIDS SIZE	3/4"
IMPELLER TYPE	2 VANE NON CLOG
CABLE LENGTH	10' STANDARD 20' OPTIONAL
PAINT	PAINTED AFTER ASSEMBLY, DARK GREEN, WATER REDUCIBLE ENAMEL, ONE COAT, AIR DRIED.

Temperature:

MAXIMUM LIQUID	140°F
MAXIMUM STATOR	
OIL FLASH POINT	

Technical Data:

POWER CORD TYPE		SJTW, STW-A
MATERIALS OF CONSTRUCTION	MOTOR HOUSING	CAST IRON
	CASING	CAST IRON
	IMPELLER	CAST IRON
	MOTOR SHAFT	
	HARDWARE	STAINLESS STEEL
	"O" RINGS	
MECHANICAL SEALS Standard:		CARBON / CERAMIC
UPPER BEARING		BALL
LOWER BEARING		BALL

SUBMERSIBLE HIGH HEAD, DOUBLE SEAL MODELS: SPD50H and SPD100H

1.01 **GENERAL**

Contractor shall furnish all labor, materials, equipment and incidentals required to provide _____ (Qty.) submersible centrifugal high head double seal effluent pump(s) as specified herein. The pump models covered in this specification are the SPD50H and SPD100H. The pump furnished for this application shall be MODEL _____ as manufactured by Hydromatic Pumps.

2.02 **DESIGN CONDITIONS**

Each pump shall be rated _____ H.P., _____ volts, _____ phase, _____ hertz and operate at _____ RPM.

3.01 **OPERATING CONDITIONS**

The pump shall deliver _____ U.S. GPM/LPS at _____ feet/meters TDH, and handle a ____ inch solid. The curve submitted for approval shall state, in addition to head and capacity performance, solid handling capability, amp rating, and design impeller diameter.

4.01 **CONSTRUCTION**

Each pump shall be of the sealed submersible type, incorporating features normally found in pumps furnished for the residential market.

These features include:

1. The pump volute, motor, and seal housing shall be high quality gray cast iron, ASTM A-48, Class 30.
2. The pump inlet shall be open and clear, without screening to provide access for effluent and septic tank solids.
3. All external mating parts shall be machined and Buna N, O-Ring sealed.
4. All fasteners exposed to the pumped liquid shall be 300 series stainless steel.
5. All power cords shall be water resistant UL or CSA approved, with double insulation, and sized as a function of Amp. draw.

5.01 **MOTOR AND SHAFT**

The stator, rotor and bearings shall be mounted in a sealed submersible type housing. Single phase motors shall be split phase with solid state switch and start capacitor. Three phase motors shall be Polyphase. Full Load and Locked Rotor Amps as well as Start and Run winding resistance shall be tabulated for each pump.

6.01 **BEARINGS AND SHAFT**

A thrust bearing shall be required. It shall be heavy duty single row ball bearings which are permanently and continuously lubricated and cooled by the dielectric oil which fills the motor housing. The motor shaft shall be stainless steel and sealed from the pumped liquid with a carbon ceramic mechanical seal.

7.01 **SEALS AND SENSORS**

The rotor and stator in the motor housing shall be separated and protected from the pumped liquid by an oil filled housing incorporating two type 21 carbon ceramic mechanical seals mounted in tandem. This seal housing shall be equipped with a moisture sensing probe installed between the seals, and the sensing of moisture in the seal chamber shall be automatic, continuous and not require the pump be stopped or removed from the wet well.

8.01 **EXCEPTIONS (SENSOR)**

The seal failure sensor is optional on single phase automatic and single phase manual pumps.

9.01 **IMPELLER**

The Impeller shall be high capacity, two vane, high head design with pump out vanes on the back side. These vanes wash out grit and stringy material that will damage the shaft and mechanical seal.

10.01 **AUTOMATIC CONTROL**

All single phase pumps should be capable of automatic operation.

11.01 **PRESSURE SWITCH**

The Single Phase SPD50H pump is furnished with a pressure diaphragm switch that is UL listed for water and sewage and CSA certified. The diaphragm switch cord shall be fitted with a piggy-back plug that allows the pump to be operated manually without removal from the sump.

12.01 **FLOAT SWITCH**

The SPD100H pump is supplied with a tilt-sensitive wide-angle float switch which is sealed in a non-corrosive PVC enclosure. The switch is UL listed for water and sewage and CSA certified. The float switch cord shall also be fitted with a piggy-back plug that allows the pump to be operated manually without removal from the sump.

13.01 **PAINTING**

All cast iron parts shall be painted before assembly with a water reducible alkyd air dried enamel. The paint shall be applied in one coat with a minimum thickness of 3 to 4 mils.

14.01 **TESTING**

All pumps shall be individually tested to include the following:

1. The pump and power cord shall be visually inspected for imperfections, cuts or nicks.
2. The pump shall have a ground continuity check and the motor chamber shall be Hi-potted to test for moisture content and/or insulation defects.
3. The motor and volute housing shall be pressurized and a 10 second air leak decay test run.
4. Oil is added, and the pump is run. Voltage and current are monitored visually, electronically, and the tester listens for any noise or malfunction.

HYDROMATIC®

SPD50H/100H

Submersible Effluent Pump

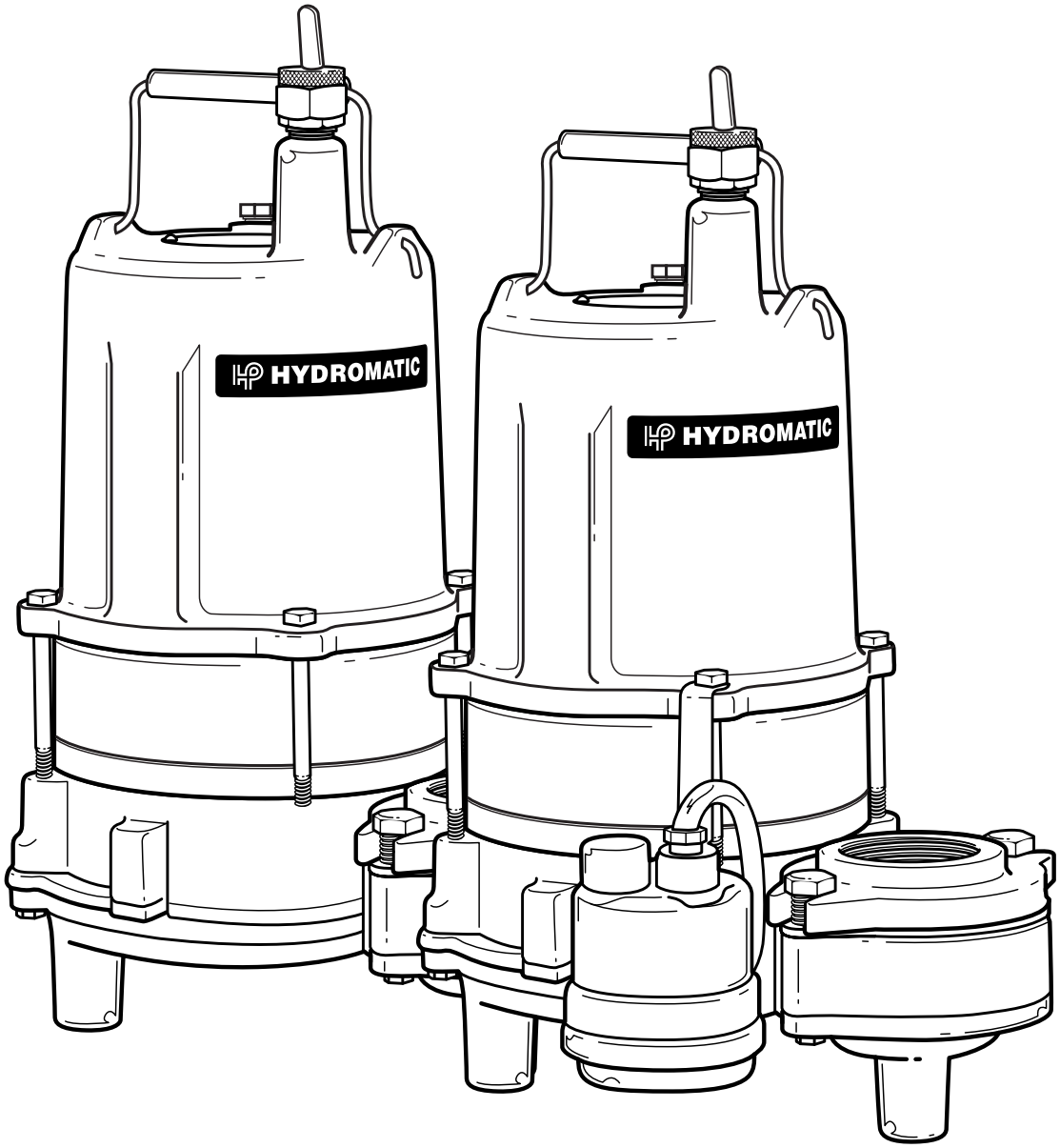

NOTE! To the installer: Please make sure you provide this manual to the owner of the pumping equipment or to the responsible party who maintains the system.

Pentair Water™

General Information

Thank you for purchasing your Hydromatic® pump. To help ensure years of trouble-free operation, please read the following manual carefully.

Before Operation:

Read the following instructions carefully. Reasonable care and safe methods should be practiced. Check local codes and requirements before installation.

Attention:

This manual contains important information for the safe use of this product. Read this manual completely before using this product and refer to it often for continued safe product use. DO NOT THROW AWAY OR LOSE THIS MANUAL. Keep it in a safe place so that you may refer to it often.

WARNING: Before handling these pumps and controls, always disconnect the power first. Do not smoke or use sparkable electrical devices or flames in a septic (gaseous) or possible septic sump.

Pump Warning

To reduce risk of electrical shock:

1. **Risk of Electrical Shock:**

   This pump has not been investigated for use in swimming pool areas.

2. **Risk of Electrical Shock:**

   Connect only to a properly grounded receptacle.

   Septic tank to be vented in accordance with local plumbing codes.

   Do not smoke or use sparkable electrical devices or flame in a septic (gaseous) or possible septic sump.

   If a septic sump condition exists and if entry into sump is necessary, then (1) provide proper safety precautions per OSHA requirements and (2) do not enter sump until these precautions are strictly adhered to.

   Do not install pump in location classified as hazardous per N.E.C., ANSI/NFPA 70 - 2001.

   Failure to heed above cautions could result in injury or death.

Pump Installation

These important instructions must be followed for satisfactory performance of your pump:

1. Provide proper sump (recommended minimum sump diameter is 30").
2. Do not set pump directly on the bottom of sump if it is not solid. Raise the pump by using bricks or concrete blocks underneath it.
3. Make sure sump is free of string, cloth, nails, gravel, etc. before installing pump.
4. Risk of electrical shock — connect only to a properly grounded receptacle.
5. Do not remove ground pin from electrical plug.
6. Do not use an extension cord.
7. For proper automatic operation, make sure the pump power cord is plugged into the piggyback receptacle on the diaphragm switch cord.
8. Connect to separate electrical circuit taken directly from main switch.
9. Use steel or plastic pipe for all connecting lines between pump and sewer outlet.

   Note: Some city regulations do not allow installing a pump with plastic pipe. Check local regulations.

10. In applications in which the pump may sit idle for months at a time, it is recommended that the pump(s) be cycled every month to ensure the pumping system is working properly when needed.
11. Hydromatic check valve should be installed in discharge pipe.
12. An audible alarm system such as the Q Alert (indoor use only) for high water conditions should be installed in every pump for greater protection. Contact your Hydromatic distributor for additional panel applications.

    Warning: When using the automatic diaphragm switch, the vent tube in the plug must be clear of obstructions.

    Do not bend cord. This will cause a crimp in the vent tube and switch failure will occur. Pump should be plugged into a single outlet, where vent tube can "breathe." Blocking tube or bending cord will void the warranty.

Pump Servicing

Read the following instructions carefully before replacing any parts. Reasonable care and safe methods should be practiced. Check local codes and requirements before installation. Only a competent electrician should make the installations.

Tools Required

General shop tools include socket wrenches and a bearing puller. An ohmmeter is required to thoroughly check motor and wiring.

For proper automatic operation, make sure the pump power cord is plugged into the piggyback receptacle on the float switch cord.

Before removing the pump from its installation for repairs, check first to see if the trouble is caused by:

1. Miswiring of the pump into the terminal block.
2. Miswiring of the float level controls into the panel.
3. Miswiring inside the control panel.
4. Trip circuit breaker. If the breaker is manually reset and then trips off again, the problem could be:
   a. short circuit in motor or control panel
   b. water in the motor housing
   c. insufficient amp capacity of wiring or breakers
   d. improper panel wiring
5. Tripped overload. If overload is manually reset and then trips off again, the problem could be:
   a. pump or piping is clogged
   b. pump motor or bearings may be defective
   c. start capacitor in motor may have failed
   d. pump may be miswired to terminal block
   e. head is lower than rating, pumping too much liquid
6. Air locked pump. Disconnect piping at union and run until all air bubbles are expelled.
7. Wrong impeller rotation. Rotation should be counterclockwise when looking at the impeller. Correct improper rotation on three phase pumps by reversing any two line leads. No rotation check is necessary on single phase pumps.
8. Closed discharge gate valve.
9. Plugged impeller or pipeline.
10. Discharge head may be too high. Check elevation against design point of pump.
11. Floats not hanging free in the sump.
12. Malfunctioning floats.

Disconnect power supply.

Checking Power Cord

To be sure wires are not burned off or broken in cord, use ohmmeter for check. Set ohmmeter scale pointer to R x 1 scale and attach one meter lead to white cord wire and one meter lead to black cord wire, then place a screwdriver blade across terminals of plug. If cord is OK, meter needle will go to zero and stay there. If meter needle does not move, this will indicate an open wire and cord must be replaced.

Motor

Warning: Be certain power to pump is off! Disconnect pump power cord from terminals in control panels (manual pump models) and power source (automatic models) and remove pump from sump.

1. Clean any dirt or trash from the outside of the pump before dismantling.

   If the unit is being operated by float or diaphragm switch, unplug the pump from the piggyback receptacle and plug the pump directly into the power source. If the pump starts each time it is plugged directly into the receptacle and does not start each time when plugged into the piggyback switch with the float raised or the diaphragm switch pressed into the start position, replace the complete piggyback switch assembly and retest with new assembly.
2. If motor does not run when tested as described above, the capacitor and/or stator must be checked.

   Disconnect from power supply.

   Remove plug (#6) from top of housing and pour oil into container, preferably clear, so that oil can be observed.
3. If oil is clear, it will indicate motor is not burned and there has been no water leak into the motor. If oil is cloudy, it will indicate water in motor, or, if oil is black, it will indicate a burned stator.
4. After draining oil, carefully loosen the power cord assembly (#22) from the motor housing (#2). With power cord loose, remove the four wire nuts and screws (#4) and carefully lift off the motor housing (#2) exposing the capacitor (#28) (1ø only) and the motor assembly.

SPD50H

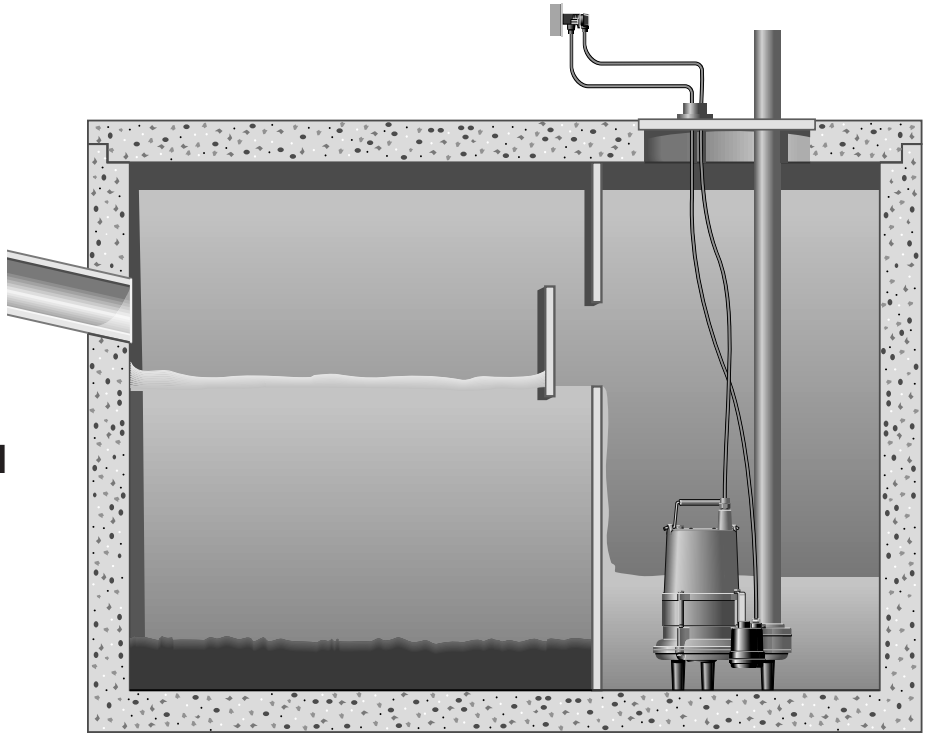

SPD100H

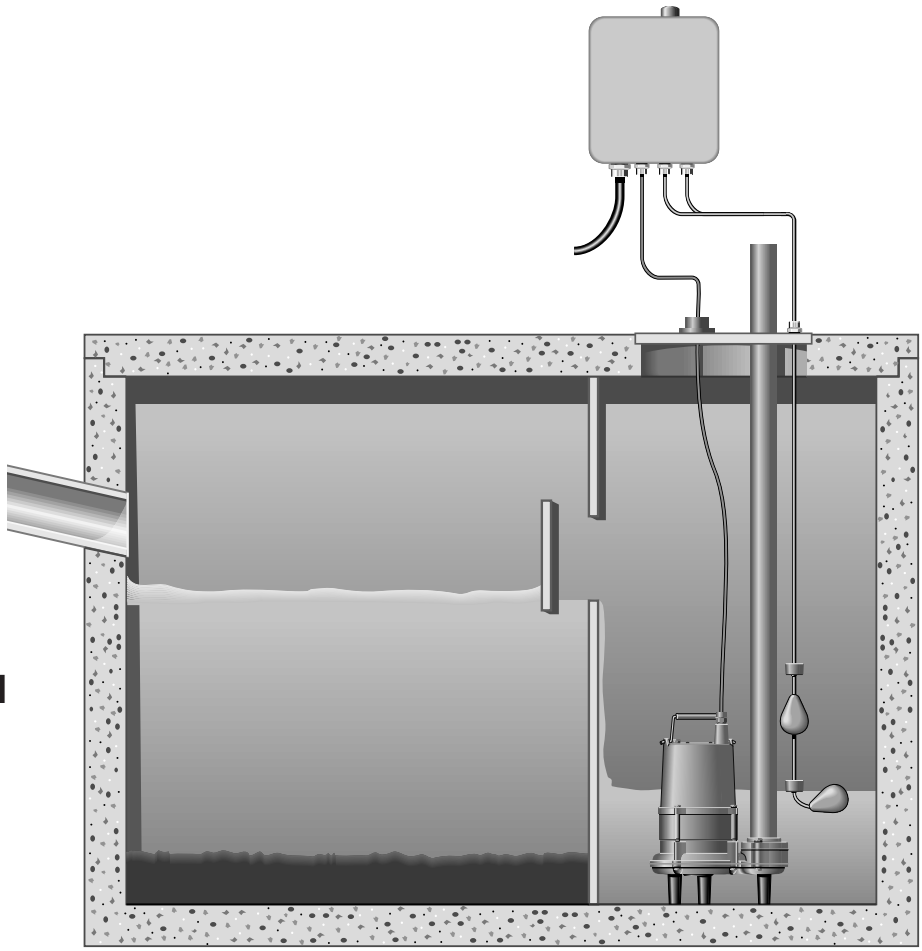

Pump Servicing

5. On single phase (1ø) units, check capacitor (#28) using ohmmeter. With ohmmeter scale set at R x 1000, attach meter leads to capacitor. The meter needle should go to zero and come back slowly. If it does not, the capacitor should be replaced.
6. To check motor stator, remove power cord leads from terminal bushings on top of motor (1ø only; 3ø remove wire nuts). If stator is visibly burned, motor assembly must be replaced.
7. *Ground check* on stator should be performed using ohmmeter with scale set at R x 100 and checking meter by putting both meter leads together and adjusting the needle knob until meter reads zero. If meter cannot be adjusted to zero, it will indicate that batteries in meter must be replaced. Always make this test with the meter when scale pointer is set to a new scale before making any checks on the motor.

   Now connect one meter lead to one terminal of stator and touch and other meter lead to motor stator shell. If needle on ohmmeter goes completely to zero, the motor probably has a wire touching the stator at some point and the motor assembly will have to be replaced.
8. *Winding resistance test* should be performed if the ground test is satisfactory. Use ohmmeter with scale pointer set on R x 1 scale. On this scale, meter reads directly on ohms. Always check the meter with leads together as described above under Ground Check test before making a reading of the winding.

   Connect one motor lead to the white wire terminal and the other meter lead to the black wire terminal. This reading is for the main winding. If the readings obtained do not agree with those given below, the stator is defective and the motor assembly must be replaced.

   Reconnect the wires as they were removed.

	RESISTANCE					
	SPD50H			SPD100H		
	1ø Start	1ø Main	3ø Bal.	1ø Start	1ø Main	3ø Bal.
115V	6.53	1.90	—	—	—	—
230V	6.53	3.80		5.06	3.06	9.7
460V	—	—		—	—	9.7

9. For three phase pumps, remove the power cord assembly (#22) by cutting the butt connection and wire nuts (#32) and remove the power cord from the pump.
10. Twist the three leads of one end of the power cord together. Then at the other end, with an ohmmeter, check any two leads. Also check the third lead with either of the first two. If a zero reading is indicated for any wire, the wire is broken and a new power cord assembly must be ordered.
11. If the winding is grounded, remove the pipe plug in the top of the pump and drain the oil into a clear container. A milky appearance to the oil will indicate that water has entered through worn or damaged seals or O-rings. If this is the case, the mechanical seals and all O-rings will have to be replaced.

Seal Housing

The pump is equipped with two mechanical seals mounted in tandem. The lower seal (#14) and the upper seal (#5) consist of a ceramic stationary seat and a carbon rotating ring.

As noted, if water is detected in the motor housing, inspect the power cord connection, pipe plug connections, O-rings, the motor housing itself, and the two mechanical seals.

There are two quarts of oil in the motor housing. This is a paraffinic SE-40 process oil. The same oil is used in the seal housing (#20) between the two mechanical seals. To check the seals, remove the lower housing pipe plug (#8) and pour the oil out into a clean, preferably glass, container. Look for the milky color as noted previously.

If the oil is clear, the lower seal is still good. If this seal is damaged, water will seep in and continue to stain the oil, changing it from clear, to slightly discolored, to cloudy, and finally to a milky white.

Except for very rare instances, the motor will continue to be protected by the upper mechanical seal.

Lower Seal

If water is found in the seal chamber, the lower seal must be replaced. Separate the volute by removing the three cap screws (#9) holding the base (#12) to the upper volute.

Insert a large screwdriver in the slotted pump shaft and strike the impeller sharply with a plastic or rubber headed hammer. The impeller should spin free. The impeller holds the rotation carbon ring of the lower mechanical seal against the stationary ceramic seat by compressing a stainless steel spring.

When the impeller is removed, the spring will relax, allowing the

Pump Servicing

carbon ring to be removed. There is a rubber sleeve (bellows) inside the spring which grips the pump shaft. This often restricts the spring and must be pried or pulled loose.

With the carbon ring, spring, and rubber sleeve removed, wedge the ceramic seat out of the housing. Be sure not to scratch or mar the pump shaft.

Upper Seal

1. To remove and replace the upper mechanical seal (#5), the base (#12), impeller (#11), lower mechanical seal (#14), and volute (#7) must be removed first. Drain the seal oil from the housing by removing pipe plug (#8).
2. The rotating carbon ring and stainless steel spring are held in place by a snap ring (#27) and washer (#10). Remove these.
3. Remove the four hex head stator bolts and lift the stator (#3). A screwdriver can be inserted under the stator shell in order to remove the stator.
4. Bump the end of the shaft with a plastic hammer. This will push the rotating half of the mechanical seal from the shaft and also push the lower bearing from the seal plate. Now remove the shaft, rotor, and bearing assembly from the seal plate.
5. If water was found in the oil, the rotating and stationary halves of the mechanical seal must be replaced. Remove the stationary seal half by inserting a screwdriver into seal plate from the top and tapping lightly with a hammer.
6. Turning the bearing by hand: if it feels rough when turned or looks rusted, it should be replaced. Obtain a bearing puller to remove the bearing. If a puller cannot be replaced over the bearing, remove the outer face by cracking in a vise. Now the outer face and balls can be removed, allowing the inner face to be pulled.

Reassembly

1. Thoroughly clean the seal plate (#20), particularly the seal and bearing pockets. All sand and dirt must be removed.
2. If the stationary seal half was removed, use a plastic pusher to press it into the housing. Make sure the rubber ring goes in first. Do not use any sharp objects that may damage the seal.
3. When installing a replacement bearing, press only on the inner face and make sure the bearing is flush against the snap ring. If a press is not available, the bearing can be tapped onto the shaft using a sleeve that bears only on the inner face.

   Pressing on the outer face will ruin the bearing.
4. Push the shaft, rotor and ball bearing assembly into the seal plate, being careful not to chip the ceramic of the stationary seal half.
5. Replace the stator if it is visibly burned or if the ground resistance test or the winding resistance test has failed. Note that the replacement stator must be of the same manufacture as the existing rotor, or vice versa. Replace the four stator bolts.
6. Remove the old O-ring (#19), regardless of condition, and replace. Place the new O-ring over the seal plate shoulder. Do not roll it. If twisted, water may enter chamber and cause failure.
7. Clean the motor housing thoroughly, then position it onto the seal plate.
8. Press the rotating seal half onto the shaft with the rubber ring facing the impeller.

   Caution: Mixing old and new seal parts will cause immediate seal failure. When replacing seal, replace both the rotating and the stationary seal halves.
9. Reassemble the lower seal as described.
10. Add a drop of Locktite 222 to the shaft and screw the impeller on hand-tight. The impeller (#11) will force the rotating seal half into position.
11. Set the seal housing (#20) and motor housing (#2) assembly into the volute case (#7) and secure with four hex head screws (#4).
12. To replace the power cord (#22) on single phase pumps, as determined on page 5, first slip the stator lead wires through the holes in the wire seal assembly. Coat the cord grip threads with pipe dope or apply Teflon® tape and screw the new power cord assembly into the motor housing. Referring to wiring diagrams in this manual, secure wires together.

    Do not tape leads together as the hot oil will deteriorate the tape and cause motor failure.
13. Before filling the motor housing with oil, an air test should be performed. Apply 7 to 8 pounds of air pressure in the ¼" NPT tap on the top of the motor cover and seal chamber.

Note: Too much pressure will damage the seal.

Then submerge the pump in water and check for leaks. If a leak occurs, isolate where it is coming from and correct the problem by replacing the sealing part. If there are no leaks, fill the motor and seal housing with high grade transformer oil, such as Sohio Factopure SE40 or equivalent, to at least one inch below top of housing.

Do not fill the motor housing completely — allow air space for expansion. Replace oil plugs (#6). Turn pump on side and fill seal chamber to 1" from top. Replace plug (#8) and stand pump up.

14. Connect power cord wires to terminals in panel, or connect power source, and check pump running. Motor should run smoothly and be free of vibration.

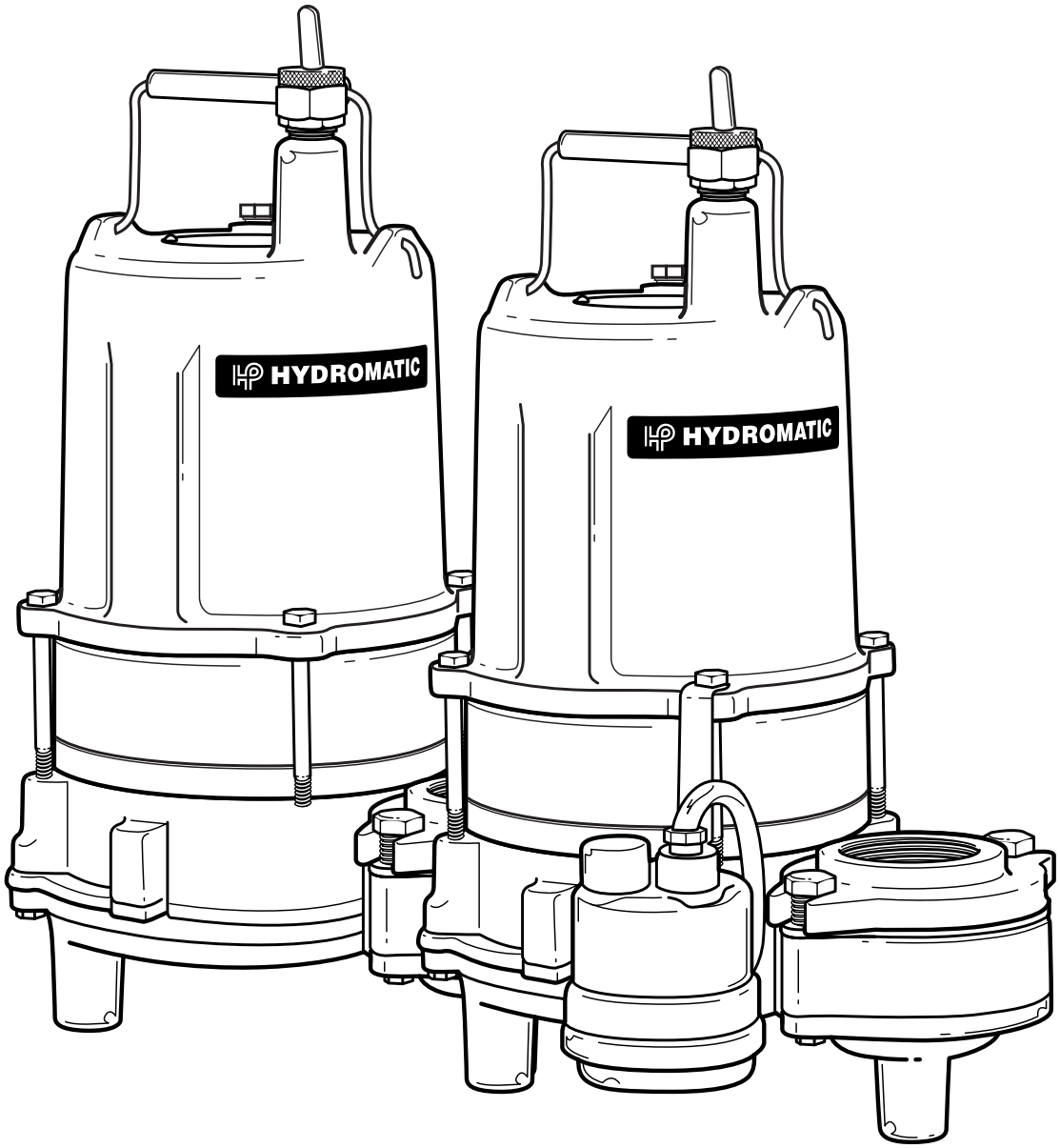

Pump Troubleshooting

Pump does not run or hum.

1. Line circuit breaker may be off, or fuse, if used, may be blown or loose.
2. Water level in sump may be too low. Run in more water.
3. Pump cord plug may not be making contact in receptacle.
4. If pump is using the series cord plug, the two plugs may not be plugged tightly together.
5. Float may be stuck. Be sure float operates freely in basin.
6. If all symptoms check OK, motor winding may be open; take to service center for check.

Pump runs but does not deliver water.

1. Check valve may be installed backward. Arrow in valve points in direction of flow.
2. Discharge gate valve, if used, may be closed.
3. Pump may be air locked. Start and stop several times by plugging and unplugging cord. Check vent hole in pump case for plugging.
4. Pump head may be too high. Pump cannot deliver water over (SPD50H) 50' or (SPD100H) 64' vertical. Pump must be sized to operating conditions.
5. Inlet in pump base may be clogged. Remove pump and clean out openings.
6. Impeller or volute openings may be plugged or partially plugged. Remove pump and clean per maintenance instructions.

Pump runs and pumps out sump but does not stop.

1. Float is stuck in *up* position. Be sure float operates freely in basin. Diaphragm vent tube in power cord may be blocked or bent. Clear obstruction.

Pump runs but delivers only small amount of water.

1. Pump may be air locked. Start and stop several times by plugging and unplugging cord. Check vent hole in pump case for plugging.
2. Pump head may be too high. Pump cannot deliver water over (SPD50H) 50' or (SPD100H) 64' vertical. Horizontal distance does not affect pumping, except loss due to friction.
3. Inlet in pump base may be clogged. Remove pump and clean out openings.
4. Impeller or volute openings may be plugged or partially plugged. Remove pump and clean per maintenance instructions.
5. Pump impeller may be partially clogged causing motor to run slow, resulting in motor overload.

Fuse blows or circuit breaker trips when pump starts.

1. Inlet in pump base may be clogged. Remove pump and clean out openings.
2. Impeller or volute openings may be plugged or partially plugged. Remove pump and clean per maintenance instructions.
3. Pump impeller may be partially clogged causing motor to run slow, resulting in motor overload.
4. Fuse size or circuit breaker is too small.
5. Defective motor stator: return to authorized Hydromatic service center.

Motor runs for short time, stops, then after short period starts again. Indicates tripping overload caused by symptom shown.

1. Inlet in pump base may be clogged. Remove pump and clean out openings.
2. Impeller or volute openings may be plugged or partially plugged. Remove pump and clean per maintenance instructions.
3. Pump impeller may be partially clogged causing motor to run slow, resulting in motor overload.
4. Defective motor stator; return to Hydromatic service center.

If symptom is not found on chart, call authorized Hydromatic distributor or repair center for assistance.

Pump Notes

SPD50H/100H Three Phase

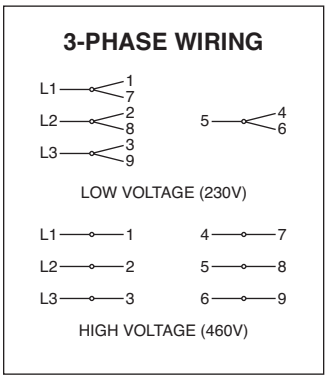

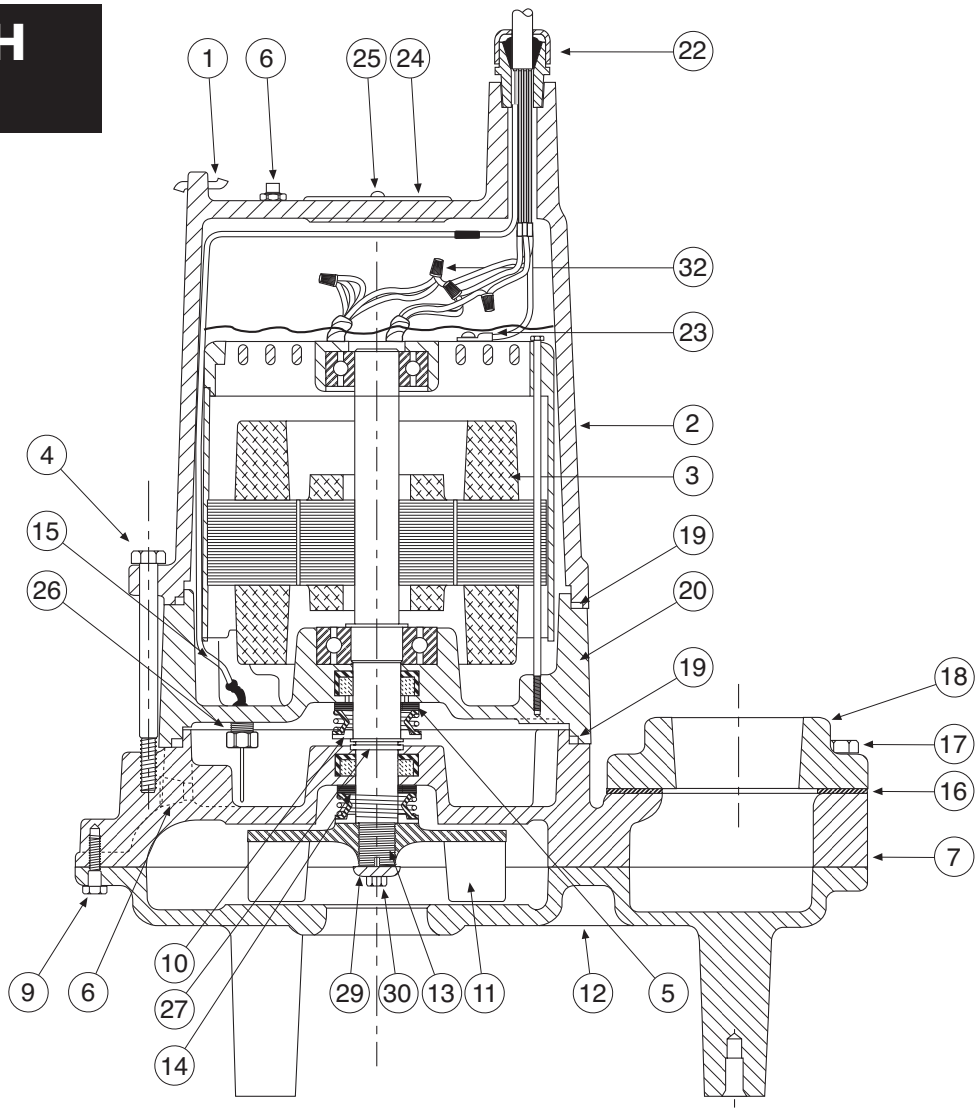

MODEL – SPD50H/SPD100H THREE PHASE

Ref. No.	Part No.	Description	Qty.	Ref. No.	Part No.	Description	Qty.
1	60-000-5	Handle	1	16	324-001-1	Gasket	1
2	56-023-2	Housing, Motor	1	17	19103A052	Screw, Hex Hd.	2
3	12625-000-1	Motor Assembly, 230/460V	1	18	208-000-2	Discharge Flange	1
3	12625-600-1	Motor Assembly, 575V	1	19	77-003-1	O-Ring	2
4	101-017-1	Screw, Hex Hd.	4	20	12596-001-2	Housing, Seal/Bearing	1
5	17048-000-1	Shaft Seal – Upper	1	22	11644-018-5	Power Cord Assembly, 20' w/S.F., 230/460/575V	1
6	14981-001-1	Pipe Plug, 1/4 NPT	1	23	*	Oil	—
7	202-005-2	Volute Case	1	24		Nameplate	1
9	176-005-1	Screw, Hex Hd.	6	25	4580-001-1	Drive Screw	2
10	156-052-1	Washer	1	26	8472-007-5	Seal Failure Assembly	1
11	370-000-2	Impeller – SPD100	1	27	975-001-1	Snap Ring	1
11	8155-000-2	Impeller – SPD50	1	29	111-008-1	Washer, Impeller	1
12	404-002-2	Suction Bottom	1	30	518-001-1	Screw, Impeller	1
13	*	Locktite Sealant	—	32	73-001-1	Connector	5
14	14525A010	Shaft Seal	1				
15	6000-056-1	Wire – Terminal Assembly	1				

SPD50H/100H Single Phase

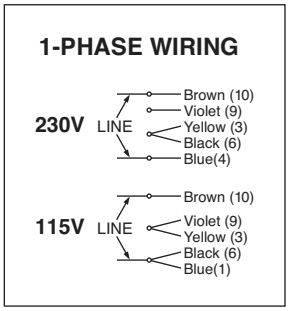

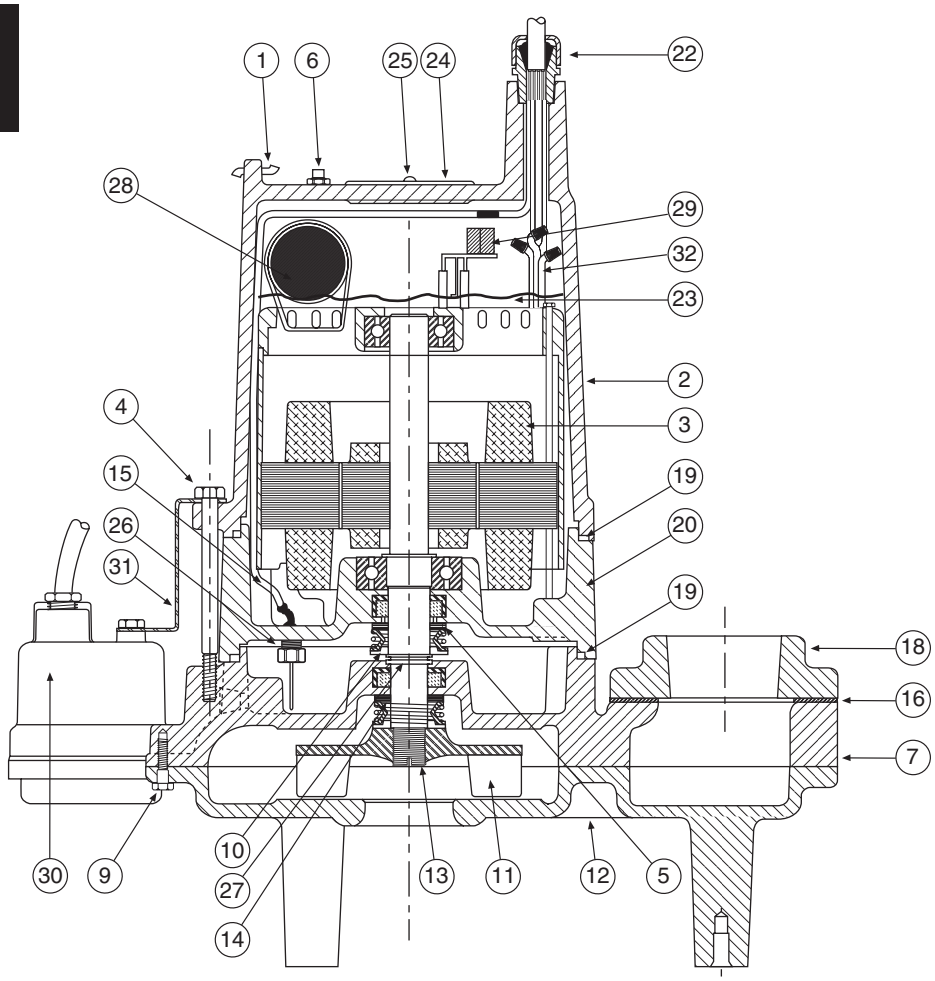

MODEL – SPD50H/SPD100H SINGLE PHASE

Ref. No.	SPD50H Part No.	SPD100H Part No.	Description	Qty.	Ref. No.	SPD50H Part No.	SPD100H Part No.	Description	Qty.
1	60-000-5	60-000-5	Handle	1	22	13216-002-5	13216-022-5	Power Cord Assembly, 20' w/plug, 230V	1
2	56-023-2	56-023-2	Housing, Motor	1	22	11644-006-5	n/a	Power Cord Assembly, 10' w/S.F., 115V	1
3	13225-000-1	n/a	Motor Assembly, 115V	1	22	11644-007-5	n/a	Power Cord Assembly, 20' w/S.F., 115V	1
3	13225-000-1	12624-000-1	Motor Assembly, 230V	1	22	11644-005-5	11644-005-5	Power Cord Assembly, 10' w/S.F., 230V	1
4	101-017-1	101-017-1	Screw, Hex Hd.	4	22	11644-008-5	11644-008-5	Power Cord Assembly, 20' w/S.F., 230V	1
5	17048-000-1	17048-000-1	Shaft Seal-Upper	1	23	*	*	Oil	—
6	14981-001-1	14981-001-1	Pipe Plug, 1/4 NPT	1	24	13425-069-1		Nameplate	1
7	202-005-2	202-005-2	Volute Case	1	25	4580-001-1	4580-001-1	Drive Screw	2
9	176-005-1	176-005-1	Screw, Hex Hd.	6	26	8472-007-5	8472-007-5	Seal Failure Assembly	1
10	156-052-1	156-052-1	Washer	1	27	975-001-1	975-001-1	Snap Ring	1
11	8155-000-2	370-000-2	Impeller	1	28	13208-000-1	13208-000-1	Capacitor	1
12	404-002-2	404-002-2	Suction Bottom	1	29	13209-000-1	n/a	Solid State Switch, 115V	1
13	*	*	Locktite Sealant	—	29	13209-002-1	13209-001-1	Solid State Switch, 230V	1
14	14525A010	14525A010	Shaft Seal	1	30	51752-403-7	51752-403-7	Diaphragm Switch Kit (Auto) 10'-115V	1
15	6000-056-1	6000-056-1	Wire – Terminal Assembly	1	30	51752-404-7	51752-404-7	Diaphragm Switch Kit (Auto) 20'-115V	1
16	324-001-1	324-001-1	Gasket	1	30	51752-405-7	51752-405-7	Diaphragm Switch Kit (Auto) 20'-230V	1
17	19103A052	19103A052	Screw, Hex Hd.	2	31	13421-001-3	13421-001-3	Bracket – Float Switch	1
18	208-000-2	208-000-2	Discharge Flange	1	32*	73-001-1	73-001-1	Wire Nuts	4
19	77-003-1	77-003-1	O-Ring	2					
20	12596-001-2	12596-000-2	Housing, Seal/Bearing	1					
22	13216-000-5	n/a	Power Cord Assembly, 10' w/plug, 115V	1					
22	13216-001-5	n/a	Power Cord Assembly, 20' w/plug, 115V	1					

WARRANTY

Hydromatic® warrants to the original purchaser of each Hydromatic product(s) that any part thereof that proves to be defective in material or workmanship within one year from date of installation or 18 months from manufacture date, whichever comes first, will be replaced at no charge with a new or remanufactured part, F.O.B. factory. Purchaser shall assume all responsibility and expense from removal, reinstallation and freight. Any item(s) designated as manufactured by others shall be covered only by the express warranty of the manufacturer thereof. This warranty does not apply to damage resulting from accident, alteration, design, misuse or abuse. The pump must be installed, operated and maintained in accordance with the published instructions of the appropriate Installation & Service Manual.

All dual seal non-clogs and 3–5 HP grinders must have seal failure and heat sensors attached and functional for Warranty to be in effect. If a seal failure should occur, Hydromatic will cover only the lower seal and labor thereof. Labor is based on Authorized Service Center contract allowance. If the heat sensor is not attached and functional, Warranty is void. If the seal failure sensor is not attached and functional, Warranty is void.

If the material furnished to the Buyer shall fail to conform to this contract or to any of the terms of this written warranty, Hydromatic shall replace such nonconforming material at the original point of delivery and shall furnish instruction for its disposition. Any transportation charges involved in such disposition shall be for the Buyer's account. The Buyer's exclusive and sole remedy on account or in respect of the furnishing of material that does not conform to this contract or to this written warranty, shall be to secure replacement thereof as aforesaid. Hydromatic shall not in any event be liable for the cost of any labor expended on any such material or for any incidental or consequential damages to anyone by reason of the fact that such material does not conform to this contract or to this written warranty.

ALL IMPLIED WARRANTIES, INCLUDING THE IMPLIED WARRANTY OF MERCHANTABILITY AND THE IMPLIED WARRANTY OF FITNESS FOR A PARTICULAR PURPOSE, ARE DISCLAIMED TO THE SAME EXTENT AS THE EXPRESS WARRANTY CONTAINED HEREIN. Some states do not allow limitations on how long an implied warranty lasts, so the above limitation may not apply to you.

MANUFACTURER EXPRESSLY DISCLAIMS AND EXCLUDES ANY LIABILITY FOR CONSEQUENTIAL OR INCIDENTAL DAMAGES FOR BREACH OF ANY EXPRESS OR IMPLIED WARRANTY ARISING IN CONNECTION WITH THIS PRODUCT, INCLUDING WITHOUT LIMITATION, WHETHER IN TORT, NEGLIGENCE, STRICT LIABILITY CONTRACT OR OTHERWISE. Some states do not allow the exclusion or limitation of incidental or consequential damages, so the above limitation or exclusion may not apply to you. This warranty gives you specific legal rights, and you may also have other rights which vary from state to state.

HYDROMATIC®
Pentair Water

– Your Authorized Local Distributor –

USA
740 East 9th Street, Ashland, Ohio 44805
Tel: 419-289-3042 Fax: 419-281-4087

www.hydromatic.com

CANADA
269 Trillium Drive, Kitchener, Ontario, Canada N2G 4W5
Tel: 519-896-2163 Fax: 519-896-6337

© 2007 Hydromatic® Ashland, Ohio. All Rights Reserved.

Part # 5625-193-1

Item # W-03-193 9/07

COUNTRY LANE 2.0 MG
ELEVATED STORAGE TANK

CITY OF ROCKWALL, TEXAS

SPECIFICATION SECTION: TS1

OPERATIONS & MAINTENANCE MANUAL

CATHODIC PROTECTION SYSTEM

SUPPLIER / SUBCONTRACTOR

CORPRO WATERWORKS
CONTACT: MILES STEELE
581 SIGMAN ROAD, SUITE 300
CONYERS, GEORGIA 30208
(770) 761-5400

GENERAL CONTRACTOR

LANDMARK STRUCTURES I, LP
1665 HARMON ROAD
FORT WORTH, TEXAS 76177
(817) 439-8888

CORRPRO WATERWORKS

OPERATION & MAINTENANCE MANUAL

TABLE OF CONTENTS

SECTION I	INTRODUCTION
SECTION II	SERVICE REPORT & FINAL TEST RESULTS
SECTION III	LAYOUT DRAWINGS, CATHODIC PROTECTION & PRODUCT DATA SHEETS
SECTION IV	WARRANTY
SECTION V	UNDERSTANDING CATHODIC PROTECTION
SECTION VI	RECTIFIER SURVEILLANCE
SECTION VII	RECTIFIER TROUBLESHOOTING
SECTION VIII	INSTRUCTIONS FOR TASC RECTIFIERS
SECTION IX	SAMPLE – SERVICE AGREEMENT
SECTION X	MONTHLY MONITORING LOG

SECTION I - INTRODUCTION

SECTION I

INTRODUCTION TO CATHODIC PROTECTION

OBJECTIVES

1. To acquaint maintenance personnel with the fundamentals of cathodic protection.

2. To enable maintenance personnel to conduct periodic testing on existing cathodic protection systems to assess their effectiveness.

METHODS

Monitor structure-to-water potential measurements and rectifier unit outputs to ensure effective levels of cathodic protection are maintained.

SECTION II – SERVICE REPORT & FINAL TEST RESULTS

corrpro®

FIELD SERVICES WORK ORDER
CORRPRO WATERWORKS - ATLANTA
1081 SIGMAN ROAD, SUITE 300 CONYERS, GA
Phone: (770)761-5400

Route #:
Work Order #: 0079126
Session #: 00008578

CUSTOMER: CW003272-000
LANDMARK STRUCTURES, INC.
1665 HARMON ROAD
FORT WORTH, TX 76177

Ship To: CW003272-006
ROCKWALL, CITY OF
325 N COUNTRY LANE
Rockwall, TX 75087

TANK ADDRESS → 325 N. Country Ln,

REPRINT

Customer Contact Name and Number: AIMEE HANEI PH: 817-439-8888
Customer P.O. 1190-15 Customer No.: 1 OF 2 Job No.: A01146 Contract Date: 8/31/08 Schedule: 7/31/08
Tank Capacity and Type: 2000000/"NORTH COUNTRY LANE"/COMPOSITE Type of Service: IN
Tank Address: _____ County: ROCKWALL
Rectifier Mfg.: CORRPOWER Ser. No.: C-070680 System No.: 56363 Rating: 30V 08A TASC8
Anode Type & Configuration: 12 Titanium .062" Full Length Drop @ Outer Ring

2 RefCell 801 @ Tank Bowl

NOTES: INSTALLED SYSTEM 90% COMPLETE. Wire pull completed on 7/29/08 MB
will need to run wire and make connections on return trip, too much SAFETY ISSUES AT JOB SITE, TOO MANY people, with multiple SAFETY ACTS occuring.

Measurements for testing, evaluation and adjustment: "Native/Off" _____ "On" _____ Does Tank "Ice Over" ☐Y ☐N _____ Other

FOUND:
a) Rectifier Tap Setting at: Course _____ Fine _____ Auto _____ Manual _____ Water Level _____
b) Rectifier Operating at:
Bowl: Volts _____ Amps _____ Pot. Set _____ Pot. Level _____
Riser: Volts _____ Amps _____ Pot. Set _____ Pot. Level _____
c) Resistance: Anode - Bowl _____ Riser _____ Aux. No. _____
Readings: Reference Cell - Bowl _____ Riser _____ Aux. No. _____

LEFT:
d) Independent Tank-to-Water Potential Profile Within Tank:

Tank Bottom	On	Instant Off

Cell To Cell Test: Portable Test Cell Neg.
Permanent Cell: #1 _____ #2 _____
Is Testing Isolated: ☐Y ☐N
Is Cell #2 In Riser: ☐Y ☐N
If "NO" Where _____

e) Rectifier Operation Adjusted To: Tap Setting: Course _____ Fine _____ Auto _____ Manual _____
Bowl: Volts _____ Amps _____ Pot. Set _____ Pot. Level _____
Riser: Volts _____ Amps _____ Pot. Set _____ Pot. Level _____

EVALUATIONS:
Electrical: _____
Anode: _____
Rectifier: _____
Overall System Performance: _____
Recommendations: _____

OPERATOR INSTRUCTIONS PROVIDED TO: _____
Do **NOT** adjust rectifier in automatically controlled mode of operation. Record meter readings at intervals not to exceed sixty (60) days.

CREW TIME IN: 11:30 CREW TIME OUT: 7:00 FOLLOW-UP REQUIRED: _____

If you have any questions please call the office noted above. We appreciate the opportunity of being of service.

CORRPRO
By: Bill Perry Date: 7/22/08

SUBSCRIBER'S ACCEPTANCE
By: NOT AVAILABLE Date: _____

CORRPRO WATERWORKS
www.corrpro.com

FIELD SERVICES WORK ORDER

CUSTOMER:

Ship To: ROCKWALL, CITY OF
325 N. COUNTRY LANE
ROCKWALL, TX. 75087

Customer Contact Name and Number: AIMEE HANEI PH. 817-439-8888
Customer P.O. 1190-15 Customer No.: 1 OF 2 Job No.: A0114 b Contract Date: 8-31-08 Schedule: 7-31-08
Tank Capacity and Type: 2000000 "NORTH COUNTRY LANE Type of Service: IN
Tank Address: 325 N. COUNTRY LANE County: ROCKWALL
Rectifier Mfg.: CORRPOWER Ser. No.: C-070680 System No.: 56363 Rating: 30V 8A TASC8
Anode Type & Configuration: 12 TITANIUM .062" FULL LENGTH DROP @ OUTER RING
2 REF CELL 80' @ TANK BOWL

NOTES: INSTALLED SYSTEM 95% COMPLETE. TANK NEEDS WATER AND RECTIFIER NEEDS AC POWER.

Measurements for testing, evaluation and adjustment: "Native/Off" _____ "On" _____ Does Tank "Ice Over" ☐ Y ☐ N _____ Other

FOUND: a) Rectifier Tap Setting at: Course _____ Fine _____ Auto _____ Manual _____ Water Level _____

b) Rectifier Operating at:
Bowl: Volts _____ Amps _____ Pot. Set _____ Pot. Level _____
Riser: Volts _____ Amps _____ Pot. Set _____ Pot. Level _____

c) Resistance: Anode - Bowl _____ Riser _____ Aux. No. _____
Readings: Reference Cell - Bowl _____ Riser _____ Aux. No. _____

LEFT: d) Independent Tank-to-Water Potential Profile Within Tank:

Tank Bottom	On	Instant Off

Cell To Cell Test: Portable Test Cell Neg.
Permanent Cell: #1 _____ #2 _____
Is Testing Isolated: ☐ Y ☐ N
Is Cell #2 In Riser: ☐ Y ☐ N
If "NO" Where _____

e) Rectifier Operation Adjusted To: Tap Setting: Course _____ Fine _____ Auto _____ Manual _____
Bowl: Volts _____ Amps _____ Pot. Set _____ Pot. Level _____
Riser: Volts _____ Amps _____ Pot. Set _____ Pot. Level _____

EVALUATIONS:
Electrical: _____
Anode: _____
Rectifier: _____
Overall System Performance: _____

Recommendations: _____

OPERATOR INSTRUCTIONS PROVIDED TO: _____
Do **NOT** adjust rectifier in automatically controlled mode of operation. Record meter readings at intervals not to exceed sixty (60) days.

CREW TIME IN: 7:30 CREW TIME OUT: 9:30 FOLLOW-UP REQUIRED: _____

If you have any questions please call the office noted above. We appreciate the opportunity of being of service.

CORRPRO WATERWORKS
By: Clint Spratley Date: 7-29-08

SUBSCRIBER'S ACCEPTANCE
By: _____ Date: _____

ATLANTA CLEVELAND HOUSTON PHOENIX

SECTION III – LAYOUT DRAWINGS, CATHODIC PROTECTION, & PRODUCT DATA SHEETS

WASTEWATER STORAGE TANK CATHODIC PROTECTION SYSTEM

SUBMITTAL DOCUMENTS

CITY OF ROCKWALL
Rockwall, Texas

2,000,000 Gallon "North Country Lane" C.E.T.

prepared by:

CORRPRO WATERWORKS

581 Sigman Rd. - Suite 300 Conyers, Georgia 30013
PHONE (770)-761-5400 FAX (770)-761-5410

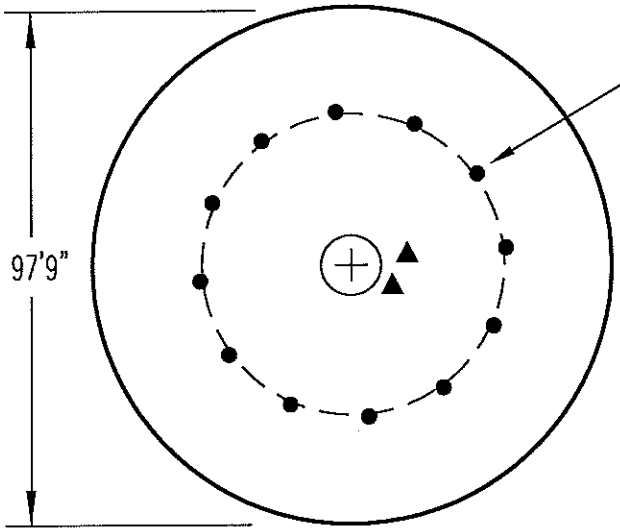

12 - 5"ø HANDHOLES CUT INTO THE TANK ROOF BY LANDMARK STRUCTURES, EVENLY SPACED EVERY 30° (degrees), ± SIX INCHES, ON A 24' RADIUS.

ANY QUESTIONS REGARDING THE PLACEMENT OF THE HANDHOLES SHOULD BE DIRECTED TO MILES STEELE WITH CORRPRO WATERWORKS @ (770)-761-5400 x-312

FOR HANDHOLE AND SUSPENSION DETAIL, SEE CORRPRO DRAWING NO. HHC-CUT1.

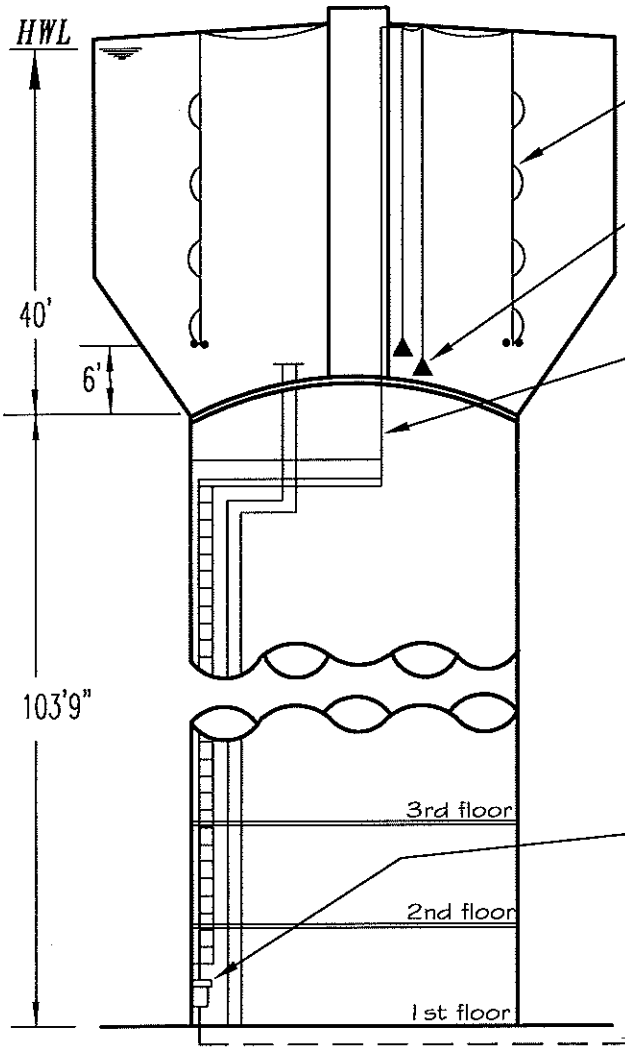

12 - TITANIUM MIXED METAL OXIDE ANODE STRINGS WITH EACH CONTAINING 34' OF .062"* ANODE WIRE, SUSPENDED 6' OFF THE TANK FLOOR.

2 - CORRPRO WATERWORKS - #IHRP-801 PERMACELLS.

1 - 1/2"ø GALVANIZED RIGID CONDUIT CONTAINING 2 - #12-7 STRAND THHN AND 1 - #18-3C TW WIRES.

*MODIFICATIONS MAY BE MADE TO MEET FIELD CONDITIONS.

LANDMARK STRUCTURES NEEDS TO ALLOW FOR AN AREA OF 3 SQUARE FEET NEAR THE ELECTRICAL PANEL TO FACILITATE MOUNTING OF THE RECTIFIER.

1 - CORRPRO WATERWORKS TASC VIII AUTOMATIC RECTIFIER RATED AT 30 VOLTS AND 8 AMPS.
(LOCATION TO BE DETERMINED BY PROJECT ENGINEER)

115V/60Hz/1ø A.C. SUPPLY BY OTHERS.

NO.	DATE	BY	REVISION

CORRPRO WATERWORKS
CLEVELAND • ATLANTA • NEW YORK • PHOENIX

DRAWN BY	M. STEELE
DESIGNED BY	M. STEELE
DATE	11/3/07
SCALE	
SHEET	1 OF 2
DWG. No.	ROCKWALL1

CATHODIC PROTECTION SYSTEM
2,000,000 GALLON ELEV. TANK
"North Country Lane Tank"
CITY OF ROCKWALL
ROCKWALL, TEXAS

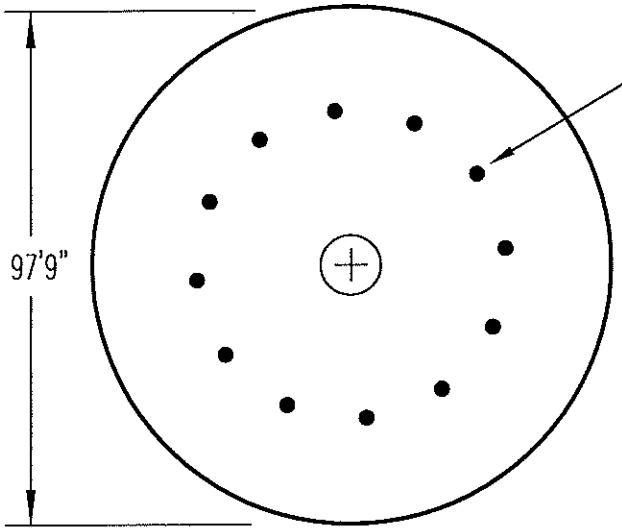

12 – 5"ø HANDHOLES CUT INTO THE TANK ROOF BY LANDMARK STRUCTURES, EVENLY SPACED EVERY 30° (degrees), ± SIX INCHES, ON A 24' RADIUS.

ANY QUESTIONS REGARDING THE PLACEMENT OF THE HANDHOLES SHOULD BE DIRECTED TO MILES STEELE WITH CORRPRO WATERWORKS @ (770)-761-5400 x-312

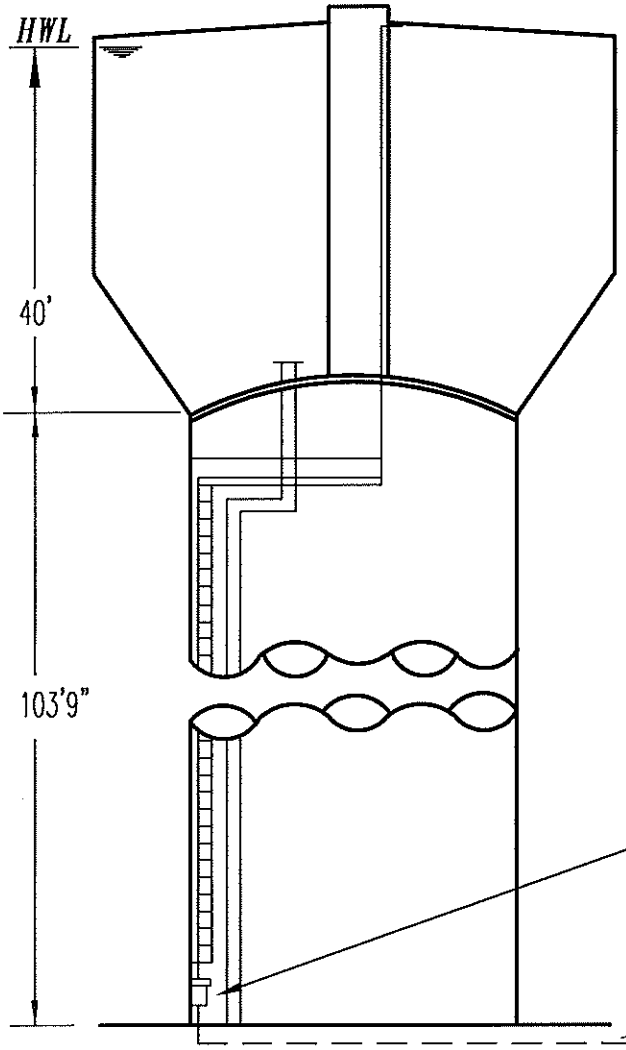

WORK TO BE PERFORMED BY:

LANDMARK STRUCTURES, INC.

LANDMARK STRUCTURES NEEDS TO ALLOW FOR AN AREA OF 3 SQUARE FEET NEAR THE ELECTRICAL PANEL TO FACILITATE MOUNTING OF THE RECTIFIER.

115V/60Hz/1ø A.C. SUPPLY BY OTHERS.

CATHODIC PROTECTION SYSTEM

CORRPRO WATERWORKS

CLEVELAND • ATLANTA • NEW YORK • PHOENIX

DRAWN BY	M. STEELE
DESIGNED BY	M. STEELE
DATE	11/3/07
SCALE	
SHEET	2 OF 2
DWG. No.	ROCKWALL2

HANDHOLE & RECTIFIER LOCATION DETAIL
2,000,000 GALLON ELEV. TANK
"North Country Lane Tank"
CITY OF ROCKWALL
ROCKWALL, TEXAS

2,000,000 Gallon "N. Country Ln." C.E.T.
City of Rockwall
Rockwall, Texas

Insert input data here:				Results		
Tank Diameter	97.75	feet		Current Required	9.9	amps
Tank Height	40	feet		Voltage Required	7.9	volts
Coating Efficiency	0.0%	coated steel		Minimum Anode Matr. Req'd.	99	feet
Current Density	0.5	mA/sq. ft.				
Anode Type	.062"	Titanium MMO		Actual Length of Anode Matr.:	408	feet
Water Resisitivity	3,360	ohm-cm		Actual Rating of Rectifier Unit:	30 volts / 8	amps
				Design Life of Anode System:	82	years

DESIGN CALCULATIONS
2,000,000 Gallon "N. Country Ln." C.E.T.
City of Rockwall
Rockwall, Texas

COMPUTATIONS:

1 **Surface Area to be Protected:**

Bare surface Area = Total Surface Area x (1 - Coating efficiency)

$A_T = \pi (R^2 + 2R L_P)$

where:

R = Tank Radius = 48.9 ft.

L_P = Tank Height = 40.0 ft.

$A_T = \pi ($ x 48.9 x 48.9 $+($ 2 x 48.9 x 40 $))$

$A_T =$ 19,788 sq. ft.

Factoring in coating efficiency, the area of bare steel is:

$A_B = A_T \times (1 - C_f)$

where:

C_f = Coating Efficiency = 0.0

$A_B = A_T \times ($ 1 - 0.0% $)$

$A_B =$ 19,788 sq. ft.

2 **Current Required:**

The amount of current required to achieve protection is based upon the total submerged surface area of the tank, the type of coating and the condition of the coating as well as a chemical analysis of the water expressed in ohm-cm.

$I_T = A_B \times C_d$

where:

C_d = Current density = 0.5 mA/sq.ft.

$I_T =$ 19,788.1 x .5

$I_T =$ 9,894 mA or **9.9 Amps**

3 **Anode Type:** Titanium Mixed Metal Oxide Wire Anode:

Dimensions:

diameter:	0.062	inches
length:	4896	inches
anode rating:	100	mA/ft

$L = I/I_A$

where:

L = Minimum Bowl Anode Wire Length (feet)
I = Total Current Required in Bowl (amps)
I_A = Anode Rated Output (amps/ft)

L= 9.9 / 0.1 (this is for anode material rated @ 100mA/ft.)

L= 99 feet (minimum length required)

408 feet - actual length utilized within system design to ensure even current distribution within the tank.

4 Rectifier Voltage Rating:

Dwight's equation for the anode's resistance to water is:

$$R = \frac{\rho \quad 0.0627}{L} \left(\ln \left(\frac{4 \times L}{r} \right) - 1\right)$$

R = Anode to Water resistance
ρ = Water resistivity = 3,360 ohm-cm
r = Anode radius = 0.031 inches
L = Anode length = 4896 inches

$$R = \frac{\rho \quad 0.0627}{4{,}896.0} \left(\ln \left(\frac{4 \times 4{,}896.}{0.031} \right) - 1\right)$$

R = 0.53 ohms

E= (I) (R) (1.5)

where:
E=IRSF

E = Rectifier Voltage (volts)
I = Required Current 9.894 amps
R = Anode Resistance 0.532 ohms
Sf = Safety Factor 50 %

E= 9.9 x .5 x 1.5

E= 7.9 D.C. Volts

5 Anode System Design Life:

$$L = \frac{Cdr \times 20}{\text{----------}}$$

Cda

where:

L = Anode Life in Years

Cdr = Rated Anode Output = 100mA/ft

Cda = Actual Anode Output (mA/ft)

C_{da} = I/L

where:

I = Maximum Current Output in mA

L= Total Length (feet) of Anode Material Actually Utilized

C_{da} = 9,894.1 / 408 = 24.3

$$L = \frac{(100)\,(20)}{24.25}$$

L = **82** **year design life**

RECTIFIERS

T.A.S.C. VIII

Automatic Rectifier

Rectifier Operation/Description

The Corrpower T.A.S.C. VIII rectifier is specifically designed to provide accurate, economical corrosion control for the submerged surfaces of steel water storage tanks and water / wastewater treatment units. The T.A.S.C. VIII is designed by NACE accredited cathodic protection engineers for optimum performance in accordance with ANSI/AWWA D104, Type A, IR Drop Free control standards. The T.A.S.C. VIII automatically monitors and adjusts the DC output required for optimum corrosion control. The T.A.S.C. VIII control unit is equipped with an automatic potential limit, which is adjusted to maintain AWWA D104-01 and NACE criteria for optimum cathodic protection corrosion control while preventing over or under protection of the coated surface. Superior design, engineering and operation provide owner/operators with long life, low maintenance performance. The standard digital display meters facilitate ease of monitoring, with performance indicator lights on the front cabinet available as an optional extra feature. Each T.A.S.C. VIII is both factory and job site tested to insure quality workmanship and performance.

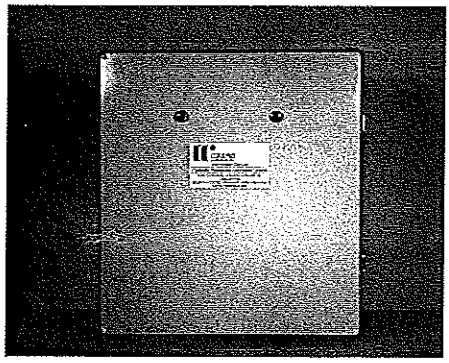

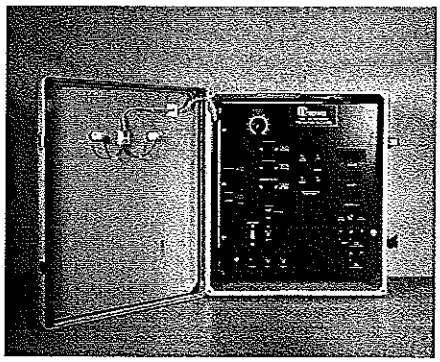

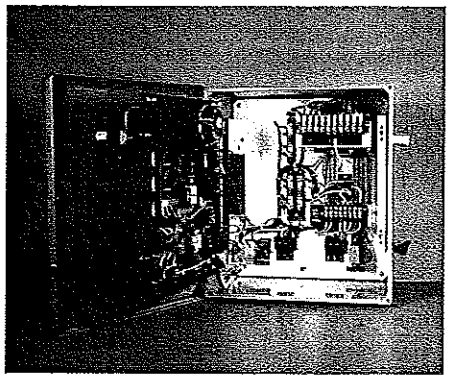

Standard Features

- Totally Automatic Control
- Eliminates "IR" Drop Error
- Controls from 0 to 100% of Rated Output
- Automatic Current Limiting
- Soft-Start Circuitry To Avoid High Power - On In-Rush Currents
- Silicon Rectifier Stacks
- Upgraded Lightning Protection (AC and DC)
- Plug In Automatic Control Circuit Board
- Manual Operation Mode
- NEMA 4X Enclosure
- High Intensity LED Digital Meters
- Individual Circuit Shunts
- CSA (Canadian Standards Association) Approved
- T.A.S.C. Status Indicator LED's On Instrument Panel:
    - o Voltage Control
    - o Current Control
    - o Potential Control
- Full Height Silk-Screened Instrument Panel

CORRPRO COMPANIES INC
For Every Corner of Your World

Waterworks Division-Sales and Operations

OHIO
1055 W. Smith Road
Medina, Ohio 44256

Phone: 330.725.6681
Fax: 330.723.6065

GEORGIA
581 Sigman Road, Suite 300
Conyers, Georgia 30012

Phone: 770.761.5400
Fax: 770.761.5410

ARIZONA
5643 N. 52nd Avenue
Glendale, Arizona 85301

Phone: 602.269.7641
Fax: 623.842.9697

Web: www.corrprowaterworks.com
E-mail: waterworks@corrpro.com

National Service Center: 800.443.3516

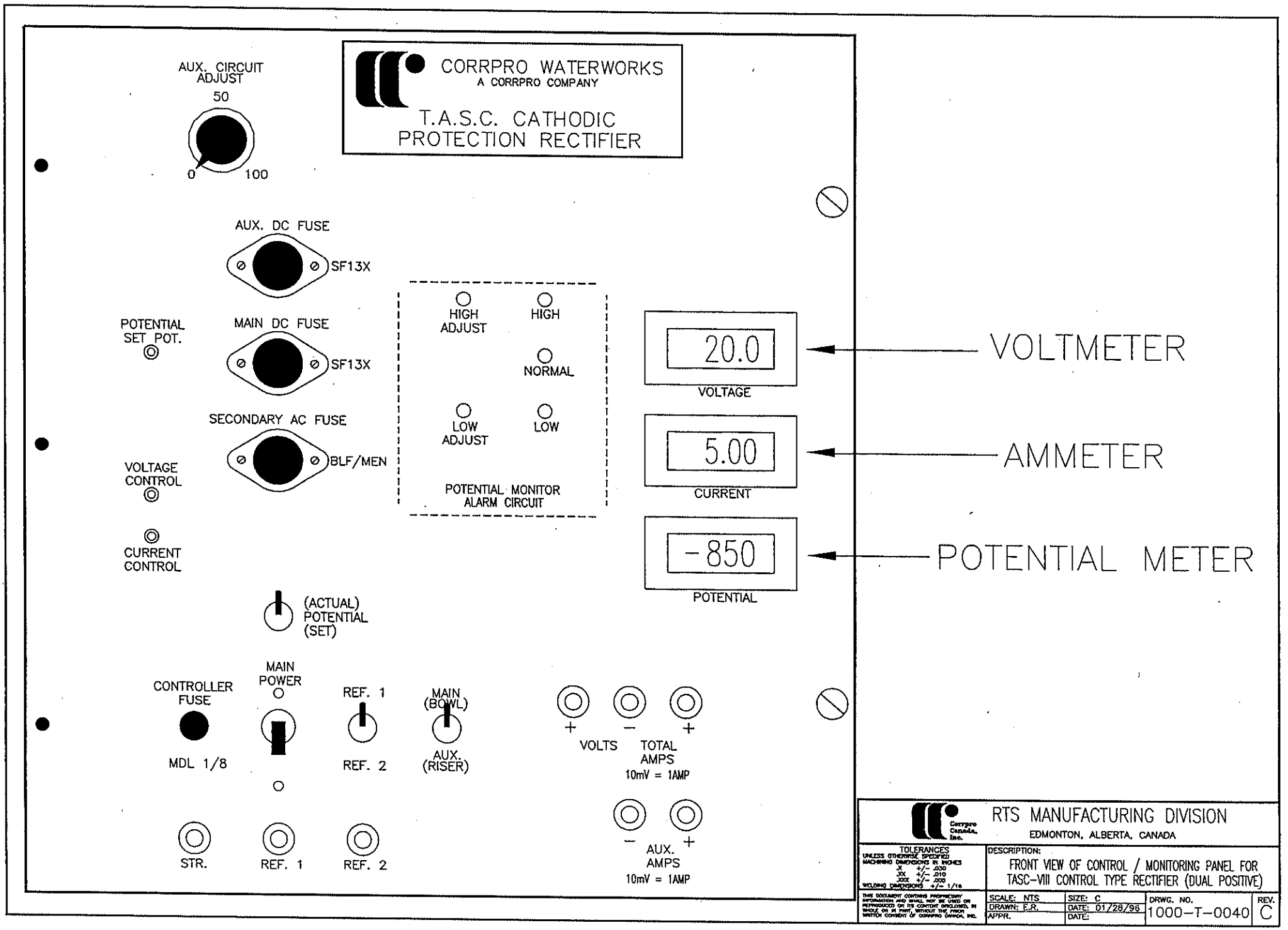
AUX. CIRCUIT ADJUST
50
0
100
CORRPRO WATERWORKS
A CORRPRO COMPANY
T.A.S.C. CATHODIC PROTECTION RECTIFIER
AUX. DC FUSE
SF13X
POTENTIAL SET POT.
MAIN DC FUSE
SF13X
SECONDARY AC FUSE
BLF/MEN
VOLTAGE CONTROL
CURRENT CONTROL
HIGH ADJUST
HIGH
NORMAL
LOW ADJUST
LOW
POTENTIAL MONITOR ALARM CIRCUIT
20.0
VOLTAGE
VOLTMETER
5.00
CURRENT
AMMETER
-850
POTENTIAL
POTENTIAL METER
(ACTUAL) POTENTIAL (SET)
CONTROLLER FUSE
MDL 1/8
MAIN POWER
REF. 1
REF. 2
MAIN (BOWL)
AUX. (RISER)
+ VOLTS −
TOTAL AMPS +
10mV = 1AMP
STR.
REF. 1
REF. 2
− AUX. AMPS +
10mV = 1AMP
RTS MANUFACTURING DIVISION
EDMONTON, ALBERTA, CANADA
TOLERANCES
UNLESS OTHERWISE SPECIFIED
MACHINING DIMENSIONS IN INCHES
X +/- .030
XX +/- .010
XXX +/- .000
WELDING DIMENSIONS +/- 1/16
DESCRIPTION:
FRONT VIEW OF CONTROL / MONITORING PANEL FOR TASC-VIII CONTROL TYPE RECTIFIER (DUAL POSITIVE)
SCALE: NTS
SIZE: C
DRWG. NO. 1000-T-0040
REV. C
DRAWN: F.R.
DATE: 01/28/96
APPR.
DATE:

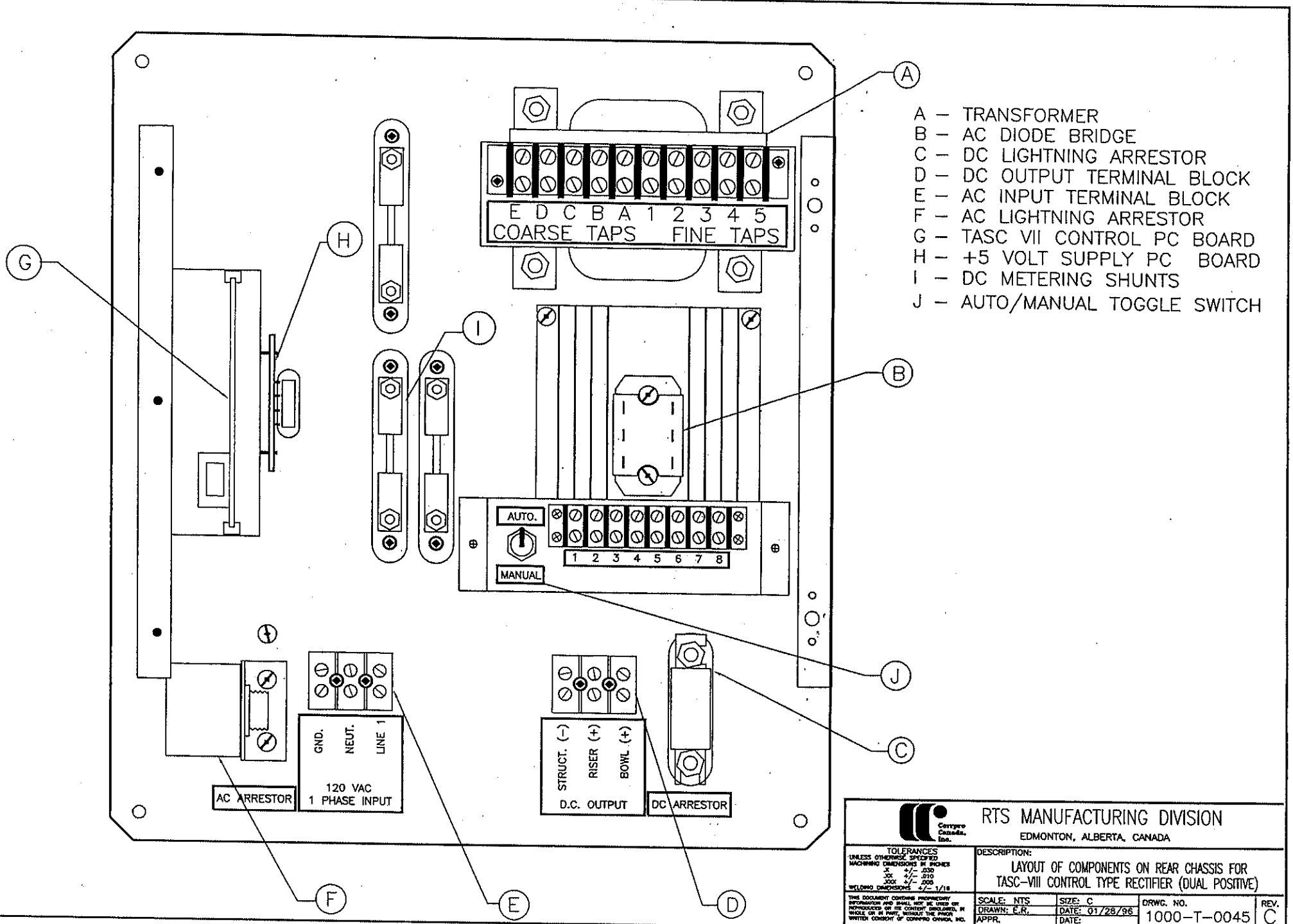

A – TRANSFORMER
B – AC DIODE BRIDGE
C – DC LIGHTNING ARRESTOR
D – DC OUTPUT TERMINAL BLOCK
E – AC INPUT TERMINAL BLOCK
F – AC LIGHTNING ARRESTOR
G – TASC VII CONTROL PC BOARD
H – +5 VOLT SUPPLY PC BOARD
I – DC METERING SHUNTS
J – AUTO/MANUAL TOGGLE SWITCH

Cornpro Canada, Inc.

RTS MANUFACTURING DIVISION
EDMONTON, ALBERTA, CANADA

TOLERANCES
UNLESS OTHERWISE SPECIFIED
MACHINING DIMENSIONS IN INCHES
X +/- .030
XX +/- .010
XXX +/- .005
WELDING DIMENSIONS +/- 1/16

DESCRIPTION:
LAYOUT OF COMPONENTS ON REAR CHASSIS FOR TASC-VIII CONTROL TYPE RECTIFIER (DUAL POSITIVE)

THIS DOCUMENT CONTAINS PROPRIETARY INFORMATION AND SHALL NOT BE USED OR REPRODUCED OR ITS CONTENT DISCLOSED, IN WHOLE OR IN PART, WITHOUT THE PRIOR WRITTEN CONSENT OF CORNPRO CANADA, INC.

SCALE: NTS	SIZE: C	DRWG. NO.	REV.
DRAWN: E.R.	DATE: 01/28/96	1000-T-0045	C
APPR.	DATE:		

NEMA 4X CABINET IS SIZED IN ACCORDANCE W/NEMA STANDARDS FOR AIR COOLING PROVISIONS.

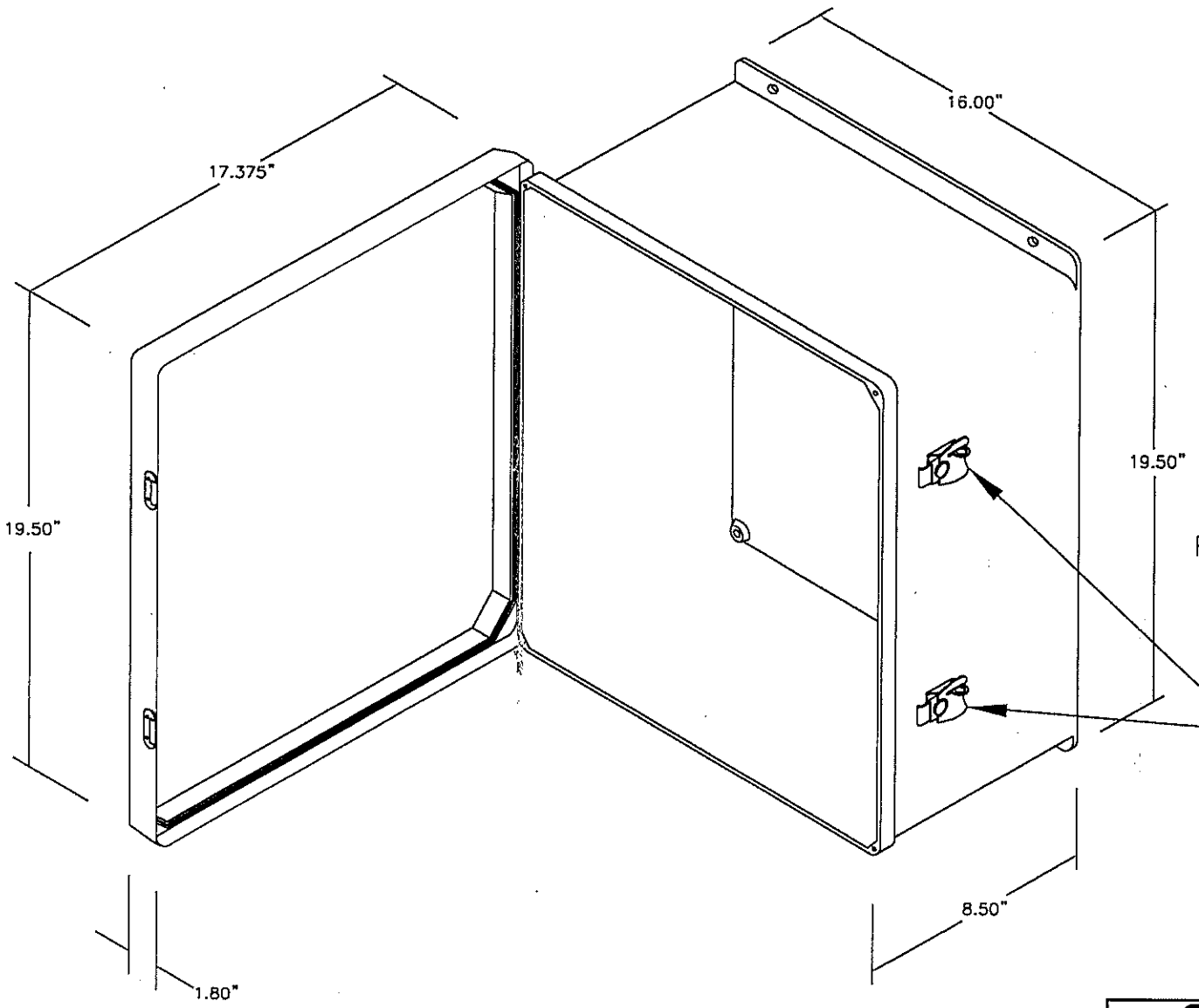

MOUNTING DIMENSIONS:
(CENTER TO CENTER)

WIDTH – 12.00"
HEIGHT – 18.75"
HOLE SIZE – 0.34" (11/32)

OVERALL CLEARANCE DIMENSIONS:

WIDTH – 18.00"
HEIGHT – 19.50"

COMPOSITION:

FRP–(fiberglass reinforced plastic)

NEMA RATING:

NEMA 4X

DUAL HASPS W/PROVISION FOR PADLOCKS

Corrpro Canada, Inc.

RTS MANUFACTURING DIVISION
EDMONTON, ALBERTA, CANADA

TOLERANCES
UNLESS OTHERWISE SPECIFIED
MACHINING DIMENSIONS IN INCHES
.X +/- .030
.XX +/- .010
.XXX +/- .005
WELDING DIMENSIONS +/- 1/16

DESCRIPTION:
LAYOUT AND DIMENSIONING OF TYPICAL FIBERGLASS ENCLOSURE FOR TASC-VIII CONTROL TYPE RECTIFIER

THIS DOCUMENT CONTAINS PROPRIETARY INFORMATION AND SHALL NOT BE USED OR REPRODUCED OR ITS CONTENT DISCLOSED IN WHOLE OR IN PART, WITHOUT THE PRIOR WRITTEN CONSENT OF CORRPRO CANADA, INC.

SCALE: NTS	SIZE: C	DRWG. NO.	REV.
DRAWN: E.R.	DATE: 01/26/96	1000-T-0050	C
APPR.	DATE:		

TASC RECTIFIER SCHEMATIC

NOTES:

1.) CONSULT RECTIFIER SPECIFICATION SHEET FOR DESCRIPTION, PART NUMBERS & QUANTITIES.

2.) SELECT SWITCH/JUMPER FOR CORRECT INPUT VOLTAGE AS FOLLOWS:
FOR 115VAC: SELECT 115 ON SWITCH OR JUMPER 1-2 & 3-4.
FOR 230VAC: SELECT 230 ON SWITCH OR JUMPER 2-3 ONLY.

3.) JUMPER "A" & "B" FOR +12VDC LAMPS.

4.) JUMPER 1-2 FOR CONTINEOUS MODE ONLY.

5.) OPTIONAL VOLTAGE PROGRAM RESISTOR: $\frac{(Vout-8.82) \times 10K}{2.60}$

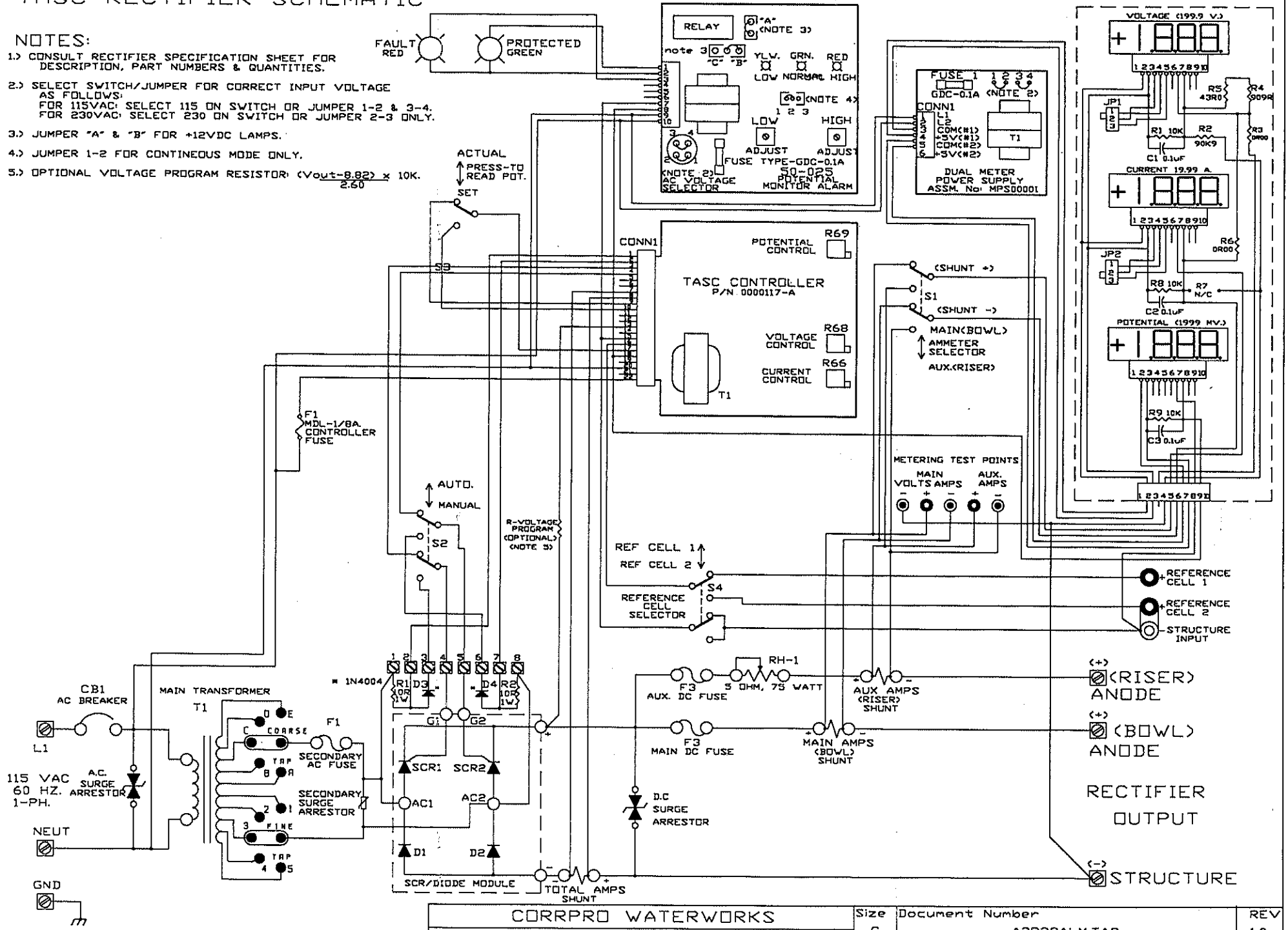

CORRPRO WATERWORKS	Size C	Document Number A2P33ALM.TAS	REV 1.0
Title TASC , 115VAC, DUAL POSITIVE	Date July 15, 1998	Sheet 1 of 1	

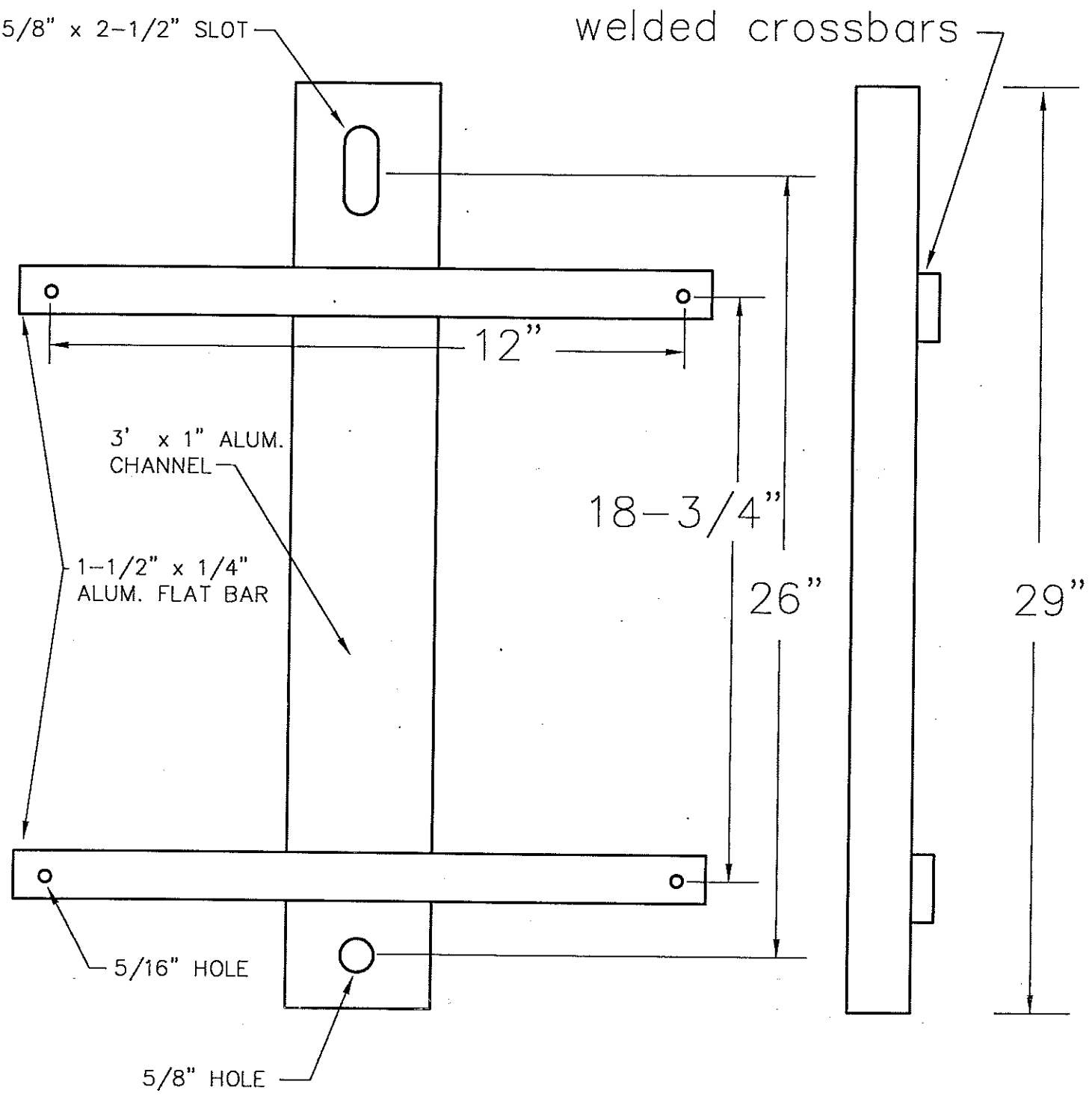

NO.	DATE	BY	REVISION

CORRPRO WATERWORKS
CLEVELAND • ATLANTA • NEW YORK • PHOENIX

DRAWN BY	MGS
DESIGNED BY	MGS
DATE	9/27/00
SCALE	NTS
SHEET	1 OF 1
DWG. No.	RECT-BKT

TASC VIII RECTIFIER ALUMINUM MOUNTING CHANNEL

(Gipson Type "B")

WATERWORKS WIRE ANODE

APPLICATIONS

- Water Storage Tanks
- Water Treatment Equipment

ELTECH™ Waterworks Wire Anode is a copper cored titanium wire with a mixed metal oxide coating. The mixed metal oxide is a crystalline, electrically-conductive coating that activates the titanium and enables it to function as an anode.

The ELTECH wire anode delivers reliable, long-life current necessary to uniformly protect water storage tanks and assorted water treatment equipment from internal corrosion.

FEATURES

- High Current Output
- Low Coating Wear Rate
- Highly Conductive Copper Core
- ANSI/AWWA Standard D 104-97

BENEFITS

- Lower cost per ampere year
- Constant electrical resistance
- Minimizes voltage drop

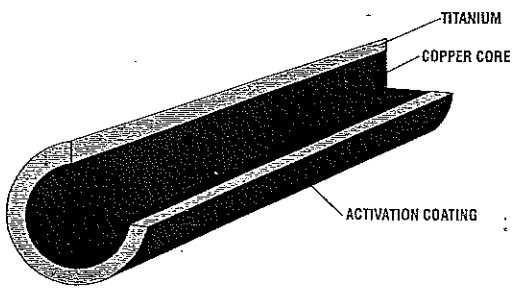

ANODE LIFE

Due to the extremely low consumption rates and dimensional stability of mixed metal oxide anodes, the electrical resistance of the ELTECH Water-works Wire Anode remains essentially constant with time.

The high current density capability of mixed metal oxide anodes have the added advantage of allowing high current overloads for initial polarization without causing harm to the anode.

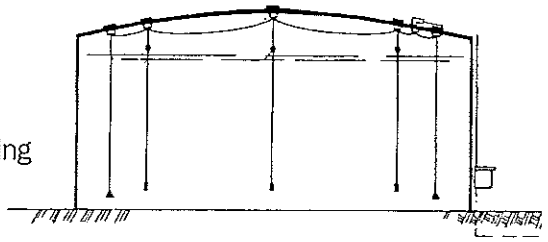

Anode life projections are accurately made using an empirical equation derived from accelerated life tests and supported by extensive field performance data.

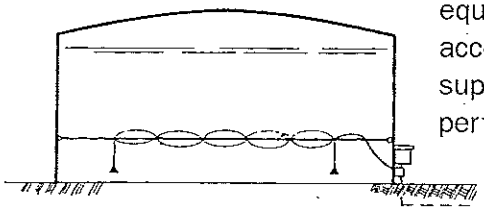

TECHNICAL SPECIFICATIONS

Rating for 20 year life (mA/ft)	100
Diameter (inches)	0.062
Maximum continuous length (feet)	1000
Resistance (milliohms/ft)	7
Weight (ounces/ft)	0.138

ELTECH Systems Corporation
Anode Technologies Group - LIDA® Products
1110 Industrial Blvd.
Sugar Land, Texas 77478
Phone: (281) 240-8686
1-800-442-5432 Telefax: (281) 240-8779

All information, recommendations and suggestions in this bulletin concerning the use of our products are based upon tests and data believed to be reliable. However it is the user's responsibility to determine the suitability for his own use of the products described herein. Since actual use by others is beyond our control, no guarantee, express or implied, is made by ELTECH Systems Corporation as to the effects of such use or the results to be obtained., nor does ELTECH Systems Corporation assume any liability arising out of use by others of the products referred to herein. Nor is the information herein to be construed as absolutely complete since additional information may be necessary or desirable when particular or exceptional conditions or circumstances exist or because of applicable laws or government regulations. Nothing herein contained is to be construed as permission or as a recommendation to infringe on any patent. ELTECH is a trademark of an ELTECH Systems Company.

Permacell®801

Permanent Reference Cell

For Accurate Readings in Fresh Water Environments

Routine monitoring is an important part of any cathodic protection maintenance program. To simplify this testing procedure, different types of permanent reference cells can be used. For structures located in fresh water areas, Corrpro offers the Permacell 801 copper/copper sulfate cell. The cell is made using a 99.99% pure copper coiled element, which is surrounded by a supersaturated solution of copper sulfate. To ensure a low-resistance connection, a lead wire is soldered and mechanically bonded to the copper element. This electrical junction is then encapsulated by a moisture-resistant material for a truly sealed connection. Electrical contact to the electrolyte is accomplished through a filtering plug at the end of the reference electrode. The plug allows accurate potential measurements to be obtained while preventing cell contamination.

In order for a reference to be effective, it must remain electrically stable over time. Corrpro's 801 reference cell delivers unsurpassed stability due to strict quality control procedures implemented during the manufacturing process. The cell is constructed in a controlled environment, totally free of contaminants. The various components used in the cell are also purified. Deionized water is used to create the supersaturated solution of copper sulfate, and the copper element is treated with a special cleansing agent before it is installed into the cell's plastic housing. Each cell is also tested for resistance and electrical potential, and the

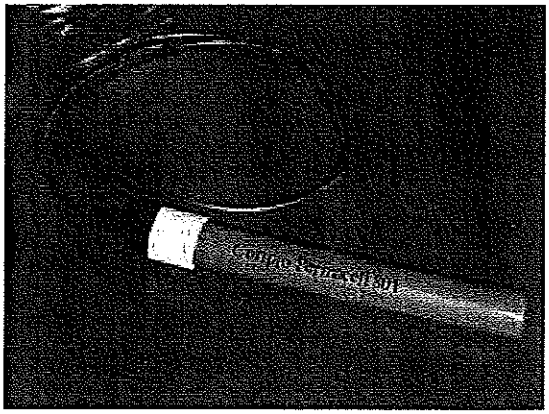

values obtained are recorded and marked on shipping tags attached to the cells. These extra
quality steps give the Permacell 801 a 10-year
design life and the ability to maintain an electrical potential of within ±5 millivolts.

Typical Applications

The Permacell 801 is ideal for use in cathodic protection systems operated in fresh water environments. This includes elevated water storage tanks, clarifiers, traveling screens, pasteurizers, locks, dams, and fresh water dock structures. The cell can be operated in temperatures of up to 135°F, but should not be used in waters containing high concentrations of chloride ions.

CORRPRO WATERWORKS
Waterworks Division
1090 Enterprise Drive / Medina, OH 44256
Tel: 1-330-723-5082 / Fax: 1-330-723-0694 / 800-443-3516
http://www.corrpro.com or http://www.corrprowaterworks.com

Permacell® 801

Permanent Reference Cell

Ordering Procedure

Permacell 801 is provided standard with fifty feet of insulated lead wire. To order this reference cell for your particular application, indicate that you need a Corrpro Permacell 801 permanent reference cell, and specify the quantity desired and the lead wire length, size, and insulation, if different from the standard provided. An example is included to help illustrate this process.

Ordering Procedure Example	
ITEM	**EXAMPLE**
Quantity	*10*
Product	*Permanent Reference Cell*
Permacell Model	*801*
Lead Wire: Length (50 ft. = Standard)	*50 ft.*
Size (#14 AWG = Standard)	*14 AWG*
Insulation (HMWPE = Standard)	*HMWPE*

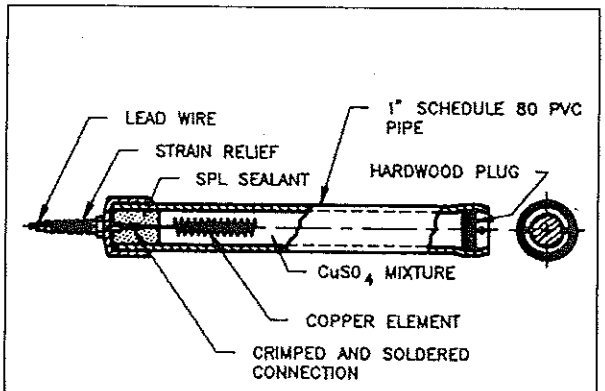

Product Specifications					
NOMINAL DIMENSIONS Ø in.	LENGTH (mm)	WEIGHT lbs. (kg)	ELECTRICAL STABILITY	MAXIMUM TEMP. °F (°C)	DESIGN LIFE
1 (25.4)	10 (254.0)	2 (0.91)	±5 millivolts with 3.0 microamp load	135°F (57.2°C)	10 years

CORRPRO WATERWORKS
Waterworks Division
1090 Enterprise Drive / Medina, OH 44256
Tel: 1-330-723-5082 / Fax: 1-330-723-0694 / 800-443-3516
http://www.corrpro.com or http://www.corrprowaterworks.com

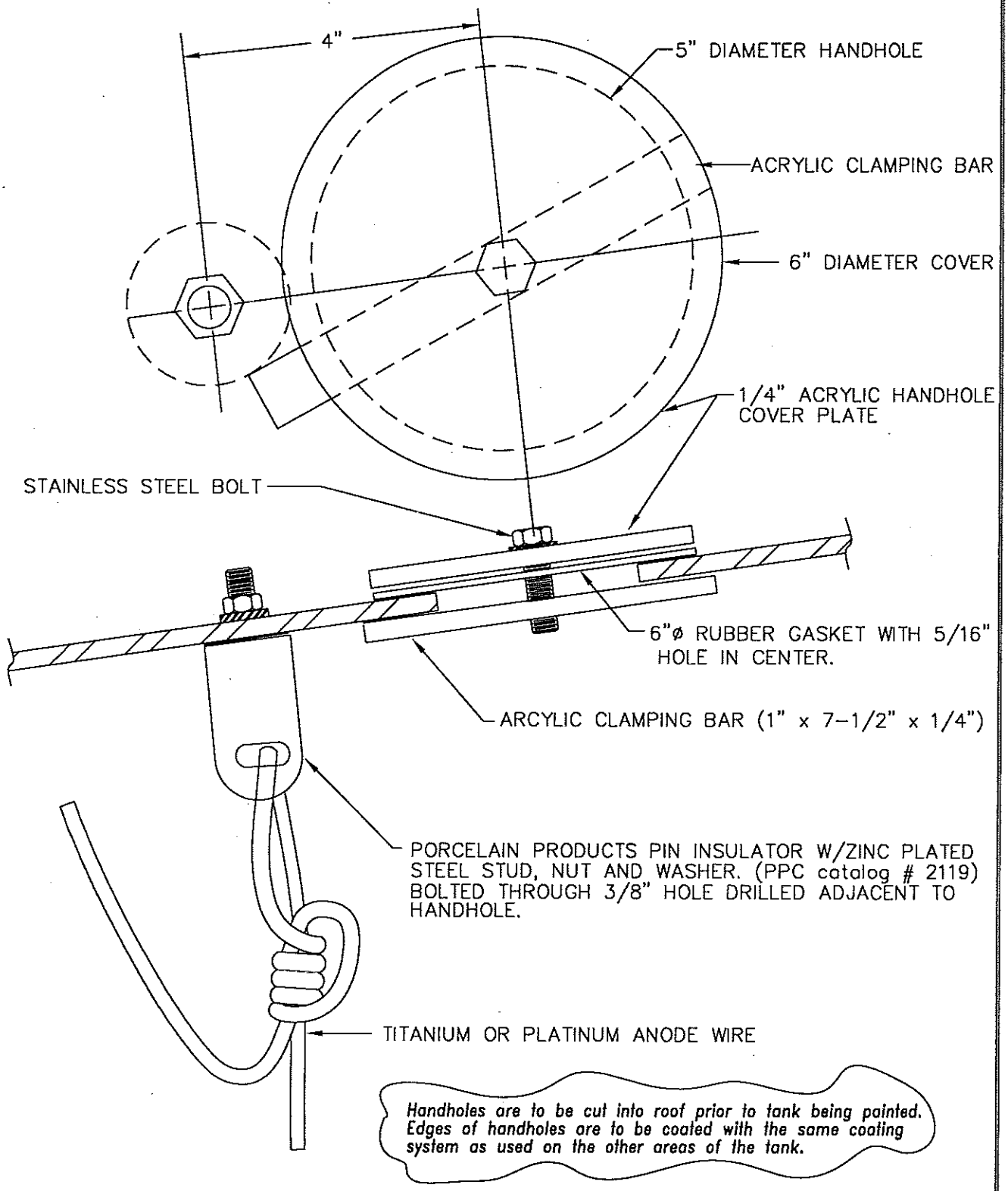

Handholes are to be cut into roof prior to tank being painted. Edges of handholes are to be coated with the same coating system as used on the other areas of the tank.

CORRPRO WATERWORKS

CLEVELAND • ATLANTA • NEW YORK • PHOENIX

DRAWN BY	MS
DESIGNED BY	MS
DATE	9/22/05
SCALE	NTS
SHEET	1 OF 1
DWG. No.	HHC-CUT1

TYPICAL CATHODIC PROTECTION HANDHOLE AND SUSPENSION DETAIL

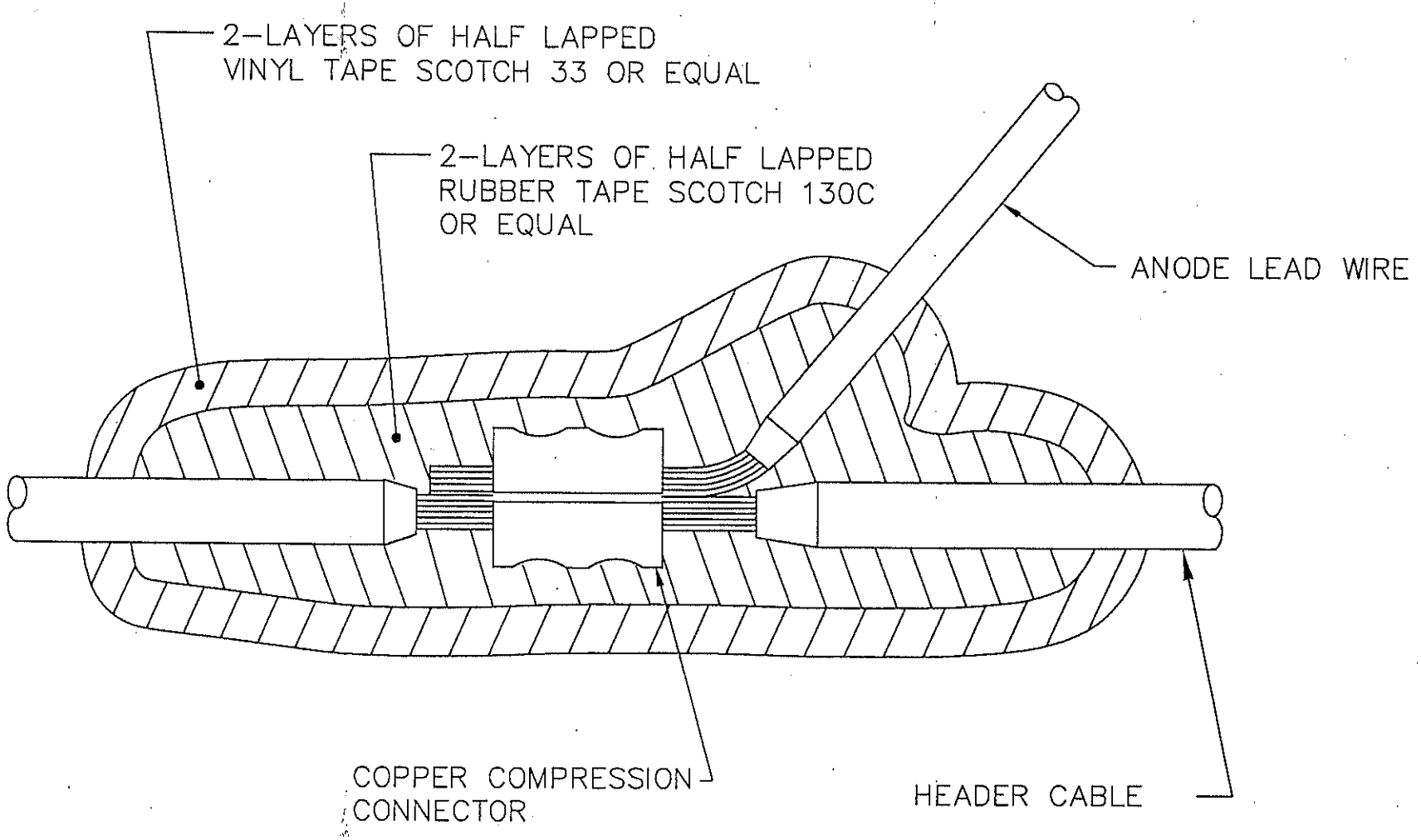

NO.	DATE	BY	REVISION

CORRPRO WATERWORKS

CLEVELAND • ATLANTA • NEW YORK • PHOENIX

DRAWN BY	M. STEELE
DESIGNED BY	M. STEELE
DATE	5/20/97
SCALE	NONE
SHEET	1 OF 1
DWG. No.	SPLICE4

COMPRESSION CONNECTOR SPLICE

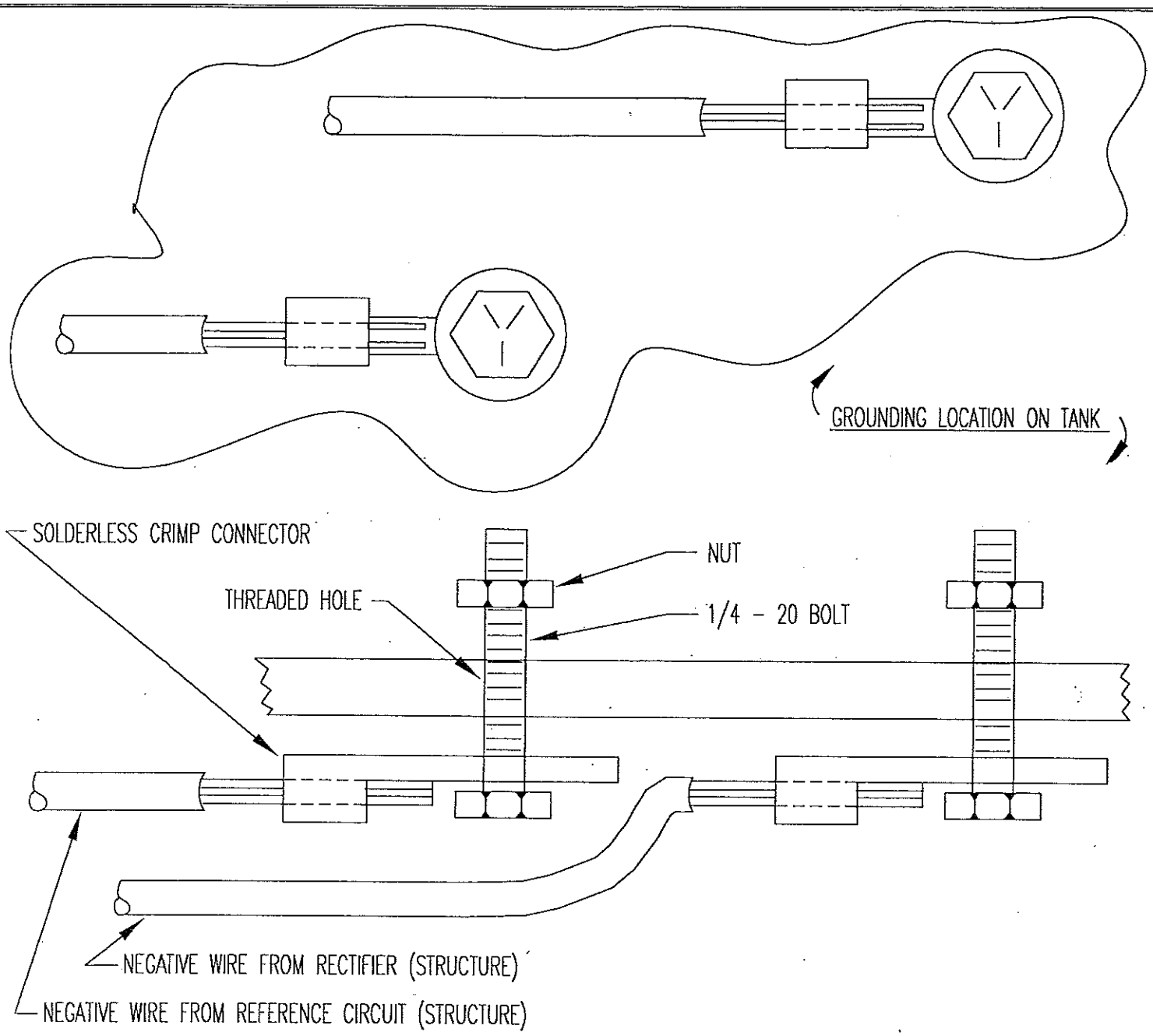

*The negative (structure) connections for the anode circuit and reference circuit shall be made by drilling & tapping a 1/4" hole into the tank at a suitable location and installing a mechanical connection as shown on this drawing. A minimum spacing of one inch between the anode & reference circuit negative connections is required. The completed connections shall be coated to prevent oxidation of the connection.

CORRPRO WATERWORKS
CLEVELAND • ATLANTA • NEW YORK • PHOENIX

DRAWN BY	M.STEELE
DESIGNED BY	M.STEELE
DATE	7/24/03
SCALE	NTS
SHEET	1 OF 1
DWG. No.	NEG-CONN

TYPICAL NEGATIVE CONNECTIONS FOR THE ANODE CIRCUIT & REFERENCE CIRCUIT

Anaconda-Ericsson Type THHN or THWN

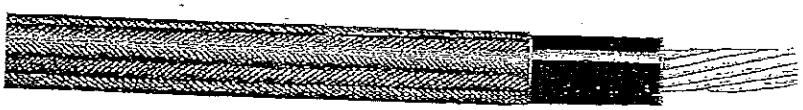

Description

Type THHN-THWN AP06201
Annealed bare copper conductor per ANSI/ASTM B3.

Solid	14AWG-10AWG
Stranded Class C	14AWG-10AWG
Stranded Class B	8AWG-500MCM

Polyvinyl Chloride, thermoplastic PVC insulation.
Clear nylon jacket over the insulation.

Specifications

UL 83 Standard for Safety for Thermoplastic insulated Wires and Cables.
AP 06201 Anaconda-Ericsson Representative for assistance in preparing specifications or selecting wire for your application.

Application

Anaconda-Ericsson Type THHN or THWN may be used for power or control circuits, in recognized raceways, in wet or dry locations and in the presence of oil, gases, gasoline and chemicals, in accordance with the National Electrical Code (NEC).

Features and Benefits

UL listed as Type THHN or THWN for general power or control wiring in accordance with the National Electrical Code.
UL listed as Type MTW for use in machine tool wiring, sized 14, 12 and 10 AWG.
UL listed as Type AWM for use in appliance wiring.
Acceptable for use in OSHA regulated installations.
UL listed as VW-1. Passes all flame tests required by UL 83.
Annealed copper conductors for easy installation and trouble free connections.
PVC insulation adheres tightly to copper conductors yet easily strips clean.
Smooth nylon jacket aids in easier pulling.
Smaller overall diameter results in greater conduit fill in old work or new work.
Resists oils, chemicals, gases and gasoline.
Stocked nationwide by leading Authorized Electrical Distributors for quick delivery.

How to Order

Order from your local Authorized Anaconda-Ericsson Stocking Distributor by AP06201 or Type THHN.

Alternative Products

Type USE-RHH-RHW

	Data Section 309
Type XHHW	Data Section 307
Durasheath EP	Data Section 401
Unicon FREP	Data Section 403

Two Conductor Twisted Pair Jacketed (Unshielded)

WEST PENN WIRE CORP.

Two Conductor
UNSHIELDED

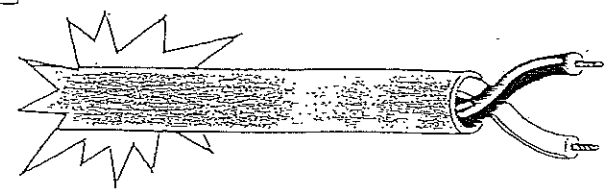

Gray PVC jacket, Copolene Insulated primaries.
Color coded Black/Red.
Catalog numbers 226 and 227; Black/White primaries.
Standard spool size: 1000 feet.

LISTED UL MISC. WIRES

Catalog Number	Number of Conductors	Awg. Size & Stranding	Insulation Thickness (Primary)	Jacket Thickness	Nom. O.D.	WPW Suggested Working Voltage
224	2	18 (7x26)	.015	.025	.225	450

PORCELAIN PRODUCTS CO.

HOUSE BRACKETS

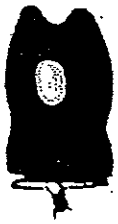

Insulators

House Bracket Insulators are the same as regular wireholders except have stud bolts for fastening to straps or back bars. Special stud lengths available on special order.

2119

Galvanized Rigid Steel Conduit

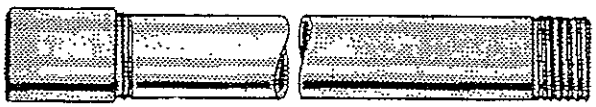

Furnished in 10 foot lengths with coupling screwed on one end. Threaded on both ends.

Our Part No.	Size Ins.	Wt. Lbs. Per 100 Ft.	Threads Per In.	Wall Thickness In.
500-003	½	80.3	14	.109
500-011	¾	106.4	14	.113
500-038	1	154.4	11½	.133
500-046	1¼	203.7	11½	.140

RC CLAMP

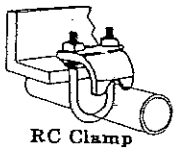

RC Clamp

For mounting pipe or conduit at right angle to the beam.

Cat. No.	Size In.	Wt. Lbs. Per 100	Our Part No. Steel City	Size In.	Our Part No. Oz-Gedney
RC-⅜	⅜	25	696-617	¾	
RC-½	½	41	586-420	½	815-527
RC-¾	¾	46	586-439	¾	815-535
RC-1	1	51	586-447	1	815-543
RC-1¼	1¼	54	683-019	1¼	815-551

3M

Scotch® Brand Electrical Tapes

Scotch® Brand

Electrical Insulating Tapes

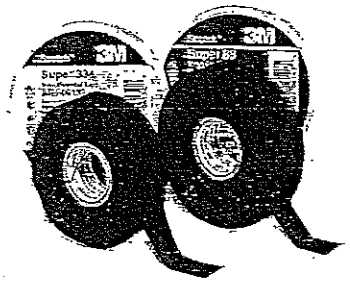

Scotch Brand Tape Ordering Information			
SCOTCH TAPE	TYPE OF TAPE	NOMINAL DIMENSIONS WIDTH in (mm)	LENGTH M/roll (M/roll)
Super 33+	Vinyl Electrical	0.75 (19)	20-66 (6-20)
130C	Linerless Rubber Splicing	0.75-2.0 (19-50.8)	30 (9.1)

Burndy

Split Bolts and Crimpits

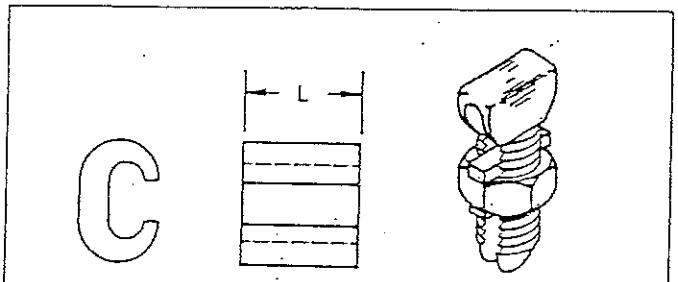

CRIMPIT SPLIT BOLT

Burndy Split Bolt Ordering Information			
CATALOG NUMBER	RANGE FOR EQUAL RUN AND TAP (AWG)	MIN. TAP WITH MAX. RUN (AWG)	RECOM. TIGHTENING TORQUE (LBS)
KS90	12 Stranded-10 Stranded	16 Stranded	80
KS15	10 Stranded-8 Stranded	14 Stranded	80

Burndy Crimpit Ordering Information			
CATALOG NUMBER	RUN (AWG)	TAP (AWG)	LENGTH (INCHES)
YC10C10	12 Solid-10 Stranded	12 Solid-10 Stranded	0.375
YC8C8	8 Solid-8 Stranded	10 Solid-8 Stranded	0.5

Underwriters Laboratories Inc.

ANSI/NSF Standard 61 - Drinking Water System Components & Materials

ANSI/NSF Standard 61 encompass products that come in contact with drinking water and/or drinking water treatment chemicals. Products covered by this standard include:

- Pipes and related products
- Barrier materials, i.e., coatings, linings
- Joining and sealing materials, i.e., adhesives, gaskets
- Process media, i.e., activated carbon, ion exchange resins
- Mechanical devices, i.e., valves, submersible pumps
- Mechanical plumbing devices, i.e., faucets, water coolers

Underwriters Laboratories Inc.®

FDNP.MH17837

Drinking Water System Components

See General Information for Drinking Water System Components

CORRPRO WATERWORKS
1055 W SMITH RD
MEDINA, OH 44256 USA

MH17837

Mechanical Devices

Trade Dsg	Water Contact Temp	Water Contact Mtl	Surface Area to Volume Ratio
Automatically Controlled Impressed Current Systems			
ACIC-(a)	23	Multiple	-
Galvanic Systems			
G-(b)	23	Multiple	-
Manually Controlled Impressed Current Systems			
MCIC-(a)	23	Multiple	-

(a) - Combinations of 1-2, 3 or 4, and 7-16. Greater than 25,000 gal.

(b) - Combinations of 1-2, 5 or 6, and 7-16. Greater than 25,000 gal.

NOTE - Poduct is classified as an entire system when using various combinations of the Corrpro Cathodic Protection System Model Components: 1. Insulated Cable/Wiring; 2. Sealer; 3. Platinized Niobium (P/N) Anode; 4.Titanium Anode; 5. Galvo-Rod Magnesium Anode; 6. Galvo-Mag Magnesium Anode; 7. Reference Cell- Permacell IHRP-801-CT; 8. Rope; 9. Pressure Entrance Fitting; 10. Floats; 11. Shock Card; 12. Rubber Gasket and Insulator; 13. Suspension Stabilizer; 14. Electrical Tape; 15. Heat Shrink Tube; 16. Cable Ties. Components of the Classified product can be replaced in the field with components that appear on the "Authorized Wetted Parts List".

Last Updated on 2004-01-05

Underwriters Laboratories Inc.®

Applicant: MH17837
CORRPRO WATERWORKS
1055 W SMITH RD
MEDINA OH 44256

Contact: Jeff Rog
phone: 330-725-6681 x 453

Manufacturer: 874056001
Corrpro Waterworks
1055 W. Smith Road
Medina, OH 44256

Authorized Wetted Parts List

(overall volume = 94,635 liters)

This document must be available for review by the UL Field Representative upon request

Part Number	Description	Tradename	Material	Surf Area/Vol cm^2/L	Wetted Area cm^2	Supplier	
001	Insulated Wire	#4 cu-HMWPE Electrical Wire	Electrical Wire - #4 Maximum Size	.2556	24194	Kalas Manufacturing, Inc.	25 Main St. P.O. Box 328, Denver, PA, 717 336-5575 17517
001	Insulated Wire	#4 cu-HMWPE Electrical Wire	Electrical Wire - #4 Maximum Size	.2556	24194	(alternate) Kris-Tech Wire Company (Rome, NY)	921 Seneca Street, P.O. Box 4377, Rome, NY 13442
001	Insulated Wire	#4 cu-RHW-2/USE-2, Electrical Wire	Electrical Wire - #4 Maximum Size	.2556	24194	(alternate) Kris-Tech Wire Company (Rome, NY)	921 Seneca Street, P.O. Box 4377, Rome, NY 13442
002	Sealer	2 Part Epoxy Sealant		0.03409	3226	Elementis Specialties (Belleville, NJ)	600 Corlandt Street, Belleville, NJ 07109
002	Sealer	Villco Wrap Vulcanizing Tape	Product # 98412 Self Vulcanizing Silicone sealing tape	0.004913	465	(alternate) TPC Wire & Cable (Independence, OH)	7061 E. Pleasant Valley Road, Independence, Ohio, 800-521-7935 44131
002	Sealer	Scotchcast Brand Resin #4	Made of part A & B	0.03408	3226	(alternate) 3M (Minnesota Manufacturing & Mining)	Electrical Products Division, 6801 River Place Blvd, Austin TX 78726
002	Sealer	82-A1 Power Cable Splice Kit	Various	One kit/ 25,000 gallons	One kit	(alternate) 3M (Minnesota Manufacturing & Mining)	Electrical Products Division, 6801 River Place Blvd, Austin TX 78726
003	Platinized Niobium Anode	Platinized Niobium Anode	.062 diameter max	0.03408	3226	Anomet Products (Shrewsbury, MA)	830 Boston TNPK, Shrewsbury, MA 01545
004	Activated Titanium Anode	Titanium Anode (.250 in. diameter max)	formula on file for 0.062 in. diameter maximum	0.03	2415	Eltech Systems Corporation (HQ)	100 Seventh Ave., Suite #300, Chardon, OH 44024
006	Magnesium Anode	GMAG Magnesium Anode	2" Diameter Max Magnesium MIC	0.6306	59677	Timminco Corporation (former Dow Corning) (Aurora, CO)	3595 Moline Street, Aurora, CO 80010
005	Magnesium Anode	GROD Magnesium Anode	2" diameter max Magnesium AZ31B	0 .6306	59677	(alternate) Timminco Corporation (former Dow Corning) (Aurora, CO)	3595 Moline Street, Aurora, CO 80010
005	Magnesium Anode	Galvo Rod Magnesium Anode	2" diameter max	0.6306	59677	(alternate) Winca Group, Inc. (Shandong, China)	One Chemical Road, Feixian, Shandong, China 273400 China
006	Magnesium	Galvo Mag Magnesium	2" diameter max	0.6306	59677	(alternate) Winca	One Chemical Road, Feixian, Shandong, China 273400

CONFIDENTIAL

CONFIDENTIAL PRODUCT INFORMATION Reviewed By:_____ ___/___/___

File_____ Vol._____ Sec._____ Page____ of____ Revised: ___/___/___

	Anode	Anode				Group, Inc. (Shandong, China)	China
008	Rope	Poly Rope	5/16 in. diameter max	.1533	14516	Legacy Lines (Cazenova, NY) (Custom Cordage)	4681 E.Lake Road, Cazenova, NY 13035
010	Float	Model 04-5623-91	Plasticized Polyvinyl Chloride	0.08522	8065	(alternate) Spongex Corporation (Shelton, CT)	6 Bridge St., Shelton, CT 06484
010	Float	Model 1100	K-50 Flotation Buoy	0.08522	8065	Cal-June (N.Hollywood, CA)	5238 Vineland Ave., N. Hollywood, CA 91601
011	Shock Cord	Shock Cord	1/2" Poly Rubber	0.06817	6452	Legacy Lines (Cazenova, NY)	4681 E.Lake Road, Cazenova, NY 13035
012	Rubber Gasket	Gasket, 6" diameter	SBR Rubber	0.05113	4839	Philpott Rubber	1010 Industrial Pky, Brunswick, OH
013	Suspension Stabilizer Model 2119	Suspension Stabilizer	Model 2119	0.03408	3226	Porcelain Products (Carey, OH)	225 N.Patterson Street, Carey, OH 43316
013	Suspension Stabilizer-Models 5107, 5116, 5119	Suspension Stabilizer	Models 5107, 5116, 5119	0.03408	3226	(alternate) Porcelain Products (Carey, OH)	225 N.Patterson Street, Carey, OH 43316
014	Electrical Tape	3M Super 33+ Vinyl Electrical Tape - No Lead	Vinyl Electrical Tape	0.009816	939	3M (Minnesota Manufacturing & Mining)	Electrical Products Division, 6801 River Place Blvd, Austin TX 78726
015	Heat Shrink Tube	ITCSN Heavy Wall Heat Shrink Tubing (ITCSN-1500)	Adhesive-Lined Polyolefin	0.004924	466	3M (Minnesota Manufacturing & Mining)	Electrical Products Division, 6801 River Place Blvd, Austin TX 78726
016	Cable Ties	Nylon Cable Ties 50 pound	Not to exceed 12" length	0.00971	919	Bay State Cable Ties	
	Magnesium Anode Assembly	Magnesium Anode Assembly	Various			CORRPRO WATERWORKS	Sand Springs
007	Reference Cell	Reference Cell	Various	0.01704	1613	CORRPRO WATERWORKS	Sand Springs
009	Pressure Fitting - 1" 4 wire (01950063)	Pressure Fitting	Various	0.01704	1613	Technical Fabrication	3227 Cottonwood School Rd. Rosenberg, TX 77471
009	Pressure Fitting - 1.25" 4 wire Flange (A129734WT)	Pressure Fitting	Various	0.01704	1613	Technical Fabrication	3227 Cottonwood School Rd. Rosenberg, TX 77471
009	Pressure Fitting-1.5" 5 wire (01950058)	Pressure Fitting	Various	0.01704	1613	Technical Fabrication	3227 Cottonwood School Rd. Rosenberg, TX 77471
009	Pressure Fitting-1.5" 6 wire (01950059)	Pressure Fitting	Various	0.01704	1613	Technical Fabrication	3227 Cottonwood School Rd. Rosenberg, TX 77471

Meets Health Effects criteria of ANSI/NSF Standard 61

CONFIDENTIAL

CONFIDENTIAL PRODUCT INFORMATION Reviewed By:_____ ___/___/___

File_____ Vol.____ Sec.____ Page____ of____ Revised: ___/___/___

UNDERWRITERS LABORATORIES INC.

An independent, not-for-profit organization testing for public safety

CORRPRO WATERWORKS
COMPANY NAME

MANUFACTURE REFERENCE No. MH17837

1055 West Smith Road
ADDRESS

CERTIFICATE No.

Medina, OH 44256
CITY, STATE, ZIP CODE

The above company is qualified under the Classification and Follow-up Service of Underwriters Laboratories Inc. to furnish Drinking Water Treatment Components Classified with respect to Standard ANSI/NSF 61.

The above mentioned company is therefore authorized to issue this Certificate for the bulk shipment of material described below as it's representation that such material is manufactured in compliance with requirements established by Underwriters Laboratories Inc. for this class of product. This Certificate does not indicate proper application or use of the material and does not apply to other material, which may be used at the location specified.

– SEE U L PLUMBING AND ASSOCIATED PRODUCTS DIRECTORY –

TRADE DESIGNATION:

CATEGORY Mechanical Devices

USE LEVEL: 25,000 Gallon Tanks or Larger

ANSI / NSF 61

DRINKING WATER SYSTEM COMPONENTS

7N53

Date of Issuance of Certificate:

Date Material Supplied:

Carrier: Waterworks Crew City/State

Description of Container: Corrpro Waterworks Crew Vehicle

Bill of Lading No. N/A

Shipped To: City/State

Signature of Authorized Person :

SECTION IV – WARRANTY

CORRPRO COMPANIES, INC.
WARRANTY CERTIFICATE

This **WARRANTY CERTIFICATE** is provided to the purchaser of Corrpro's products and/or services and is subject to Corrpro's terms and conditions applicable to such sale.

WARRANTY ON CORRPRO SERVICES

Corrpro warrants that, for the duration of the Warranty Period and subject to the other limitations herein, each Corrpro Service has been performed in accordance with Corrpro's applicable specifications, procedures, and directions for such Corrpro Service. As used in this warranty, "Corrpro Service" means service provided by Corrpro, its employees, and authorized subcontractors.

WARRANTY ON CORRPRO PRODUCTS

Corrpro warrants that, for the duration of the Warranty Period and subject to the other limitations herein, Corrpro Products will be free from defect in materials and workmanship. As used in this warranty, "Corrpro Products" means only (a) products manufactured solely by Corrpro and (b) components of cathodic protection systems installed as part of Corrpro Services. Except as stated in the preceding sentence, Corrpro does not warrant products manufactured or supplied by other parties, and purchaser shall be entitled to rely on the warranties, if any, only to the extent extended to purchaser by such other parties.

WARRANTY PERIOD

"Warranty Period" means (a) for Corrpro Services and Corrpro Products installed as part of Corrpro Services, the one (1) year period beginning the date the applicable Corrpro Services are completed; and (b) for Corrpro Products not installed as part of Corrpro Services, the ninety (90) day period beginning with the date of shipment from Corrpro. The providing of Warranty Service does not extend or restart a new Warranty Period.

WARRANTY SERVICE

Claims arising out of the above warranties must be made in writing and delivered to the Corrpro location which provided the Corrpro Services or Corrpro Products, or if such location has moved, to its new location or to Corrpro's headquarters. As a condition to Corrpro's obligations herein, the claimant must provide the warranty certificate and original invoice applicable to such Corrpro Product or Corrpro Service and shall set forth the specific circumstances of the claim in reasonable detail. Any claim not made within the applicable Warranty Period shall be conclusively deemed waived by claimant.

Corrpro's obligation to honor its warranty on defective Corrpro Services is in all cases limited to, at Corrpro's sole option: 1) re-performing such Corrpro Service, 2) performing additional Corrpro Service, or 3) providing a refund or credit. Notwithstanding anything herein to the contrary, the value of the foregoing shall in no event exceed the amount paid for the original Corrpro Service.

Corrpro's obligation to honor its warranty on defective Corrpro Products is in all cases limited to, at Corrpro's sole option: 1) repair or replacement of the defective Corrpro Product or component thereof, or 2) providing a cash refund or credit. Notwithstanding anything herein to the contrary, the value of the foregoing shall in no event exceed the amount paid for the original Corrpro Product. Replaced Corrpro Products shall become the property of Corrpro. Corrpro shall not be liable for any expense incurred by purchaser in order to remedy any warranted defect.

RELIANCE ON PURCHASER'S REPRESENTATIONS

Corrpro shall be entitled to rely on representations made by or on behalf of Purchaser that all conditions necessary for the proper installation or performance of Corrpro Products, systems, materials, components and Corrpro Services have been satisfied, except to the extent Corrpro is specifically contracted to make such determination. Corrpro shall have no liability for any and all claims, losses, and causes of action arising out of, resulting from, or in any way attributable to failure of Purchaser to satisfy such conditions, Purchaser's failure to advise of existing site conditions affecting the work (including, but not limited to, the location of subsurface or concealed structures, systems or components thereof), or the use or operations of products, materials, or systems subsequent to any transfer to any third party. Corrpro makes no representations or warranties with respect to, and disclaims liability arising out of, products or services sold by purchaser.

DAMAGE AND SUBSEQUENT EVENTS

Corrpro shall have no obligation to provide warranty service and shall have no liability with respect to defective Corrpro Services or Corrpro Products if the Corrpro Products, materials, systems of which they are a part, or structures they are intended to protect from corrosion have: 1) been modified, altered, relocated (in the case of cathodic protection systems), used for other than intended purposes, or otherwise changed without Corrpro's written consent; 2) been damaged or abused; 3) not been operated or maintained in accordance with design specifications, instructions, operations and maintenance documents, or reasonable business practices; or 4) in the case of Corrpro Products or Corrpro Services, not been paid for in full.

NO RELIANCE ON OTHER STATEMENTS

This warranty is the sole warranty offered by Corrpro. No statement or affirmation by or on behalf of Corrpro by words or actions other than as set forth herein shall constitute a warranty, and Purchaser shall not be entitled to rely on any oral or written statement including those of any employee, agent, or representative of Corrpro as being part of the terms and conditions of this warranty or of doing business unless such statement is in writing signed by a vice president of Corrpro.

RISK ALLOCATION

Corrpro does not represent, warrant, or otherwise guarantee that any product, material, or system sold is failure proof. Corrpro does not insure results and the prices charged reflect that an allocation of risk is being made. It is the responsibility of purchaser to maintain such insurance as is required under the circumstances.

LIMITATION OF LIABILITY/SOLE REMEDY

THE WARRANTIES PROVIDED ABOVE ARE IN LIEU OF ANY AND ALL OTHER WARRANTIES, CONDITIONS, AND LIABILITIES, EXPRESSED OR IMPLIED, INCLUDING BUT NOT LIMITED TO ANY WARRANTIES OF MERCHANTABILITY OR FITNESS FOR ANY PARTICULAR PURPOSE. PURCHASER AND SELLER EXPRESSLY AGREE THAT THIS WARRANTY SHALL SERVE AS PURCHASER'S SOLE AND EXCLUSIVE REMEDY WITH RESPECT TO PRODUCTS AND SERVICES PROVIDED BY CORRPRO, ITS EMPLOYEES OR AUTHORIZED SUBCONTRACTORS. IN NO EVENT WILL CORRPRO BE LIABLE TO PURCHASER, ITS AFFILIATES, SUCCESSORS, ASSIGNS OR TRANSFEREES OR TO ANY THIRD PARTY (BY VIRTUE OF CONTRACT, TORT (INCLUDING NEGLIGENCE), WARRANTY, STRICT LIABILITY OR OTHERWISE) FOR ANY INCIDENTAL, CONSEQUENTIAL, EXEMPLARY, PUNITIVE OR, EXCEPT AS PROVIDED HEREIN, SPECIAL DAMAGES (INCLUDING WITHOUT LIMITATION LOST PROFITS OR OPPORTUNITIES) ARISING OUT OF OR IN ANY WAY RELATED TO THE PRODUCTS OR SERVICES SUPPLIED, ACTS OR OMISSIONS IN CONNECTION WITH ANY AGREEMENT RELATED TO THE WARRANTIES CONTAINED HEREIN, OR PRODUCTS, MATERIALS, OR SERVICES PROVIDED BY CORRPRO UNLESS EXPRESSLY AND EXPLICITLY PROVIDED FOR HEREIN OR IN WRITING SIGNED BY AN AUTHORIZED OFFICER OF CORRPRO OR AS OTHERWISE REQUIRED BY LAW. THE WARRANTY PROVIDED HEREIN SHALL EXTEND TO THE FIRST PURCHASER OF SUCH GOODS OR SERVICES FROM CORRPRO AND SHALL NOT BE ASSIGNED OR TRANSFERRED.

Corrpro Companies Incorporated

"A Commitment to Excellence"

SECTION V – UNDERSTANDING CATHODIC PROTECTION

SECTION V

UNDERSTANDING CATHODIC PROTECTION

To have an effective cathodic protection maintenance program, it is important that personnel responsible for monitoring understand the basic principles on how the systems work. This section of the manual is devoted to giving these persons a better understanding of why metals corrode and how cathodic protection achieves corrosion control.

When metals are made they must first be recovered from the environment in their natural state. An example of this is that iron is mined in the form of iron-oxide or rust. This oxide is then processed through refining and heating to form steel. The steel is then molded into plates and other structural configurations. When this steel is placed in the environment, however, it immediately wants to revert back to its original state or, rust. The process by which the steel reverts to rust is known as corrosion.

When steel corrodes it releases the energy it acquired when it was refined. This energy is released in the form of electrical current discharged into the water.

The release of energy is the result of reactions the steel has with the surrounding environment. For instance a steel tank may corrode due to differences in water resistivity or temperature because of varying oxygen levels, or when it is connected to other metals such as copper. Each small amount of energy released causes iron particles to leave the tank's surface. These particles accumulate and eventually form visible rust nodules.

To control corrosion, the release of electrical energy from the metals surface must be stopped. This can be accomplished in a number of ways, which includes coatings and cathodic protection. Coatings are commonly used in essence, to separate the metal from the environment. Thus, the metal cannot react or corrode. However, no coating is perfect and small flaws develop. These flaws, commonly called holidays, are the result of damage during transportation, installation and other work being performed on the tank, as well as imperfect applications. Since the metal is exposed, corrosion will be initiated at each of these flaws.

To control corrosion at coating flaws and on bare structures cathodic protection is commonly applied. Cathodic protection is a method in which current is applied to the metal surface from the water. When this applied current equals or exceeds the current leaving the metal's surface, corrosion is stopped. The current is applied from an expendable anode placed in the water in the proximity of the structure protected.

All cathodic protection systems pass current through the water from anodes connected to the structure that is to be protected. Two basic means are employed. Sacrificial anode material, such as magnesium or zinc, is used to create a galvanic cell. Such anodes are self-energized and are connected directly to the structure to be protected. These anodes are usually used where it is desirable to apply small amounts of current to achieve corrosion control.

The other basic method employs anodes energized by a direct current power supply known as a rectifier. This method, commonly referred to as "impressed current", employs relatively inert anodes (usually titanium, platinum, or high-silicon cast iron) connected directly to the positive terminal of the rectifier, with the structure being protected connected to the negative terminal. D.C. current is then forced from the anodes to the structure. These systems are generally used where large amounts of current are required, such as storage tanks, and water treatment vessels.

The cathodic protection equipment to be used in any given cathodic protection system is also of utmost importance. A wide selection of rectifiers are available, including air-cooled, oil-immersed, and automatic units. The range of voltage and amperage output is almost infinite. Selection should be based on the particular requirements of the "project", as determined by thorough engineering.

Anodes, which serve to distribute the direct current into the water, are manufactured from various metals. High-silicon cast iron, platinum, titanium, magnesium, aluminum, and zinc alloys are commonly used. Each has its own particular application, and the engineering of their usage is a determining factor in the success or failure of the cathodic protection system.

Through proper engineering practices, material and system selection, and installation and maintenance procedures, cathodic protection can extend the useful life of any structure being protected.

SECTION VI – RECTIFIER SURVEILLANCE

SECTION VI
RECTIFIER SURVEILLANCE

A. CRITERIA

Ensure the rectifier is operable and that output levels are within accepted target values.

B. EQUIPMENT

1. High-input impedance voltmeter with 1 to 100 VAC and 0 to 100 VDC scales. The following meter is approved.

    a. Beckman Model HD-100

C. SEQUENCE

Data shall be obtained on a monthly basis to ensure proper operating status. A written record of the monthly operating status shall be maintained. A monthly log sheet is provided within this manual for your use.

D. RECORDING

All pertinent rectifier data shall be recorded on a "Rectifier Maintenance" sheet on a monthly basis. These forms shall be dated and signed, and any changes or unusual circumstances that may have had an influence on the readings shall be noted.

E. MALFUNCTION

A malfunction is indicted when output levels are outside the target values given on the rectifier maintenance sheets. In the event an abrupt change in rectifier output level occurs or the rectifier becomes inoperable, utilize the rectifier troubleshooting information contained within this manual. If the problem persists, notify Corrpro Waterworks.

F. SUMMARY

The rectifier unit converts AC power to DC power which is supplied to the impressed current anodes situated inside the water tank. This current is then discharged from the anodes, travels through the water to the metallic tank, and then returns to the rectifier via the negative cables attached to the tank. Rectifier surveillance is required to ensure that the rectifier unit operates on a continuous basis at desired output levels.

G. PROCEDURE

1. Rectifier Surveillance

a. Record the rectifier voltage and amperage values as indicated by the corresponding meter. These meters are mounted on the panel board within the rectifier cabinet.

b. Open all rectifier doors and ensure the unit is relatively clean and free of debris.

c. The voltage output is measured directly by reading across the output lugs with a standard voltmeter. Current output is measured indirectly by reading across the calibrated shunts provided within each rectifier with the same portable voltmeter. The rating of each shunt is embossed on the shunt bar.

d. Record any adjustment to the rectifier output in terms of the final transformer tap settings or potential set point. These changes should only be made at the direction of a qualified corrosion engineer.

WATER TANK POTENTIAL MONITORING

A. CRITERIA

Tank-to-water potentials between -0.85 volts (-850 millivolts) and -1.10 (1100 millivolts) with respect to a copper-copper sulfate reference electrode at all points tested.

B. EQUIPMENT

1. High-input impedance 20 mega-ohm minimum DC voltmeter with a 0-2 volt full scale meter (digital or analog acceptable). The following meters are approved:

    a. M.C. Miller Model LC-4
    b. Beckman Model HD-100
    c. Fluke DVM

2. A freshly charged copper-copper sulfate reference electrode with a 50' (min.) lead wire. The following are approved:

    a. Corrpro Waterworks IHRP-801 Permacell
    b. Tinker & Rasor - Model 8B or 6A

3. Two (2) five-foot long test leads, one end equipped with "banana" plugs for connection to the voltmeter and the other end with "alligator" clips.

C. SEQUENCE

Testing shall be conducted quarterly by the facility maintenance personnel to ensure the effectiveness of the cathodic protection systems afforded the water tanks. Annually a survey should be performed by a qualified corrosion engineer.

D. RECORDING

Test measurements are to be recorded. This form must be dated, and any activities that may have had an influence on any of the measurements shall be noted on this sheet. Quarterly readings are to be obtained at the surface, middle and bottom from each of the tank manways.

E. TEST FAILURE

In the event the test measurements do not meet the accepted criteria, investigate to determine the cause. Possible reasons for test failures would include inoperable rectifiers, severed anode cables, or depleted anodes. Check the rectifier associated with the tank evaluated. If attempts to correct these deficiencies fail, notify Corrpro Waterworks.

F. SUMMARY

Cathodic protection current shifts the tank-to-water potentials in a more negative direction, this test is to verify that sufficient current is being received by the internal submerged tank walls.

G. PROCEDURE

1. Water Tank

a. Locate the tank as noted on the quarterly survey sheets.

b. Climb the tank ladder and open the manway atop the tank.

c. Connect the copper sulfate reference cell to the 50' lead wire. Tape the connection with rubber tape & vinyl tape to ensure the threaded copper portion of the cell does not contact the water.

d. Lower the reference cell into the water to the bottom of the tank. Connect the negative lead of the voltmeter to the lead wire on the reference cell.

e. Connect the positive test lead of the voltmeter directly to the rim of the manway. Clean the metal to ensure good contact is made.

f. Turn the voltmeter "ON" and to the 2 volt D.C. scale. Record the potential at the bottom of the tank, halfway to the surface, and at the water surface.

g. This procedure is to be repeated at each of the water storage tanks on a quarterly basis.

2. Special Notes

a. Copper-copper sulfate reference electrodes are usually received in a dry condition from the supplier. It will be necessary to fill the cell with distilled water before using. (Fill to within approximately one inch of the top).

b. Examine the cell regularly, keeping the liquid level full. When the copper rod becomes badly discolored, discard the solution, sand the copper rod to bright copper, and add new $Cu/CuSO_4$ crystals and distilled water. Sufficient $Cu/CuSO_4$ crystals should be added to obtain a saturated solution.

c. When not in use, keep the cell's porous tip covered.

SECTION VII – RECTIFIER TROUBLESHOOTING

SECTION VII

RECTIFIER TROUBLESHOOTING

Adherence to maintenance and periodic testing program as previously described will greatly reduce the possibility of ultimate rectifier failure. However, failures may occur. The following procedures are recommended to enable maintenance personnel to find and repair troubles rapidly in order to maintain cathodic protection on the water storage tank.

1. Precaution:

   The following precautions should be observed when troubleshooting rectifiers:

   a. Turn the rectifier off when handling components within the rectifier. Turn off the circuit breaker at the AC panelboard and at the rectifier cabinet.

   b. Check the rectifier-wiring diagram **before** starting to troubleshoot.

   c. Make certain that meters used in troubleshooting are properly connected. The voltmeter should be connected across the points where the voltage is to be measured while the ammeter should be placed in series with the circuit being tested. A millivoltmeter should be connected across the terminals on the rectifier shunt. Correct polarity must be observed when using DC instruments.

2. Procedures:

   Most rectifier troubles are simple and do not require extensive detailed troubleshooting procedures. Most common problems are: blown fuses, faulty meter, loose terminals, open anode leads, and lightning strike damage. These troubles are usually found by a simple visual inspection of the rectifier.

   For more difficult troubles, however, it is usually better to systematically isolate the rectifier components until the defective part is found. This may be done as follows:

   a. Check to see whether voltage is being applied to the rectifier by placing the leads from an AC voltmeter across the line side of the circuit breaker.

   b. Check across the load side of the circuit breaker to determine whether it is defective. The voltage should be the same as that of the line side.

c. With an AC voltmeter, check the transformer secondary windings to determine whether voltage is present. If the circuit breaker trips, indicating a short circuit, the transformer may be isolated from the DC circuit by removing the secondary tap changing link bars or wires. If the circuit breaker continues to trip, check for possible shorts within the transformer. If it no longer trips, the short is not in the transformer, but either in the rectifier stack or in the DC circuit.

d. Measure the AC voltage supplied to the rectifier stack. This voltage should be the same as that measured at the transformer secondary. If AC voltage is present at the transformer secondary but not at the stack AC terminals, check the leads from the transformer to the stack as follows: Place the AC voltmeter leads between the transformer secondary and the stack. If no voltage is present, the lead between the two is probably open. Verify by measuring the AC voltage.

e. If the circuit breaker trips, the stack may be isolated from the rest of the DC circuit by removing one or both of the DC leads. If the breaker continues to trip, the stack is defective and should be replaced.

f. If the circuit breaker does not trip when a DC lead on the stack is removed but does trip when it is connected, the short circuit is probably in the anode circuit or structure leads. This may be verified by removing one of the external leads from the rectifier and turning the rectifier on again.

g. If DC voltage is present at the stack but not at the rectifier output terminals, check for loose connections or open leads between the stack and the positive terminal or between the stack and the negative terminal. This may be done by measuring the DC voltage between the positive and negative at the stack and between the positive and negative output terminals.

h. If DC voltage is present at the rectifier output terminals but no current is flowing, there is an open circuit in one of the external DC leads.

i. Faulty meters may cause the rectifier to appear defective when it is actually operating. The meters may be checked with portable meters known to be accurate.

3. Troubleshooting Techniques:

Many rectifier problems have symptoms that are obvious; however, the obvious should never be overlooked. Loose connections, signs of arcing, strange odors, etc., indicate troubles that do not require elaborate test procedures to uncover. Some helpful troubleshooting techniques are:

If no output voltage or current is present, the trouble and remedy may be:

a. Breaker tripped (or fuse blown):

(1) If apparently due to steady overload, reduce the output slightly.

(2) If the breaker trips repeatedly even with the output reduced, the cause may be a short circuit in some component. Isolate the component as described before and repair or replace.

(3) If the breaker trips occasionally for no obvious reason, the cause may be:

(a) Line voltage surges.

(b) Intermittent short-circuits. Isolate the component as described before. Check for loose brackets or connections. Check with ohmmeter while moving leads, etc. (Make certain power is turned off when using the ohmmeter).

b. No AC line voltage. Check the AC breaker. Do not overlook the possibility that the AC panel board circuit breaker may have tripped.

c. Open circuit in some component or connection:

(1) Check all connections, fine and coarse transformer tap adjustments, and stack connections.

(2) Rectifier stacks. Use an AC voltmeter to see if voltage is applied to the stacks. If so, they may be open-circuited and should be checked with an ohmmeter and possibly replaced.

d. Defective meters. Check the wires between the meters and the calibrated shunt and output lugs. If the wires are intact but the problem persists replace the meter.

e. Defective transformer. If AC line voltage is applied to the primary but none is present at the secondary, check to see whether there is an audible hum coming from the transformer. If so, the primary is operating but the secondary is probably open.

f. Circuit breaker. If the contacts do not close, they should be repaired or the breaker replaced.

SECTION VIII – INSTRUCTIONS FOR TASC RECTIFIERS

CORRPOWER
RECTIFIER DIVISION

OPERATING MANUAL

FOR

TASC-VIII
IR DROP FREE RECTIFIERS

DISTRIBUTED BY
CORRPRO COMPANIES, INC.

NORTH

OHIO
1055 W. SMITH ROAD
MEDINA, OH 44256
(330) 725-6681
FAX: (330) 723-6065

SOUTH

GEORGIA
581 SIGMAN ROAD, SUITE 300
CONYERS, GEORGIA 30013
(770) 761-5400
FAX: (770) 761-5410

WEST

ARIZONA
5643 N. 52ND AVE.
GLENDALE, AZ 85301
(602) 269-7641
FAX: (623) 842-9697

INSTRUCTION MANUAL

FOR

TASC VIII
CATHODIC PROTECTION RECTIFIERS

TABLE OF CONTENTS

	PAGE
INTRODUCTION	1
DELIVERY INSPECTION	1
THE I.R. DROP ERROR PROBLEM	2
PRINCIPLES OF OPERATION	2
SPECIFICATIONS	3
GENERAL INSTALLATION	4
TASC INSTALLATION	5
OPERATION	6
MAINTENANCE	7
TROUBLESHOOTING	8

SCHEMATIC AND OTHER CUSTOMER DATA IN BACK OF MANUAL

INTRODUCTION:

Corrosion of submerged surfaces in water treatment facilities and other areas is a process which is continuous 24 hours per day, 365 days per year; and protection must also be continuous to effectively combat corrosion. Correct selection, installation and operation of a cathodic protection system is important, as severe corrosion could result from interruptions in protection. The TASC VIII rectifier is a reliable, cost effective device which has been specifically designed for this purpose.

The TASC VIII unit is an improved version of the latest generation of a patented, proprietary rectifier / controller system used to automatically control the structure-to-reference potential of a cathodically protected structure. All TASC systems have featured the unique ability to monitor the instant-off structure potential and make use of it to control the cathodic protection current. Early TASC units achieved this by turning off the rectifier output for several half cycles of the AC waveform on a periodic basis (approximately every half second). The TASC VIII units monitor the structure potential every half cycle of the AC input waveform (120 times a second) and thereby provide an output which appears to be continuous. This achieves a reasonably stable output meter display as well as a greater degree of potential control.

Additional technical information outside the scope of this manual is available from Corrpro Companies, Inc., located in convenient areas across the U.S.A., Canada and overseas. When requesting information or ordering parts for this rectifier unit, please specify the serial number and model number.

Rectifiers manufactured by Corrpro Companies, Inc., Corrpower Rectifier Division are guaranteed against defects in design, workmanship or material for a period of one year as described in our catalog. In the event of a problem, the obligation of Corrpro Companies, Inc., Corrpower Rectifier Division is limited to the repair, adjustment or replacement at our factory of any rectifier or part thereof, which shall be found defective upon examination.

DELIVERY INSPECTION:

Rectifiers received in damaged condition should be accepted, a notation made on the freight bill and a claim made to the carrier. Always check rectifier thoroughly after receipt (regardless of expected installation date) as external and/or internal damage must be reported to the carrier immediately. When making a claim to a carrier, all cartons and/or crates should be saved in original condition for inspection by the carrier. Permission must be granted by Corrpro Companies, Inc., Corrpower Rectifier Division before the return of any rectifiers for repairs.

amount (0.6 volts for example). When the rectifier is turned on, the output voltage will immediately rise to its full rating for the particular tap setting. This may be less than the rated voltage of the rectifier if the taps are at less than the full setting. The structure-to-reference potential as measured by the sampling circuit (indicated on the potential meter) will increase smoothly from zero to a value greater than the set potential value. After a few seconds the structure-to-reference cell potential will decrease slowly to the set potential value. The structure-to-reference potential measured by the meter will increase from zero even though the actual potential begins at about 0.6 volts. This is because the capacitor where the "sample" is "stored" discharges to zero when the rectifier's power is shut off. When the sampled structure-to-reference potential becomes equal to the set potential, the output voltage and current will decrease to a level necessary to maintain the sampled structure-to-reference potential at the set potential value. The value of the measured (sampled) structure-to-reference potential when the unit is turned on will depend greatly upon the tap setting. As mentioned in the operation section, the tap setting should be no higher than necessary to provide the desired protection for all conditions which are anticipated between service checks on the rectifier. If the structure-to-reference potential takes more than 20 seconds to reach the set potential value, then the tap setting could be increased unless it is known that the particular structure will polarize slowly.

The current limit characteristic was explained briefly in the operating section. The principle of its operation is such that the output of the unit is controlled to maintain the structure-to-reference potential at the set potential level providing the current required does not exceed a safe value. Once the limit value of current is achieved, command signals for additional current from the reference cell circuit are ignored. The current limit value is constant from 100% conduction time of the SCR down to a 50% conduction time. If the load resistance decreases further, the current limit value decreases as well. It is approximately 10% of the rated output current under a short-circuit condition. The current limit feature was designed in this fashion so that peak instantaneous currents through the SCR's will not exceed safe limits.

One feature of the potential input circuit is that a discontinuity in the reference cell input lead causes the rectifier to react just as though the structure-to-reference potential were very high. Thus, the rectifier output will reduce to a minimum.

SPECIFICATIONS:

The TASC VIII controller can be used to control virtually any level of output power. Typically, TASC VIII cathodic protection rectifier systems are not required above 100 V and/or 100 amps, although larger units are possible. The controller itself can therefore be used on a wide range of rectifier sizes. The controller has the following specifications:

THE I.R. DROP ERROR PROBLEM:

A real problem exists in impressed current cathodic protection systems in which the structure-to-reference cell potential is used to continuously control the output of the rectifier. The desired structure-to-reference potential is electronically compared to the actual structure-to-reference potential generated by the cathodic protection current. An error exists in the structure-to-reference potential as normally measured and is proportional to the product of the current and the resistance through the electrolyte, between the structure and reference cell. The only method which completely eliminates this IR drop error in the potential measurement is one which momentarily turns the cathodic protection current off and measures the reference cell potential while the current is zero. The structure-to-reference potential is thus sampled at the "instant-off" level. This instant-off potential is then compared with the preset desired value, to control the rectifier. The TASC VIII controller, like the earlier TASC models, accomplishes the above described sampling of the structure-to-reference potential to provide IR drop free automatic control.

PRINCIPLES OF OPERATION:

The basic concept of the TASC VIII system controller is to "sample" the structure-to-reference potential at a time when the output current is zero thus eliminating IR drop error. The TASC VIII controller samples the structure-to-reference potential every half-cycle at a time immediately after the zero crossing of the AC input voltage. The rapid sampling of the structure-to-reference potential eliminates "bouncing" of the output volt and ammeters. The TASC VIII controller also has an output current limit feature which prevents the output current from reaching a value sufficient to cause failure of the output SCR's.

The sampling gate is actuated by and synchronized to the AC input voltage via the sample time generator. These circuits cause the structure-to-reference potential to be "sampled" for approximately 0.11 milliseconds, shortly after the zero crossing of the AC input wave form. This sample is taken every half-cycle of the input wave form; thus 120 samples are taken every second with a 60 Hz input. When the output current of the rectifier is below the current limit the sampled structure-to-reference potential is compared with the set potential and controls the SCR firing point. When the rectifier current required to satisfy the "potential" is greater than the current limit, then it will be limited to a safe value and the "potential" demand within the controller will not be satisfied, i.e. the sampled structure-to-reference potential will not be equal to the set potential.

Normally, a TASC VIII controlled rectifier will operate as follows when turned on after initial setup. Assume, for example, that the set potential is 0.9 volts. Before cathodic protection is applied, the actual structure-to-reference potential will be less than this

Input power:	115 VAC, 60 Hz
Set desired potential range:	+1.999 to -1.999 volts
Reference Cell Input Current:	< 0.3 uA
Reference Cell Input Impedance:	> 20 megohms
Set potential stability:	> 0.01% / degrees C
Input voltage offset voltage (difference between reference and set-point)	< 5mV
Current Limit Range (shunt voltage):	50 to 200 mV
Sample time per cycle:	0.11 milliseconds
Operating Temperature Range:	-25°C to + 55°C
Operating Humidity Range:	0-100%

GENERAL INSTALLATION:

Before going into the specific installation procedures for the TASC VIII rectifier, here are some general rectifier installation tips which may be useful:

1. The site of the installation is important. It should be installed at a location which is easily accessible for regular inspection and adjustment of the rectifier. If possible, it should not be located near residential districts, play grounds, etc., where vandalism may be a problem. If the rectifier is mounted around livestock, it should be fenced in or mounted high enough so they cannot scratch on it. If installed in remote areas open to hunting, it should be made as inconspicuous as possible. Avoid placing bright symbols or markings on the rectifier which would make good targets.

2. Adequate ventilation is important. Install the rectifier away from building ventilator shafts, diesel exhausts, etc. and keep an adequate distance from buildings or other devices. Air cooled rectifiers are cooled by convection (air moving over the components) and should not be located near other heat radiating sources. Keep the cabinet at least one foot away from the other objects. Nothing of an insulating nature should be applied to the case such as mastic, tar, etc. If possible, place the unit in the shade. Mounting it on the north side of the pole or structure will help. If the ambient temperature is extremely high, a sunshade is a good investment.

3. Most codes require a visible fused disconnect switch ahead of the rectifier. When working on the rectifier, make certain this switch is open (OFF). This should be done as voltage is present on the line side of the rectifier's circuit breaker even when it is in the "OFF" position.

4. Lightning arrestors are cheap insurance when the rectifier is located in areas of frequent thunder storms. The AC arrestor is best placed at the top of the service pole; but is effective even when placed inside the unit. AC and DC lighting arrestors should be standard equipment on all rectifiers with silicon bridges.

5. The following precautions should be observed on all rectifier installations:

   a.) The rectifier chassis should be connected to a ground rod driven at the location of the unit. Most manufacturers provide a grounding lug or terminal connection on the cabinet for this purpose.

   b.) Make certain before energizing the unit that the input voltage available is that for which the rectifier was designed.

   c.) Check the output connections for correct polarization.

   d.) Do not install other equipment in the rectifier cabinet. This invalidates the rectifier guarantee, since the manufacturer has no control over the quality of the equipment added. The additional equipment might also interfere with the cooling and/or operation of the rectifier.

6. Future ground-bed changes should to be considered when a conventional rectifier is adjusted at near maximum voltage or current. When initially adjusting the rectifier, start on the low adjusting taps and bring up the desired rating slowly. This keeps the power relatively low if a fault should occur.

TASC VIII INSTALLATION:

The TASC VIII controller is designed to be used in conjunction with a single phase full wave bridge, rectifier assembly having two silicon diodes and two silicon controlled rectifiers (SCR'S). The rectifier assembly should also contain a current shunt in the negative D.C. power circuit to provide an output current signal to the controllers current limiting circuitry. The proper connection of the TASC VIII controller is shown in the electrical schematic at the end of this manual. This electrical schematic shows an "Manual – Auto" switch. This switch allows the rectifier to operate manually without the controller. It also shows the potential meter connections and the general arrangement of terminal blocks and other components connected to the controller.

When the TASC VIII controller is factory installed in a rectifier, all interconnections are made, and only the three following areas are to be connected in the field:

1.) The correct AC input must be properly connected to the AC input terminal block following local codes and good installation practices.

2.) The leads from the anodes and the structure to be protected must be connected to the DC output lugs observing proper polarity with adequately sized wire.

3.) A sense lead from the structure to be protected must be connected to the black combination binding post / banana plug terminal on the inner hinged panel of the unit. This is usually done with a wire of sufficient size to prevent accidental breaking. The last wire to connect to the unit is the reference cell lead (a maximum of two independent cells and lead connections can be used). The red combination binding post / banana plug terminal on the inner hinged panel is provided for this purpose.

If the positive lead is placed in the same conduit as the reference cell lead, the structure sense lead (connected to the black binding post) must also be placed in the conduit. It is good practice to twist the structure sense lead and the reference cell leads together in the conduit. The negative output power lead can also be placed in the conduit so that the four leads associated with the output are in the same conduit.

All connecting wiring should be checked to be sure that it is secure, of correct polarity and properly dressed. The unit is now ready to be energized.

OPERATION:

After the rectifier with TASC VIII controller has been properly installed and connected, it is ready to be placed in operation. First, set the taps at their "lowest" setting (A-1), switch the "Auto-Manual" switch to "manual", and turn the rectifier on. The reference cell potential will then be measured by the controller. The tap settings should be increased until the measured structure-to-reference potential is greater than the desired value by a small amount. (Note: The measured structure-to-reference potential will indicate IR drop or "ON" potential when operating in manual mode because there may be some output current flowing when the sample is taken). The "Auto-Manual" switch can now be switched to "Auto".

The set or "desired" structure-to-reference potential is indicated on the potential meter when the Potential-Set switch is held in the Set position. If the set potential is not at the correct level, it should be changed to the exact desired level by adjusting the set potential adjustment potentiometer. With the unit operating in Auto mode, the structure-to-reference potential should be identical to the set potential (within 5mV). If the structure-to-reference potential indicates less protection than the set potential, the tap setting will have to be increased to achieve more output. The tap setting will not have to be increased beyond a point where the reference potential is equal to the set potential unless changes in the system are anticipated which will require a greater output voltage from the rectifier to maintain the desired (set) potential.

Proper setting of the TASC VIII unit's taps will result in the following observed operation when the unit is turned on. The output will immediately go to full output for the established tap setting and remain there until the desired structure-to-reference potential is equal to the set potential.

The controller has an automatic current limit circuit which prevents the output current from reaching a value sufficient to damage the components of the rectifier.

MAINTENANCE:

The maintenance of a rectifier using the IR DROP FREE controller is only slightly more involved than that of a manual rectifier. It should begin by keeping proper records. These records should indicate the following:

a.) AC input voltage and amperage
b.) AC voltage at the SCR / Diode bridge
c.) Output DC voltage and amperage
d.) Rectifier tap setting

Records are usually kept of these parameters for manual rectifiers. It is all the more important to keep records of these for IR DROP FREE units. In addition the following items should be recorded.

e.) "Set-point" potential
f.) Reference cell potential

It is also quite helpful to record any known changes in the system which might effect the output. Such changes might include water level on a storage tank, condition of the tank coating, or impurity content of the water. Records indicating changes can be very helpful in finding rectifier performance and operational problems.

TROUBLESHOOTING:

Should it be determined that the TASC VIII rectifier is not operating properly, the control card of the unit can be removed and replaced with a control card known to be good. First, turn "OFF" the main power circuit breaker on the unit. Turn the two quarter-turn fasteners on the front hinged panel counter-clockwise and swing open the panel. The circuit card is located on the left side of the back panel and is easily removed by pulling it straight out from the unit. Slide the new card into the unit and turn "ON" the rectifier.

If the new card does not produce proper operation (after ensuring to set the desired set potential), then the problem could be in the remainder of the unit. The "Auto-Manual" switch on the unit should then be switched to the manual position. When the rectifier is switched to "manual" mode, the SCR's are circuited in a continuous "ON" state and act as diodes. Thus, the unit should perform like any manually adjusted single phase rectifier.

(Note: If it is desirable to measure the structure-to-reference potential while in manual mode, the measured potential will not then be IR drop free! This is true even though the structure-to-reference potential is being sampled 120 times a second just after the zero crossing of the AC wave form. There will be some current through the electrolyte which is prevented from flowing when the unit is operating in automatic mode.)

The simplest way to approach a trouble shooting procedure is to go through the unit in a step by step manner to ensure all components are checked. Therefore, in this discussion, the components which are used (excluding the previously discussed TASC VIII controller) will be studied, starting from the output of the unit and carrying it back through to the input.

1.) The meters in the rectifier should be checked using a portable DVM (Digital Voltmeter), which is known to be accurate. An assumption that a rectifier is inoperative or has no output may come as a result of no reading on the voltmeter or ammeter. However, one should not overlook the fact the voltmeter or ammeter itself could be at fault. The accuracy of the TASC VIII voltmeter can be checked by connecting the DVM leads across the test points on the front panel labeled VOLTS "+" and "-". The TASC VIII ammeter can then be checked by connecting your DVM leads across the test points on the front panel labeled TOTAL AMPS "+" and"-". (It should be noted that the "-" test point for the above two measurements is identical.) The potential meter can also be verified by connecting the DVM negative lead to the front panel connector labeled "STR." and the positive lead to the connector labeled "REF. 1". Please note that the potential reading at these points is "ON" potential and should be only used for comparison of the potential meter with no DC current output from the rectifier. The above test points are clearly shown on drawings "1000-T-0040C" & "1000-T-0042C" at the end of this manual.

2.) Ensure that the output circuit and connections are good. If there is DC voltage at the output of a unit but no current, it is likely that the anode or structure connection and/or cabling is faulty and should be checked.

3.) The DC output circuit fuse protects the unit from a possible "current overload" condition. If this device continually operates (goes open circuit), the output circuit may be "shorted" (or has significantly lowered in resistance) and should be investigated.

4.) The DC surge arrestor acts as a by-pass for high voltage surges entering the rectifier as a result of lightning and/or transients. When the DC arrestor in a unit fails, generally there are quite visible signs of this failure. If, however, the DC output fuse continually operates, disconnect the arrestor, replace the fuse and try to turn the breaker on. If the fuse now remains continuous, then the DC arrestor may have "shorted" on the last surge into the unit.

5.) The SCR / Diode bridge is the device that converts the alternating current (AC) from the secondary of the transformer to direct current (DC) for use in cathodic protection. This device can fail due to a voltage surge into the AC or DC side of the unit (generally protected by the surge arrestors and fusing in the unit). The SCR / Diode bridge can fail to a "short circuit" or an "open circuit" condition. If the secondary AC fuse in the unit operates (and the above five points have been checked), the bridge in the unit could be "shorted" and may need replacement. Alternately, if rated current cannot be achieved from the unit, part of the bridge in the unit could have "opened" and it may again, need replacement.

6.) The AC secondary fuse is another form of protection for the unit against surges and overloads. If the rectifier is set to operate above it's rating, this fuse may operate. (Also refer to the above steps for alternate causes of this fuse to operate.)

7.) The transformer provides three important qualities to the rectifier. It isolates the AC utility from the cathodic system, it steps the input AC voltage up or down as needed, and provides a form of output adjustment. To ensure a transformer is operating correctly, measure the AC voltage between each of the "coarse" and "fine" terminals on the transformer secondary (A-B, B-C, C-D, D-E (COARSE))(1-2, 2-3, 3-4, 4-5 (FINE)). From A to E and 1 to 5, the voltages should be in equal steps and the "fine" terminals should be approximately 1/5th the value of a "coarse" terminal. (For example, on a transformer with a 50VAC secondary; A-B should equal 10 VAC, B-C should equal 10 VAC, etc. Consequently, 1-2 should equal 2 VAC, 2-3 should equal 2 VAC, etc.) The maximum secondary AC voltage of the transformer should appear between the

terminals labeled as "E" and "5". The value of the transformer secondary should be approximately 1.1 to 1.2 times the rated DC output voltage of the unit.

8.) The circuit breaker is a magnetic type of breaker which serves three functions. It protects the unit from overloads, short circuits, and is used as an "OFF" and "ON" switch for the unit. Circuit breakers can sometimes develop bad contacts; therefore, if the unit is completely inoperative, use a DVM to ensure if there is AC voltage on the load side (as well as line side) of the breaker when in the "ON" position.

9.) The AC surge arrestor acts as a by-pass for high voltage surges entering the rectifiers AC input as a result of lightning and/or transients. When the AC arrestor in a unit fails, generally there are quite visible signs of this failure. If, however, the input breaker continually operates, disconnect the arrestor, and try to turn the breaker on. If the breaker now remains on, then the AC arrestor may have "shorted" on the last surge into the unit.

10.) A very important (and many times forgotten) item to check is the AC input terminals. Ensure that there is in fact AC voltage to the unit and at a correct level for the unit's rating. Do this with the unit's breaker in the "ON" position.

Certain special features may be incorporated in the rectifier, such as secondary breaker protection, alarm circuits, etc.; please refer to the Specification / Parts Listing, Electrical Schematic, and the Optional Features page (if applicable) included with this manual.

For additional troubleshooting information or technical assistance, please contact the nearest Corrpro Companies office. Office locations are listed at the beginning of this manual or may be easily accessed through our website (www.corrpro.com).

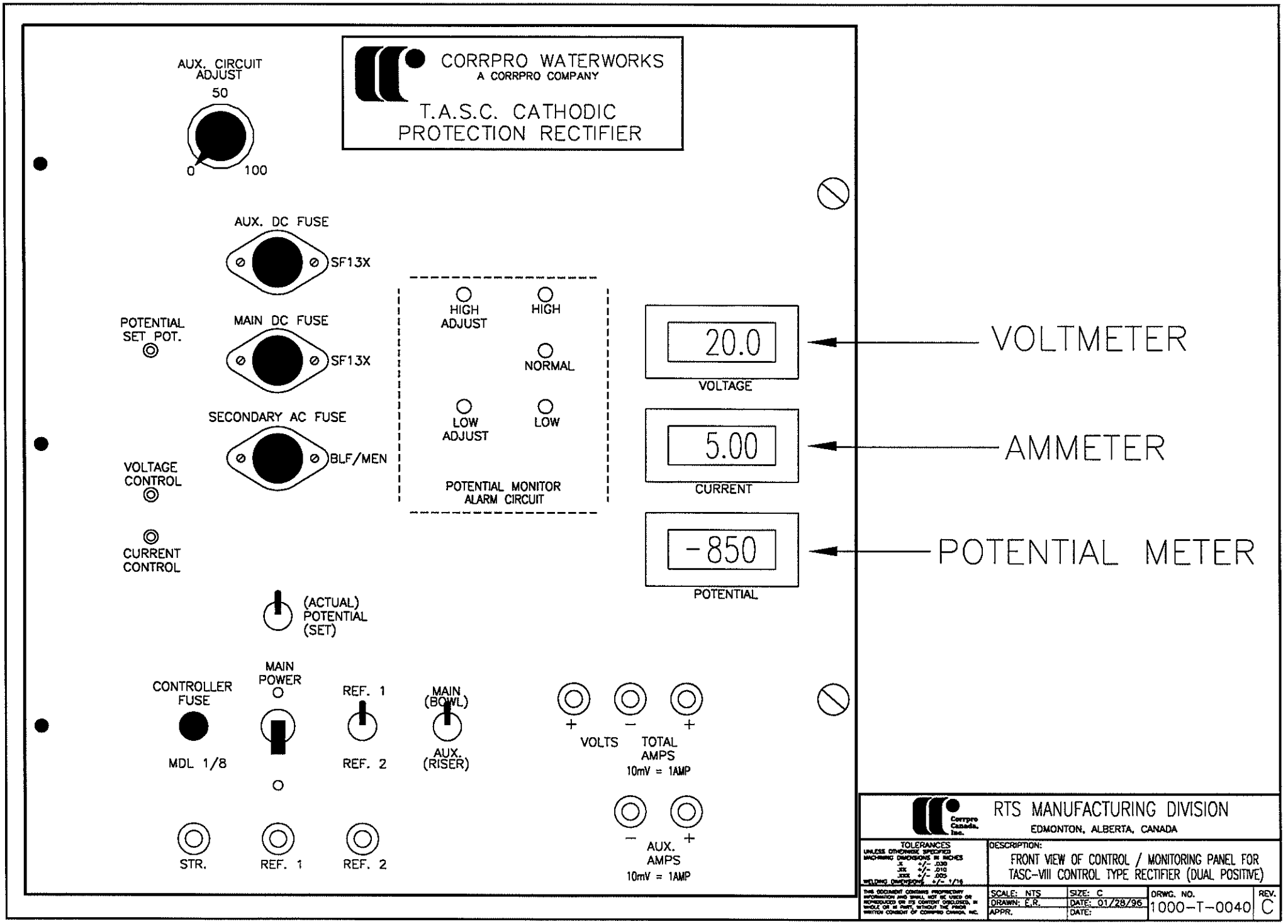

RTS MANUFACTURING DIVISION
EDMONTON, ALBERTA, CANADA

TOLERANCES
UNLESS OTHERWISE SPECIFIED
MACHINING DIMENSIONS IN INCHES
.X +/- .030
.XX +/- .010
.XXX +/- .005
WELDING DIMENSIONS +/- 1/16

THIS DOCUMENT CONTAINS PROPRIETARY INFORMATION AND SHALL NOT BE USED OR REPRODUCED OR ITS CONTENT DISCLOSED, IN WHOLE OR IN PART, WITHOUT THE PRIOR WRITTEN CONSENT OF CORRPRO CANADA, INC.

DESCRIPTION:
FRONT VIEW OF CONTROL / MONITORING PANEL FOR TASC-VIII CONTROL TYPE RECTIFIER (DUAL POSITIVE)

SCALE: NTS	SIZE: C	DRWG. NO.	REV.
DRAWN: E.R.	DATE: 01/28/96	1000-T-0040	C
APPR.	DATE:		

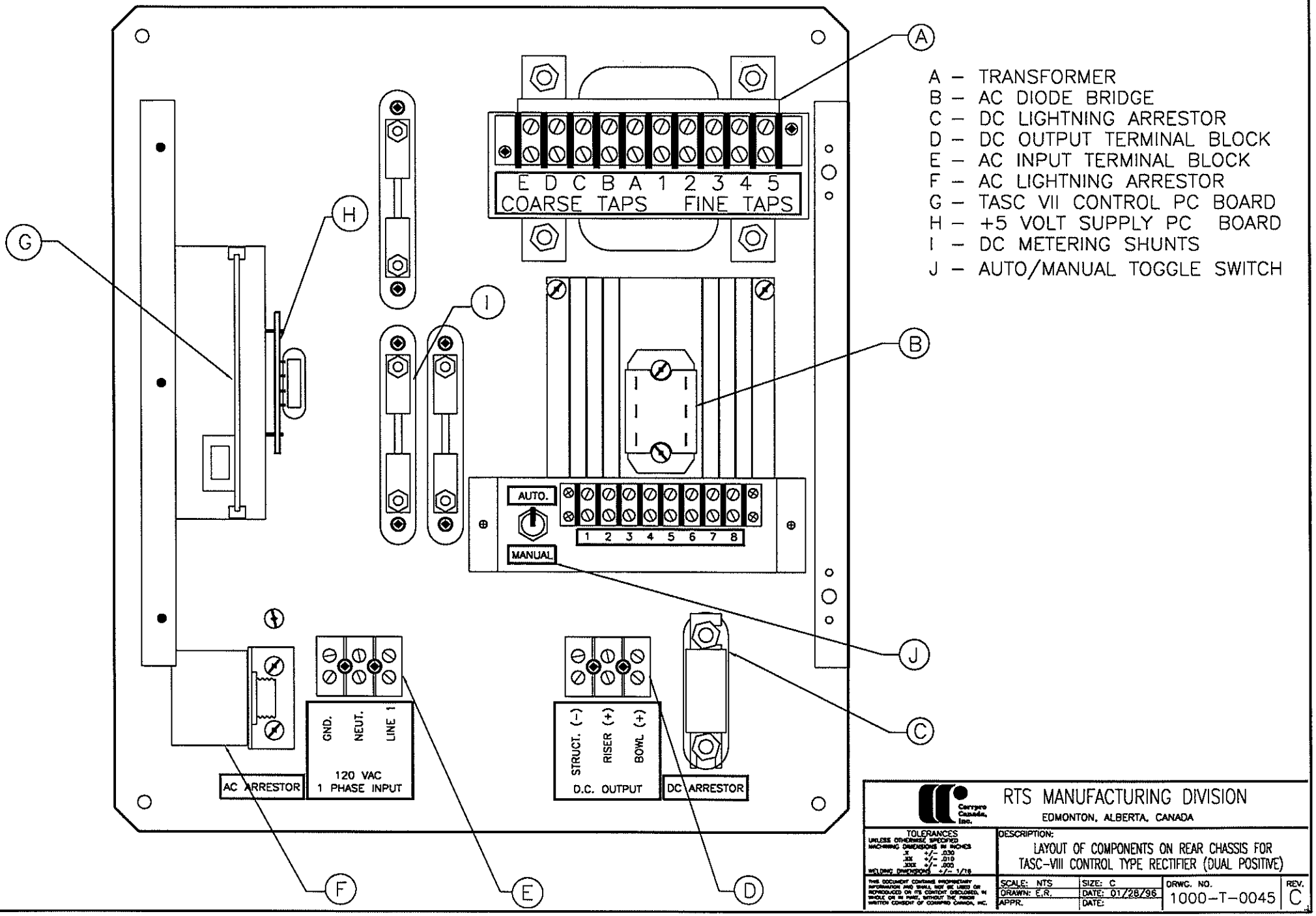

A – TRANSFORMER
B – AC DIODE BRIDGE
C – DC LIGHTNING ARRESTOR
D – DC OUTPUT TERMINAL BLOCK
E – AC INPUT TERMINAL BLOCK
F – AC LIGHTNING ARRESTOR
G – TASC VII CONTROL PC BOARD
H – +5 VOLT SUPPLY PC BOARD
I – DC METERING SHUNTS
J – AUTO/MANUAL TOGGLE SWITCH

Cooper Canada, Inc.

RTS MANUFACTURING DIVISION
EDMONTON, ALBERTA, CANADA

TOLERANCES
UNLESS OTHERWISE SPECIFIED
MACHINING DIMENSIONS IN INCHES
.X +/- .030
.XX +/- .010
.XXX +/- .005
WELDING DIMENSIONS +/- 1/16

THIS DOCUMENT CONTAINS PROPRIETARY INFORMATION AND SHALL NOT BE USED OR REPRODUCED OR ITS CONTENT DISCLOSED IN WHOLE OR IN PART, WITHOUT THE PRIOR WRITTEN CONSENT OF COOPER CANADA, INC.

DESCRIPTION:
LAYOUT OF COMPONENTS ON REAR CHASSIS FOR TASC-VIII CONTROL TYPE RECTIFIER (DUAL POSITIVE)

SCALE: NTS	SIZE: C	DRWG. NO.	REV.
DRAWN: E.R.	DATE: 01/28/96	1000-T-0045	C
APPR.	DATE:		

NEMA 4X CABINET IS SIZED IN ACCORDANCE W/NEMA STANDARDS FOR AIR COOLING PROVISIONS.

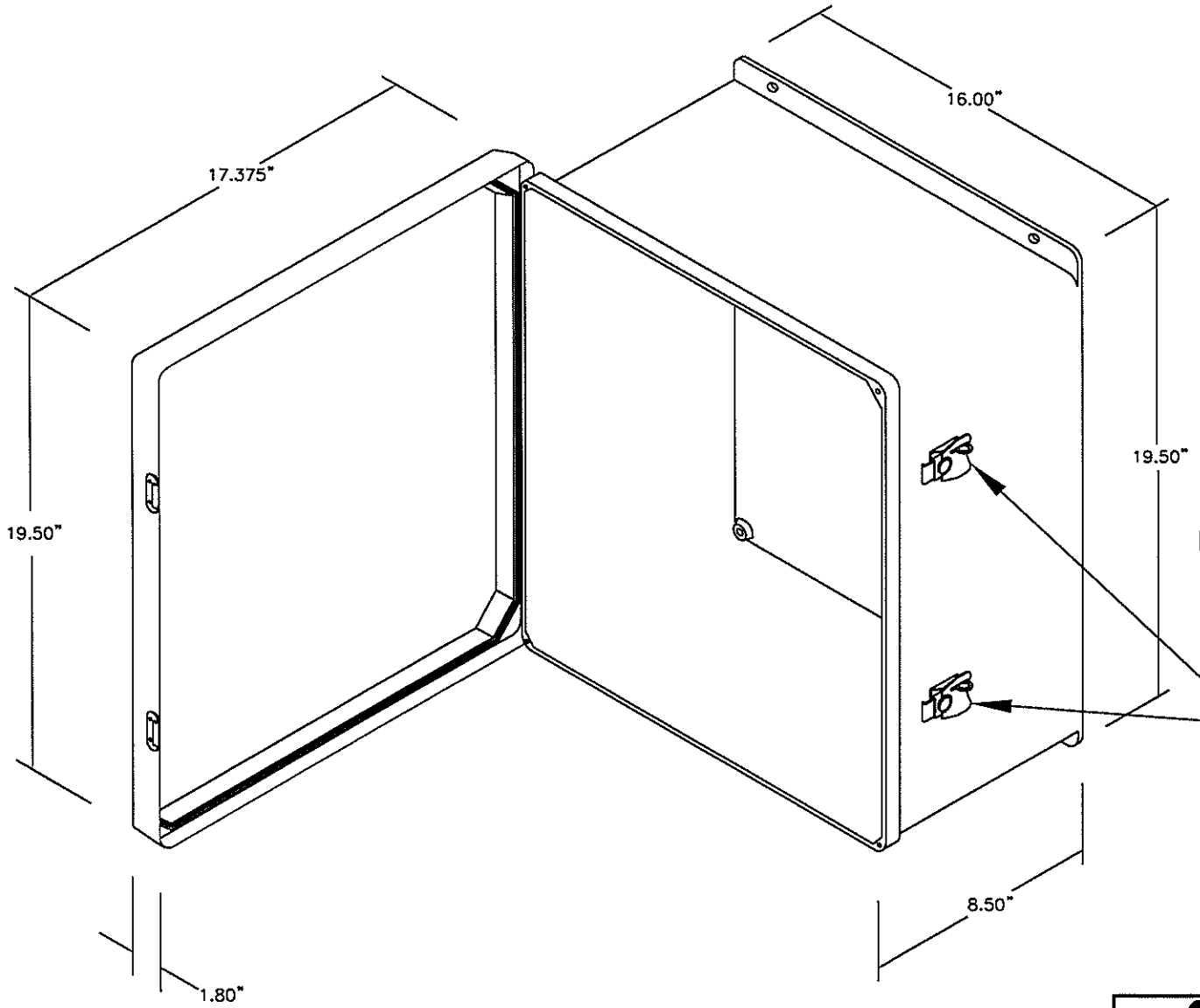

MOUNTING DIMENSIONS:
(CENTER TO CENTER)

WIDTH – 12.00"
HEIGHT – 18.75"
HOLE SIZE – 0.34" (11/32)

OVERALL CLEARANCE DIMENSIONS:

WIDTH – 18.00"
HEIGHT – 19.50"

COMPOSITION:

FRP–(fiberglass reinforced plastic)

NEMA RATING:

NEMA 4X

DUAL HASPS W/PROVISION FOR PADLOCKS

Compro Canada, Inc.

RTS MANUFACTURING DIVISION
EDMONTON, ALBERTA, CANADA

TOLERANCES
UNLESS OTHERWISE SPECIFIED
MACHINING DIMENSIONS IN INCHES
.X +/- .030
.XX +/- .010
.XXX +/- .005
WELDING DIMENSIONS +/- 1/16

THIS DOCUMENT CONTAINS PROPRIETARY INFORMATION AND SHALL NOT BE USED OR REPRODUCED OR ITS CONTENT DISCLOSED, IN WHOLE OR IN PART, WITHOUT THE PRIOR WRITTEN CONSENT OF COMPRO CANADA, INC.

DESCRIPTION:
LAYOUT AND DIMENSIONING OF TYPICAL FIBERGLASS ENCLOSURE FOR TASC-VIII CONTROL TYPE RECTIFIER

SCALE: NTS	SIZE: C	DRWG. NO.	REV.
DRAWN: E.R.	DATE: 01/28/96	1000-T-0050	C
APPR.	DATE:		

TASC RECTIFIER SCHEMATIC

NOTES:

1.) CONSULT RECTIFIER SPECIFICATION SHEET FOR DESCRIPTION, PART NUMBERS & QUANTITIES.

2.) SELECT SWITCH/JUMPER FOR CORRECT INPUT VOLTAGE AS FOLLOWS:
FOR 115VAC: SELECT 115 ON SWITCH OR JUMPER 1-2 & 3-4.
FOR 230VAC: SELECT 230 ON SWITCH OR JUMPER 2-3 ONLY.

3.) JUMPER "A" & "B" FOR +12VDC LAMPS.

4.) JUMPER 1-2 FOR CONTINEOUS MODE ONLY.

5.) OPTIONAL VOLTAGE PROGRAM RESISTOR: $\frac{(Vout-8.82)}{2.60} \times 10K$.

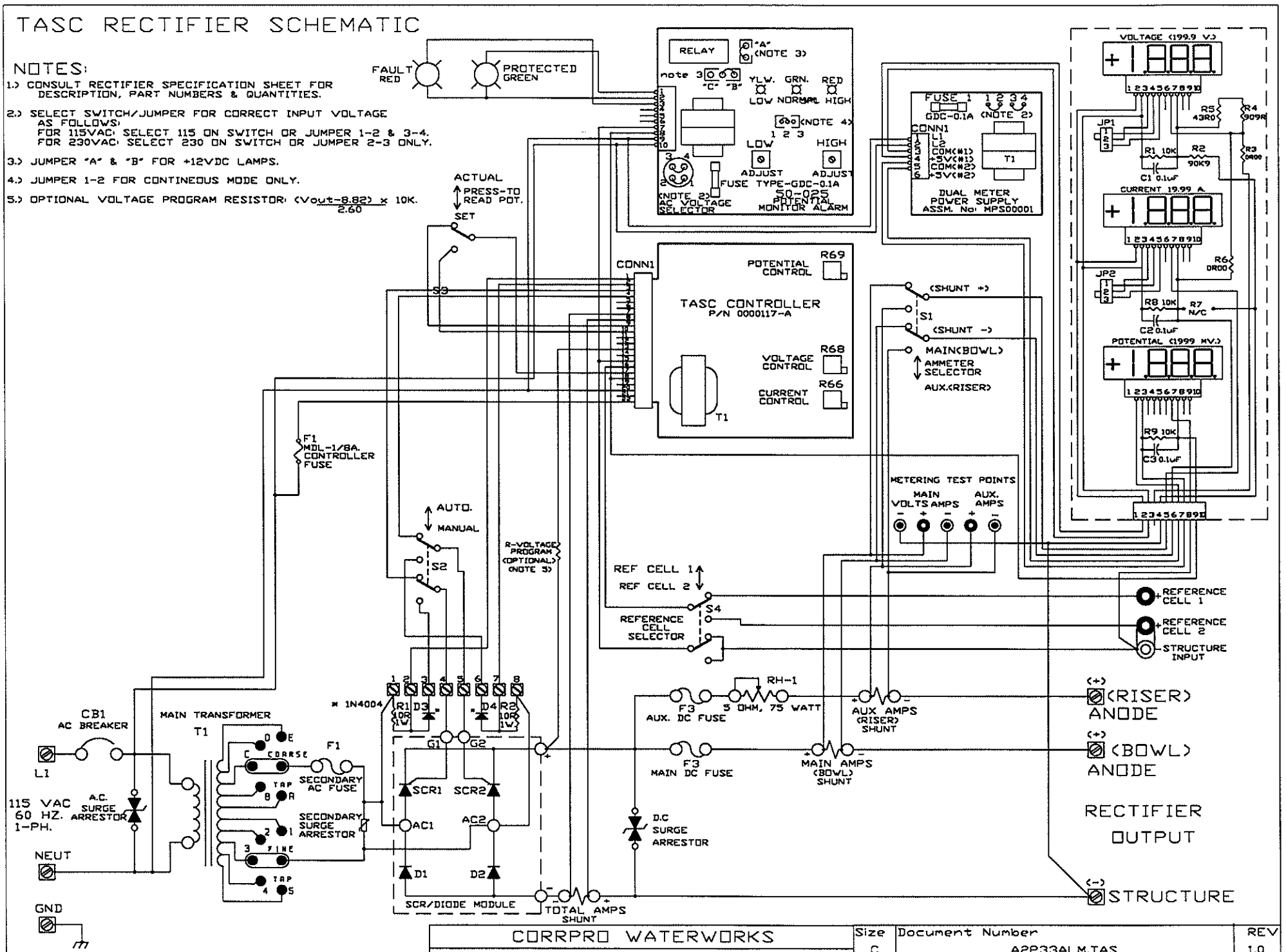

CORRPRO WATERWORKS	Size	Document Number	REV
Title: TASC , 115VAC, DUAL POSITIVE	C	A2P33ALM.TAS	1.0
	Date	July 15, 1998 Sheet 1 of 1	

CORRPOWER

RECTIFIER SPECIFICATION SHEET

CUSTOMER:
MODEL: TASCA 30-8 CJ
S/N:

PO#:
CRD PART #: TA-3008-19
MSO:

DATE:

AC VOLTS: 115 DC VOLTS: 30 PH: 1 FREQ: 60Hz INPUT VA: 387
AC AMPS: 3.37 DC AMPS: 8 O/P CCTS: 2-POS. TYPE: TASC CONTROL

QTY.	CRD P/N	DESCRIPTION
1	67-X-1816	ENCL,18x16x9,NEMA 4X,FPR,FIBERGLASS
1	61-T-0100	ENCL, TASC-VII CHASSIS, 16x18,WHITE
1	61-T-0110	ENCL, TASC PHENOLIC MTG BKT, LEFT
1	61-T-0120	ENCL. TASC PHENOLIC MTG. BKT, RIGHT
1	61-T-0155	MOUNTING BRACKETS FOR TASC VIII ENC
1	61-T-0195	TASC SERIES FRONT PANEL,W/ALRM/2CKT
1	A1-T-3008-A	TRANSFORMER, 30-08 TAP 115VAC
1	40-X-0010	METER, DIGITAL LED, 199.9 mV
2	40-X-0020	METER, DIGITAL LED, 1999 mV
1	A4-T-0060	BRD ASSM.,TASC. DIG.METER BRD 2-CKT
1	B3-P-0110	BOARD ASSM., +5V DUAL POWER SUPPLY
1	04-B-0200	25 AMPERE, 400 VOLTS PIV
1	75-P-0030	HEATSINK, #423-K, GOLD
1	61-T-0160	TASC TERM BLOCK MTG. BRACKET
1	30-B-0005	CIRCUIT BREAKER 5.0A 240V
3	43-B-1010	SHUNT 10AMP 100MV SW WITH BASE
1	A4-T-0035	BOARD ASSY, SCR CONTROLLER PIV-0100
2	08-L-7000	ARRESTOR, 120 VAC, 1-PHASE, 2-WIRE
1	08-L-8100	ARRESTOR, 60VAC.(100V.PEAK),2-TERM
1	07-S-3130	M.O.V., SIOV-S20K130, 130V
3	38-P-0020	FUSEHOLDER, HPF 13/32" DIA.
2	35-X-0010	FUSE, 10 AMP, 250 VAC, TYPE MEN/BLF
4	36-A-0020	FUSE, 10 AMP, 130 VAC
1	A5-B-0050	BOARD ASSM, POTENTIAL MONITOR ALARM
1	49-I-0170	11/16" DIAMETER LED, RED, +12 VDC
1	49-I-0180	11/16" DIAMETER LED, GREEN, +12 VDC
1	25-C-1000	5.0 OHM, 100 WATT
1	26-K-0010	KNOB, BLACK
1	26-D-0015	2.125" DIAMETER
1	86-X-0010	BINDING POST, SINGLE 5-WAY BLACK
2	86-X-0020	BINDING POST, SINGLE 5-WAY RED
3	86-X-0210	0.093 PHONE TIP, BLACK
2	86-X-0200	0.093 PHONE TIP, RED
1	45-B-0010	SWITCH TOGGLE,DPDT(S-332),ON-N-ON
1	45-B-0010	SWITCH TOGGLE,DPDT(S-332),ON-N-ON
1	45-B-0020	SWITCH TOGGLE,DPDT(S-335),ON-N-MOM
1	45-B-0020	SWITCH TOGGLE,DPDT(S-335),ON-N-MOM
1	88-D-0150	TERMINAL BLOCK, 10-142/10-143
1	88-D-0070	TERMINAL BLOCK, 8-141
1	88-D-0357	TERM BLOCK,4POS,85AMP,600V,4-18AWG
1	88-D-0355	TERM.BLOCK,3POS,85AMP,600V,4-18AWG
1	MANUAL01	OPERATING MANUAL, TASC-VIII

SECTION IX – SAMPLE – SERVICE AGREEMENT

CORRPRO WATERWORKS

P.O. Box 721
Medina, Ohio 44256
Phone: (330) 725-6681
Fax: (330) 723-6065

Annual Cathodic Protection Service Agreement for Water Storage Corrosion Control per AWWA D104

Our minimum standard scope of work for each system includes:

1. Tank-to-water potential profile within tank to monitor effectiveness of system on submerged metal surface of tank.
2. Electrical measurements to test anode and reference cells.
3. Inspect, test and clean rectifier, controls, meters, contacts, connections. Replace fuses as required.
4. Adjust system for optimum corrosion control on submerged metal surface of tank.
5. Submit report with all data obtained, evaluation of data and recommendations for continued performance.

If required, additional work or maintenance coverage may also be covered in "Type of Service" as indicated.

TANK CAPACITY	TANK LOCATION	SYSTEM #	TYPE OF SERVICE	ANNUAL RATE
			PLAN "C"	
			PLAN "C"	
			TOTAL PRICE	

THIS AGREEMENT PROVIDES FOR ONE ANNUAL STANDARD INSPECTION AS DESCRIBED ABOVE OF THE CATHODIC PROTECTION CORROSION CONTROL EQUIPMENT LISTED.

Payment is due at the start of the contract period. Additional replacements not included in the service price would be subject to the subscribers approval. The subscriber agrees to hold harmless Corrpro Waterworks for damages not covered by Public Liability, Property Damage and Workman's Compensation Insurance.

Agreement period: _____

Please return on or before: _____

ACCEPTED BY CORRPRO WATERWORKS

By: _____

Title: National Contracts Manager

Date: _____

SUBSCRIBER'S ACCEPTANCE

By: _____

Title: _____

Date: _____

Submitted in Duplicate – Please return one signed copy to the above address.
We appreciate the opportunity of being of service

CORRPRO WATERWORKS – ADDITIONAL WATER TANK SERVICES

ANNUAL 15 POINT TANK REVIEW

1. FOUNDATION: OBSERVE FOR SETTLING, CRACKS, AND DETERIORATION.
2. EXTERIOR TANK COATING: OBSERVE FOR COATING FAILURE, CORROSION, AND LEAKS.
3. INTERIOR TANK COATING: OBSERVE AS ALLOWED FROM ACCESS HATCHES.
4. WATER LEVEL INDICATOR: CHECK OPERATIONAL CONDITION.
5. OVERFLOW PIPE: CHECK THE FLAP VALVE COVER AS ACCESSIBLE, OPERABLE, AND SEALED.
6. ACCESS LADDER: CHECK FOR LOOSE BOLTS AND RUNGS.
7. FALL PROTECTION DEVICES: CHECK OPERATION.
8. ROOF: CHECK FOR HOLES, RUST, AND PONDING WATER LOW SPOTS.
9. AIR VENTS: CHECK SCREENS, SEALED EDGES, AND SEAMS.
10. CATHODIC PROTECTION ANODES COVERS: CHECK FOR DETERIORATED GASKETS, AND IMPROPER SEAL. (FOR TANKS NOT PRESENTLY COVERED BY A SERVICE AGREEMENT).
11. ROOF HATCH: CHECK LOCKS, HINGES, AND GASKETS.
12. VISUAL WATER QUALITY: OBSERVE FOR FOREIGN MATTER AS DISCERNABLE FROM THE ROOF HATCH.
13. PHOTOGRAPH AREAS OF CONCERN.
14. WRITTEN RECOMMENDATIONS FOR CORRECTIVE ACTION IF REQUIRED.
15. OBSERVE TANK SITE SECURITY. CHECK FENCES, GATES, AND ACCESS DOORS.

ANNUAL COST $ PER TANK **ACCEPTED: YES_____ NO_____**

*** The service provided is an annual visual evaluation for the purpose of noting possible areas which may require further investigation or possible corrective action in accordance with AWWA recommended practices. It is limited to areas of the tank visible from access points such as ladders and catwalks. The work performed is not a structural evaluation nor does it take the place of a complete 3-5 year water tank inspection as recommended by AWWA standards.**

AVIATION LIGHT BULB REPLACEMENT (standard bulbs included)

REPLACE ALL AVIATION LIGHT BULBS AT **$115.00** PER TANK FOR THE FIRST TWO BULBS AND **$25.00** EACH ADDITIONAL BULB.

ACCEPTED: YES _____ NO _____

*** Price based on Max. bulb size, 116 watt medium screw base Traffic Signal Bulb (116 A21 / TS)**

INTERIOR LIGHT BULB REPLACEMENT (standard bulbs included)

REPLACE ALL INTERIOR LIGHT BULBS AT **$115.00** PER TANK FOR THE FIRST FIVE BULBS AND **$10.00** EACH ADDITIONAL BULB.

ACCEPTED: YES _____ NO _____

*** Price based on Max. bulb size, 150 watt medium screw base Rough Service Incandescent Bulb (150 A23 / RS)**

CUSTOMER: **SIGNATURE:** _____

CW: **TITLE:** _____

DATE: _____

***All additional work is accepted as an addendum to the cathodic protection service agreement in accordance with the terms and conditions as indicated on the contract. Prices are contingent upon all work being performed in one site visit in conjunction with the acceptance of the cathodic protection system service agreement. Upon acceptance, if there are additional tanks in the water system that do not have cathodic protection systems, they may also be added to the service agreement for Tank Review and Bulb Replacement Service.**

SECTION X – MONTHLY MONITORING LOG

Corrpro Waterworks

CATHODIC PROTECTION SYSTEM MONTHLY MONITORING LOG

TANK OWNER:_____ LOCATION: _____

TANK CAPACITY: _____ TANK NAME: _____

TANK LOCATION: _____

RECTIFIER SERIAL NUMBER: _____ TYPE OF ANODE SYSTEM: _____

Upon completion and final testing of the cathodic protection system, the rectifier was operating at the following values:

Date _____ Reference Potential _____ Rectifier Volts _____ Amps #1 _____ Amps #2_____

Rectifier voltage tap setting: Coarse _____ Fine_____

Approximate water level in tank at time of reading (circle): Full 3/4 1/2 1/4 Empty

Month #1:
Date _____ Reference Potential _____ Rectifier Volts _____ Amps #1 _____ Amps #2_____

Rectifier voltage tap setting: Coarse _____ Fine_____

Approximate water level in tank at time of reading (circle): Full 3/4 1/2 1/4 Empty

Month #2:
Date _____ Reference Potential _____ Rectifier Volts _____ Amps #1 _____ Amps #2_____

Rectifier voltage tap setting: Coarse _____ Fine_____

Approximate water level in tank at time of reading (circle): Full 3/4 1/2 1/4 Empty

Month #3:
Date _____ Reference Potential _____ Rectifier Volts _____ Amps #1 _____ Amps #2_____

Rectifier voltage tap setting: Coarse _____ Fine_____

Approximate water level in tank at time of reading (circle): Full 3/4 1/2 1/4 Empty

Month #4:
Date _____ Reference Potential _____ Rectifier Volts _____ Amps #1 _____ Amps #2_____

Rectifier voltage tap setting: Coarse _____ Fine_____

Approximate water level in tank at time of reading (circle): Full 3/4 1/2 1/4 Empty

Month #5:
Date _____ Reference Potential _____ Rectifier Volts _____ Amps #1 _____ Amps #2_____

Rectifier voltage tap setting: Coarse _____ Fine_____

Approximate water level in tank at time of reading (circle): Full 3/4 1/2 1/4 Empty

Cathodic Protection Monthly Monitoring Log - continued…

Month #6:
Date _____ Reference Potential _____ Rectifier Volts _____ Amps #1 _____ Amps #2_____

Rectifier voltage tap setting: Coarse _____ Fine_____

Approximate water level in tank at time of reading (circle): Full 3/4 1/2 1/4 Empty

Month #7:
Date _____ Reference Potential _____ Rectifier Volts _____ Amps #1 _____ Amps #2_____

Rectifier voltage tap setting: Coarse _____ Fine_____

Approximate water level in tank at time of reading (circle): Full 3/4 1/2 1/4 Empty

Month #8:
Date _____ Reference Potential _____ Rectifier Volts _____ Amps #1 _____ Amps #2_____

Rectifier voltage tap setting: Coarse _____ Fine_____

Approximate water level in tank at time of reading (circle): Full 3/4 1/2 1/4 Empty

Month #9:
Date _____ Reference Potential _____ Rectifier Volts _____ Amps #1 _____ Amps #2_____

Rectifier voltage tap setting: Coarse _____ Fine_____

Approximate water level in tank at time of reading (circle): Full 3/4 1/2 1/4 Empty

Month #10:
Date _____ Reference Potential _____ Rectifier Volts _____ Amps #1 _____ Amps #2_____

Rectifier voltage tap setting: Coarse _____ Fine_____

Approximate water level in tank at time of reading (circle): Full 3/4 1/2 1/4 Empty

Month #11:
Date _____ Reference Potential _____ Rectifier Volts _____ Amps #1 _____ Amps #2_____

Rectifier voltage tap setting: Coarse _____ Fine_____

Approximate water level in tank at time of reading (circle): Full 3/4 1/2 1/4 Empty

Month #12:
Date _____ Reference Potential _____ Rectifier Volts _____ Amps #1 _____ Amps #2_____

Rectifier voltage tap setting: Coarse _____ Fine_____

Approximate water level in tank at time of reading (circle): Full 3/4 1/2 1/4 Empty

Name of Person Monitoring System: _____Ph: _____ Alt Ph:_____

As a condition of the warranty of the cathodic protection system, it must be documented on a monthly basis on the postage paid (pink) Monthly Report Cards and mailed for review and evaluation by our technicians.

NO adjustment or repair of Automatic Systems is recommended without first contacting your nearest Corrpro Waterworks Service Office.

Corrpro Waterworks - 581 Sigman Rd, Suite 300 - Conyers, GA 30013
Miles Steele, Southeast Regional Manager - Telephone: 770-761-5400 - Fax: 770-761-5410

COUNTRY LANE 2.0 MG
ELEVATED STORAGE TANK

CITY OF ROCKWALL, TEXAS

SPECIFICATION SECTION: TS2 & CONTRACT DRAWINGS

OPERATIONS & MAINTENANCE MANUAL

INTERIOR MECHANICAL

TABLE OF CONTENTS:

1. **GATE VALVE**
2. **FLAP VALVE**
3. **BUTTERFLY VALVE WITH MOTOR OPERATOR**
4. **GATE VALVE WITH MOTOR OPERATOR**

SUPPLIER / SUBCONTRACTOR

MULTIPLE – SEE ATTACHED

GENERAL CONTRACTOR

LANDMARK STRUCTURES I, LP
1665 HARMON ROAD
FORT WORTH, TEXAS 76177
(817) 439-8888

GATE VALVE

TABLE OF CONTENTS:

A. DATA SHEETS

B. OPERATION AND MAINTENANCE MANUAL

MANUFACTURER: **AMERICAN FLOW CONTROL**

MODEL #: **SERIES 2500**

SIZE: **12”**

SUPPLIER

HD SUPPLY WATERWORKS, LTD.
CONTACT: ERIC RIPPER
5000 FRANKLIN AVENUE
WACO, TEXAS 76170
(254) 772-7910

SERIES 2500 RESILIENT WEDGE GATE VALVE

RWGV1

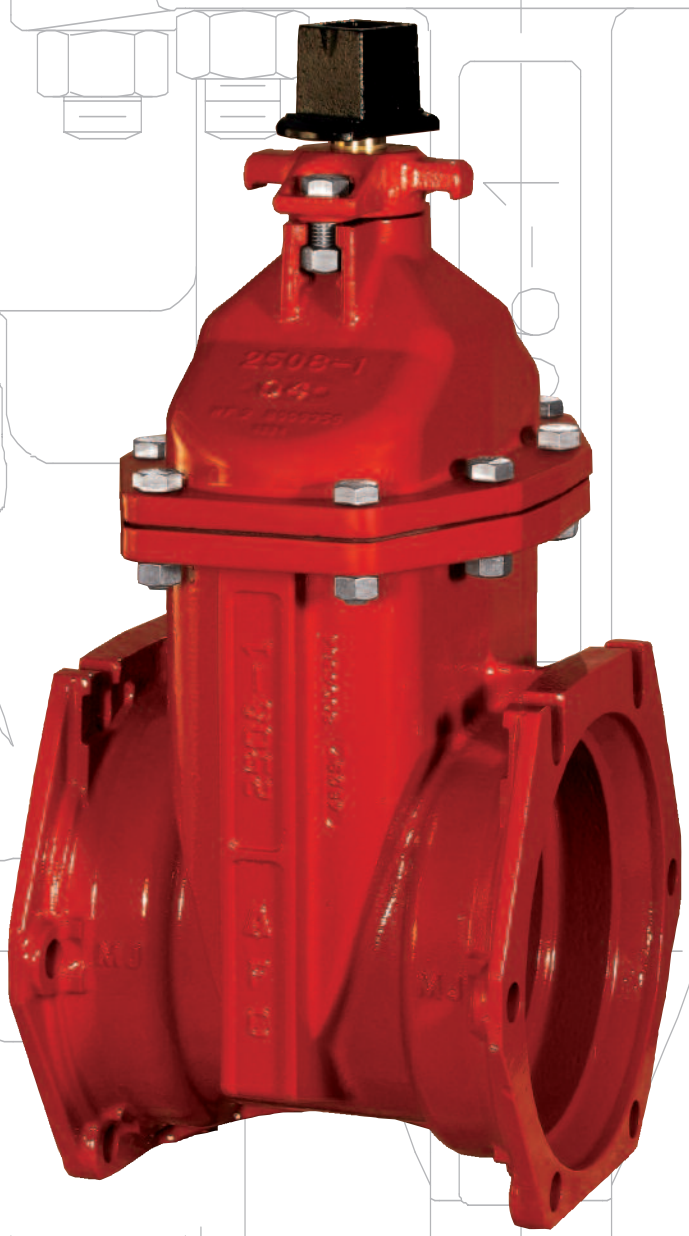

2"–12" 250 p.s.i.g.
SERIES 2500
RESILIENT WEDGE GATE VALVE

100 YEARS

AMERICAN FLOW CONTROL
It's What We Know.®

CONSTRUCTION

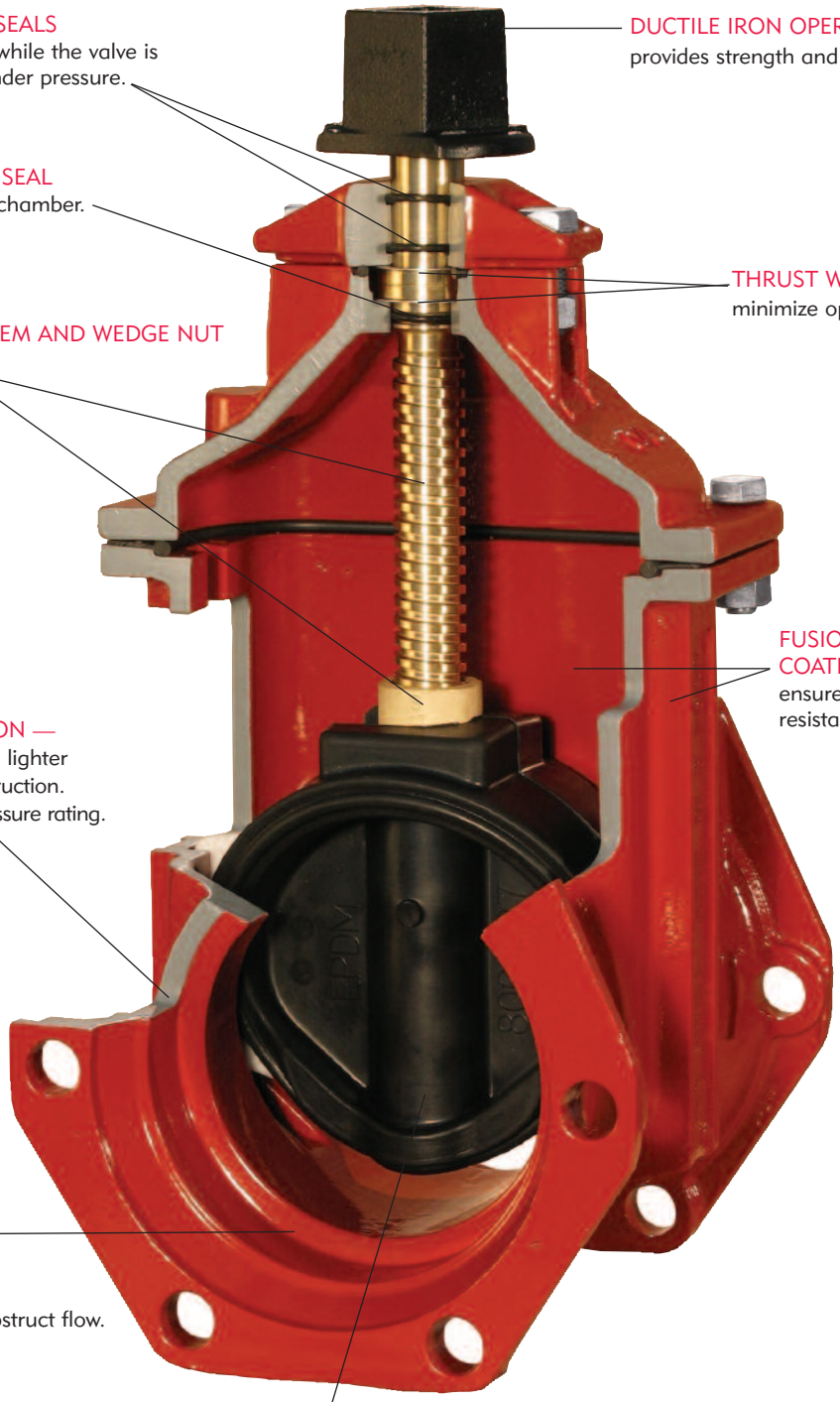

UPPER O-RING SEALS
can be replaced while the valve is fully open and under pressure.

LOWER O-RING SEAL
seals lubrication chamber.

HIGH-STRENGTH BRONZE STEM AND WEDGE NUT
resist corrosion and abuse.

DUCTILE IRON CONSTRUCTION —
Greater strength, durability, and lighter weight than cast gray iron construction.
250 p.s.i.g. AWWA UL & FM pressure rating.

SMOOTH WATERWAY CONSTRUCTION —
Oversize waterway.
No recesses to trap debris or obstruct flow.
Reduces pumping costs.

DUCTILE IRON OPERATING NUT
provides strength and durability.

THRUST WASHERS
minimize operating torque.

FUSION-BONDED-EPOXY COATING INSIDE AND OUT
ensures maximum corrosion resistance for long service life.

EPDM RUBBER-ENCAPSULATED DUCTILE IRON WEDGE
ensures drop tight seal every time with low stem torque.

FEATURES/BENEFITS/SPECIFICATIONS

FEATURES

The **Series 2500** Ductile Iron 250 p.s.i.g. AWWA Resilient Wedge Gate Valve is designed for use in drinking water, sewage, and fire protection systems as well as irrigation and backflow control systems.

Ductile Iron Construction

The ductile iron body, bonnet, and wedge provide strength and a pressure rating that meets or exceeds the requirements of AWWA C515. Strength more than doubles that provided by cast gray iron designs, and the pressure rating is 250 p.s.i.g. All this strength and higher pressure rating is provided in a compact, lightweight, and easy-to-handle ductile iron valve.

Fusion-Bonded Epoxy

The **Series 2500** valve is fully epoxy coated on the interior and the exterior. The fusion-bonded coating is applied prior to assembly so that even the bolt holes and body-to-bonnet flange surfaces are fully epoxy coated.

Triple O-Ring Stem Seals

This valve features triple O-Ring stem seals. Two O-Rings are located above, and one O-Ring is located below the thrust collar. The lower two O-Rings provide a permanently sealed lubrication chamber that will make the valve easier to operate over a longer period of time. The upper O-Ring ensures that sand, dirt, or grit cannot enter the valve to cause damage to the lower O-Rings. This is especially important for buried and sewage service applications.

Thrust Washers

Two thrust washers are used. One is located above, and one is located below the thrust collar. These thrust washers ensure easy operation at all times.

No Flat Gaskets

The body-to-bonnet and bonnet-to-bonnet cover seals are pressure-energized O-Rings. This eliminates the need for excessive bolt loading, which is required by designs that use flat gaskets. The O-Rings are reusable, which eliminates downtime during any needed repair.

The **Series 2500** Resilient Wedge Gate Valve is furnished in configurations that are Listed by Underwriters Laboratories, Inc. and Approved by Factory Mutual Research Corp.

BENEFITS

The **Series 2500 Ductile Iron Resilient Wedge Gate Valve** has these standard features:

- UL Listed-FM Approved
- Seat Tested at 500 p.s.i.g.
- Fusion-Bonded-Epoxy Coating Complies With ANSI/AWWA C550
- 250# Raised Face Flanges Available
- Ductile Iron Body, Bonnet, Wedge, Operating Nut, and Stuffing Box
- Shell Tested at 500 p.s.i.g.
- 250 p.s.i.g. AWWA UL and FM Pressure Rating
- Rubber-Encapsulated Wedge
- Triple O-Ring Stem Seals
- Thrust Washers
- Smooth (No Pocket) Waterway
- 100% Leak-Tight Closure
- NSF Standard 61 Certified
- Complies with AWWA C515

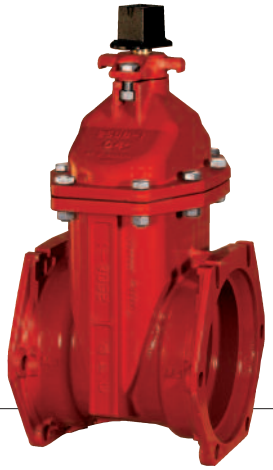

SPECIFICATIONS

Valves 2"-12" shall be resilient wedge type rated for 250 p.s.i.g. cold water working pressure. All ferrous components shall be ductile iron, ASTM A536. Valves 3"-12" shall be in full compliance with AWWA C515. The words "D.I." or "Ductile Iron" shall be cast on the valve. The wedge shall be ductile iron or bronze encapsulated with EPDM rubber.

The wedge shall be symmetrical and seal equally well with flow in either direction.

The gate valve stem and wedge nut shall be copper alloy in accordance with Section 4.4.5.1 of the AWWA C515 Standard. Stainless Steel stems are not acceptable. The NRS stem must have an integral thrust collar in accordance with Section 4.4.5.3 of AWWA C515 Standard. Two-piece stem collars are not acceptable. The wedge nut shall be independent of the wedge and held in place on three sides by the wedge to prevent possible misalignment.

Valves shall be certified by NSF to Standard 61.

Bolting materials shall develop the physical strength requirements of ASTM A307 and may have either regular square or hexagonal heads with dimensions conforming to ANSI B18.2.1. Metric size socket head cap screws, therefore, are not allowed.

The operating nut shall be constructed of ductile iron and shall have four flats at stem connection to ensure even input torque to the stem.

All gaskets shall be pressure-energized O-Rings.

Stem shall be sealed by three O-Rings. The top two O-Rings shall be replaceable with valve fully open and while subject to full rated working pressure. O-Rings set in a cartridge shall not be allowed.

Valve shall have thrust washers located with (1) above and (1) below the thrust collar to ensure trouble-free operation of the valve.

All internal and external surfaces of the valve body and bonnet shall have a fusion-bonded-epoxy coating, complying with ANSI/AWWA C550, applied electrostatically prior to assembly.

Valves shall be American Flow Control's **Series 2500 Ductile Iron Resilient Wedge Gate Valve.**

DRAWING/DIMENSIONS

SERIES 2500 – STANDARD NRS DIMENSIONS 2"-12" SIZES

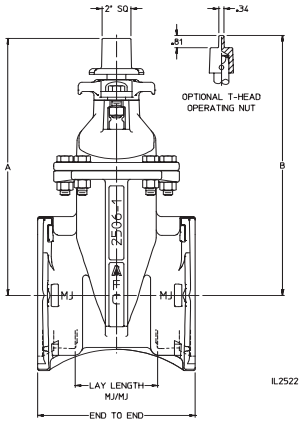

SHOWN WITH 2" OPERATING NUT

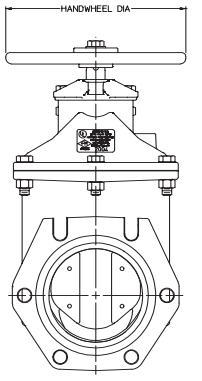

SHOWN WITH OPTIONAL HANDWHEEL

SUBMITTAL DATA

QUANTITY							
2"	2-1/2"	3"	4"	6"	8"	10"	12"
							1

☐ NRS with 2" Sq. Oper. Nut ☐ NRS with T-Head Oper. Nut
☒ NRS with Handwheel ☐ Post Indicator Valve (PIV)
☐ OS & Y

ACTUATOR (Check One)
☐ NRS with Enclosed Miter Gearing
☐ 2" Sq. Oper. Nut Parallel to Waterway
☐ 2" Sq. Oper. Nut Perpendicular to Waterway
☒ Handwheel Perpendicular to Waterway

Open Direction:	☒ Left (C.C.W.)	☐ Right (C.W.)
End Connections:	Flanged	
Mechanical Joint Accessories:	☐ Yes	☒ No
UL Listed, FM Approved:	☐ Yes	☐ No
Other Requirements (List on a separate sheet):		

See notes at bottom of page.

DIMENSION	VALVE SIZE							
	Series 2500			Series 2500-1				
	2"	2-1/2"	3"	4"	6"	8"	10"	12"
A	9.25	11.03	11.84	13.91	17.12	20.47	24.06	27.59
B	10.22	12.00	N/A	N/A	N/A	N/A	N/A	N/A
End to End – MJ/MJ	8.25	N/A	8.62	10.00	10.50	11.50	12.50	13.50
Lay Length – MJ/MJ	3.25	N/A	3.62	5.00	5.50	6.50	7.50	8.50
End to End – FL/FL (Class 125)	7.00	7.50	8.00	9.00	10.50	11.50	13.00	14.00
End to End – FL/FL (Class 250)	N/A	N/A	11.12	12.00	15.88	16.50	18.00	19.75
End to End – TY/TY	N/A	N/A	N/A	13.00	15.88	17.50	18.75	19.75
End to End – FL/MJ (Class 125)	N/A	N/A	N/A	9.50	10.50	12.28	13.62	14.38
End to End – FL/TY (Class 125)	N/A	N/A	N/A	11.00	13.19	14.50	15.88	16.88
End to End – PVC/PVC	10.75	11.12	11.38	13.00	15.88	17.50	N/A	N/A
End to End – Threaded	6.25	7.38	7.38	N/A	N/A	N/A	N/A	N/A
Handwheel Diameter	8.06	8.00	8.00	10.00	12.00	14.00	15.50	15.50
No. of Turns to Open	9	11	13	14	20	26	32	38

1. 3" through 12" valves meet or exceed requirements of ANSI/AWWA C515.
2. 2-1/2" through 12" valves may be ordered in configurations which are UL Listed and/or FM Approved.
3. 2" through 12" valves have 250 p.s.i.g. AWWA rated working pressure.
4. 2-1/2" through 12" valves have 250 p.s.i.g. UL and FM rated working pressure.
5. Fusion-bonded-epoxy coating meets or exceeds requirements of ASME/AWWA C550.
6. Flanged ends are in accordance with ANSI/AWWA C110/A21.10 (ASME B16.1, Class 125).
7. Threaded ends are in accordance with ASME B16.4, Class 125.
8. Mechanical joint ends are in accordance with ANSI/AWWA C111/A21.11.
9. Tyton® ends and push-on ends are in accordance with ANSI/AWWA C111/A21.11 for use on cast iron (CI) size ductile iron pipe.
10. PVC ends are suitable for use on steel (IPS) sizes of PVC or steel pipe.
11. 4" through 36" valves are certified to ANSI/NSF Standard 61.
12. It is recommended that stems be vertical in raw sewage applications.

DRAWING/DIMENSIONS/PARTS LIST

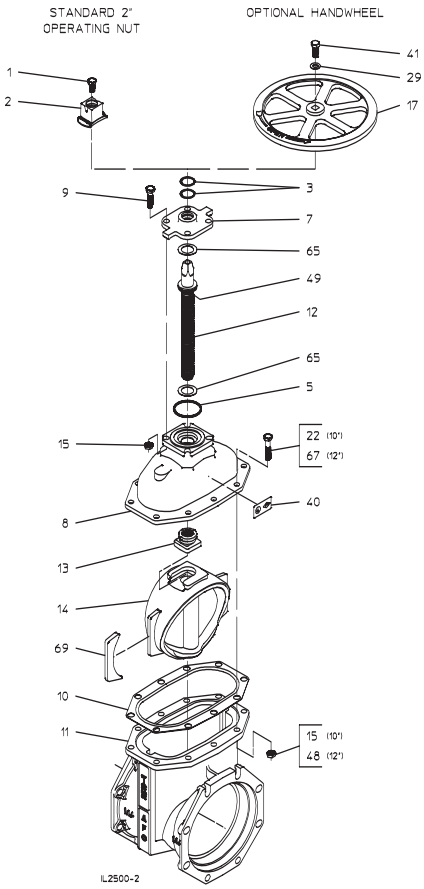

SERIES 2500-1 – STANDARD NRS PARTS LIST
10" & 12" SIZES

REFERENCE NUMBER	DESCRIPTION	MATERIAL	QTY Series 2500-1	
			10"	12"
1	Hex Head Bolt, 5/8-11 x 1"	Stainless Steel	1	1
2	Operating Nut, 2" Square	Ductile Iron	1	1
3	O-Ring	Nitrile Rubber	2	2
5	Stuffing Box Gasket	Nitrile Rubber O-Ring	1	1
7	Stuffing Box	Ductile Iron	1	1
8	Bonnet	Ductile Iron	1	1
9	Hex Head Bolt, 5/8-11 x 2"	Stainless Steel	4	4
10	Bonnet Gasket	EPDM Rubber	1	1
11	Body	Ductile Iron	1	1
12	Stem	Manganese Bronze	1	1
13	Wedge Nut	Manganese Bronze	1	1
14	Resilient Wedge	Ductile Iron, Encapsulated with EPDM Rubber	1	1
15	Hex Nut, 5/8-11	Stainless Steel	14	4
17	Handwheel	Ductile Iron	1	1
22	Hex Head Bolt, 5/8-11 x 2-3/4"	Stainless Steel	10	–
29	Flat Washer, 5/8	Stainless Steel	1	1
40	UL/FM Label	Pressure-Sensitive Acrylic Film	1	1
41	Hex Head Bolt, 5/8-11 x 1-1/2"	Stainless Steel	1	1
48	Hex Nut, 3/4-10	Stainless Steel	–	10
49	O-Ring	Nitrile Rubber	1	1
65	Thrust Washer	Stainless Steel	2	2
67	Hex Head Bolt, 3/4-10 x 3"	Stainless Steel	–	10
69	Wedge Cover	Acetal	2	2

American Flow Control

American-Darling Valve and Waterous

A Division of American Cast Iron Pipe Company

http://www.acipco.com/afc

American-Darling Valve
P.O. Box 2727
Birmingham, AL 35202-2727
Phone: 1-800-326-7861
Fax: 1-800-610-3569
e-mail: bpatton@acipco.com

Waterous Company
125 Hardman Avenue South
South St. Paul, MN 55075-1191
Phone: 1-888-266-3686
Fax: 1-800-601-2809
e-mail: medybedahl@waterousco.com

Distributed By:

AFC-4/05-6M

Operation

1. Direction of opening is indicated by an arrow cast on the handwheel or wrench nut of the valve.
2. Operate gate valves from full closed to full open position and back before applying pressure.
3. Close gate valve slowly against pressure to avoid damage from surge or water hammer.
4. Valves installed on liquid service subject to freezing conditions should be protected to prevent trapping of liquid in the bonnet cavity, expansion on freezing and subsequent damage. The same is true of valves which are subject to considerable temperature increases. Trapped pressure should be vented back to the upstream side to prevent buildup of pressure in the valve bonnet due to high temperature expansion.
5. Valves should be opened and closed without the use of excessive torque applied to the handwheel or wrench nut. Excessive torque may damage the valve.

Maintenance

1. Operate gate valves from full open to full close at regular intervals. The length of time between operations depends upon the time of installation and the service conditions.
2. Use Mystic FG−2 or equivalent food grade grease for the stem threads and thrust collar.
3. Chipped spots in the epoxy coating should be repaired with a liquid two part epoxy.

⚠ CAUTION

To prevent possible personal injury, do not remove bonnet bolts with valve under pressure.

Spare Parts

Under most conditions, the only spare parts needed for the valve would be upper and lower stem O−rings. Under rigorous service, stems, wedges, upper and lower stem O−rings and thrust washers should be carried as spare parts.

Use parts list drawings as a guide for disassembly and ordering repair parts. Also refer to disassembly/reassembly instructions.

Typical Operating Torque At Rated Working Pressure

Valve Size	Closing Torque Ft−lbs	Opening Torque Ft−lbs
2”	15−20	15−20
2−1/2”	15−20	15−20
3”	30−40	30−40
4”	30−40	30−40
6”	50−60	50−80
8”	70−80	60−90
10”	90−100	125−150
12”	100−125	140−175
14”	Contact Factory	
16”	Contact Factory	
18”	Contact Factory	
20”	Contact Factory	
24”	Contact Factory	
30”	Contact Factory	
36”	Contact Factory	
42”	Contact Factory	
48”	Contact Factory	

SERIES 2500 − TROUBLESHOOTING GUIDE

<table>
<tr><th>Problem</th><th>Solution</th></tr>
<tr><td>Leakage</td><td>
Depending on the location of the leakage, the following should be examined.
1. SEAT: Foreign material may be stuck under the valve wedge. Open valve only enough to get high velocity flow to flush out valve. Repeat several times until leak stops. If this does not solve the problem it is then necessary to open the valve and check for damage to the rubber encapsulated wedge. If it is damaged or severely cut, replace the wedge.
2. STEM: The stem seals are of the O−ring type and the valve has a thrust collar (electric actuated valves normally do not have thrust collars). The seals can be replaced while the valve is under water pressure by back seating the valve in the open position. On OS&Y valves leakage can be stopped by evenly tightening the packing gland bolts. If leakage cannot be stopped, the valve should be repacked.
3. BODY: Check for cracked or damaged valve body or bonnet. If damage has occurred, contact manufacturer for further instructions.
4. BOLTED CONNECTIONS: Check for loose bonnet to body bolts, stuffing box bolts or end joint bolts and tighten as necessary. This should be done prior to pressurization of the line. If line is pressurized, pressure should be relieved prior to tightening any bolts. Do not tighten bolts past the yield strength of the bolt. Reinstall all bolts and nuts and tighten alternately to 70−90 ft.−lbs. of torque.
</td></tr>
<tr><td>Valve is Hard to Operate or is Inoperable</td><td>
1. A valve can become inoperable or hard to operate during testing of the pipeline. Prior to relieving pipeline pressure, the valve should be opened to relieve any trapped pressure.
2. The application of excessive torque on a valve can cause permanent damage to the operating parts. A common source of excessive torque is from the use of portable power actuators. Output torques generated by these machines should be adjusted to be suitable for the valve size. The last or first turns of operation should be done by hand.
Number of Turns to Open/Close
<table>
<tr><th colspan="3">Series 2500</th><th colspan="5">Series 2500−1</th><th colspan="8">Series 2500</th></tr>
<tr><td>2”</td><td>2−1/2”</td><td>3”</td><td>4”</td><td>6”</td><td>8”</td><td>10”</td><td>12”</td><td>14”</td><td>16”</td><td>18”</td><td>20”</td><td>24”</td><td>30”</td><td>36”</td><td>42”</td><td>48”</td></tr>
<tr><td>9</td><td>11</td><td>13</td><td>14</td><td>20</td><td>26</td><td>32</td><td>38</td><td>44</td><td>50</td><td>56</td><td>62</td><td>73</td><td>568</td><td>672</td><td>694</td><td>789</td></tr>
</table>
3. If valve has not been operated periodically, excessive buildup could occur that would affect valve operation. The valve should be exercised one turn at a time and cycled from open to closed as necessary to attempt removal of internal buildup.
</td></tr>
<tr><td>Valve Leaks During Testing</td><td>
1. Resilient seated gate valves per AWWA C−515 have a zero allowable leakage rate. If a leak is detected while testing, it is necessary to find the cause.
2. If seat leakage is detected, it may be due to trapped air in the line or foreign material. Open the valve enough to get high velocity flow to flush out valve. Repeat several times until leakage stops.
3. If testing between valves, allow enough time to fill the valve and vent off air.
</td></tr>
</table>

Disassembly

⚠ WARNING

To prevent possible personal injury, do not make repairs while valve is under pressure.

1. Remove bolts and nuts that attach operating nut and stuffing box.
2. Remove operating nut and stuffing box.
3. Back stem out of bonnet by turning in the closing direction.
4. Inspect O−rings and, if damaged, remove from stuffing box and stem. Replace with new O−rings and lubricate with food grade grease.
5. Inspect thrust washers and stuffing box gasket (O−ring) and replace if damaged.
6. Remove bolts and nuts that attach bonnet to valve body. Remove bonnet to inspect bonnet gasket, wedge nut, wedge and interior of valve body. Replace parts if damaged.

Reassembly

Reassembly is the reverse of disassembly while paying attention to the following points.

1. Make sure wedge nut is seated fully into slot in wedge.
2. Make sure the bonnet gasket is positioned correctly on the valve body flange when bonnet is assembled onto valve body.
3. Lubricate stem threads before installing into bonnet and threading into wedge nut. Turn stem in opening direction.
4. Position stuffing box gasket in top of bonnet and slide stuffing box onto stem being careful not to cut the stem seal O−rings.
5. Reinstall all bolts and nuts and tighten alternately to 70−90 ft.−lb. of torque.

SERIES 2500 – STANDARD NRS REPAIRS

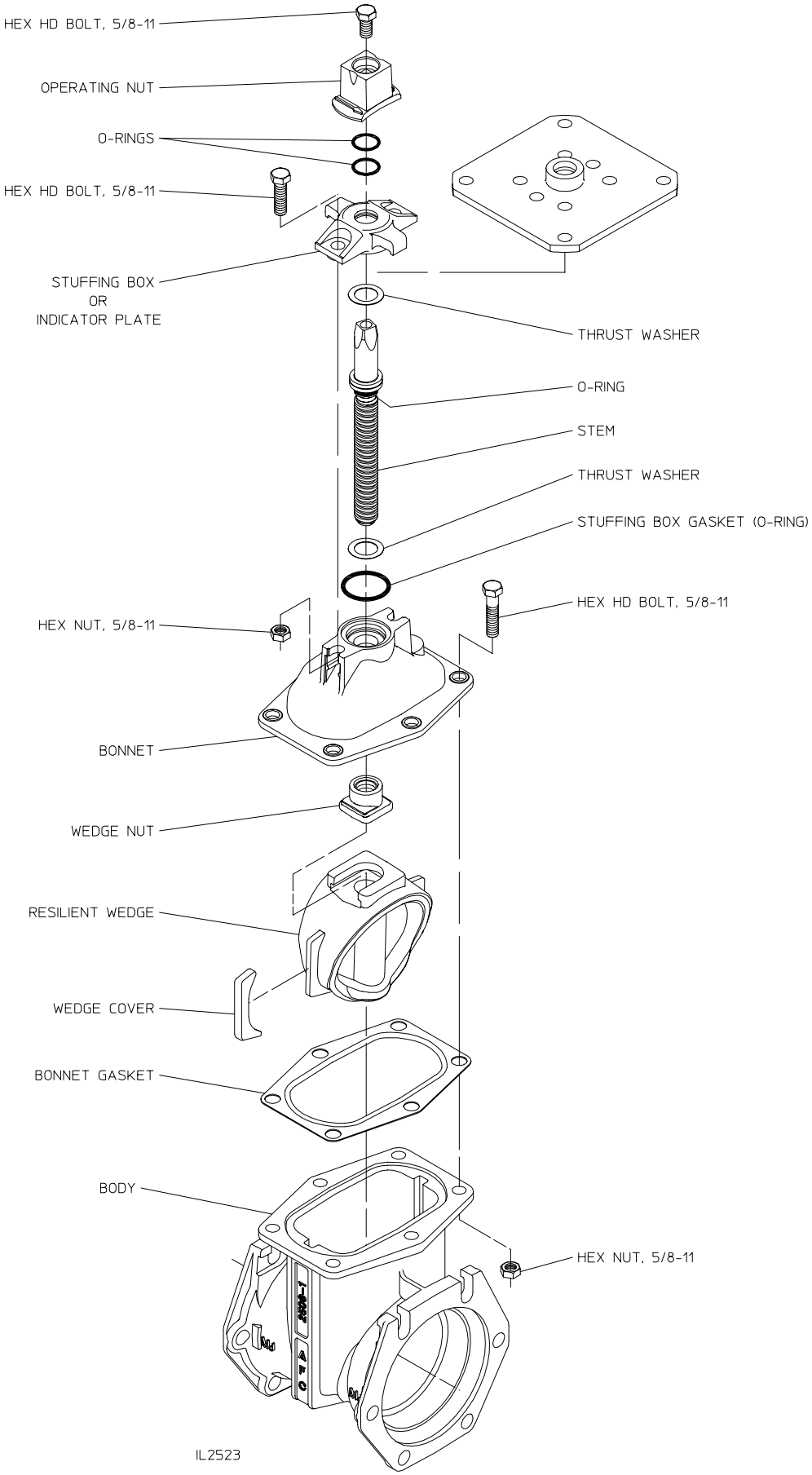

FLAP VALVE

TABLE OF CONTENTS:

A. DATA SHEETS

B. INSTALLATION INSTRUCTIONS

MANUFACTURER: **WATERMAN**

MODEL #: **PF-25F**

SIZE: **18”**

SUPPLIER

HD SUPPLY WATERWORKS, LTD.
CONTACT: ERIC RIPPER
5000 FRANKLIN AVENUE
WACO, TEXAS 76170
(254) 772-7910

PF-25 CAST IRON FLAP VALVES

FOR PUMP DISCHARGE

FLANGE STYLE

Waterman Model PF-25 flap valves are designed for use on pump discharge lines and other pipe end closures to prevent entrance of back water. These valves are furnished with a variety of frame styles to fit most installation needs. A 7½° inclined seating plane is used to ensure that the valve will not "hang open" from slight pipe sagging or off grade. A positive stop prevents over opening.

The flange model (PF-25F) may be furnished with either iron or bronze seat faces. Bronze hinge pins are standard. Drilling is ANSI 125 lb. standard.

Model PF-25F

- **Cast Iron Body**
- **Flange or Compression Mounted**
- **Cast Iron Cover**
- **Aluminum Cover Optional**
- **Cast Iron, Bronze or Resilient Seat Faces**
- **Bronze Hinge Pins**
- **7½° Seating Plane**

COMPRESSION STYLE

The popular compression model (PF-25W) uses time proven wedge type seals to install quickly and easily on plain end standard steel pipe. A special gasket is furnished for use with O.D. sized steel pipe. This model is standard with a cast iron frame with machined seat face and a cast iron cover with a resilient neoprene rubber seat face. Follow ring is cast iron with rubber wedge gasket and plated steel draw bolts.

Valves are available with aluminum covers and neoprene seat faces where extra sensitivity is desired. Taper setting collars can be provided as an aid for installation on concrete pipe.

Model PF-25W

PF-25F FLAP VALVE

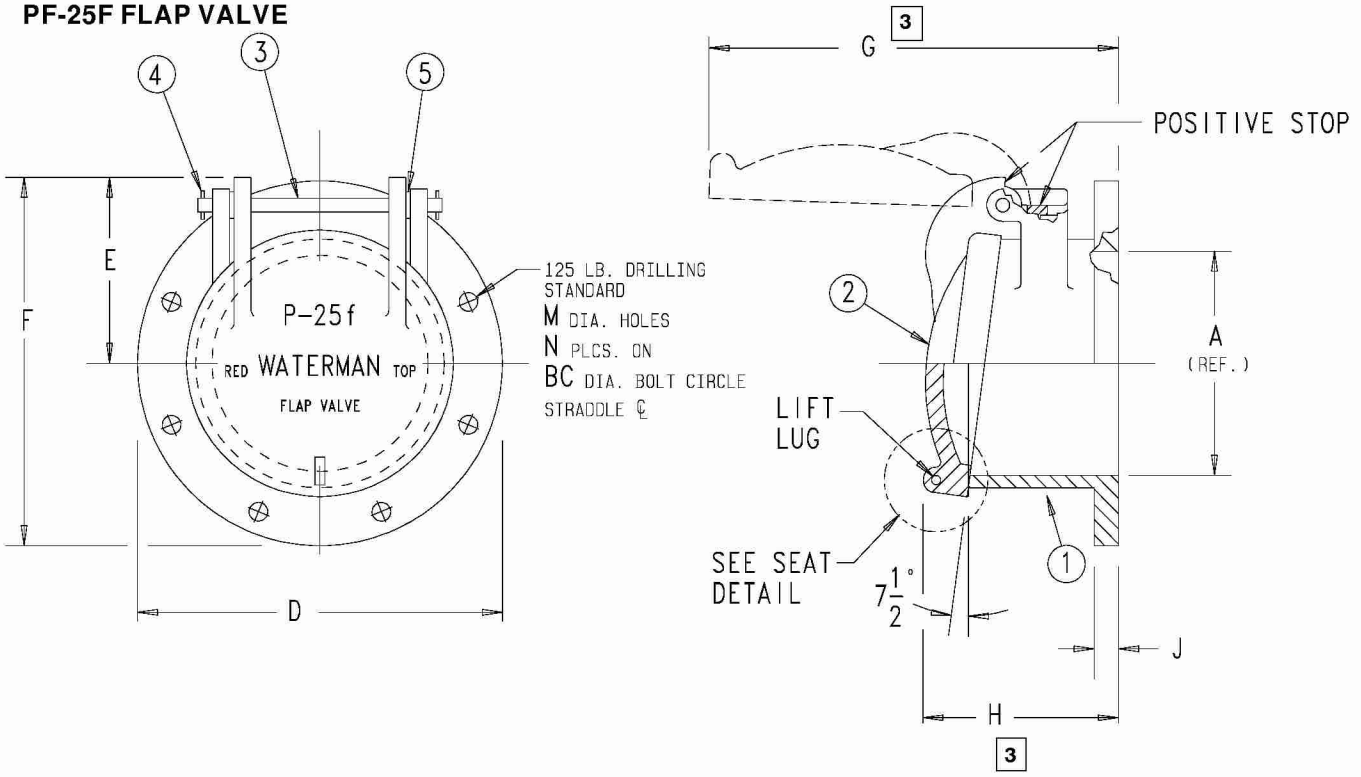

ALTERNATE SEATS AVAILABLE

MACHINED IRON

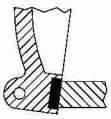

RESILIENT SEAT IN COVER. MACHINED IRON SEAT BODY*

BRONZE SEAT COVER & BODY

*standard configuration

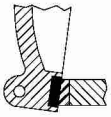

RESILIENT SEAT IN COVER. BRONZE SEAT IN FRAME

PARTS LIST	
No.	**Name**
1	BODY(flanged)
2	COVER
3	HINGE PIN
4	SPRING PIN
5	WASHER

1. Designed for use on pump discharge lines.
2. 25 Lb. drilling available on request.
3. If grout pad mounting is used, add grout thickness to dimensions.

GATE DIMENSIONS IN INCHES

GATE SIZE A	4	6	8	10	12	14	16	18	20	24
BC	7½	9⅛	11¾	14¼	17	18¾	21¼	22¾	25	29½
D	9	11	13½	16	19	21	23½	25	27½	32
E	4⅝	5 11/16	6⅞	8⅛	9⅜	10 7/16	11⅝	12¼	13⅜	15½
F	9⅛	11 3/16	13⅝	16⅛	18⅞	20 15/16	23⅜	24¾	27⅛	31½
G	8¼	11⅞	14¼	16¼	18⅝	22¼	24¼	26¼	28¾	32¾
H	6¼	7⅝	8	8	8½	10½	10½	10½	11	11
J	1	1	1	1	1	1	1	1⅛	1⅛	1¼
M	¾	⅞	⅞	1	1	1⅛	1⅛	1¼	1¼	1⅜
N	8	8	8	12	12	12	16	16	20	20

SPECIALTY PRODUCTS INSTALLATION INSTRUCTIONS

FOREWORD

The purpose of this manual is to provide the contractor with all pertinent information for the proper installation of our specialty equipment. Although every care is taken in our factory to insure top quality equipment, we cannot be responsible for damage caused by negligence after shipping. Therefore, described herein are Waterman's recommended methods of handling, storage, installation, adjustment and initial operation for standard situations, to be used in conjunction with the approved installation drawings provided by Waterman Industries, Inc. If proper care and accuracy are exercised in the field when installing our equipment, they will operate as designed at maximum efficiency.

RECEIVING, HANDLING AND STORAGE

✓ **Check count** on all parts when you receive a shipment, noting any shortages immediately. We cannot be responsible for shortages reported after any lengthy delay. Special care should be taken in accounting for and safely storing all bolts, nuts, and small items which are often misplaced at jobsites. Waterman double counts these parts to assure accuracy.

All Waterman gates and appurtenances are precision machinery and should be handles accordingly. While all parts are of a rugged design, it is nevertheless possible to warp machined surfaces, stems, etc., through improper storage and handling. To avoid all problems of this nature we recommend the following:

1. Handle equipment with care. Avoid damaging machined flanges. Do not drop or walk on this equipment.
2. Support full length of stems at all times, being sure not to damage threads.
3. Store equipment on an even, clean, dry surface to prevent distortion.
4. Cover all equipment to protect machined surfaces.
5. Do not stack equipment without protection.
6. Handle lifts as you would any precision machinery.

MODEL MV-11 MUD VALVES

INSTALLATION:

1. Mount valve on pipe flange with mastic or rubber gasket.
2. Install stems, guides, lifts, and/or floorboxes as indicated on the submittal drawing.
3. Be sure that the operating stem or extension stem is vertical and plumb.
4. Level the floorstand (if used).

LUBRICATION:

1. Handwheel lifts that are equipped with grease fittings should be lubricated every 3 month with mobil #3EP or equal.
2. Handwheel lifts that are not equipped with grease fittings do not require lubrication.
3. The mud valve requires no lubrication or service.

OPERATION:

The handwheel of 2" square operating nut will have a directional arrow for the "open" movement. Operate the handwheel or "T" handle as needed.

TELESCOPING VALVE

INSTALLATION:

1. Attach gasket and retaining flange to pipe flange.
2. Insert valve body into gasket. Grease or a cardboard "funnel" may be used to aid in installation. Take care to not tear the gasket.
3. Install stem and stem guides (or rack) as shown on the submittal drawing.
4. Level the floorstand as required.

5. Be sure that the stem (or rack) is plumb, and set the limit nuts.
6. With the valve in the full down position, the mylar indicator may now be attached to the stem cover (if included with valve).
7. Usually, when the valve is in the full "up" position, one "diameter" of the valve body will remain below the gasket.

LUBRICATION:

1. Lift assemblies that are equipped with grease fittings should be lubricated every 3 months with mobil #3EP or equal.
2. Lifts without grease fittings, including type 5 OP rack and pinion lifts, require no lubrication.
3. Stem threads should be greased every 4 months.
4. Racks require no lubrication.
5. The valve requires no lubrication.

OPERATION:

The handwheel will have a directional arrow and the word "open" on the rim. Rotate the handwheel as necessary.

If the valve is equipped with an electric motor operator consult the manual that was provided with the operator.

If equipped with rack and pinion lift, turn handwheel to raise. To lower, release pawl and turn handwheel.

MODEL C-7 AND C-16 SHEAR GATES

INSTALLATION:

1. Attach the gate to the flange. A mastic or rubber gasket is recommended between the frame ring and the pipe flange.
2. The lift rod is equipped with an adjustable lug. A bracket should be provided for the lug to hook onto to hold the cover open.
3. Closure is accomplished by lowering the cover onto the wedges on the frame.

MAINTENANCE:

Shear gates require no service or lubrication.

PRESSURE RELIEF VALVES

FLOOR TYPE - PRF-14

INSTALLATION:

1. Locate in forms as required. The top flanges should be flush with or slightly above the finished floor.
2. Protect the seats from foreign materials.
3. Place the concrete or grout in position.
4. Warning - the seats are easily damaged. Do not walk on or place equipment on these valves.
5. Be sure seats are clean and not deformed before placing the valves into service.
6. No maintenance or lubrication is required.

WALL TYPE - PRB-14

INSTALLATION:

1. Mount valve on pipe flange using a rubber or mastic gasket between the valve and flange.
2. Be sure mounting flange is plumb.
3. Be sure seats are clean and undamaged before placing the valve into service.
4. This valve is factory set and is not adjustable for sensitivity.

MAINTENANCE:

1. No maintenance or lubrication is required.

STOP GATES

INSTALLATION:

WALL MOUNTED TYPE

1. Bolt frame to the wall as required with a mastic gasket between the frame and wall.
2. Check to be sure the frame is square, vertical and plumb.
3. Slide plate should move freely without binding.

EMBEDDED TYPE

1. Brace frame in blockout as shown in the submittal drawing.
2. Keep the slide in the frame.
3. Be sure that the frame is square, vertical and plumb.
4. Grout frame in place as required.
5. Be sure frame groove is clean and free of foreign material.

GATE WITH J-BULB SEALS

1. After installation in complete, check the clearance between the seal and the slide plate with a .004" feeler gauge
2. If the feeler gauge will not fit between the seal and the slide no adjustment is necessary.
3. If adjustment is necessary, loosen the J-bulb retainer bolts and move the seal against the slide until the rubber is slightly compresses. Then, tighten the bolts again.

MAINTENANCE:

Stop gates require no service or adjustment.

ALFALFA VALVES

INSTALLATION SUGGESTIONS:

TYPE 1 - WEB

Place grout on concrete riser, set valve. Add additional grout and trowel with laying glove to fill voids between web. After grout has dried, check and regrout any voids.

Caution - seat rings must be free of grout for at least 3/8" below surface. Valve should not be banded on outside when hook type hydrant will be used.

Note - this valve setting may be strengthened for use with higher heads or severe surges by tying reinforcing wire into web before grouting.

TYPE 2 - QUICK SETTING

Invert frame and fill cavity with heavy grout and/or place grout on top of riser pipe. Quickly turn frame over onto risers, rotating slightly to assure firm contact. Trowel inside edge. Clean seat and threads.

Note - The grouting cavity is large enough to accommodate most reinforced pipe as well as standard irrigation sizes.

TYPE 3 - FOR O.D. SIZE STEEL PIPE

Place on pipe and weld or braze. Preheating and slow cooling are recommended for fracture free attachment. An epoxy cement can also be used for attaching. Pipe should be clean (blast or wire brush) and care taken to leave no voids between pipe and frame. Frame may also be attached by drilling and bolting through, using a suitable mastic for the seal between pipe and frame.

TYPE 4 - FOR I.D. LOWHEAD PLASTIC PIPE

METHOD #1 INSTALLATION:

Press valve into inside of riser pipe and secure with two draw bands. Heat pipe if needed to allow valve spigot to enter pipe I.D.

METHOD #2 INSTALLATION:

Using #1950 or #10 I.P.S. two-part epoxy or equal, apply cement to outside surface of valve skirt and inside surface of riser. Press firmly into riser, rotating 1/4 turn.

TYPE CIP - "EASY MOUNT" FOR PLASTIC PIPE

(CIP-PIP for plastic irrigation pipe size pipe - CIP-IPS for iron pipe size plastic pipe)

INSTALLATION SUGGESTIONS:

Prime inside of plastic valve skirt and outside of pipe riser. Apply PVC cement to same surfaces and immediately press valve firmly onto riser, rotating a 1/4 turn as you set valve.

H-30FF, HD-30FF AND AH-30FF FLANGED GATE VALVES

INSTALLATION:

1. Utilizing studs and gaskets, mount the flanges to corresponding pipe flanges. On valves that accommodate flow in one direction only, be sure flow arrow on valve is properly oriented.

MAINTENANCE:

Grease zirk fitting on packing collar as needed. Do not overfill.

OPERATION:

1. Turn in direction of arrow on handwheel to open, opposite to close.

H-30-1 LINE GATE

1. Orient gate with the flow arrow (cast in the gate body) in proper relation to the direction of flow in the pipe.
2. Push gate hub over the outside of the pipe so that it is as nearly centered as possible, butting the stop ring on the inside of the hub against the end of the pipe. (Thrust blocking is recommended, especially on gates 24" and larger, to prevent settling of the gate and subsequent rupture of the seal between the gate and pipe.)
3. Supporting the gate firmly in place, apply a dry pack mortar mixture to the gap between the hub and pipe, making sure to seal all the way around, including the bottom of the pipe.
4. Repeat the above procedure for the opposite side of the gate, except pushing the pipe into the hub.
5. When dry, use a wetter mortar mixture to smooth over the dry pack joint to ensure a tight seal.

NOTES

BUTTERFLY VALVE WITH MOTOR OPERATOR

TABLE OF CONTENTS:

A. BUTTERFLY VALVE

B. ELECTRIC MOTOR OPERATOR

SUPPLIER

CONTROLS INTERNATIONAL, INC.
CONTACT: RAND UNDERWOOD
10410 VISTA PARK ROAD
DALLAS, TEXAS 75238
(214) 343-9980

BUTTERFLY VALVE

TABLE OF CONTENTS:

A. DATA SHEETS

B. INSTALLATION, OPERATION AND MAINTENANCE MANUAL

MANUFACTURER: **GOLDEN-ANDERSON**

MODEL #: **AWWA C504, CLASS 150B**

SIZE: **24”**

GA Industries Inc.
SINCE 1895
MANUFACTURERS OF GOLDEN ANDERSON® VALVES

AWWA
BUTTERFLY VALVES
PER ANSI/AWWA C504/CLASS 150B

DID YOU KNOW?

GA Industries has been designing and manufacturing “Flow Control Products”, including Butterfly Valves, for the municipal and industrial water market for over a century. GA Industries products have been successfully installed in every state in the U.S. and in most countries throughout the world. Applications range from small simple lever-operated, open/close Butterfly Valves, to an 84” Butterfly Valve for NASA, installed in Huntsville, Alabama as part of the Saturn Missile Project. GA Industries maintains an engineering staff that is acknowledged throughout our industry as the experts when it comes to subjects such as surge, waterhammer and cavitation. GA Industries production facilities include automatic CNC machining centers ranging from small to large multi-palleted CNC machines, to a full range of CNC turning equipment, to large 7-axis CNC equipment. Our modern foundry, located in New England, is capable of producing cast iron, ductile iron and ni-resist in castings as large as 35,000 pounds each. GA Industries personnel are experienced, knowledgeable and familiar with the municipal as well as the industrial valve market. They can be counted on to provide recommendations on products for your application. Give us a call. We care about the products we build and would like the opportunity to serve you.

Table of Contents

Page No.

Features & Advantages 3

3” - 24” Butterfly Valve – 125# Flg. End Design 4-5

3” - 20” Butterfly Valve – Wafer Design 6-7

3” - 24” Butterfly Valve – Mechanical Joint Design 8-9

Worm Gear Actuators 10

Traveling Nut Actuators 11

Ten Position Handle Actuators 12

GA Industries Inc.
SINCE 1895
MANUFACTURERS OF
GOLDEN ANDERSON® VALVES

FEATURES & ADVANTAGES

AWWA C504, CLASS 150B, BUTTERFLY VALVES

BODY

Heavy duty cast iron furnished standard, with ductile iron available as an extra cost option. Flanged Valves are faced and drilled per ANSI B16.1, Class 125. Mechanical Joint Valves are machined per ANSI/AWWA C111/A21.11. Wafer Valves are machined to fit between ANSI B16.1, Class 125 flanges.

SHAFT

Corrosion resistant stainless steel per ASTM A276 Type 304 furnished standard or type 316 furnished as an extra cost option. One piece design on valves sizes 3" to 8" and two piece design 10" and up. Shafts are sized to meet AWWA C504 for Class 150B Butterfly Valves.

BEARINGS

(Upper and Lower)
Fiberglass reinforced nylon bearings are low friction, self-lubricating and provide exceptionally long life.

DISC

Corrosion resistant ASTM A276, Type 316 stainless steel sizes 3", 4" and 6". High strength ASTM-A536, 65-45-12, ductile iron with a 316 stainless steel edge per AWWA C504 and fusion bond epoxy coating on sizes 8" and up. Streamlined lens shaped disc provides minimum headloss. Discs are attached to shafts with 316 stainless steel tapered dowel pins.

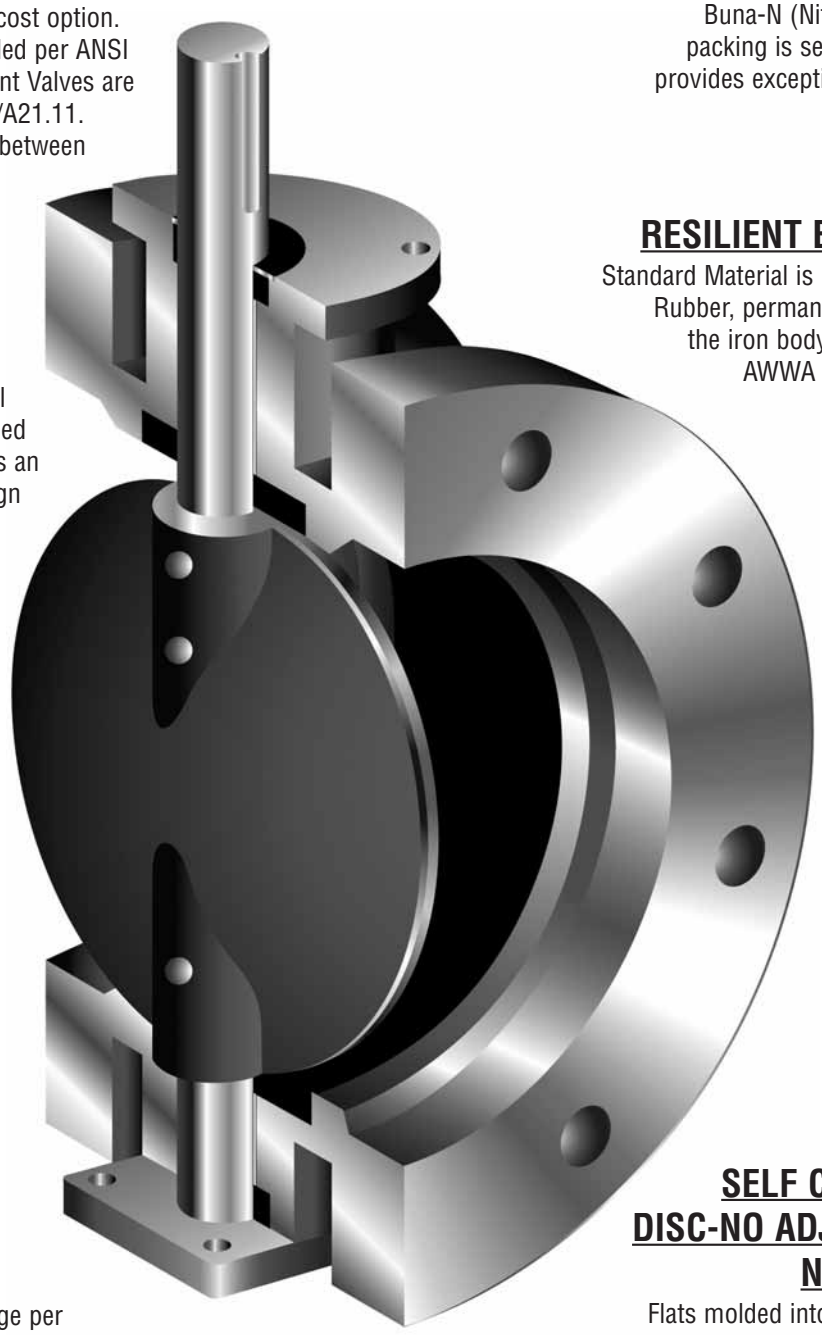

SHAFT SEALS

(Upper and Lower)
Buna-N (Nitrile) Chevron V packing is self adjusting and provides exceptionally long life.

RESILIENT BODY SEAT

Standard Material is Buna-N (Nitrile) Rubber, permanently bonded to the iron body and tested per AWWA Standard C504.

SELF CENTERING DISC-NO ADJUSTMENT NECESSARY

Flats molded into the vulcanized rubber body seat mate with machined flats on the disc to provide positive centering of the disc in the body. Accurate centering of the disc in the body assures maximum seat life.

GA Industries Inc.
SINCE 1895
MANUFACTURERS OF GOLDEN ANDERSON® VALVES

AWWA
BUTTERFLY VALVES
125 LB. FLANGES – CLASS 150B
3" – 24"

STUB END SHAFT – NO ACTUATOR

STREAMSEAL TECHNOLOGY – QUALITY ALWAYS

Series BFV150

More than a century of valve design and manufacturing.

Consult factory for availability of actuators.

Working Pressure

4" through 12" . . . . . 200 psi
14" through 24" . . . . . 150 psi

Hydrostatic Test Pressure

4" through 12" . . . . . 400 psi
14" through 24" . . . . . 300 psi

FEATURES

1. Conforms with AWWA C504
2. Ductile Iron Disc with 316 Stainless Steel Disc Edge
3. Resilient to Stainless Steel Seating
4. Fusion Bonded Epoxy Coated Disc
5. Two-Part Catalized Epoxy Coated Body
6. Rubber Seat Vulcanized into a Groove Machined in Body & Tested on C504
7. Shafts Sized to Meet C504 for Class 150B Butterfly Valves
8. Self-Adjusting Chevron Shaft Packing Easily Accessible
9. Streamlined Lens Shaped Disc Minimizes Headloss
10. Permanently Lubricated Nylon, Fiberglass-Backed Bearings (Provides Lowest Possible Torque)

MATERIALS OF CONSTRUCTION

Part No.	Part Name	Standard Material
1	Body	CI-ASTM A126, B
2	Disc (3" - 6") Disc (8" & up)	316 Stainless DI-ASTM-A536, 65-45-12 w/316 Stainless Steel Edge
3	Seat	Nitrile (Buna-N)
4	Upper Shaft	304 Stainless Steel
5	Taper Pin	316 Stainless Steel
6	Lower Shaft	304 Stainless Steel
7	Bearing	Nylon-W/Fiberglass Back
8	Shaft Seal	Nitrile (Buna-N)
9	O-Ring	Nitrile (Buna-N)
10	Bottom Cover	DI-ASTM-A536, 65-45-12
11	Cover Bolt	Steel, ASTM A-307
NOTE: Extra Cost Upgrades		
1	Body	DI-ASTM A536, 65-45-12
4, 6	Shaft	316 Stainless Steel

NOTE: Also available in a mechanical joint and a wafer design in conformance with AWWA C504.

PARTS LIST

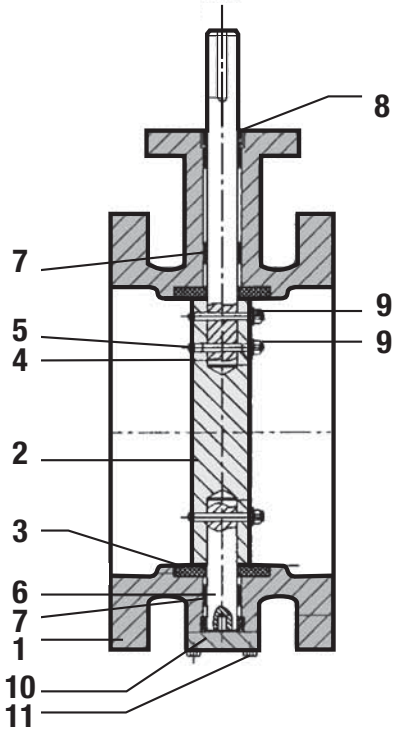

Valves sizes 3"- 8" One Piece Shaft
Valves sizes 10" - 24" Two Piece

GA Industries Inc.
SINCE 1895
MANUFACTURERS OF GOLDEN ANDERSON® VALVES

AWWA
BUTTERFLY VALVES
125 LB. FLANGES – CLASS 150B
3" – 24"

GENERAL DIMENSIONS

VALVE SIZE inches (mm)	A	B	C	E	J	L	P	Q	R	S	T	KEYWAY	U	V	W	X
3 (75)	5 (126)	3-3/4 (95)	6 (152)	1-1/4 (32)	5 (127)	3/4 (19)	4	5/8 (16)	7-1/2 (190)	3/4 (755)	1/2 (13)	3/16 x 3/32 (4.8 x 2.4)	2-9/16 (65)	1-31/32 (50)	4	5/16 (8)
4 (100)	5-3/4 (146)	4-1/2 (115)	7-1/2 (191)	1-1/4 (32)	5 (127)	3/4 (19)	8	5/8 (16)	9 (229)	15/16 (24)	5/8 (16)	3/16 x 3/32 (4.8 x 2.4)	3-1/2 (90)	2-3/4 (70)	4	25/64 (10)
6 (150)	6-25/32 (172)	5-7/8 (149)	9-1/2 (241)	2 (51)	5 (127)	1-1/2 (38)	8	3/4 (19)	11 (279)	1 (25)	1 (25)	1/4 x 1/8 (6.4 x 3.2)	3-1/2 (90)	2-3/4 (70)	4	25/64 (10)
8 (200)	8-1/8 (206)	6-3/4 (171)	11-3/4 (298)	2 (51)	6 (152)	1-1/2 (38)	8	3/4 (19)	13-1/2 (343)	1-1/8 (29)	1-1/8 (29)	1/4 x 1/8 (6.4 x 3.2)	4-7/8 (125)	4-1/64 (102)	4	15/32 (12)
10 (250)	9-13/32 (239)	8-1/16 (205)	14-1/4 (362)	3 (76)	8 (203)	2-1/2 (64)	12	7/8 (22)	16 (406)	1-3/16 (30)	1-3/8 (35)	1/4 x 1/8 (6.4 x 3.2)	4-7/8 (125)	4-1/64 (102)	4	15/32 (12)
12 (300)	11-1/16 (281)	9-1/2 (241)	17 (432)	3 (76)	8 (203)	2-1/2 (64)	12	7/8 (22)	19 (483)	1-1/4 (32)	1-1/2 (38)	3/8 x 3/16 (9.5 x 4.8)	4-7/8 (125)	4-1/64 (102)	4	15/32 (12)
14 (350)	12-1/16 (307)	10-9/16 (268)	18-3/4 (476)	3 (76)	8 (203)	2-1/2 (64)	12	1 (25)	21 (533)	1-3/8 (35)	1-3/4 (44)	3/8 x 3/16 (9.5 x 4.8)	6-7/8 (175)	5-33/64 (140)	4	45/64 (18)
16 (400)	13-3/8 (340)	12-3/16 (310)	21-1/4 (540)	3 (76)	8 (203)	2-1/2 (64)	16	1 (25)	23-1/2 (597)	1-7/16 (37)	2 (51)	1/2 x 1/4 (12.7 x 6.4)	6-7/8 (175)	5-33/64 (140)	4	45/64 (18)
18 (450)	14-3/4 (375)	13 (330)	22-3/4 (578)	4 (101)	8 (203)	3-1/2 (89)	16	1-1/8 (29)	25 (635)	1-9/16 (40)	2-1/4 (57)	1/2 x 1/4 (12.7 x 6.4)	6-7/8 (175)	5-33/64 (140)	4	45/64 (18)
20 (500)	17-1/4 (438)	14-5/8 (372)	25 (635)	4 (101)	8 (203)	3-1/2 (89)	20	1-1/8 (29)	27-1/2 (699)	1-11/16 (43)	2-1/2 (64)	1/2 x 1/4 (12.7 x 6.4)	8-1/4 (210)	6-1/2 (165)	4	29/32 (23)
24 (600)	19-9/16 (500)	17-1/8 (435)	29-1/2 (749)	5 (127)	8 (203)	4-1/4 (108)	20	1-1/4 (32)	32 (813)	1-7/8 (48)	3 (76)	3/4 x 3/8 (19.1 x 9.5)	8-1/4 (210)	6-1/2 (165)	4	29/32 (23)

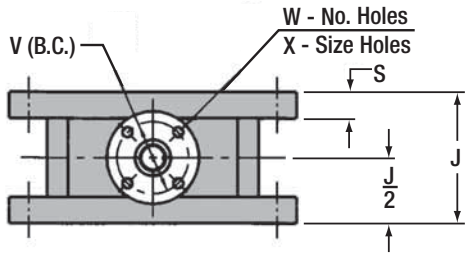

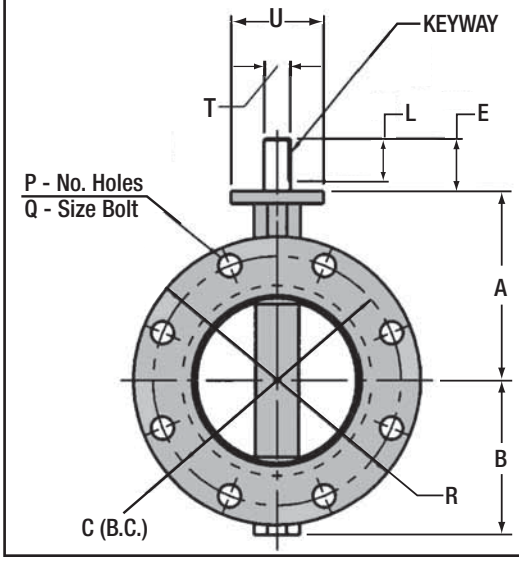

NOTES:

1. Flange dimensions are per ASME/ANSI B16.1, 125 lb. Class.
2. 16" and larger size valves use 4 ea. tapped holes, 2 ea. at the top and 2 ea. at the bottom of flange straddling shaft center line. the depth of the tapped holes are the same as the flange thickness "S" and the threads are per ANSI B16.1. "Q"

ACCESSORIES AVAILABLE

1. 10 Position Lever Actuator
2. Actuators with Hand Wheel or Chain Wheel
3. Extended Bonnets
4. Floor Stands
5. Extension Stems
6. Pneumatic Actuators
7. Hydraulic Actuators (Water Type if Required)
8. Electric Actuators

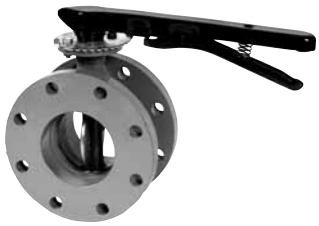

January 2001

GA Industries Inc.

I.O. & M. Manual

3" – 24" Butterfly Valves

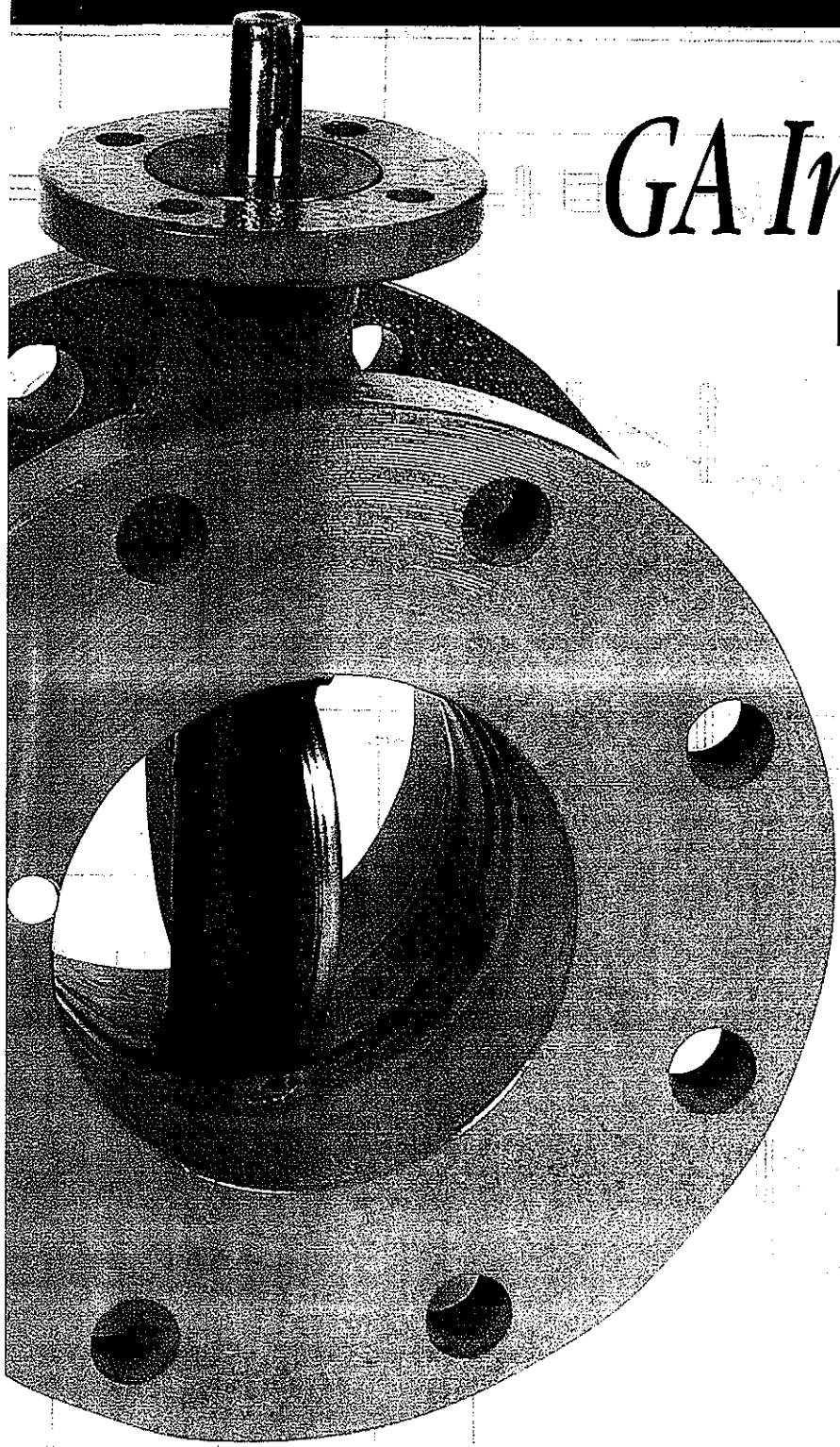

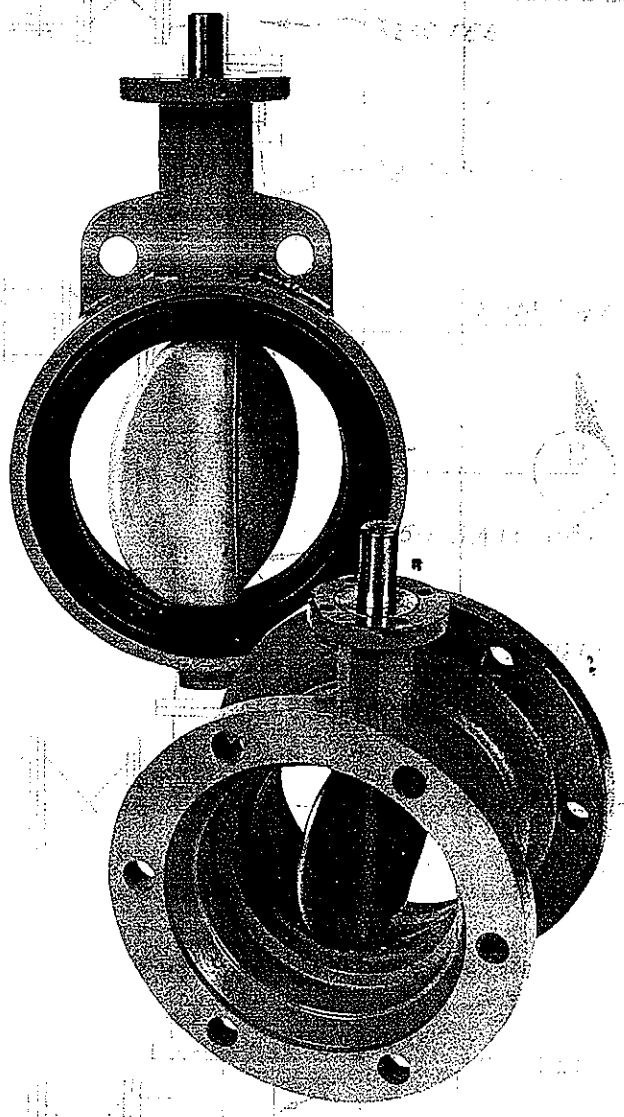

GA Industries Inc.
SINCE 1895
MANUFACTURERS OF
GOLDEN ANDERSON® VALVES

TABLE OF CONTENTS

General ..... pg 2
Receiving ..... pg 2
Installation ..... pg 2-3
MJ Installation ..... pg 3-4
System Test ..... pg 4
Operation ..... pg 4-5
Maintanence ..... pg 5
Warranty ..... pg 5
Trouble Shooting ..... pg 6
Parts ..... pg 7

GA Industries Inc.

MANUFACTURERS OF
GOLDEN ANDERSON VALVES

Installation, Operation and Maintenance of GAI Rubber Seated BUTTERFLY VALVES

GENERAL

The GA Series "BFV150" Butterfly Valve is a resilient seated, quarter-turn valve capable of providing drop-tight isolation, on-off or modulating service for liquid flow control. When installed properly these valves will provide years of maintenance-free service.

Failure due to faulty installation, improper operation or maintenance in such systems could result in damage, down time and costly repairs. In buried underground installations, problems or malfunctions can result in extensive, costly excavation to correct the problem.

RECEIVING AND STORAGE

Inspect valves on receipt for damage during shipment and conformance with quantity and description in the order. Carefully unload all valves to the ground without dropping. On smaller valves, do not lift valves with slings or chain around operating shaft, actuator, or through waterway. Instead, lift smaller valves with eyebolts or rods through flange holes.

Whenever practical, store valves indoors. If not possible, protect valves and actuators from weather and accumulation of water, dirt, and debris. Do not expose rubber seats to sunlight or ozone for any extended period. Valves should be stored with the valve disc or closure member slightly open.

Make sure flange faces and joint sealing surfaces, body seats and disc seats are clean. Check bolts attaching actuator to valve for loosening in transit and handling. If loose, tighten firmly. Operate valve to make sure it opens and closes properly and that stops and/or limit switches are correctly set. Close valve before installing.

INSTALLATION

The following items must be checked during installation to ensure proper function.

1. Carefully place valves into position avoiding contact or impact with other equipment, vault walls or trench walls.
2. Valves are to be installed in accordance with the General Arrangement Drawings furnished for the order.
3. Foreign material in a valve can damage the rubber seat when valves are operated. Be sure valve interiors and adjacent piping are clear of foreign material prior to mating valve to pipe joint.
4. Prepare pipe ends and install valves in accordance with the pipe manufacturer's instructions for the joint used. Do not deflect pipe/valve joint. Do not use valve as jack to pull pipe into alignment

5. In plant piping, install so as to minimize bending of valve connection with pipe loading.
6. In the case of wafer type butterfly valves, concentrically center the valve disc between the mating flanges.
7. Make sure valve disc, when opened, will not contact pipe port. This is especially necessary on pipe with linings and when wafer valves are used. Check manufacturer for minimum pipe I.D. required for clearance.

CAUTION: It is recommended that valves be installed into piping system in accordance with AWWA M-44 in order to prevent any undue piping stress, deflection or bending that may affect the performance of the valve.

CAUTION: On valves without actuators, discs may open or close at any time and cause injury to persons or damage to valve and other property. The shaft/disc clamping device when furnished is intended for temporary use during shipping, handling and valve installation only. Do not subject the valve to flow conditions before actuator is mounted and tested for performance, and clamping device is removed.

Buried valves installed with valve boxes must be so installed that the valve box does not transmit shock or stress to the valve actuator as a result of shifting soil or traffic load.

When valves are installed in vaults, the vault design must provide space for purposes of repair. The valve operating nut should be accessible from the top opening of the vault with a tee wrench.

MECHANICAL JOINT INSTALLATION

The successful operation of the mechanical joint requires that the plain end be centrally located in the bell and that adequate anchorage be provided where abrupt changes in direction and dead ends occur. The rubber gasket will seal more effectively if the surfaces with which it comes in contact are thoroughly cleaned (for example, with a wire brush) just prior to assembly in order to remove all loose rust or foreign material. Lubrication and additional cleaning should be performed by brushing both the gasket and the plain end with soapy water or pipe lubricant just prior to slipping the gasket into the plain end and assembling the joint.

For water and gas service, the recommended range of bolt torques to be applied are given in Figure #1.

When tightening bolts, it is essential that the gland be brought up toward the pipe flange evenly, maintaining approximately the same distance between the gland and the face of the flange at all points around the socket. This may be achieved by partially tightening the bottom bolt first, then the top bolt; next the bolts at either side; and finally, the remaining bolts. This process should be repeated until all bolts are within the range of torques shown in Figure #1. If effective sealing is not attained at the maximum torque indicated, then the joint should be disassembled, thoroughly cleaned, and reassembled. Overstressing of bolts or mechanical joint flanges to compensate for poor installation practice is to be avoided.

Figure #1 – Mechanical Joint-Bolt Torque Loads

Valve Size Inches	Bolt Size Inches	Range of Torque Ft.-Lb.	Length of Wrench* Inches
3	5/8	45-60	8
4-24	3/4	75-90	10
30-36	1	100-120	14
42-48	1-1/4	120-150	16

* The torque loads may be applied with torque-indicating wrenches, which may also be used to check the application of approximate torque loads applied by a person trained to give an average pull on a given length of regular socket wrench.

SYSTEM TESTING

When rubber seated valves are used to isolate sections of line for test, it is important to note that these valves are designed or factory set to hold rated pressure only. Test pressure in excess of factory rating may cause leakage past the rubber seat or damage to the valve.

In order to prevent lost time in searching for leaks, it is recommended that excavations for buried valves not be back-filled until after hydrostatic pressure tests have been made.

Seat leakage can occur due to foreign material in the line. If this occurs, open valve 5-10 degrees to get high velocity flushing action. Close and repeat several times to clear seats for tight shutoff.

Seat leakage can occur due to rotational shift in position of the disc with relation to the body seat. Readjust closing stop.

OPERATION

Do not permit operation of any valve at pressure above the rated pressure of the valve.
Do not exceed 300 ft.-lb. input torque on actuators with wrench nuts, 200 lb. rim pull input torque for handwheels or chainwheels. If portable auxiliary actuators are used, size the actuator or use a torque limiting device to prevent application of torque exceeding 300 ft.-lbs. If an oversize actuator with no means of limiting torque is used, stop the actuator before valve is fully opened or closed against stops and complete the operation manually. Be sure to check actuator directional switch against direction indicated on wrench nut, handwheel or records before applying opening and closing torque.

If a valve is stuck in some intermediate position between open and closed, check first for jamming in the actuator. If nothing is found, the interference is inside the valve. In this case, do not attempt to force the disc open or closed since excessive torque in this position can severely damage internal parts. Contact the GA Service Department.

CAUTION: Fluids exposed to freezing temperatures may cause valve to fail resulting in injury to persons or damage to valves and other property. Do not use valves in applications that are exposed to freezing temperatures unless sufficient flow is maintained through the valve to prevent freezing, or other protection is provided.

MAINTENANCE

Maintenance of rubber-seated valves by owner is generally limited to actuators and shaft seals. Seat adjustment should be made in accordance with field service manuals. Unless the owner has skilled personnel and proper equipment, any major rework will probably require removal of the valve from the line. Depending on condition, valve may require return to the manufacturer.

CAUTION: Removal of actuator from valve shaft can cause disc to rotate, striking persons or objects in the disc path, causing injury to persons or damage to valve. Block or lock disc before removing actuator.

Normal maintenance would be shaft packing replacement and actuator adjustment. Seal leakage, broken parts and difficult operation should be discussed with GA's Service Department before valve repairs are attempted.

Stop line flow and isolate from line pressure prior to performing any corrective maintenance.

After completing repair, cycle valve through one complete operating cycle and after line pressure has been restored, inspect for leakage.

If major repairs require removal or closure of the valve, notify all interested personnel in the water department and fire department that the valve and line are out of service. Upon completion of repair and reinstallation, notify the same personnel of the return of the valve and line to service.

WARRANTY

This GA Industries product is made of the finest available suitable materials and every possible precaution has been taken to assure premium workmanship consistent with established quality control. Valves or parts which are proved faulty due to defective materials or poor workmanship will be replaced free of charge, F.O.B. our plant upon presentation of such proof. This warranty shall not cover the cost of installation and is valid for a period of one year from date of shipment. Specifications are subject to change; certified prints upon request with order.

GA Industries Inc.

MANUFACTURERS OF
GOLDEN ANDERSON® VALVES

Trouble Shooting

PROBLEM	POSSIBLE CAUSE	CORRECTIVE ACTION
1. Leakage at shaft or between valve and actuator.	Packing Loose	Clean packing and valve bore and replace.
	Packing Worn	Replace packing.
2. Valve will not shut off flow or will not fully close.	Obstruction In Line	Open valve to allow fluid flow to flush out obstruction.
	Disc Not Fully Closed	Adjust actuator closed position stop.
	Excessive Line Pressure	Reduce pressure.
3. Valve does not fully open.	Position stop on actuator not set correctly	Adjust actuator open position stop.
	Obstruction In Line	Remove obstruction.
	Excessive Line Pressure	Reduce pressure.
4. Opening and/or closing torque is excessive. Valve is difficult to operate.	Corroded Actuator Parts	Clean & Lubricate Actuator Parts.
	Loose mounting between valve & actuator	Tighten bolts.
	Obstruction In Line	Remove obstruction.
5. Vibration in valve when operating.	Excessive Velocity	Reduce flow rate.
	Loose mounting between valve & actuator	Tighten bolts.

GA Industries Inc.

MANUFACTURERS OF
GOLDEN ANDERSON® VALVES

AWWA
BUTTERFLY VALVES

MATERIALS OF CONSTRUCTION

Parts and Service are available from:

Service Department

GA Industries Inc.

9025 Marshall Road
Cranberry Township, PA 16066-3696
Phone: (724) 776-1020
Fax: (724) 776-1254

NOTE: When ordering parts provide information from valve name plate.

Part No.	Part Name	Standard Material
1	Body	CI-ASTM A126, B
2	Disc (3" - 6") Disc (8" & up)	316 Stainless DI-ASTM-A536, 65-45-12 w/316 Stainless Steel Edge
3	Seat	Nitrile (Buna-N)
4	Upper Shaft	304 Stainless Steel
5	Taper Pin	316 Stainless Steel
6	Lower Shaft	304 Stainless Steel
7	Bearing	Nylon PTFE-W/Fiberglass Back
8	Shaft Seal	Nitrile (Buna-N)
9	O-Ring	Nitrile (Buna-N)
10	Bottom Cover	DI-ASTM-A536, 65-45-12
11	Cover Bolt	Steel, ASTM A-307

PARTS

FLG X FLG BODY

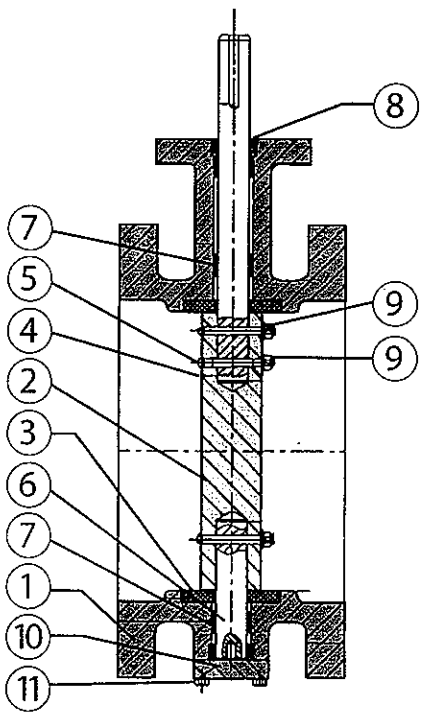

Valves sizes 3"- 8" One Piece Shaft
Valves sizes 10" - 24" Two Piece

WAFER BODY

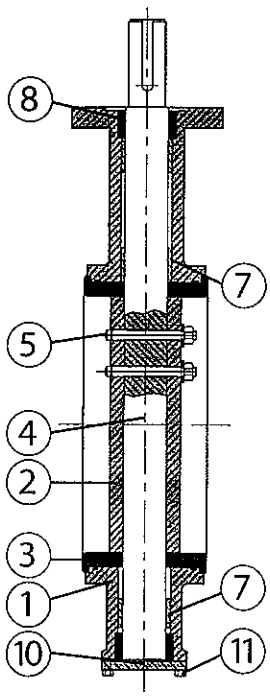

Valves sizes 3"- 8" One Piece Shaft
Valves sizes 10" - 24" Two Piece

MJ X MJ BODY

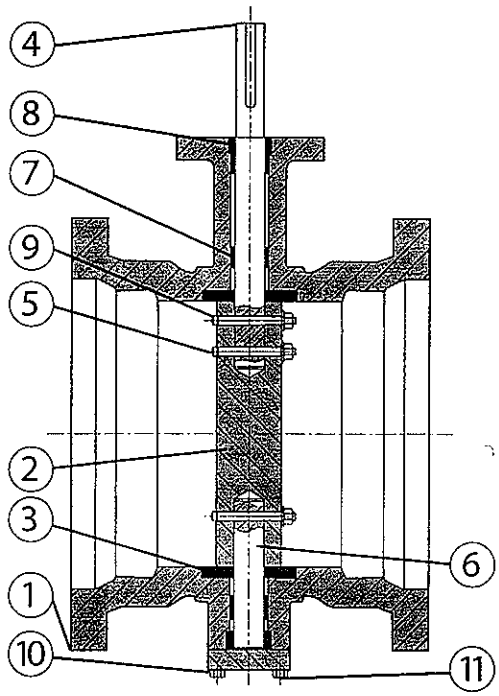

Valves sizes 3"- 8" One Piece Shaft
Valves sizes 10" - 24" Two Piece

GA Industries Inc.

SINCE 1895

MANUFACTURERS OF
GOLDEN ANDERSON® VALVES

AWWA
BUTTERFLY VALVES

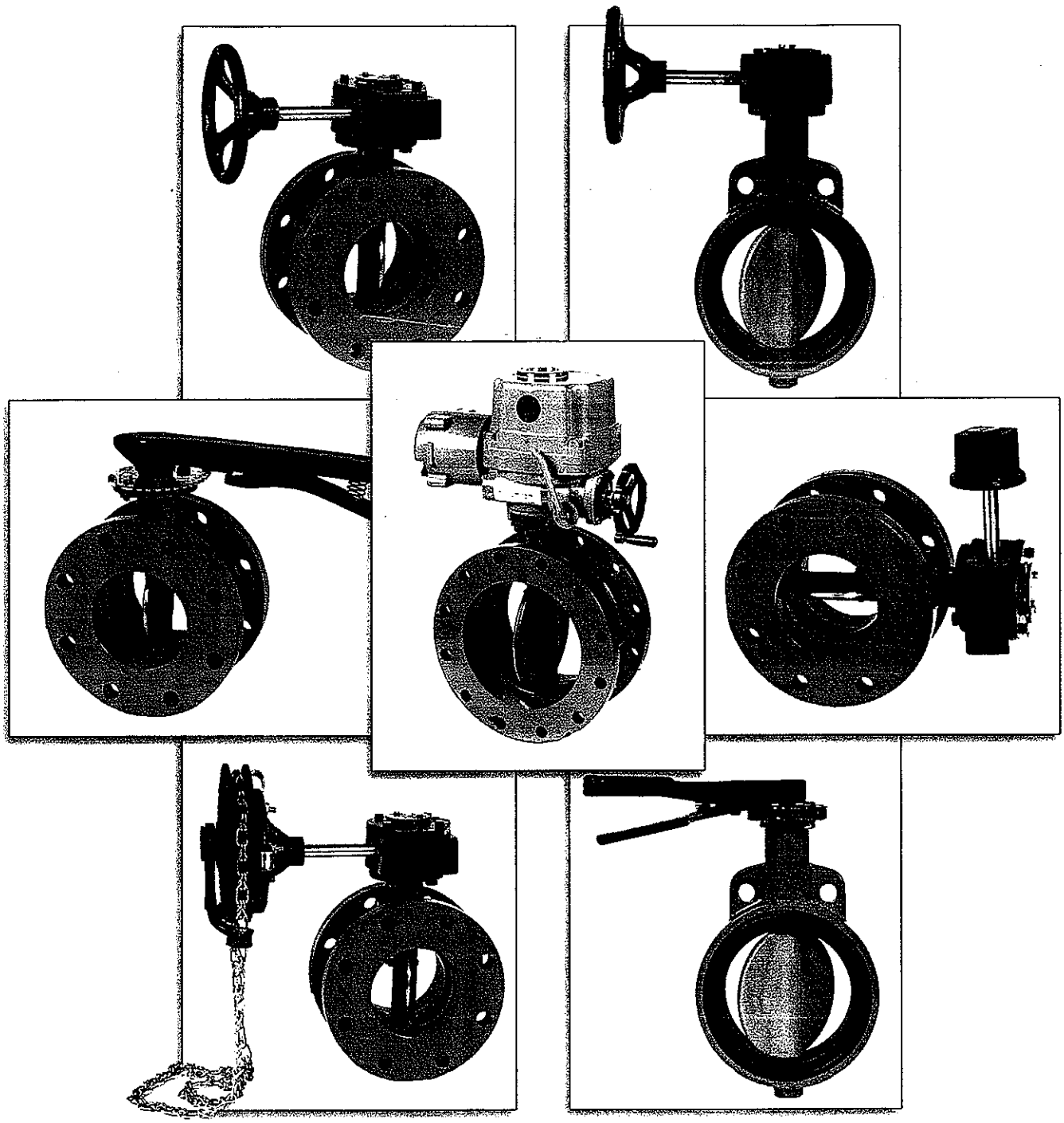

GA Industries Inc.

SINCE 1895

MANUFACTURERS OF
GOLDEN ANDERSON® VALVES

GA Industries Inc.

9025 MARSHALL ROAD • CRANBERRY TOWNSHIP, PA 16066-3696 USA
PHONE: (724) 776-1020 • FAX: (724) 776-1254
WEB SITE: www.gaindustries.com
E-Mail: ga@gaindustries.com

MEMBER
American Water Works Association

MEMBER
Water Environment Federation
Formerly Water Pollution Control Federation

ELECTRIC MOTOR OPERATOR

TABLE OF CONTENTS:

A. DATA SHEETS

B. OPERATION AND MAINTENANCE MANUAL

MANUFACTURER: **EIM**

MODEL #: **MCC1-6**

SUPPLIER

CONTROLS INTERNATIONAL, INC.
CONTACT: RAND UNDERWOOD
10410 VISTA PARK ROAD
DALLAS, TEXAS 75238
(214) 343-9980

SERIES 2000 ELECTRIC ACTUATOR

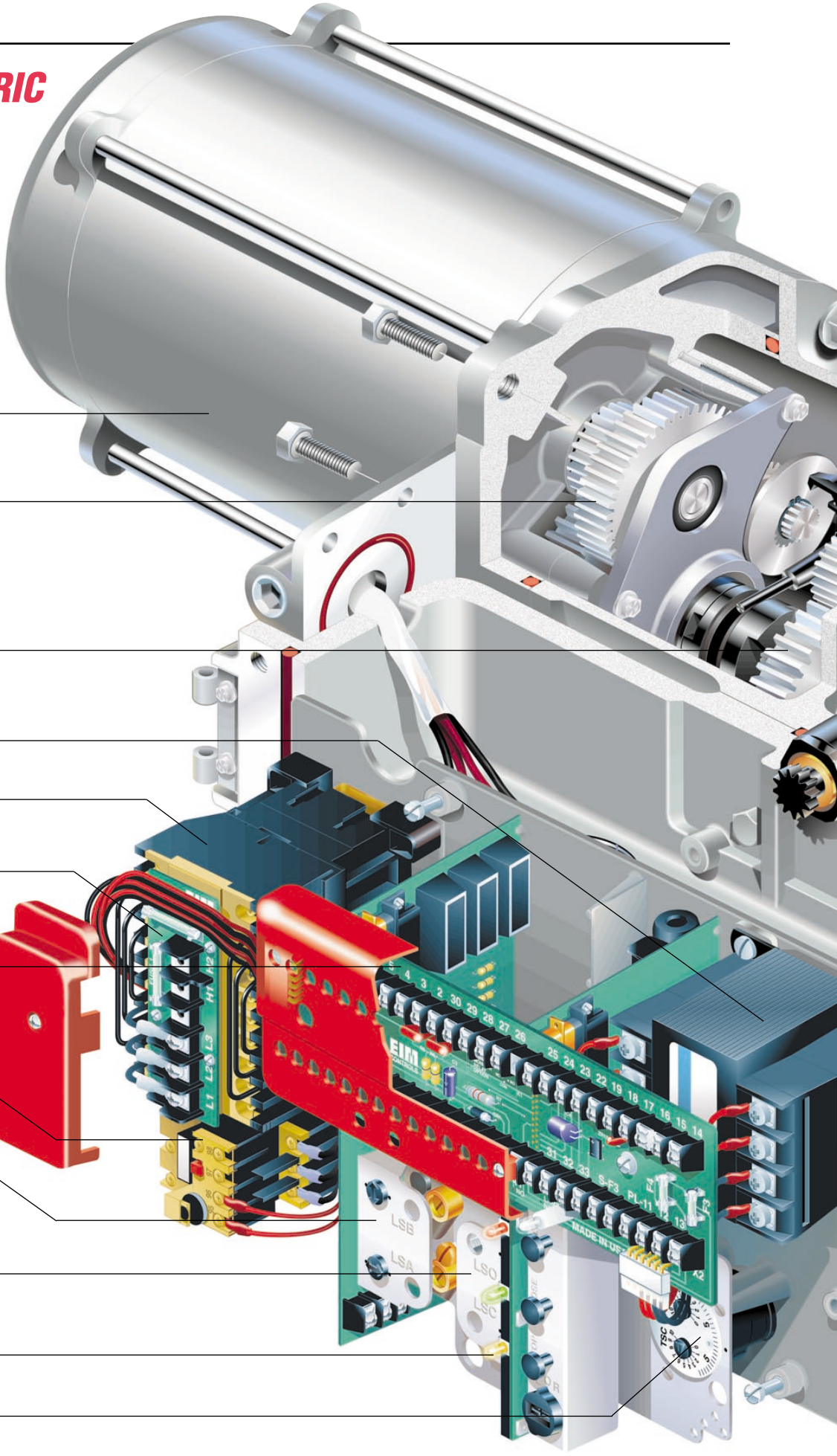

Motor options include most voltages of single phase or three phase alternating current and direct current. Motors are available with built-in thermal protection.

Motor Gear selections allow for speed and torque output combinations.

Handwheel Gearset allows user to limit the rimpull required to operate valve manually regardless of torque required.

Transformer is fully encapsulated and epoxy impregnated.

Reversing Contactor is DIN rail mounted for quick maintenance.

Power Module (PWR) provides transformer primary fuses and terminal strip for motor voltage.

Terminal Board Module (TBM) provides connection points for user wiring and transformer secondary fuses.

Overload Relay senses over-current to provide motor thermal protection.

Intermediate Switch Module (ISM) available in different options including Controlinc, Futronic modulating controls, Interposing relays, and Intermediate limit switches.

Limit Switch Module (LSM) allows combinations of position limit switches, torque switches, push buttons, pilot lights and selector switch.

LED's (light emitting diodes) are used to provide reliable service and long life.

Torque Switch protects the valve and actuator; in both the open and close directions.

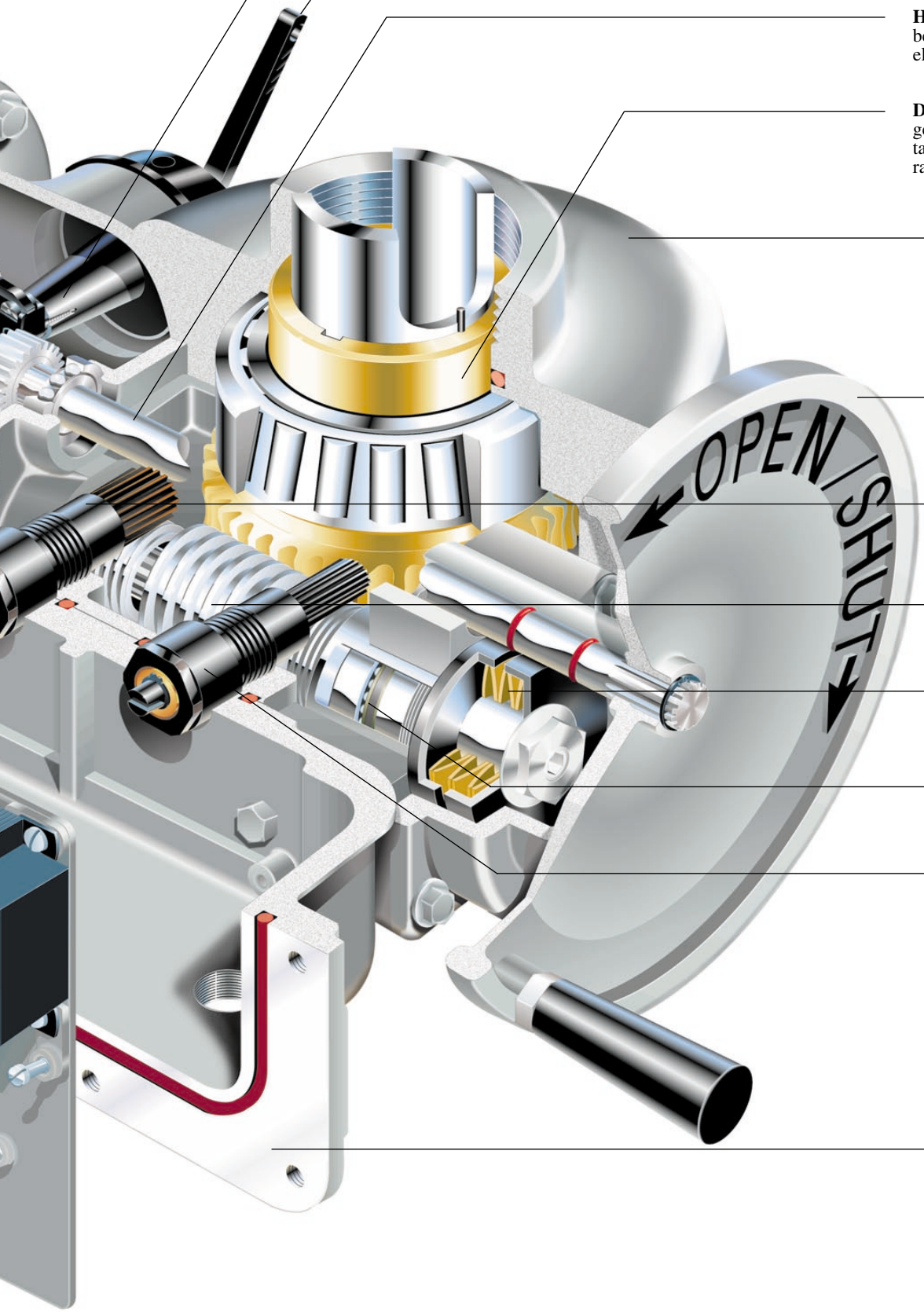

Power Shift Clutch requires minimal force to operate even when valve is tightly seated.

Clutch Handle is padlockable in either hand or motor position to prevent unauthorized use.

Handwheel Shaft is supported by bearings and is splined at both ends to eliminate keys.

Drive Sleeve consists of a bronze worm gear and drive sleeve supported by tapered roller bearings for maximum radial and thrust load support.

Main Housing is high strength ductile iron across the Series 2000 family to provide maximum strength and ductility.

Handwheel for manual valve operation in emergency or power outage.

Geared Limit Drive Assembly remains in-step with valve position at all times.

Worm Shaft is heat-treated alloy steel.

Torque Springs accurately sense torque independent of electronics and regardless of voltage fluctuations.

Roller Bearings support the worm shaft.

Torque Limit Assembly receives rotary mechanical feedback from torque springs directly through main worm shaft.

Electrical Compartment Enclosure features hinged cover, O-ring seals, stainless steel hardware, and multiple conduit entries.

2000 SERIES ELECTRIC ACTUATORS
STANDARD FEATURES DESCRIPTION & OPTIONS

The 2000 Series Electric Actuators from EIM Co. Inc., are available in three (3) Basic Designs;

a. ~~MCP Series - these are "hard-wired" type actuators to meet specific customer requirements~~
b. M2CP Series - based on Modular PC Board construction
c. ~~TEC2000 Series - "Non Intrusive Smart Actuator" Technology~~

The Standard Mechanical Construction for ALL above series utilize the following;

- Ductile Iron Housing Construction
- All 316 stainless steel external hardware
- Class "F" Insulated Motor Windings with (2) Thermal Relays imbedded in the windings (rated 155°C)
  - 15, 30 & 60 minute duty ratings available, +/-10% of nominal voltage (AC motors only)
  - Available power supplies are;
    - ~~208/230/380/440/460/575/660 Volt, 3 Phase, 60 Hz~~
    - ~~220/380/415/400 Volt, 3 Phase, 50 Hz~~
    - 115/208/230 Volt, 1 Phase, 50 & 60 Hz * SPECIFY IF 230/1
    - ~~12/24/48/125 V.D.C. (MCP Only)~~
- Declutchable Manual Over-ride Handwheel, padlockable in manual and motor operation
  - Handwheel Rim Pull at 80 lb maximum, unless otherwise specified
- Travel Limits are "geared" and in always in step with valve stem travel whether in manual or motor operation
- Mechanical "Torque Sensing" - not dependent on electronics (sliding worm & Belleville spring principle)
- Quarter-Turn Actuators include an external graduated position dial indicator, and built-in adjustable end-of-travel mechanical stops (+/- 5°)
- Extensive range of motor gearing & worm gear ratios to meet any required output speed
  - From 2 rpm to 250 rpm.
- Electrical Enclosure Ratings available are;
  - NEMA 4 & 6 (IP65/67) Weatherproof - temporary submergence 6 ft for 24 hours)
  - NEMA 4X (IP66) Weatherproof & Corrosion Resistant
  - IP 68 Submersible - 50 ft for 72 hours - ***M2CP Rating***
  - ~~Type 6P submersible - 50 ft for 7 days - *TEC2000 Rating - F.M. Certified*~~
  - F.M.. (Factory Mutual) Explosionproof
    - Class I, Division 1, Group B (Option) - ***Not MCP***
      Standard for TEC2000
    - Class I, Division 1, Groups C & D
    - Class II/III, Division 1, Groups E,F & G
  - C.S.A.. (Canadian Standards Association Explosionproof
    - ~~Class I, Division 1, Groups B - *TEC2000 Only*~~
    - Class I, Division 1, Groups C & D
  - SIRA (European), EEx d IIB T4 & EEx d IIB 120°C (T4)
    - II 2 GD
    - EEx d IIB T4 @ Ta60°C, IP68
    - EEx d IIB T4 + H2T4 @Ta 60°C, IP68
    - EEx d IIB 120°C(T4) @Ta 60°C, IP68
    - ~~SIRA Certificate Number: Sira 00ATEX1510, dated 29 January 2004 - *TEC2000 Series*~~
      ~~Also covers *Remote Display (RDM) Module*~~
    - SIRA Certificate Number: Sira 03ATEX1510, dated 29 January 2004 - ***2000 Series***
    - SIRA Certificate Number: Sira 02ATEX1147, dated 24 October 2002 - ***Circuit Breaker (CBM) Module***
      Also covers ***Pushbutton (PBM) Modules - 2000 Series***
    - Complies with requirements of EN 50014:1997 (A1 & A2), EN 50018:2000 (A1), EN 5028-1-1:1999
  - Conduit Entrances are;
    - MCP & M2CP Series - (2) 1 1/2" NPT & (4) 3/4" NPT
    - ~~TEC 2000 Series - (1) 1-1/2" NPT & (3) 1" NPT~~
- External grounding lug

2000 SERIES ELECTRIC ACTUATORS
STANDARD FEATURES DESCRIPTION & OPTIONS

The Standard Mechanical Construction for ALL above series utilize the following;

- E.P. (Extreme Pressure) Grease Lubricated Gear Train
  - Standard Grease rated for -20°F to +300°F (-29°C to +150°C)
  - Refer to EIM-025 specification sheet for complete data ——→ INCLUDED
  - ~~Optional Lubricants suitable for -60°F (-50°C) - EIM's "Arctic Package"~~
- TGIC-Polyester Powder Coated.
  - Meets Military Standard MIL-C-24712
  - Refer to EIM-026 specification sheet for complete data ——→ INCLUDED
  - Color, Haze Gray
- Ambient Temperature Rating
  - Standard Ambient temperature rating is -30°F to +150°F (-34°C to +66°C)
  - "~~Arctic" Package temperature rating is -60°F (-50°C~~)

2000 SERIES ELECTRIC ACTUATORS
STANDARD FEATURES DESCRIPTION & OPTIONS

M2CP Series Features;

- Standard Features;

- Control Compartment, Hinged, O-Ring Sealed, with 316 stainless steel screws and hinges
- 2 Train (2 position) Geared limit Switch
  - Close Position, LSC - (3) N.O. & (3) N.C. contacts
  - Open Position, LSO - (3) N.O. & (3) N.O. contacts
  - 10 amps @ 125/230 VAC, 3 amps @ 28 VDVC inductive
- Open & close Torque Switch
  - (1) N.O. contact each direction of travel
  - 10 amps @ 125/230 VAC, 3 amps @ 28 VDVC
- Jumper selectable Features;
  - Torque or Position Seating
  - 10 amps @ 125/230 VAC, 3 amps @ 28 VDVC inductive
- TBM (Terminal Board) Module
  - 48 point Control Terminal Board with transient voltage snubber circuit
    - (2) Secondary Transformer Fuses
    - Power-On LED Indicating Light (internal)
- Power Terminal Strip, isolated from Control Power TBM

Note: Non-Integral requirements for Single Phase and Direct Current D.C. applications requires use of MCP Design

- Optional Extras;

- **Integral Design** (Open/Close control)
  - (3) Pushbuttons, (2) LED Lights, 3-Position Selector Switch
  - Reversing Contactor, Mechanicaly & Electrical Interlocked, 25 Amp Rated
    - Starter rated for 1200 starts per hour
    - Starter equipped with Isolation Power Terminal & (2) Primary Fuses
  - 75 VA Epoxy Encapsulated and Impregnated Control Transformer
  - Options for Local Controls
    - Up to (3) Pushbuttons
    - Up to (4) LED Indicating Lights
    - (3) Position Selector Switch
  - Options for Intermediate Limit Switch Contacts - (2) N.O. & (2) N.C. (rated as above)
- **Futronic II** (Positioning Control, +/- 3% at minimum of 45 second operating time)
  - ***3 Phase or 1 Phase Power Supply***
    - 3 Phase Motors rated 1200 starts per hour
    - 1 Phase Motors rated 100 Starts per hour
  - Includes above Integral Controls, including (3) Pushbuttons, (2) LED Lights, and 3-Position Selector Switch (Manual-Off-Auto)
  - Band, Span and Zero Adjustments
  - 4-20mA Input Signal & Output Transmitter (Optically Isolated)
    4mA = closed
    20mA = open
  - 1000 Ohm Position Feedback Potentiometer (internal use only)
  - Intermediate Limit Switch Contacts - (2) N.O. & (2) N.C.
  - Loss of Command Signal Option:
    - Remain In Last Position
    - Go to Preset Position

FOR REFERENCE ONLY - DRAWING NOT TO SCALE

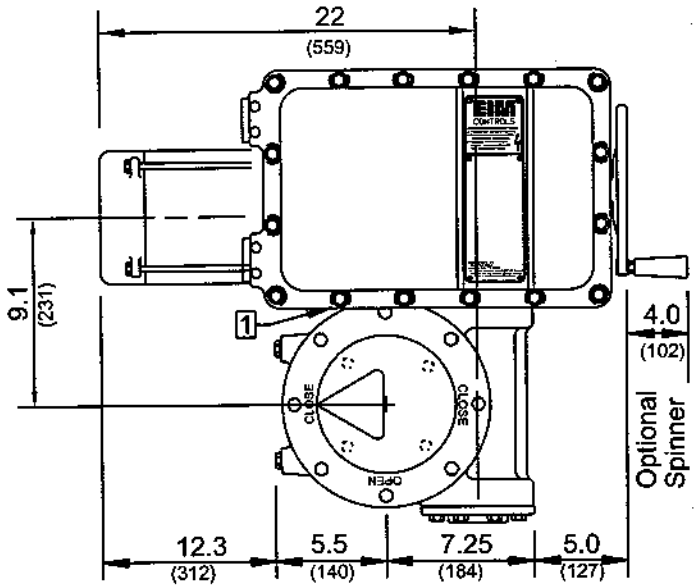

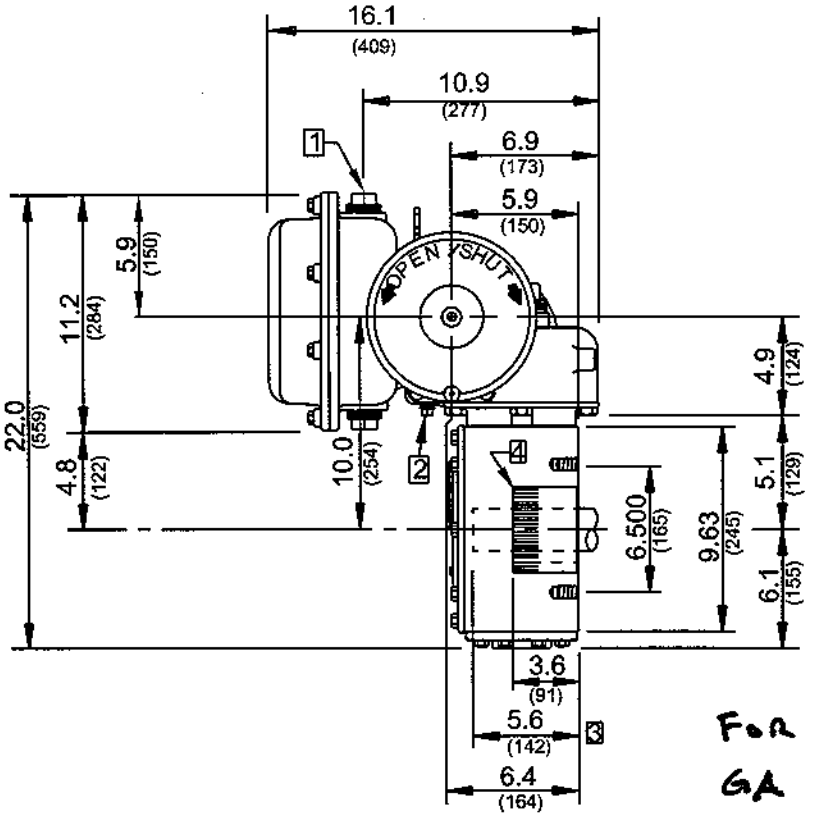

For 24"
GA AWWA BFV

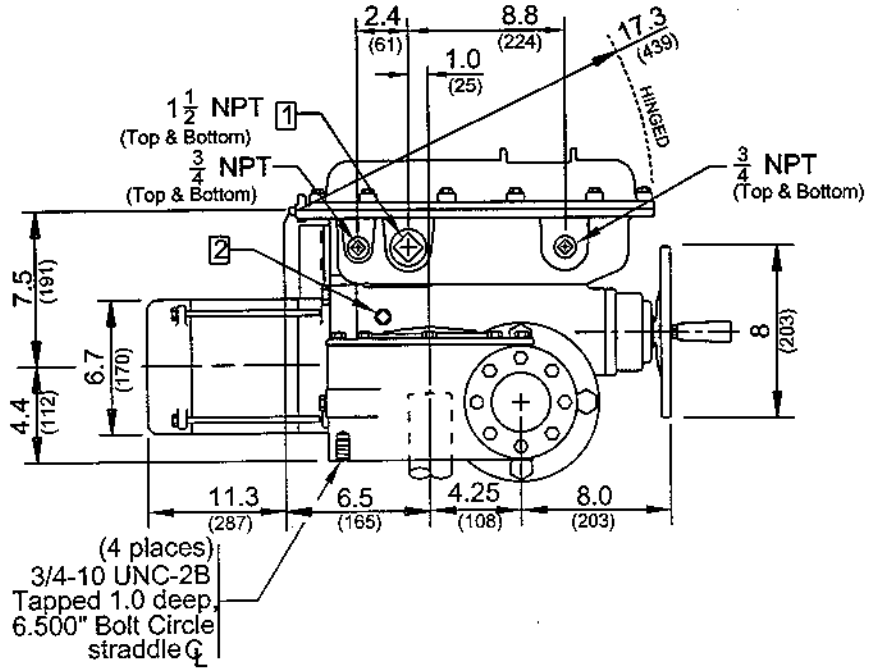

1. 1½ NPT is preferred wire entry top or bottom.
2. Lubrication ½ -14 NPT plug.
3. Maximum valve stem length into actuator.
4. Spline Bush: Removable from the bottom of actuator. Refer to EIM Job Spec Sheet for Bushing furnished for specific application.

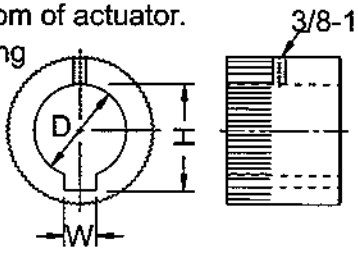

INCHES (MILLIMETERS) .XXX ± .005" .XX ± .020" .X APPROX.

EIM COMPANY, INC.
13840 PIKE ROAD
CONTROLS MISSOURI CITY, TX 77489

REV	DATE	ERO	BY
A	6/15/95	9587	/CML

TITLE: M / MG02 1/4 T 6.50"

OUTLINE NO. M-2001/16G REV A

1. [1] 1.50-11 NPT (2 Plcs) is preferred wire entry. CAUTION Conduit must enter at lowest point to prevent water from entering electrical enclosure due to condensation. If hazardous (classified) or Nema 6 location, conduit seal required at electrical enclosure entrances.
2. [2] Lubrication $\frac{1}{2}$-14 NPT plugs.
3. [3] P/N 34706 Bushing. Maximum bore stem size is 2.00" (1/2 Sq Key)
4. For electrical control pilot device elements mounted on actuator control cover, see EIM job spec sheet & wiring diagram furnished for each specific job no.

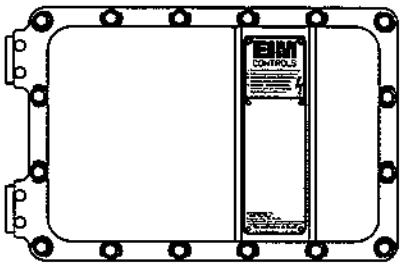

5. WARNING - The installation and servicing instructions are for use by qualified personnel only. To avoid injury and electric shock, do not perform any service on EIM equipment unless qualified.
6. Installation shall be in accordance with current edition of National Electrical Code.

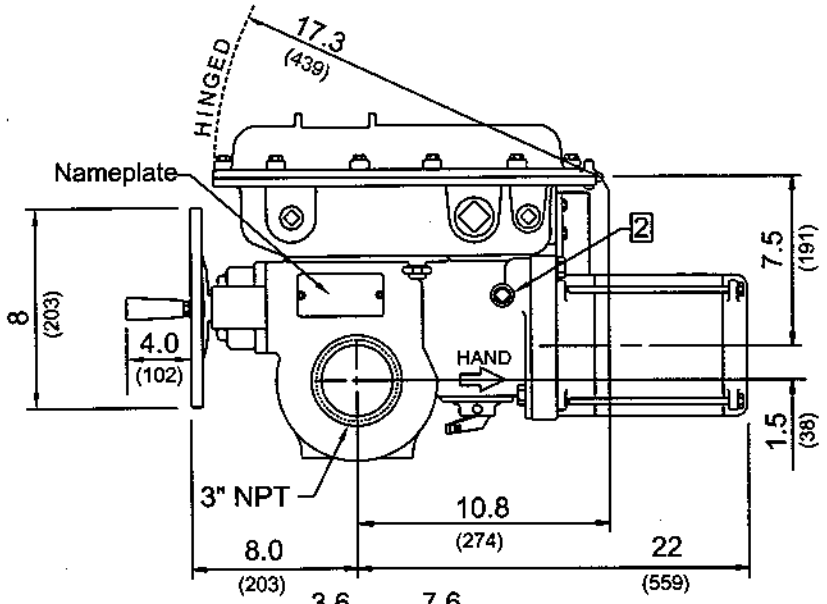

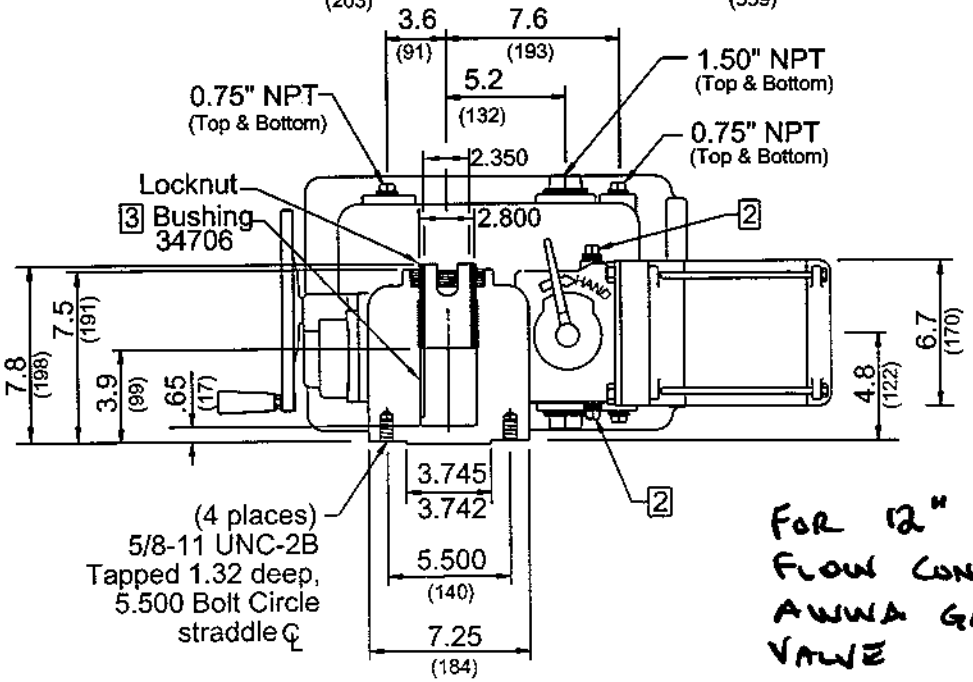

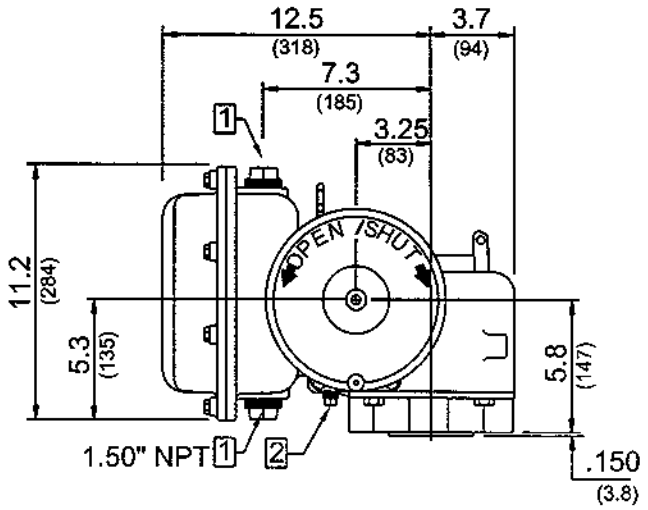

FOR 12" AMERICAN FLOW CONTROL AWWA GATE VALVE

INCHES (MILLIMETERS) .XXX ± .005" .XX ± .020" .X APPROX.

EIM COMPANY, INC.
13840 PIKE ROAD
CONTROLS MISSOURI CITY, TX 77489

TITLE: Type U M/T 5.50

OUTLINE NO. U-0001/14G REV C

REV	DATE	ERO	BY
C	3/7/01	13561	LHE/c

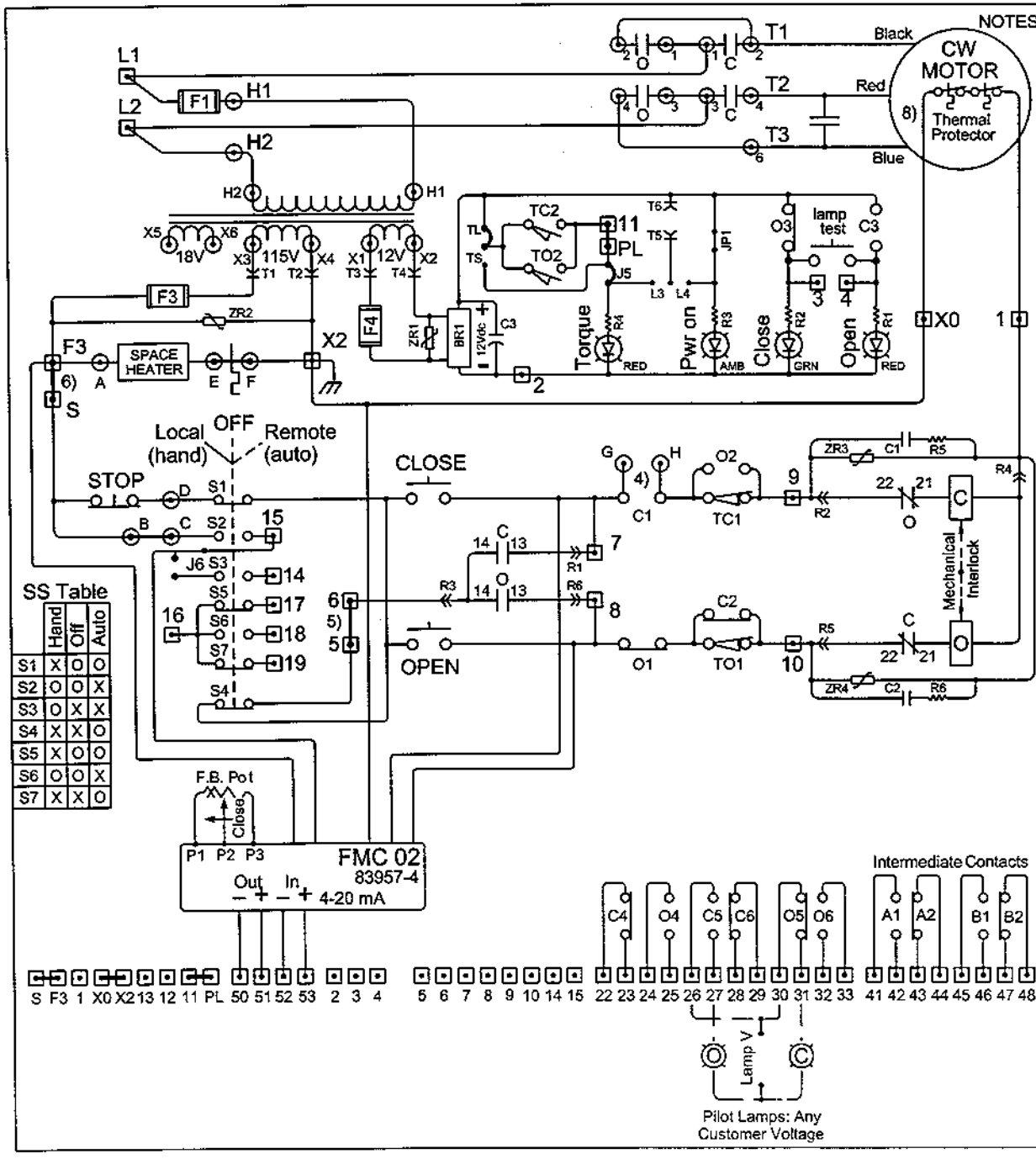

NOTES:
1) Contacts shown: **Valve Closed**, Voltage: **Off**, S/S :**Hand**
2) ⊡ Customer wires to terminals on PWR and TBM modules
⊙ M2CP Internal terminal interconnect wiring points.
– – – – Field Connected Wiring by **OTHERS** .
3) Torque switch TC1 & TO1 NC contacts open, and TC2 & TO2 contacts make on field adjustable mechanical overload in (C) Close, or (O) in Open direction.
4) For Torque seated valve: Install G to H strap on LSM.
5) For maintained PB control: remove 5 to 6 strap on TBM.
6) For remote stop PB or relay: remove F3 to S strap on TBM
7) O & C (22-21) Reversing contactor NC interlock contacts.
O & C (14-13) Momentary pushbutton NO seal-in contacts.
8) Motor thermal contacts open with excessive temperature.
9) Position Indicator Pilot Lights: LED solid-state
OPEN indicates: Full Open (RED)
CLOSE indicates: Full Closed (GREEN)
Mid-Position : Both OPEN and CLOSE illuminated.
Pwr ON and Torque Indicators are only visible with cover open for convenience during maintenance procedures .

TYPICAL FOR BOTH VALVES – MODULATING

SS Table

	Hand	Off	Auto
S1	X	O	O
S2	O	O	X
S3	O	X	X
S4	X	X	O
S5	X	O	O
S6	O	O	X
S7	X	X	O

		Valve Position			Contact Function
		Close	MID	Open	
CLOSE rotor	C1	O	X	X	Close coil
	C2	X	O	O	Bypass TO1
	C3	O	X	X	Open lamp
	C4	X	O	O	
	C5	O	X	X	
	C6	X	O	O	
OPEN rotor	O1	X	X	O	Open coil
	O2	O	O	X	Bypass TC1
	O3	X	X	O	Close lamp
	O4	O	O	X	
	O5	X	X	O	
	O6	O	O	X	
A	A1	O	X		Spare
	A2	X	O		Spare
B	B1	O	X		Spare
	B2	X	O		Spare

LSM	TBM	RCT	MTR	FMC			
01	01	02	04	02			

EIM COMPANY, INC.
13840 PIKE ROAD
CONTROLS MISSOURI CITY, TEXAS

DWN BY SB ORIGINAL DATE 6-19-98

WIRING DIAGRAM M2CP-400

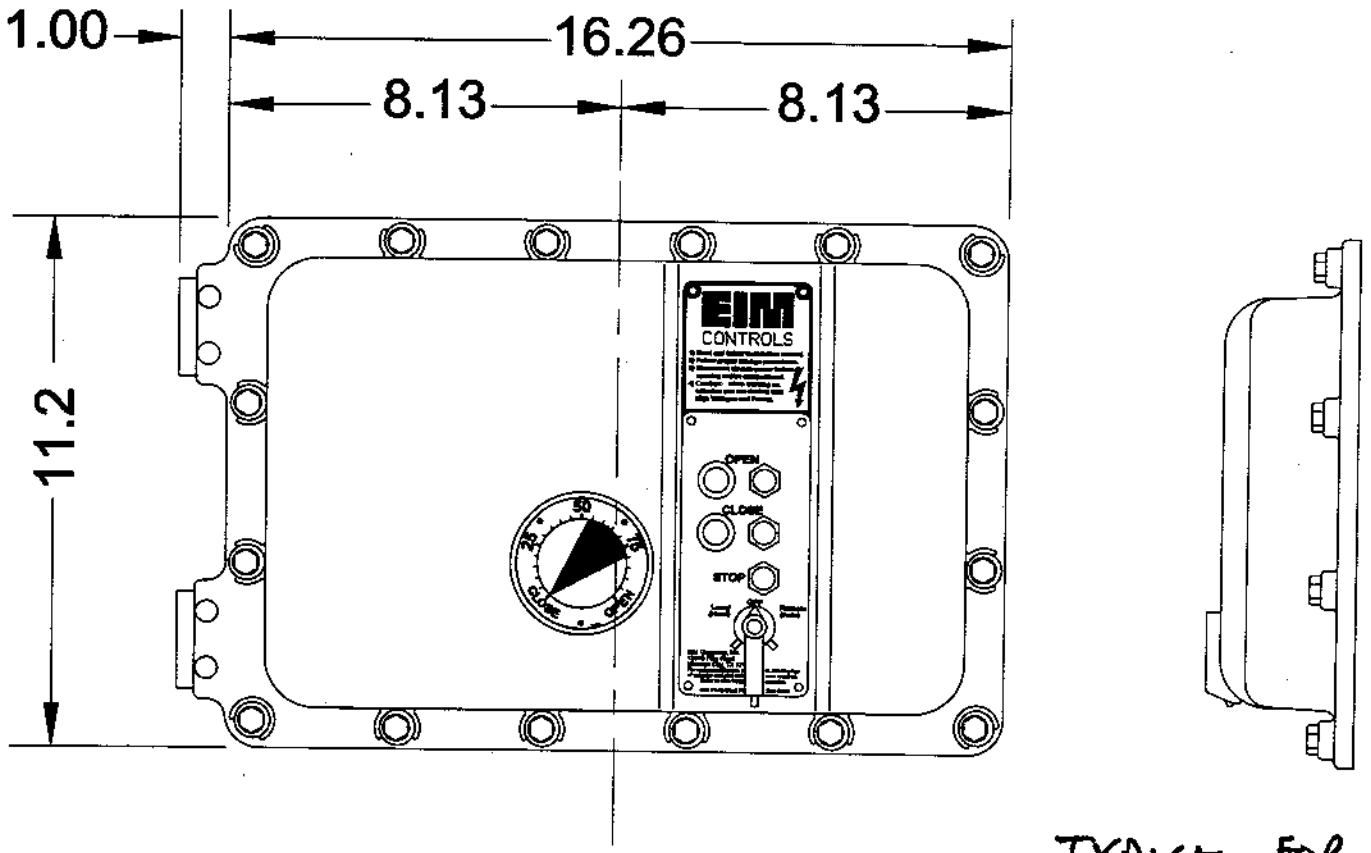

TYPICAL FOR BOTH VALVES

INCHES (MILLIMETERS) .XXX ± .005" .XX ± .020" .X APPROX.

EIM COMPANY, INC.
13840 PIKE ROAD
CONTROLS MISSOURI CITY, TX 77489

TITLE: M2CP 3B, 2L, SS & MDPI CVR

REV	DATE	ECO	BY
A	2/26/04	13664	/CML

OUTLINE NO. 72534 REV Δ

Factory Mutual Research

1151 Boston-Providence Turnpike
P.O. Box 9102 Norwood, MA 02062 USA
T: 781 762 4300 F: 781 762 9375 www.fmglobal.com

CERTIFICATE OF COMPLIANCE

HAZARDOUS (CLASSIFIED) LOCATION ELECTRICAL EQUIPMENT

This certificate is issued for the following equipment:

Series 2000 Valve Actuators (MCP and M2CP designs). Model abcd-ef.

a = Model Type
- (1, 2, 3, 4, 5, 6, 7, 8 and 9) Multi-Turn with torque and thrust.
- (E or H) Multi-Turn side mount on bevel gear.
- (F or G) Multi-turn torque only.
- (P, Q and R) Quarter turn-top mount.
- (D, S, U or A) Multi-turn (no thrust).
- (J, K, L or V) 2 Turn top mount.
- (M or W) Quarter turn-side mount on 1/4T gear box.
- (B) Multi-turn with ball screw output.
- (C) Multi-turn with ball screw temperature compensated.
- (T) Multi-turn with temperature compensation.
- (N) Navy actuators DOD-V-24657 (SH).

b = Motor horsepower A, B, C, D, E, F, G, H, J, K, L, M, N, P, Q, R, S, T, U, V, W, 1-9 and X, Y, Z.
c = Motor gear ratio A, B, C, D, E, F, G, H, J, K, L, M, N, P, Q, R, S, T, U, V, W, X, Y and Z.
d = Valve adaption code to describe max Acme and Stem Size, max Shaft Size, Bolt Circle, Screw Size, Qty Screw, Worm Ratio and Hand of Gearing.
e = Motor voltage or pneumatic pressure 1,2,3,4,5,6,7,8,9,B,C,D,E,F,G,H,J,K,L,M,N,P or T (65-150 psi).
f = Additional features F,C,H,P,M,E,D,SCM,PBM,CBM (CBM for Groups C,D,E,F,G) or none.

Special Condition of Use:
**T4 temperature code rating when valve actuator motors are protected with 130ºC rated thermal cutouts, and T4A temperature code rating when valve actuator motors are protected with 115ºC rated thermal cutouts.*

CBM and PBM Modules.

Equipment Ratings:

Suitable for Class I, Division 1, Groups B, C and D; Class II, Division 1, Groups E, F and G; and Class III, Division 1 hazardous (classified) locations (MCP Valve Actuators and CBM Module do not include Group B rating).

Approved for:

EIM Company, Inc.
Missouri City, TX 77489

An FM Global Affiliate

This certifies that the equipment described has been found to comply with the following Factory Mutual Research Approval Standards and other documents:

FM 3600	1998
FM 3615	1989
FM 3810	1989
(with Supplement 1)	1995
ANSI/NEMA	1991

Original Approval Job Identification: 1G2A3.AE Approval Granted: December 20, 1982

Subsequent Revision Reports / Date Approval Amended

0T9H0.AE	August 10, 1992
2Y4A4.AE	March 5, 1997
3011622	July 13, 2001

Factory Mutual Research Corporation

Robert L. Martell Jr.
Assistant Vice President
Approvals Division

7-13-01
Date

An FM Global Affiliate

LUBRICANTS

Through extensive testing under the most severe load and temperature conditions, EIM has standardized on special formulated lubricant compounds for our range of Electric and Pneumatic Actuators and Manual Worm & Bevel Gear Operators.

Grade #221 Moly Ultra 800 E.P.

All 2000 Series Actuators, except Models 3000, EB, E, & G are factory lubricated with this special compound.
For actuator output speeds up to and including 96 RPM.
Additionally, all WO & WB Series Worm Gear Operators utilize this lubricant.

It is a multi-purpose extreme pressure grease specially formulated for use in actuators under adverse conditions of excessive pressure, heat, cold, moisture, and both high speed and low speed operation. It is compounded from select high viscosity index solvent refined severely hydrofinished 100% pure paraffin base oils. Blended into the base oils is an aluminum complex base thickener and selected additives including molybdenum disulfide. This formulation provides:

- Resistance from water washout.
- Shear and mechanical ability
- Anti-wear and extreme pressure load carrying properties and excellent reversibility.
- Rust and oxidation inhibiting characteristics
- The molybdenum acts as a back-stop due to it's natural affinity to adhere to metal surfaces. It reduces friction, resulting in reduced wear and reduction in gear contact operating temperatures.
- ***The EIM rated operating lubricant temperature range is -20°F to +175°F (-29°C to +80°C)***

GREASE PROPERTIES	
Color	Black
Thickener	Aluminum Complex
ASTM Dropping Point	500°F / 260°C
Pumping Temperature	-40°F / -40°C
Texture	Smooth
Tmken E.P. Test (ASTM D-2509)	60 lbs

BASE OIL PROPERTIES	
Viscosity @ 100°F	615 SUS
Viscosity Index	96
Flash Point	500°F / 260°C
Pour Point	-40°F / -40°C

~~**Grade #200SUG Special Multi-Lube - Note: Actuators are tagged with "Green Label"**~~

All 2000 Series Actuators with output speeds above 96 RPM, including 3000. Also for E,G,W Models

It is a semi-synthetic, heavy duty extreme pressure, non-solvent containing lubricant compounded from a blend of select solvent refined severely hydrofinished high viscosity index paraffin base oils and polyaphaolefin synthetic base oils. A combination of molybdenum and solid lubricants are compounded to improve the anti-wear, extreme pressure characteristics and load carrying capabilities.

- ***The EIM rated operating temperature range is -30°F to +175°F (-34°C to +80°C)***

Special Note: This lubricant is recommended as an additive to the previously furnished "Red Bentone" grease or any other grease such as Texaco multi-gear EP, etc.

Cartridge Tubes are available from EIM, Part No. 36931, Price $10.00 each.

GREASE PROPERTIES	
Color	Black/Silver Flecks
Pumping Temperature	-50°F / -45°C
Texture	Fluid / 27% Solid
Tmken E.P. Test (ASTM D-2509)	60 lbs

BASE OIL PROPERTIES	
Viscosity @ 100°F	559 SUS
Viscosity Index	96
Flash Point	425°F / 218°C

Grade #197 Moly Pure Synthetic Lube - Note: Actuators are tagged with "Red Tag"

All 2000 Series Actuators, all speeds, specifically for **"Low Temperature"** applications

It is a multi-purpose, extreme pressure, specially formulated for use in low temperature actuator applications. It is compounded from the highest quality polyalphaolefin (PAO) synthethic base oils available. Blended into this is a bentone basde thickener and selective additives.

- ***The EIM rated operating temperature range is -60°F to +105°F (-50°C to +40°C)***

Note: For these low temperature applications, called "Artic Packages", the EIM motors are also furnished with sealed bearings using Dow Corning® 33 Extreme Low Temperature bearing grease. Motors aslo include line voltage motor heaters

COATING / PAINT SYSTEM

EIM utilizes a Thermosetting Powder Coating on all Electric & Pneumatic Actuators and certain size Worm Gear Actuators. It is type TGIC-POLYESTER, Color Haze Gray. All exterior and interior surfaces are coated including the inside of the electrical compartment.

The system meets Military Specification MIL-C-24712 and has received approval from NAVSEA SIMA, San Diego. It is also approved by the Underwriters Laboratory and is listed as UL 1332.

All "Bare Metal Flamepath" surfaces be spray coated with "CRC Industrial Di-Electric Grease" to avoid surface corrosion. This should be done each time these surfaces are exposed to the atmosphere.
Spray cans can be obtained from: CRC Industries, Inc., Warminster , PA 18974, Tel: (800)- 521-3168, Part No. 03082

Surface Preparation

- Each external component is shotblasted to a commercial finish (SSPC-SP6) to remove oxidation, light surface oils, and to provide a light profile for increased adhesion.
- The components are pre-heated with SOLUCOAT 5039 at 2.5 to 3.0% at 150°F for 2 minutes. This crystalline conversion coating (iron/phosphate) increases paint adhesion and prevents underpaint corrosion.
- Each component is then rinsed to remove any chemical residue and emulsified grease and oil.
- The components are again heated and sealed with SOLUCOAT 5038 at 150°F. This sealed iron/phosphate coating provides the corrosion resistance required.
- Each part is then hot air dried at 400°F until all parts are dry.

TEST METHODS	COATING PROPERTIES	
ASTM D523-89	Gloss at 60°	50-60
HOI TM 10.219	PCI Powder Smoothness	7
ASTM D2454-91	Overbake Resistance, Time	100%
ASTM D3363-92a	Pencil Hardness	H-2H
ASTM D2794-93	Direct Impact; Gardner	20 in/lbs
ASTM D3359-59, B	Adhesion, Cross Hatch	5B Pass
ASTM D522-93a	Flexibility, Mandrel	3/8 in. dia., no fracture
ASTM B117-95	Salt Spray	1,000 hours
	Film Thickness	2.5 - 3.5 Mils

For Model Sizes EB-03 & 04, and large Worm Gear Operators, (MG05 to 08 & WO/WB 64 & larger), and Bevel Gear Operators the following is used:
Ameron Amerlock 400 Epoxy Coating

Finish	Semi-Gloss
Color	Pearl Gray
Components	2
Volume Solids	83%
Film Thickness	5 to 8 mils
Coats	1

Material Safety Data Sheet (MSDS)

EIM maintains complete MSDS Sheets on the above paints. If copies are required, contact the "Safety Manager".

Coating Over Powder Coated Parts

There are two recommended methods for applying a paint coat over the powder coating.

1. A strong solvent such as acetone or M.E.K. (methyl-ethyl-ketone) can be used ***with care***. Wipe the surface quickly and allow time for the solvents to flash off before apllying coating. Also use a flowing rinse with virgin solvent after the initial solventis through the top coat.
   Caution: thses solvents are somewhat expensive and very flammable!

2. Sanding or other means of abrasion can be used but insure the abrasive media is completely removed prior to coating.

Manual E796

2000 M2CP

When communicating with EIM for replacement parts or for technical questions, we MUST have actuator nameplate information, including Job, Serial, and Model numbers. This allows us to check EIM records of your actuator.

When ordering parts, specify repair part by EIM part number and description from drawings furnished with actuator.

EIM Parts Department Fax (281) 261-3834

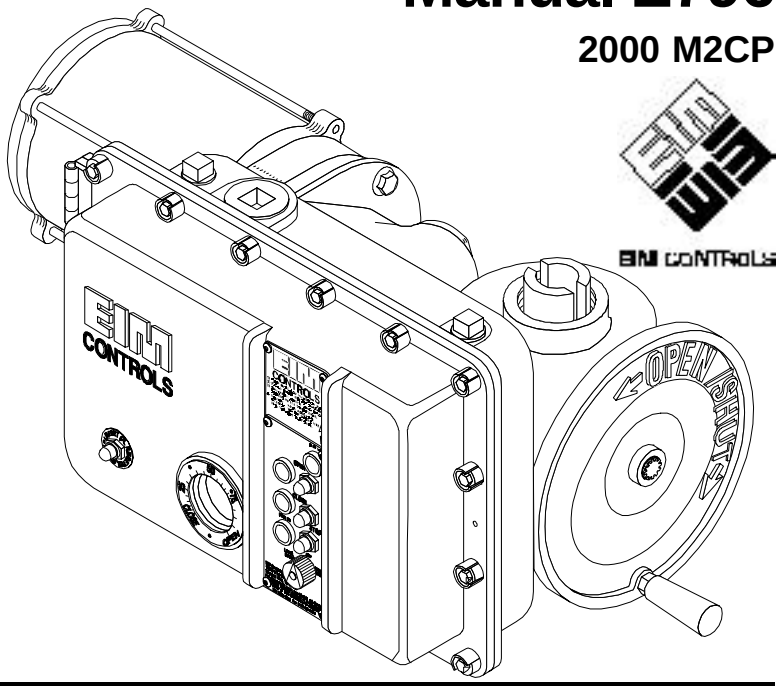

TABLE OF CONTENTS **Page**

Storage Instructions 2
M2CP Electrical Hook Up 2
Assembly to Valves 3
Limit Switch Setting Instructions 4
Torque Switch Setting Instructions 5
MDPI & Potentiometer Gear Box 5
Futronic II 83957 Calibration 6
Trouble Shooting & Wiring Diagram Symbols 7

DO

1. **DO follow proper storage procedures.** Improper storage will void warranty.
2. ***DANGER*: DO check for proper motor rotation.** If valve goes wrong direction when button is pushed, you have no torque or limit protection. 3-Phase incoming power voltage must have 2 wires reversed.
3. **DO read and follow procedures** before attempting to energize actuator.
4. **DO cut off electric power before opening switch compartment.**
5. **DO install relief vent in highest point of gearbox.**
6. **DO use valve stem covers** of sufficient length.
7. **DO clean electrical enclosure flange** thoroughly & lightly grease before closing.
8. **DO secure electrical enclosure bolts** (10-12 ft-lbs).
9. **DO follow an annual maintenance procedure.**
10. **DO use caution** when working on, with, or around valves and actuators. You can be dealing with high pressures, forces, voltages and flammable media.

DON'T

1. **Don't Start-up** without reading this manual.
2. **Don't stack actuators.**
3. **Don't store actuator on the ground unprotected.**
4. **Don't lift the unit** by clutch lever or handwheel.
5. **Don't lift a valve assembly** by electrical actuator.
6. **Don't operate electrically without first** checking proper phase rotation, torque and position limit switch adjustments (follow instructions on pgs 2, 4 and 5).
7. **Don't plug actuator motor** by starting and stopping repeatedly to move a too stiff valve. Check for cause.
8. **Don't jumper torque switches** except as recommended by Wiring Diagram or Valve Manufacturer.
9. **Don't use oversize thermal motor overloads** to eliminate tripping problem. Find cause and correct.
10. **Don't use a cheater** to force the handwheel. You can damage gearing and shafts. Find cause and correct.
11. **Don't torque seat valve,** sluice gate or damper unless the valve manufacturer recommends.

LUBRICATION

EIM Actuators are factory filled with a high quality lubricant carefully selected to insure actuator performance under specified operating conditions. Refer to EIM JOB SPEC SHEET to identify the lubricant provided. Normal operation *may not* require lubricant replacement.

MAINTENANCE

At least once a year a check should be made of your EIM actuator.

a) Disconnect ***all*** electrical power to actuator.

b) Open electrical enclosure. Inspect & tighten all electrical connections.

c) Visually inspect for any electrical or mechanical damage. Replace worn or damaged components.

d) Check lubrication consistency and level. Fill or replace if required.

PRESSURE RELIEF

During operation of electric actuator, the gear temperature increase in combination with variations of outdoor temperature will cause a small pressure build-up within actuator gear box. EIM furnishes Pressure Relief Vent Fitting Part No. 83385. Placement on Actuator can be determined only after field location and position of valve has been determined. Select the highest 1/2 NPT vent location on actuator gear box; remove 1/2 NPT plug and replace with 83385. The possible locations of vent are shown on EIM Outline Drawing.

SHORT TERM STORAGE

(Stored at Job Site less than one year from shipment)

1. Actuator should be stored with motor shaft in horizontal position and electrical enclosure in either the horizontal or vertical position.
2. Actuator should be stored indoors free from job site dirt, mud, moisture and temperature changes.
3. If indoor storage is not possible, the actuator must be stored off the ground above possible water or snow level. Remove M2CP and store with other electrical and electronic equipment in protected warehouse. If M2CP is not removed, Space heater MUST be energized to protect electrical controls.
4. EIM supplies NPT plugs in each conduit entry. Do not remove until electrical hook-up. The customer conduit should be routed to enter electrical enclosure at 1-1/2 (1.50) NPT located at lowest point, so condensation does not drain into enclosure and damage parts.
5. Cover units loosely with a plastic sheet. This serves as partial protection from rain.

LONG TERM STORAGE

(Stored more than one year from shipment)

1. Store indoors or M2CP should be removed and stored in a protected area. Follow procedures of short term storage.

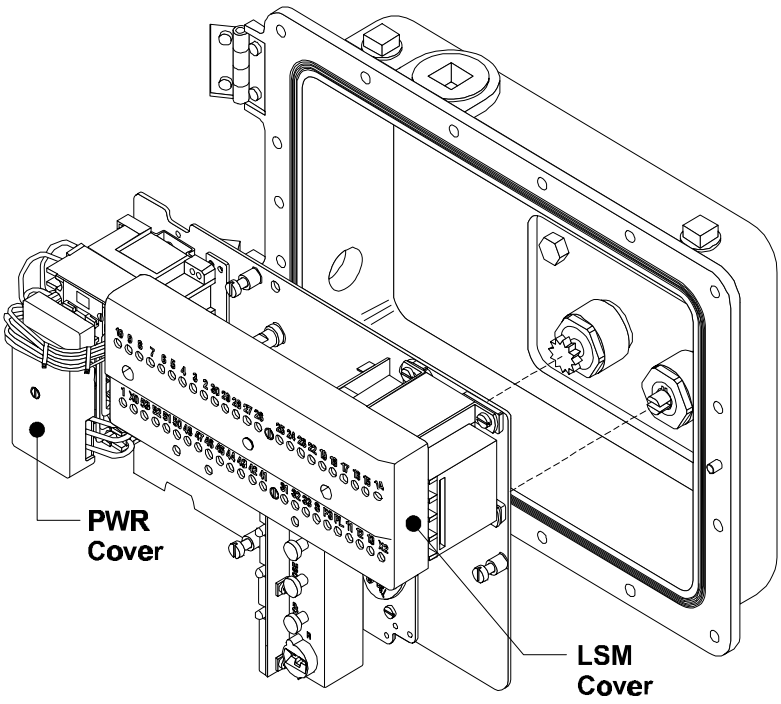

FAILURE TO STORE ACTUATOR PROPERLY WILL VOID WARRANTY OF ELECTRICAL & ELECTRONIC COMPONENTS

M2CP ELECTRICAL HOOK-UP Remove PWR and TBM covers to expose terminals for customer wiring.

EIM Modular Modular Control Package (M2CP) is available configured in many combinations of electrical and electronic parts. Refer to **WIRING DIAGRAM** and **EIM JOB SPEC SHEET** for components provided by EIM. Connect control wires to TBM and Power (motor) Voltage to PWR terminals. If optional M2CP mounted circuit breaker was specified, connect power voltage leads to circuit breaker. EIM terminal blocks are furnished with wire binding screw connectors with rising captive plates, allowing field connection by several methods: 1) strip and connect bare wire, 2) strip and install wire ferrule, 3) strip and install crimp-on insulated or non-insulated ring tongue or similar terminal. Circuit Breaker accepts 1) bare wire strip, or 2) wire ferrule.

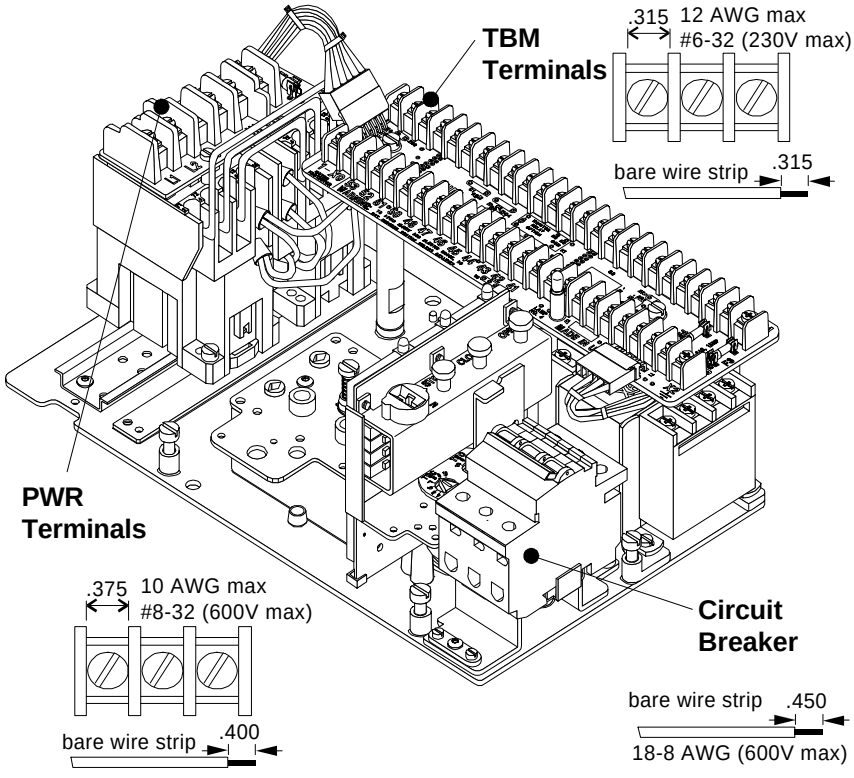

Electrical Hook-up

STEP 1. Move valve to mid-position by handwheel. This will allow sufficient time to stop actuator in case of improper hook-up or reversed incoming power voltage phases.

STEP 2. Identify a means of removing power from actuator during check out. Be sure no erroneous remote control signal can be received causing actuator to energize.

STEP 3. Energize Open control to check operation of contactor and pushbuttons. Open controls must move valve in Open direction. If valve Closes, actuator must be stopped and any (2) two power voltage leads reversed to correct voltage phasing.

CAUTION: If voltage is improperly phased, Torque and Position Limit Switches are not in circuit to protect valve.

STEP 4. Seal all field conduit entries in accordance with National Electric Code.

ASSEMBLY TO VALVES - Threaded Valve Stem

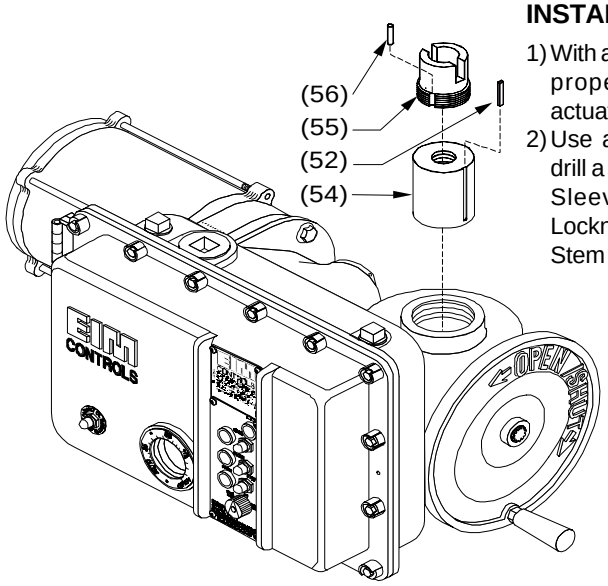

LOCKNUT LOCKPIN INSTALLATION

1) With actuator in place on valve, ensure proper flange mating and valve actuator orientation.
2) Use a number 30 (.1285) drill bit to drill a hole 3/4 inch deep into the Drive Sleeve assembly threads for the Locknut Lockpin (56) using groove in Stem Nut Locknut as drill guide.
3) Install Locknut Lockpin (56) into drilled hole to prevent Stem Nut Locknut from working loose and turning.

Note: When installing, the Locknut Lockpin - it should extend 1/4 inch above the Drive Sleeve assembly to allow for future removal.

STEM NUT INSTALLATION (MULTI-TURN)

1) Unscrew Locknut (55) holding Bronze Stem Nut (54) and remove the Stem Nut and Key (52).
2) Lubricate Stem and run Stem Nut down Stem to check acme thread fit, then remove Stem Nut and set aside.
3) Lower actuator over Stem onto valve flange. The screws thru valve flange into actuator must engage a minimum of one full screw diameter deep into bottom base and be tightened to a preload. See assembly drawing for screw size and torque to tighten properly.

MOUNTING SCREWS

If EIM supplied adaptation, the mounting screws are included. If adaptation to valve was the responsibility of others, the mounting screws *are not* furnished by EIM. Screws thru adapter MUST engage a minimum of one screw diameter deep into EIM actuator base.

4) Screw Stem Nut on Stem until it enters Drive Sleeve. Line (52) Key and (54) Drive Sleeve keyway and insert (52) Key.
5) Turn handwheel in Open direction, pulling Stem Nut into Drive Sleeve until it bottoms out (valve will begin to open).

CAUTION: LOCKNUT MUST BE TIGHT AGAINST STEM NUT.

6) Lower Locknut (55) over Valve Stem and screw into place firmly against top of Stem Nut. Tap Locknut ears using brass drift until tight.

THRUST SPOOL (Model 4000 & 5000)

1) Locate Thrust Mounting bolts.
2) Remove eight mounting bolts and separate Spool from actuator.
3) Position Spool over Valve Stem. Thread Spool onto Valve Stem until it meets valve plate.
4) Bolt and secure Spool onto valve.
5) Position actuator above Spool. Lower actuator onto Spool while manually rotating the unit until ears on Stem Nut and ears on main Drive Sleeve mesh.
6) Grease flange face before securing unit to Spool.
7) Re-install thrust plate mounting bolts. Tighten to proper torque.

NOTE: Reverse procedure if Stem Nut needs to be replaced. Actuator does not need to be returned to factory for this procedure.

(Quarter-Turn) SPLINE BUSHING

EIM removable Spline Bushing allows easy adaptation to valve shaft diameter and Key. Actuator may be rotated with respect to valve shaft for unexpected or awkward field installations.

1) Move valve to full Open or Close.
2) Place Spline Bushing on valve shaft with Key and tighten set screw.
3) Using handwheel on actuator, move gear position indicator arrow to full Open or Close (the position in Step 1)
4) Position actuator so Spline Bore is correctly aligned with the Spline Bushing on stem shaft.
5) Move actuator onto shaft until flange faces properly mate. Secure with screws thru the adapter flange into base of actuator.

Quarter-Turn Valve

STOP SETTING PROCEDURE

Built-in mechanical stops are provided to prevent handwheel operation beyond total valve travel (90 ± 6°). End of travel stops are independently adjusted, locked in place and sealed.

Type P, Q & R
(top mount)

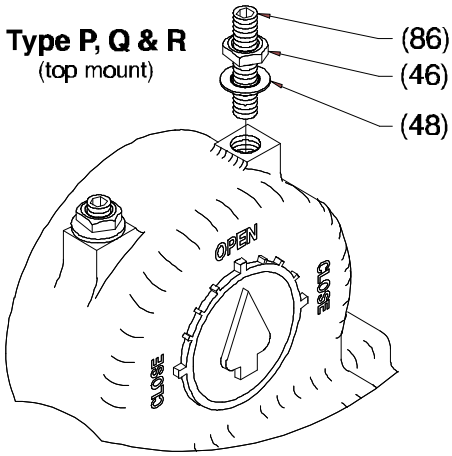

Loosen both Locknuts (46) and back out two Stopbolts (86) to allow valve to close and open fully. Insure Electrical Travel Limit Switches have been adjusted (see pg. 4).

1) Run actuator electrically to full Close.
2) Screw Close (86) Stopbolt in until it seats, then back off 1/2 turn. Install (48) Washer and tighten (46) Locknut.
3) Run actuator electrically to full Open.
4) Screw Open (86) Stopbolt in until it seats, then back off 1/2 turn. Install (48) Washer and tighten (46) Locknut.

Type M/MG
(side mount)

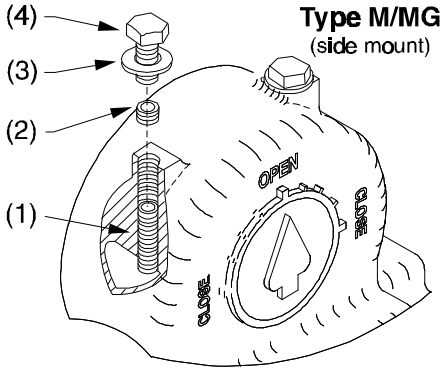

Back out two Stopbolts (1) to allow valve to close and open fully. Set Travel Limit Switches (see pg. 4).

1) Run actuator electrically to full Close.
2) Screw Close (1) Stopbolt in until it seats, then back off 1/2 turn. Tighten (2) Lockscrew.
3) Run actuator electrically to full Open.
4) Screw Open (1) Stopbolt in until it seats; back off 1/2 turn. Tighten Locknut.
5) Install (3) & (4) Seal Washer & Screw.

CAUTION: Do not set actuator position Limit Switches to drive into mechanical stops. Damage can occur if unit is repeatedly stalled into end stops.

LIMIT SWITCH SETTING INSTRUCTIONS

BEFORE MAKING LIMIT SWITCH SETTING:

1. Move valve to mid-position (use handwheel).
2. Phase the power (motor) voltage and make sure that open contactor moves valve Open and close contactor moves valve Closed.

DANGER: Improper power voltage phasing eliminates protection of both position limit switch and torque switches, risking valve damage.

TO SET OPEN LIMIT SWITCH (LSO)

1. **Open valve** during handwheel operation note rotation direction of screwdriver (fig. 1) in LSO Adjusting Shaft. After valve is fully Open, Close it three handwheel turns to allow for coasting when motor is actuated.
2. **Disengage spring loaded gear:** Push Disengage Shaft in (fig. 2a) down, then rotate 90° so shaft is captured down. This will disengage limit switch gears from spring loaded drive gear.

TIP: many turns may be required to set limit switches; it may be convenient to use a reversible variable speed drill to rotate the adjusting shafts instead of a screwdriver.

3. **Line up LSO indicator:** If switch rotor arrow does not line with round holes (within ± 15°) on plate as shown in fig. 3a, rotate screwdriver in same direction noted in Step 1 until switch just rotates. If arrows line up as shown in fig. 3b, rotate screwdriver in the opposite direction until switch just rotates.
4. **Re-engage** the spring-loaded drive gear by rotating disengage shaft in fig. 2a. Spring loaded disengage shaft will rise.
5. **IMPORTANT: to insure limit switch gears have re-engaged properly with spring loaded drive gear, firmly *"jiggle"* (rotate) all adjusting shafts with screwdriver back and forth. Proper engagement has been made if all shafts (LSC, LSO, LSA & LSB) will not turn with screwdriver.**

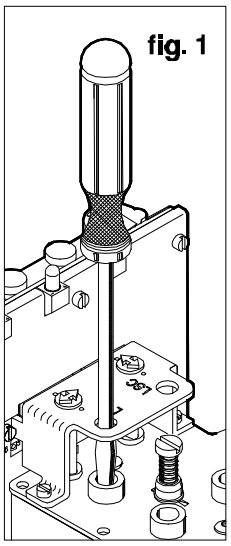

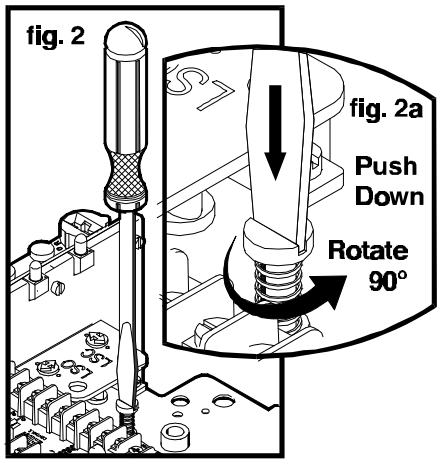

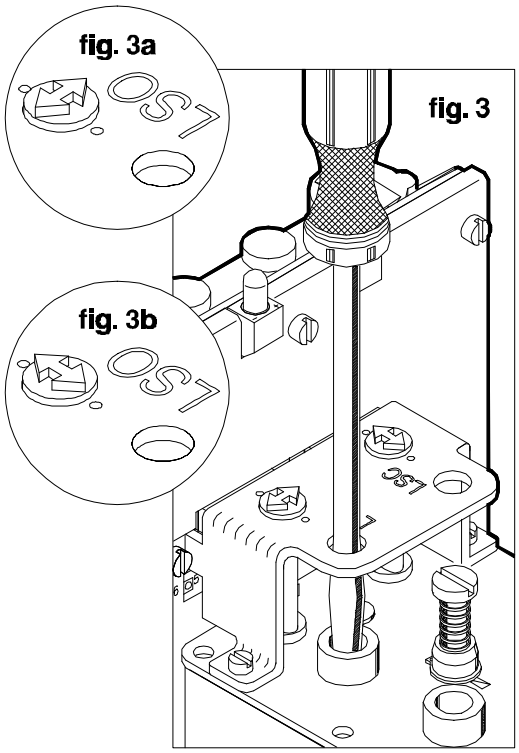

SET (LSC) CLOSE LIMIT SWITCH

1. **Close valve**, using handwheel. During handwheel operation note rotation direction of screwdriver in LSC adjusting shaft. After valve is fully Closed, Open it three handwheel turns to allow for coast.
2. Repeat steps 2 through 5 of LSO setting instructions with screwdriver in LSC cavity.

Important: *"jiggle"* adjusting shafts.

TO SET INTERMEDIATE SWITCH (LSA OR LSB), if included.

1. Open Valve to desired position, then repeat steps 2 thru 5 of LSO.

Important: *"jiggle"* adjusting shafts.

TORQUE SEATED VALVES

If valve is a torque seated valve, and the geared limit contacts are used for indication only, the LSC switch should be set several handwheel turns ahead of torque switch contact action. This gives proper valve position Lamp indication in spite of minor position variations which might occur due to torque seating.

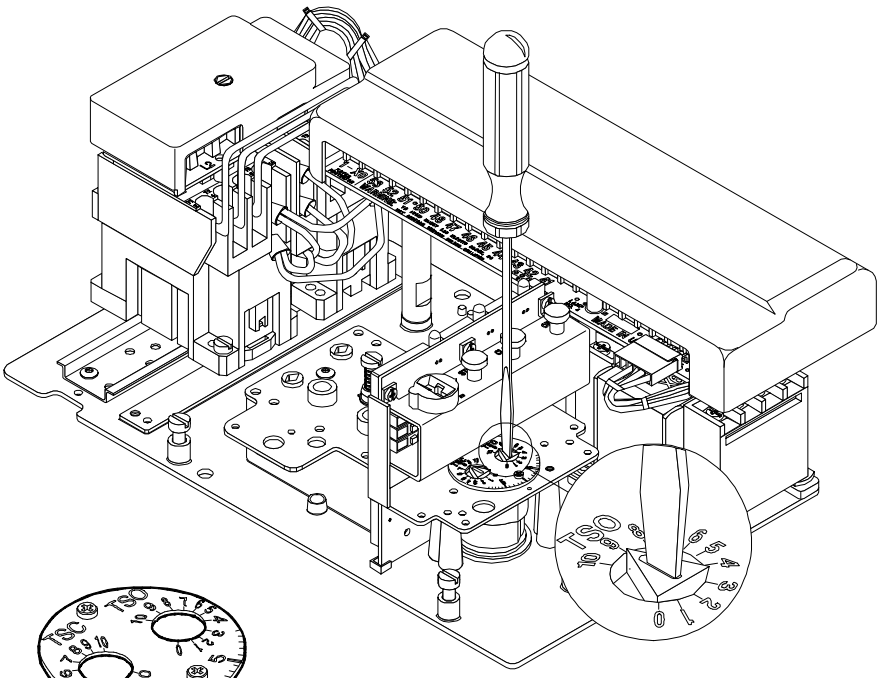

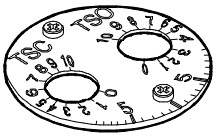

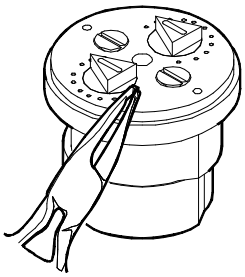

Torque Switch Rotation Limit

Adjustment rotation may be limited, Remove dial to expose anti-rotation pins. Remove pins from position 10 and insert into the desired hole.

TORQUE SWITCH CALIBRATION
To set Close Torque Switch (TSC)

a) Close valve using handwheel. Set valve to the desired torque. Observe rotating dial for number that corresponds to desired Close Torque.

b) Insert screwdriver in TSC slot. Press down to disengage and turn arrow to setting determined in a). Release at this point and it will re-engage and remain set.

c) Back the valve away from Close position and reseat by handwheel to verify torque trip point is at desired setting. The trip point of switch is a distinctive click as it breaks contact.

d) **DANGER:**

REVERSE POWER VOLTAGE PHAS ING REMOVES TORQUE SWITCH PROTECTION FROM THE REVERSING CONTACTOR COIL CIRCUITS. VALVE DAMAGE COULD OCCUR. If phasing has not been checked, do so before proceeding. Back valve away from Close position with handwheel and test torque electrically, using Close controls. Readjust as required.

To Set Open Torque Switch (TSO)

a) Follow procedure as for TSC at TSO dial.

Multi-turn Actuators

Multi-turn top-mounted and side-mount bevel gear actuators require use of Gear Reduction Assembly part no. 84055-0000 for Mechanical Dial Position Indication MDPI *and* 1-turn Pot. N-number replaces -0000 to complete part no. For 1-turn Pot only *without* Dial Indication part no. is 84117-0000. Refer to EIM JOB SPEC SHEET for MDPI furnished.

MDPI *Mechanical Dial Position Indication* is a gear reduction assembly to convert multi-turn valve stem nut turns to 270 degrees (.75 turn) for viewing position indication arrow thru glass window on actuator electric switch compartment cover. Point of rotation reference has been designated as **N-number**. N is the total number of electric actuator 12-tooth gear limit spring-load pinion rotations for full valve stroke.

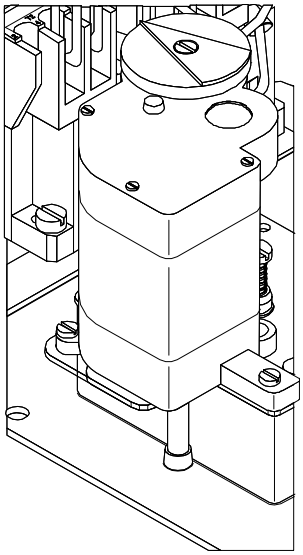

Calibration

MDPI & POT Drive is calibrated after LSC and LSO are properly set (Pg. 4). Move valve to Close position. Manually rotate MDPI arrow to indicate Close. Calibration is now complete. Open valve to check that MDPI arrow goes to Open, indicating that N is correct for full valve travel. Potentiometer, if included, has been calibrated. Mechanical dial travel is 270°. Approximately 5% of total Pot resistance is left on each end for total valve travel.

Quarter-Turn Model P, Q, R & M

Top-mount P, Q and R and several models of M/MG's side-mount do not require MDPI gear reduction assembly for 1-turn Pot. If multi-turn Pot is required, EIM JOB SPEC SHEET will list 84131-0000 or the correct assembly. Spec Sheet will list,(1) Pot clutch gear, (2) Pot input gear and (3) potentiometer.

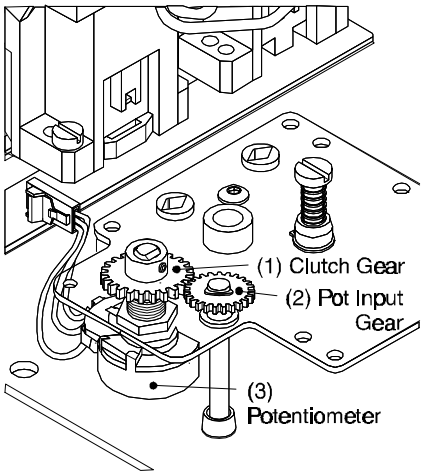

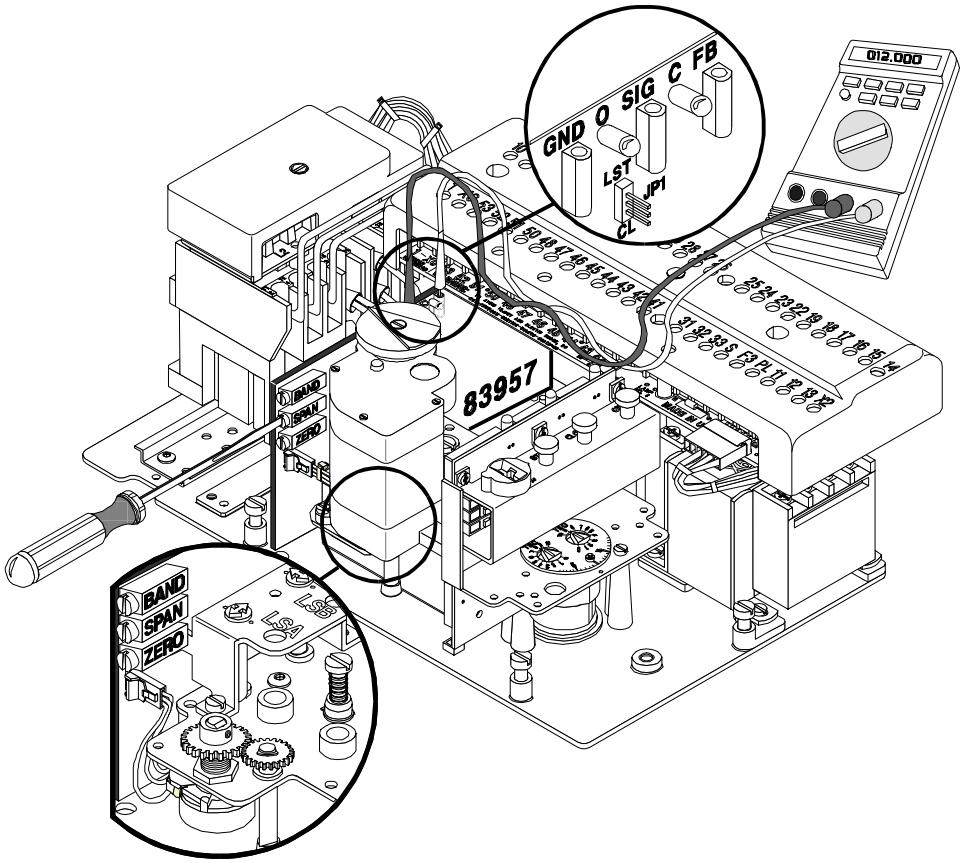

Futronic II 83957

83957-1 (600 starts per hour maximum) or 83957-2 (100 starts per hour) module controls valve by comparing two inputs (the desired position from process controller or computer and actual valve feedback position). If the two are within BAND, valve will not move. When the setpoint moves outside the BAND, valve moves in the direction to make control signal and valve feedback position inputs balance.

Calibration

After field wiring is complete, position limit switches have been set (Pg 4) and Pot adjustment on (Pg 5); proceed.

1. Voltmeter probes (+) in *Red* **(FB)** test point and (-) in *Black* **(GND)** test point.
2. Close valve: Meter should read **1 volt DC.** If it does not adjust **ZERO.**
3. Open valve: Meter should read **5 volts DC.** If it does not adjust **SPAN.**
4. Repeat steps 2 and 3 until no re-adjustment is necessary.
5. After a command signal has been connected, adjust **BAND** so valve moves to desired setpoint. **Delay:** 83957-1 has a six (6)* second fixed delay preventing actuator from instantaneously responding to another signal. This allows reversing contactor to respond at 600 starts per hour maximum.

Note: Jumper **JP1** is factory set: See Job Spec Sheet for **JPI** position. Loss of 4-20 mA control signal will cause valve to (1) **LST** (last position will not move) or 2) **CL** valve will close. **JPI** jumper plug may be field changed.

TIP: To measure **BAND**, place Voltmeter (-) Probe in ***Green*** (SIG) test point and (+) probe in ***Red*** (FB) test point. Move valve using Handwheel. Observe reading when valve repositions. (**BAND** adjustment is ±1% to 7%.)

***** 83957-2 has a thirty (30) second delay for 100 starts per hour maximum.

Note 1) Feedback Pot may be mounted on MDPI (Multi-turn valves) or mounted on gear cover (1/4 Turn valves).

M2CP WIRING DIAGRAM SYMBOLS

Refer to EIM JOB SPEC SHEET and EIM WIRING DIAGRAM for components furnished.

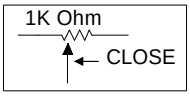

POTENTIOMETER
Potentiometer slider is geared to Valve Position and "in-step" at all times

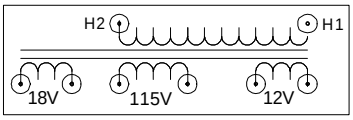

TRANSFORMER
Outputs: 120, 12 and 18Vac

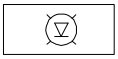

PILOT LAMPS - LED INDICATORS
Actuated by position limit switches

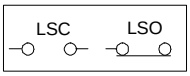

POSITION LIMIT SWITCH
LSC shows open. LSO shown made.

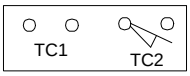

TORQUE LIMIT SWITCHES
N.C. Double Break Contacts Open when overload occurs. N.O. contacts make.

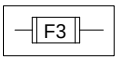

FUSE

PUSHBUTTONS N.C.
Momentary N.C. Contact

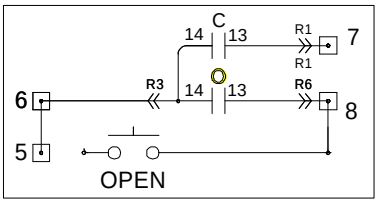

PUSHBUTTONS N.O.
Momentary N.O. contacts connects control voltage to reversing contactor coils. Seal-in contacts C and O (14,13) on contactor allow travel without continued holding down of pushbutton.

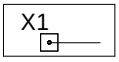

TERMINAL POINTS
Factory wired by EIM

CIRCUIT PLUG & RECEPTACLE

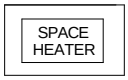

SPACE HEATER
Heater in Switch Compartment is standard

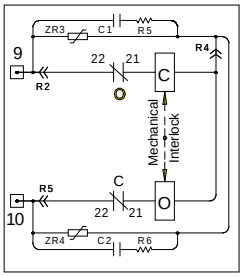

REVERSING CONTACTOR
Showing Open and Close coils, Mechanical Interlock, and Electrical Interlock Contacts O (21, 22) & C (21, 22)

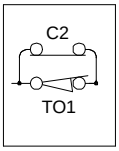

NUISANCE TRIP
To prevent (TSO) contact tripping when valve has been jammed closed - LSC contact allows valve to open slightly. Contact then open, ensuring torque protection for remaining travel

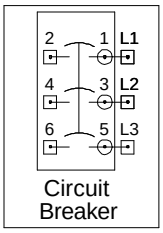

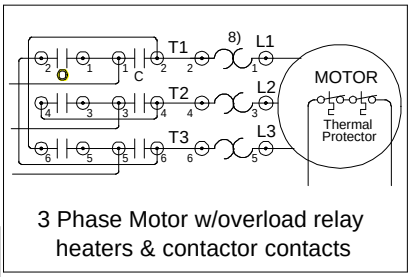

3 Phase Motor w/overload relay heaters & contactor contacts

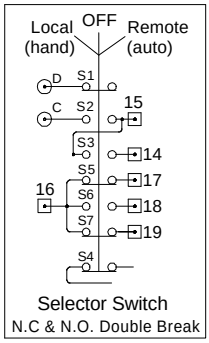

SS Table

	Hand	Off	Auto
S1	X	O	O
S2	O	O	X
S3	O	X	X
S4	X	X	O
S5	X	O	O
S6	O	O	X
S7	X	X	O

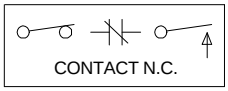

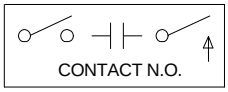

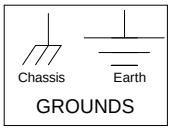

TROUBLE SHOOTING

SYMPTOM	PROBABLE CAUSE	CORRECTIVE ACTION
Motor will not Run	Blown Control Fuse	Check Fuse and Replace as necessary
	Open in Control Circuit	Refer to appropriate wiring diagram and check for continuity
	Insulation Resistance Breakdown in Motor	Perform Megger Test
No Power available to Actuator	Tripped Circuit Breaker	Reset Circuit Breaker
Handwheel Hard to Turn	Valve Stem improperly Lubricated	Lubricate with Grease
	Actuator Lubrication has broken down	Clean out old grease and replace with recommended lubricant
	Valve packing gland too tight	Loosen packing gland nuts as necessary
	Drive Sleeve Bearing Failure	Replace Bearing
	Jammed Valve	Refer to Valve Maintenance
Valve only opens or closes partially with motor	Torque Switch Setting too low	Check Setting and Reset if necessary
	Limit Switch Improperly Set	Check Switch Actuation and recalibrate if necessary
Torque switch is properly set, but actuator Torque's out in mid-travel, open or closed direction	Damaged or bent valve stem	Refer to Valve Maintenance
	Valve packing too tight	Refer to Valve Maintenance
	Jammed Valve (obstruction in line)	Refer to Valve Maintenance
Handwheel will not operate valve	Handwheel shaft bearing assembly malfunction	Repair or replace as necessary
	Sheared gear key or Stripped Gearing	Replace as necessary
	PS Shifter Position or Malfunction	Replace Gear(s)
	Broken Handwheel Shaft	Repair or replace as necessary
	Broken Valve Stem or Stripped Stem Nut	Repair or replace as necessary
Motor runs but will not operate the valve	Motor Bearing Assembly Malfunction	Repair or replace as necessary
	Sheared gear key (fastener pin)	Replace
	Stripped Gearing	Replace
	Broken Valve Stem or Stripped Stem Nut	Repair or replace as necessary
	PS shifter position or malfunction	Replace PS Assembly
Moisture in Electrical Enclosure	Leakage through Conduit Entry	Install an approved Seal-off or re-route conduit to enter Enclosure from the bottom of enclosure
	Electrical Enclosure is not properly sealed	Inspect and replace O-ring if necessary
	Space Heater Inoperable	Check Circuit continuity for Heater
Gear (Oil) in Electrical Enclosures	Pressure Relief Fitting not installed	Install Pressure Relief Fitting
	Bad Seal on T/L or G/L Assembly	Replace Stat-O-Seals or O-Rings
		Rotate Actuator Mounting

GATE VALVE WITH MOTOR OPERATOR

TABLE OF CONTENTS:

A. GATE VALVE

B. ELECTRIC MOTOR OPERATOR

GATE VALVE

TABLE OF CONTENTS:

A. DATA SHEETS

B. OPERATION AND MAINTENANCE MANUAL

MANUFACTURER: AMERICAN FLOW CONTROL

MODEL #: SERIES 2500

SIZE: 12”

SUPPLIER

HD SUPPLY WATERWORKS, LTD.
CONTACT: ERIC RIPPER
5000 FRANKLIN AVENUE
WACO, TEXAS 76170
(254) 772-7910

SERIES 2500 RESILIENT WEDGE GATE VALVE

RWGV1

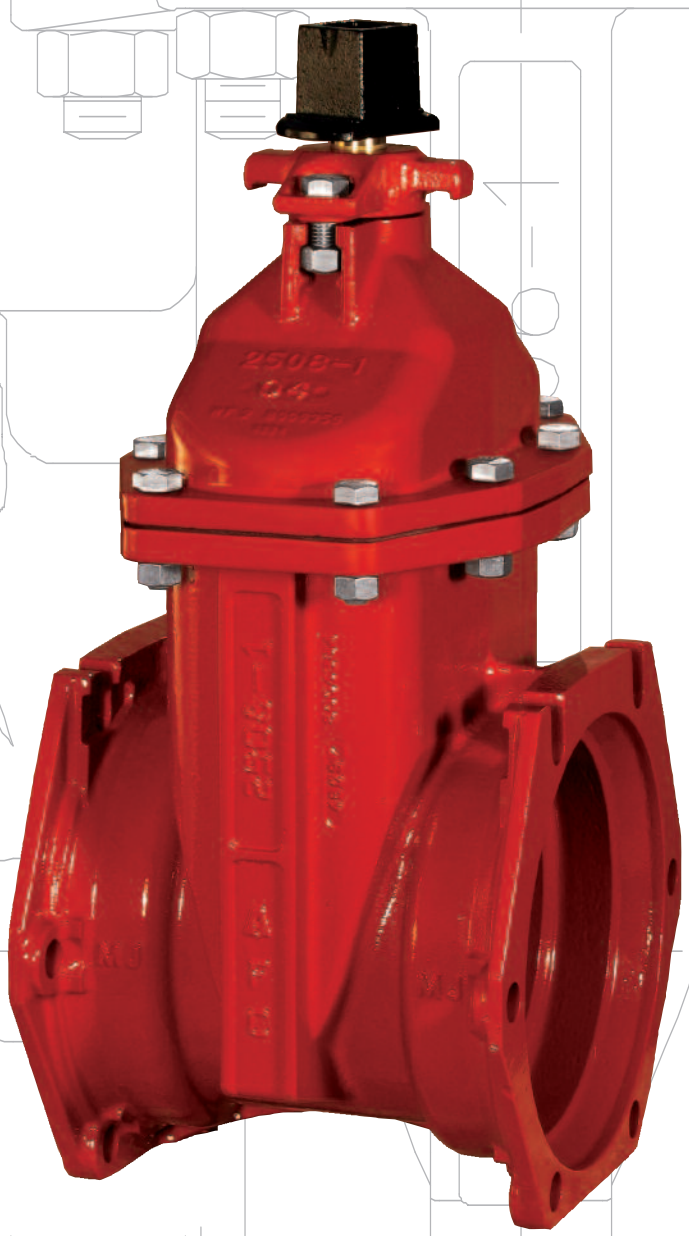

2"–12" 250 p.s.i.g.
SERIES 2500
RESILIENT WEDGE GATE VALVE

100 YEARS

AMERICAN FLOW CONTROL
It's What We Know.®

CONSTRUCTION

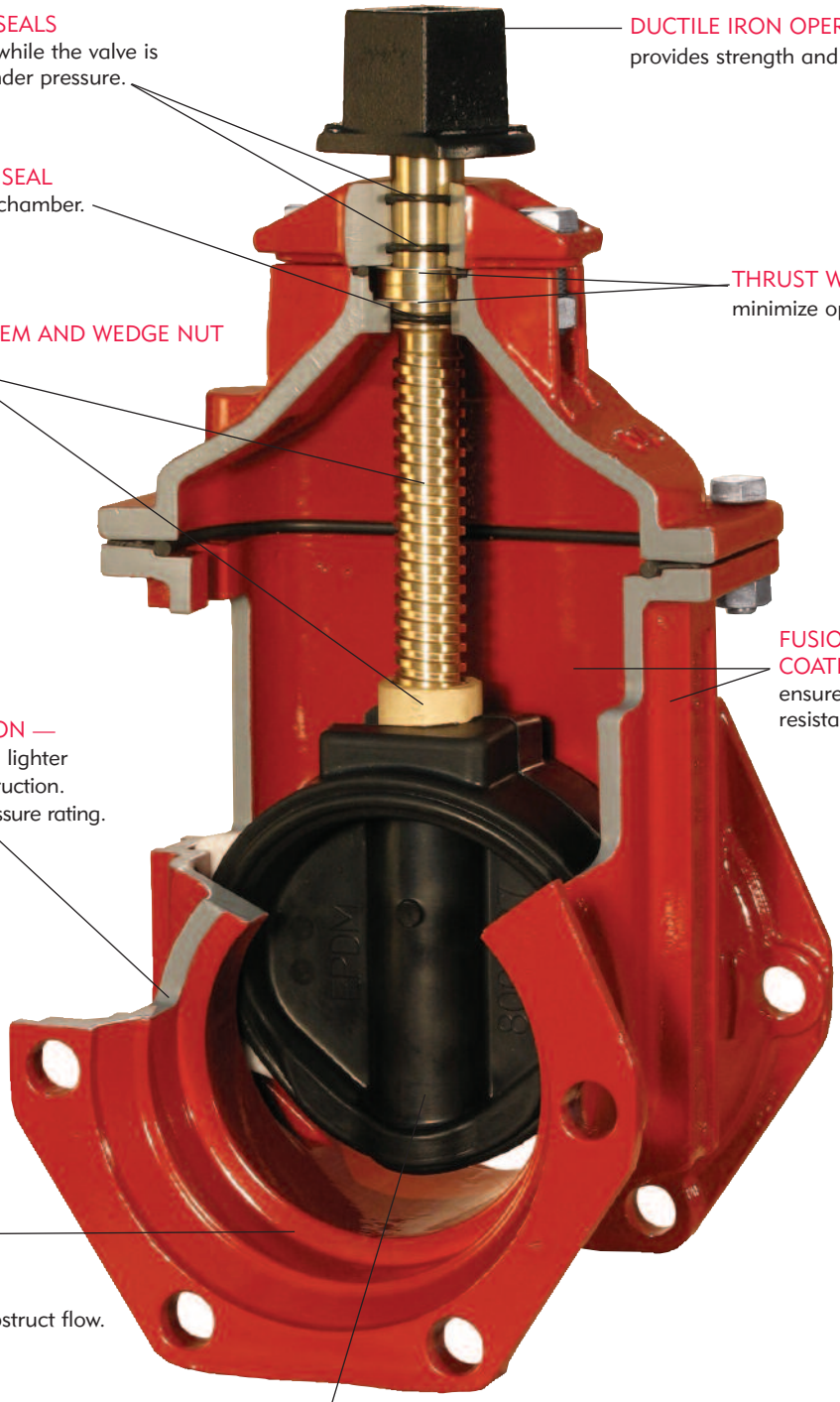

UPPER O-RING SEALS
can be replaced while the valve is fully open and under pressure.

LOWER O-RING SEAL
seals lubrication chamber.

HIGH-STRENGTH BRONZE STEM AND WEDGE NUT
resist corrosion and abuse.

DUCTILE IRON CONSTRUCTION —
Greater strength, durability, and lighter weight than cast gray iron construction.
250 p.s.i.g. AWWA UL & FM pressure rating.

SMOOTH WATERWAY CONSTRUCTION —
Oversize waterway.
No recesses to trap debris or obstruct flow.
Reduces pumping costs.

DUCTILE IRON OPERATING NUT
provides strength and durability.

THRUST WASHERS
minimize operating torque.

FUSION-BONDED-EPOXY COATING INSIDE AND OUT
ensures maximum corrosion resistance for long service life.

EPDM RUBBER-ENCAPSULATED DUCTILE IRON WEDGE
ensures drop tight seal every time with low stem torque.

FEATURES/BENEFITS/SPECIFICATIONS

FEATURES

The **Series 2500** Ductile Iron 250 p.s.i.g. AWWA Resilient Wedge Gate Valve is designed for use in drinking water, sewage, and fire protection systems as well as irrigation and backflow control systems.

Ductile Iron Construction

The ductile iron body, bonnet, and wedge provide strength and a pressure rating that meets or exceeds the requirements of AWWA C515. Strength more than doubles that provided by cast gray iron designs, and the pressure rating is 250 p.s.i.g. All this strength and higher pressure rating is provided in a compact, lightweight, and easy-to-handle ductile iron valve.

Fusion-Bonded Epoxy

The **Series 2500** valve is fully epoxy coated on the interior and the exterior. The fusion-bonded coating is applied prior to assembly so that even the bolt holes and body-to-bonnet flange surfaces are fully epoxy coated.

Triple O-Ring Stem Seals

This valve features triple O-Ring stem seals. Two O-Rings are located above, and one O-Ring is located below the thrust collar. The lower two O-Rings provide a permanently sealed lubrication chamber that will make the valve easier to operate over a longer period of time. The upper O-Ring ensures that sand, dirt, or grit cannot enter the valve to cause damage to the lower O-Rings. This is especially important for buried and sewage service applications.

Thrust Washers

Two thrust washers are used. One is located above, and one is located below the thrust collar. These thrust washers ensure easy operation at all times.

No Flat Gaskets

The body-to-bonnet and bonnet-to-bonnet cover seals are pressure-energized O-Rings. This eliminates the need for excessive bolt loading, which is required by designs that use flat gaskets. The O-Rings are reusable, which eliminates downtime during any needed repair.

The **Series 2500** Resilient Wedge Gate Valve is furnished in configurations that are Listed by Underwriters Laboratories, Inc. and Approved by Factory Mutual Research Corp.

BENEFITS

The **Series 2500 Ductile Iron Resilient Wedge Gate Valve** has these standard features:

- UL Listed-FM Approved
- Seat Tested at 500 p.s.i.g.
- Fusion-Bonded-Epoxy Coating Complies With ANSI/AWWA C550
- 250# Raised Face Flanges Available
- Ductile Iron Body, Bonnet, Wedge, Operating Nut, and Stuffing Box
- Shell Tested at 500 p.s.i.g.
- 250 p.s.i.g. AWWA UL and FM Pressure Rating
- Rubber-Encapsulated Wedge
- Triple O-Ring Stem Seals
- Thrust Washers
- Smooth (No Pocket) Waterway
- 100% Leak-Tight Closure
- NSF Standard 61 Certified
- Complies with AWWA C515

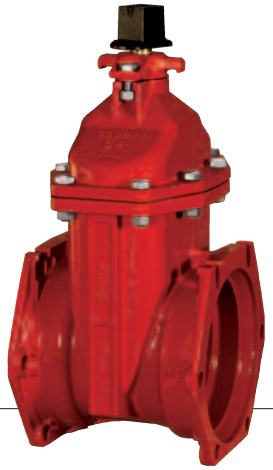

SPECIFICATIONS

Valves 2"-12" shall be resilient wedge type rated for 250 p.s.i.g. cold water working pressure. All ferrous components shall be ductile iron, ASTM A536. Valves 3"-12" shall be in full compliance with AWWA C515. The words "D.I." or "Ductile Iron" shall be cast on the valve. The wedge shall be ductile iron or bronze encapsulated with EPDM rubber.

The wedge shall be symmetrical and seal equally well with flow in either direction.

The gate valve stem and wedge nut shall be copper alloy in accordance with Section 4.4.5.1 of the AWWA C515 Standard. Stainless Steel stems are not acceptable. The NRS stem must have an integral thrust collar in accordance with Section 4.4.5.3 of AWWA C515 Standard. Two-piece stem collars are not acceptable. The wedge nut shall be independent of the wedge and held in place on three sides by the wedge to prevent possible misalignment.

Valves shall be certified by NSF to Standard 61.

Bolting materials shall develop the physical strength requirements of ASTM A307 and may have either regular square or hexagonal heads with dimensions conforming to ANSI B18.2.1. Metric size socket head cap screws, therefore, are not allowed.

The operating nut shall be constructed of ductile iron and shall have four flats at stem connection to ensure even input torque to the stem.

All gaskets shall be pressure-energized O-Rings.

Stem shall be sealed by three O-Rings. The top two O-Rings shall be replaceable with valve fully open and while subject to full rated working pressure. O-Rings set in a cartridge shall not be allowed.

Valve shall have thrust washers located with (1) above and (1) below the thrust collar to ensure trouble-free operation of the valve.

All internal and external surfaces of the valve body and bonnet shall have a fusion-bonded-epoxy coating, complying with ANSI/AWWA C550, applied electrostatically prior to assembly.

Valves shall be American Flow Control's **Series 2500 Ductile Iron Resilient Wedge Gate Valve.**

DRAWING/DIMENSIONS

SERIES 2500 – STANDARD NRS DIMENSIONS 2"-12" SIZES

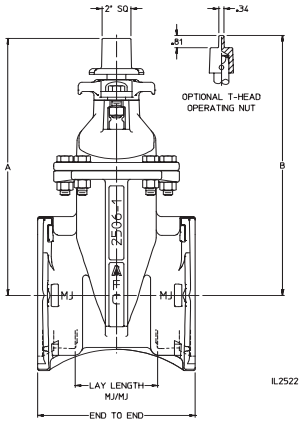

SHOWN WITH 2" OPERATING NUT

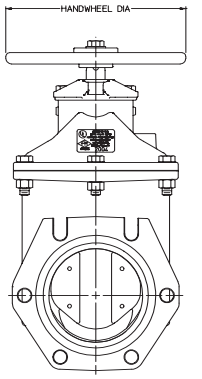

SHOWN WITH OPTIONAL HANDWHEEL

SUBMITTAL DATA

QUANTITY							
2"	2-1/2"	3"	4"	6"	8"	10"	12"
							1

☐ NRS with 2" Sq. Oper. Nut ☒ NRS with T-Head Oper. Nut
☐ NRS with Handwheel ☐ Post Indicator Valve (PIV)
☐ OS & Y

ACTUATOR (Check One)
☐ NRS with Enclosed Miter Gearing — EIM Electric Actuator
☐ 2" Sq. Oper. Nut Parallel to Waterway
☐ 2" Sq. Oper. Nut Perpendicular to Waterway
☐ Handwheel Perpendicular to Waterway

Open Direction:	☒ Left (C.C.W.)	☐ Right (C.W.)
End Connections:	Flanged	
Mechanical Joint Accessories:	☐ Yes	☐ No
UL Listed, FM Approved:	☒ Yes	☐ No
Other Requirements (List on a separate sheet):		

See notes at bottom of page.

DIMENSION	VALVE SIZE							
	Series 2500			Series 2500-1				
	2"	2-1/2"	3"	4"	6"	8"	10"	12"
A	9.25	11.03	11.84	13.91	17.12	20.47	24.06	27.59
B	10.22	12.00	N/A	N/A	N/A	N/A	N/A	N/A
End to End – MJ/MJ	8.25	N/A	8.62	10.00	10.50	11.50	12.50	13.50
Lay Length – MJ/MJ	3.25	N/A	3.62	5.00	5.50	6.50	7.50	8.50
End to End – FL/FL (Class 125)	7.00	7.50	8.00	9.00	10.50	11.50	13.00	14.00
End to End – FL/FL (Class 250)	N/A	N/A	11.12	12.00	15.88	16.50	18.00	19.75
End to End – TY/TY	N/A	N/A	N/A	13.00	15.88	17.50	18.75	19.75
End to End – FL/MJ (Class 125)	N/A	N/A	N/A	9.50	10.50	12.28	13.62	14.38
End to End – FL/TY (Class 125)	N/A	N/A	N/A	11.00	13.19	14.50	15.88	16.88
End to End – PVC/PVC	10.75	11.12	11.38	13.00	15.88	17.50	N/A	N/A
End to End – Threaded	6.25	7.38	7.38	N/A	N/A	N/A	N/A	N/A
Handwheel Diameter	8.06	8.00	8.00	10.00	12.00	14.00	15.50	15.50
No. of Turns to Open	9	11	13	14	20	26	32	38

1. 3" through 12" valves meet or exceed requirements of ANSI/AWWA C515.
2. 2-1/2" through 12" valves may be ordered in configurations which are UL Listed and/or FM Approved.
3. 2" through 12" valves have 250 p.s.i.g. AWWA rated working pressure.
4. 2-1/2" through 12" valves have 250 p.s.i.g. UL and FM rated working pressure.
5. Fusion-bonded-epoxy coating meets or exceeds requirements of ASME/AWWA C550.
6. Flanged ends are in accordance with ANSI/AWWA C110/A21.10 (ASME B16.1, Class 125).
7. Threaded ends are in accordance with ASME B16.4, Class 125.
8. Mechanical joint ends are in accordance with ANSI/AWWA C111/A21.11.
9. Tyton® ends and push-on ends are in accordance with ANSI/AWWA C111/A21.11 for use on cast iron (CI) size ductile iron pipe.
10. PVC ends are suitable for use on steel (IPS) sizes of PVC or steel pipe.
11. 4" through 36" valves are certified to ANSI/NSF Standard 61.
12. It is recommended that stems be vertical in raw sewage applications.

DRAWING/DIMENSIONS/PARTS LIST

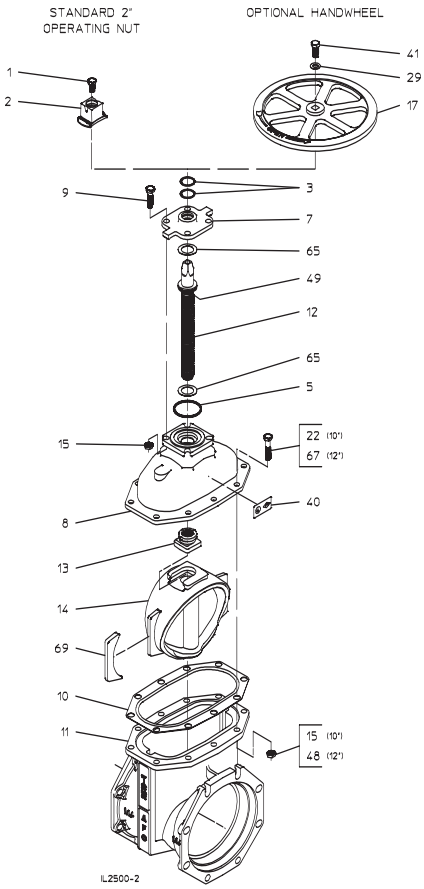

SERIES 2500-1 – STANDARD NRS PARTS LIST
10" & 12" SIZES

REFERENCE NUMBER	DESCRIPTION	MATERIAL	QTY Series 2500-1	
			10"	12"
1	Hex Head Bolt, 5/8-11 x 1"	Stainless Steel	1	1
2	Operating Nut, 2" Square	Ductile Iron	1	1
3	O-Ring	Nitrile Rubber	2	2
5	Stuffing Box Gasket	Nitrile Rubber O-Ring	1	1
7	Stuffing Box	Ductile Iron	1	1
8	Bonnet	Ductile Iron	1	1
9	Hex Head Bolt, 5/8-11 x 2"	Stainless Steel	4	4
10	Bonnet Gasket	EPDM Rubber	1	1
11	Body	Ductile Iron	1	1
12	Stem	Manganese Bronze	1	1
13	Wedge Nut	Manganese Bronze	1	1
14	Resilient Wedge	Ductile Iron, Encapsulated with EPDM Rubber	1	1
15	Hex Nut, 5/8-11	Stainless Steel	14	4
17	Handwheel	Ductile Iron	1	1
22	Hex Head Bolt, 5/8-11 x 2-3/4"	Stainless Steel	10	–
29	Flat Washer, 5/8	Stainless Steel	1	1
40	UL/FM Label	Pressure-Sensitive Acrylic Film	1	1
41	Hex Head Bolt, 5/8-11 x 1-1/2"	Stainless Steel	1	1
48	Hex Nut, 3/4-10	Stainless Steel	–	10
49	O-Ring	Nitrile Rubber	1	1
65	Thrust Washer	Stainless Steel	2	2
67	Hex Head Bolt, 3/4-10 x 3"	Stainless Steel	–	10
69	Wedge Cover	Acetal	2	2

Operation

1. Direction of opening is indicated by an arrow cast on the handwheel or wrench nut of the valve.
2. Operate gate valves from full closed to full open position and back before applying pressure.
3. Close gate valve slowly against pressure to avoid damage from surge or water hammer.
4. Valves installed on liquid service subject to freezing conditions should be protected to prevent trapping of liquid in the bonnet cavity, expansion on freezing and subsequent damage. The same is true of valves which are subject to considerable temperature increases. Trapped pressure should be vented back to the upstream side to prevent buildup of pressure in the valve bonnet due to high temperature expansion.
5. Valves should be opened and closed without the use of excessive torque applied to the handwheel or wrench nut. Excessive torque may damage the valve.

Maintenance

1. Operate gate valves from full open to full close at regular intervals. The length of time between operations depends upon the time of installation and the service conditions.
2. Use Mystic FG−2 or equivalent food grade grease for the stem threads and thrust collar.
3. Chipped spots in the epoxy coating should be repaired with a liquid two part epoxy.

⚠ CAUTION

To prevent possible personal injury, do not remove bonnet bolts with valve under pressure.

Spare Parts

Under most conditions, the only spare parts needed for the valve would be upper and lower stem O−rings. Under rigorous service, stems, wedges, upper and lower stem O−rings and thrust washers should be carried as spare parts.

Use parts list drawings as a guide for disassembly and ordering repair parts. Also refer to disassembly/reassembly instructions.

Typical Operating Torque At Rated Working Pressure

Valve Size	Closing Torque Ft−lbs	Opening Torque Ft−lbs
2”	15−20	15−20
2−1/2”	15−20	15−20
3”	30−40	30−40
4”	30−40	30−40
6”	50−60	50−80
8”	70−80	60−90
10”	90−100	125−150
12”	100−125	140−175
14”	Contact Factory	
16”	Contact Factory	
18”	Contact Factory	
20”	Contact Factory	
24”	Contact Factory	
30”	Contact Factory	
36”	Contact Factory	
42”	Contact Factory	
48”	Contact Factory	

SERIES 2500 − TROUBLESHOOTING GUIDE

<table>
<tr><th>Problem</th><th>Solution</th></tr>
<tr><td>Leakage</td><td>
Depending on the location of the leakage, the following should be examined.
1. SEAT: Foreign material may be stuck under the valve wedge. Open valve only enough to get high velocity flow to flush out valve. Repeat several times until leak stops. If this does not solve the problem it is then necessary to open the valve and check for damage to the rubber encapsulated wedge. If it is damaged or severely cut, replace the wedge.
2. STEM: The stem seals are of the O−ring type and the valve has a thrust collar (electric actuated valves normally do not have thrust collars). The seals can be replaced while the valve is under water pressure by back seating the valve in the open position. On OS&Y valves leakage can be stopped by evenly tightening the packing gland bolts. If leakage cannot be stopped, the valve should be repacked.
3. BODY: Check for cracked or damaged valve body or bonnet. If damage has occurred, contact manufacturer for further instructions.
4. BOLTED CONNECTIONS: Check for loose bonnet to body bolts, stuffing box bolts or end joint bolts and tighten as necessary. This should be done prior to pressurization of the line. If line is pressurized, pressure should be relieved prior to tightening any bolts. Do not tighten bolts past the yield strength of the bolt. Reinstall all bolts and nuts and tighten alternately to 70−90 ft.−lbs. of torque.
</td></tr>
<tr><td>Valve is Hard to Operate or is Inoperable</td><td>
1. A valve can become inoperable or hard to operate during testing of the pipeline. Prior to relieving pipeline pressure, the valve should be opened to relieve any trapped pressure.
2. The application of excessive torque on a valve can cause permanent damage to the operating parts. A common source of excessive torque is from the use of portable power actuators. Output torques generated by these machines should be adjusted to be suitable for the valve size. The last or first turns of operation should be done by hand.
Number of Turns to Open/Close
<table>
<tr><th colspan="3">Series 2500</th><th colspan="5">Series 2500−1</th><th colspan="8">Series 2500</th></tr>
<tr><td>2”</td><td>2−1/2”</td><td>3”</td><td>4”</td><td>6”</td><td>8”</td><td>10”</td><td>12”</td><td>14”</td><td>16”</td><td>18”</td><td>20”</td><td>24”</td><td>30”</td><td>36”</td><td>42”</td><td>48”</td></tr>
<tr><td>9</td><td>11</td><td>13</td><td>14</td><td>20</td><td>26</td><td>32</td><td>38</td><td>44</td><td>50</td><td>56</td><td>62</td><td>73</td><td>568</td><td>672</td><td>694</td><td>789</td></tr>
</table>
3. If valve has not been operated periodically, excessive buildup could occur that would affect valve operation. The valve should be exercised one turn at a time and cycled from open to closed as necessary to attempt removal of internal buildup.
</td></tr>
<tr><td>Valve Leaks During Testing</td><td>
1. Resilient seated gate valves per AWWA C−515 have a zero allowable leakage rate. If a leak is detected while testing, it is necessary to find the cause.
2. If seat leakage is detected, it may be due to trapped air in the line or foreign material. Open the valve enough to get high velocity flow to flush out valve. Repeat several times until leakage stops.
3. If testing between valves, allow enough time to fill the valve and vent off air.
</td></tr>
</table>

Disassembly

⚠ WARNING

To prevent possible personal injury, do not make repairs while valve is under pressure.

1. Remove bolts and nuts that attach operating nut and stuffing box.
2. Remove operating nut and stuffing box.
3. Back stem out of bonnet by turning in the closing direction.
4. Inspect O−rings and, if damaged, remove from stuffing box and stem. Replace with new O−rings and lubricate with food grade grease.
5. Inspect thrust washers and stuffing box gasket (O−ring) and replace if damaged.
6. Remove bolts and nuts that attach bonnet to valve body. Remove bonnet to inspect bonnet gasket, wedge nut, wedge and interior of valve body. Replace parts if damaged.

Reassembly

Reassembly is the reverse of disassembly while paying attention to the following points.

1. Make sure wedge nut is seated fully into slot in wedge.
2. Make sure the bonnet gasket is positioned correctly on the valve body flange when bonnet is assembled onto valve body.
3. Lubricate stem threads before installing into bonnet and threading into wedge nut. Turn stem in opening direction.
4. Position stuffing box gasket in top of bonnet and slide stuffing box onto stem being careful not to cut the stem seal O−rings.
5. Reinstall all bolts and nuts and tighten alternately to 70−90 ft.−lb. of torque.

SERIES 2500 – STANDARD NRS REPAIRS

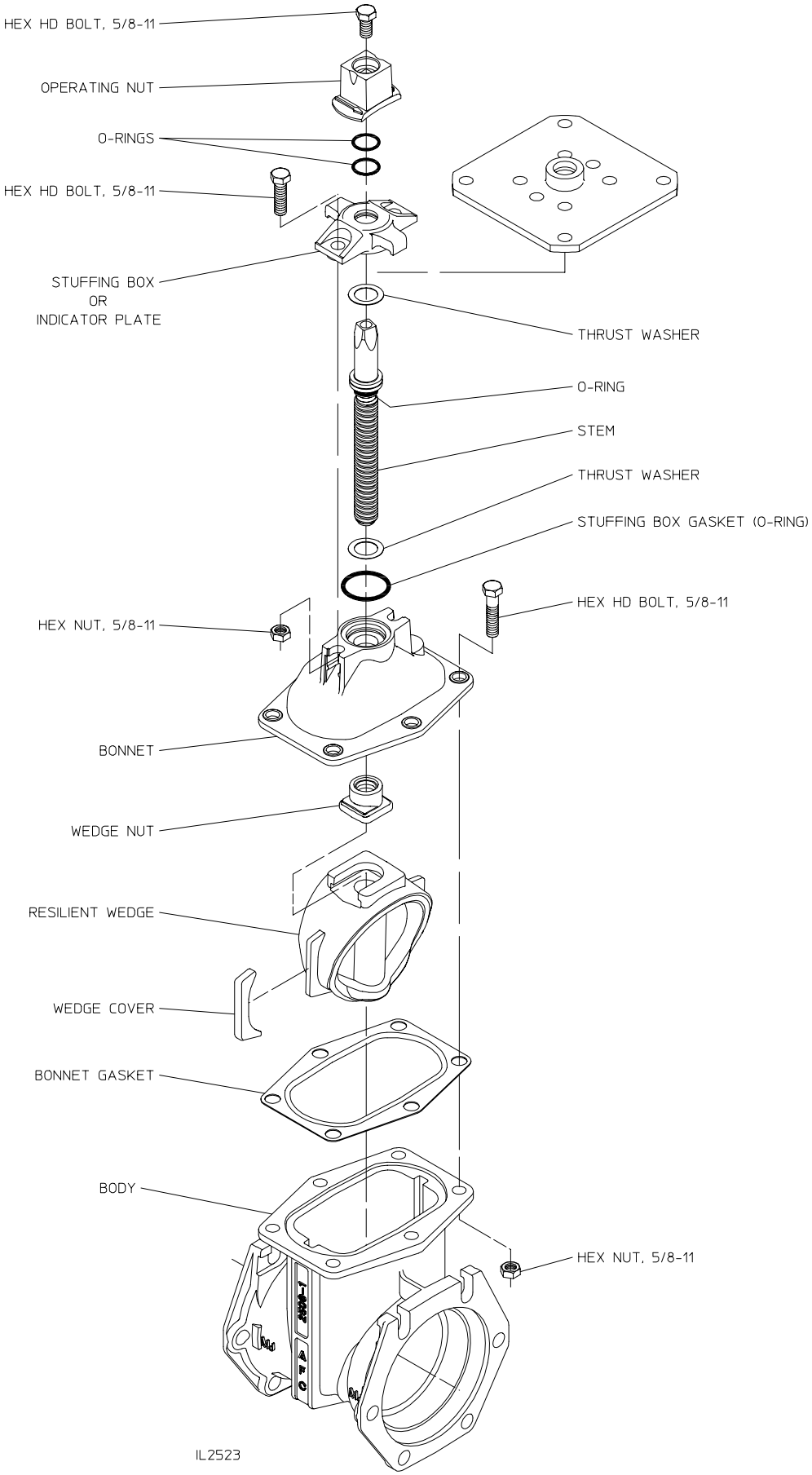

ELECTRIC MOTOR OPERATOR

TABLE OF CONTENTS:

A. DATA SHEETS

B. OPERATION AND MAINTENANCE MANUAL

MANUFACTURER: **EIM**

MODEL #: **MCC1-6**

SUPPLIER

CONTROLS INTERNATIONAL, INC.
CONTACT: RAND UNDERWOOD
10410 VISTA PARK ROAD
DALLAS, TEXAS 75238
(214) 343-9980

SERIES 2000 ELECTRIC ACTUATOR

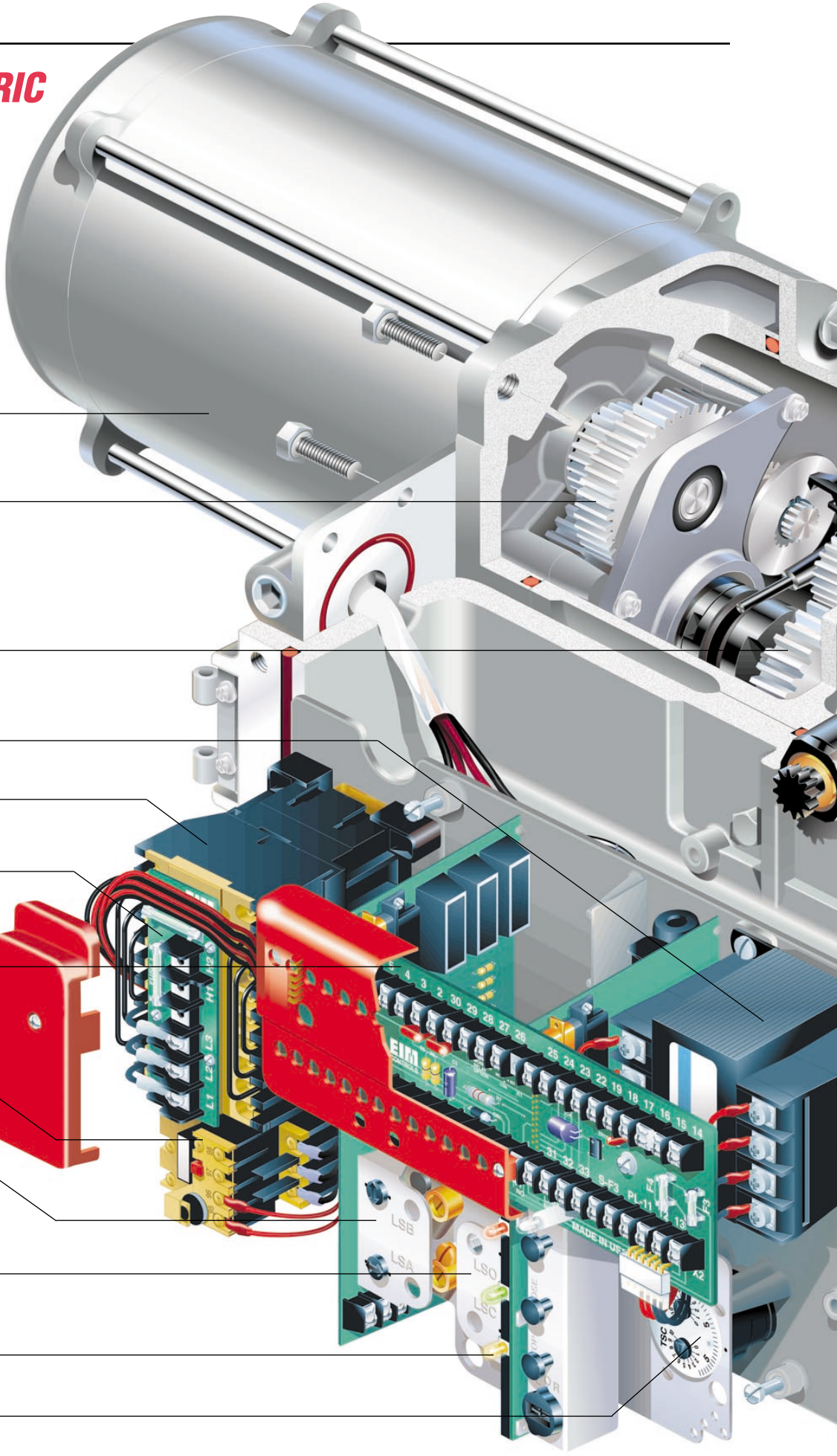

Motor options include most voltages of single phase or three phase alternating current and direct current. Motors are available with built-in thermal protection.

Motor Gear selections allow for speed and torque output combinations.

Handwheel Gearset allows user to limit the rimpull required to operate valve manually regardless of torque required.

Transformer is fully encapsulated and epoxy impregnated.

Reversing Contactor is DIN rail mounted for quick maintenance.

Power Module (PWR) provides transformer primary fuses and terminal strip for motor voltage.

Terminal Board Module (TBM) provides connection points for user wiring and transformer secondary fuses.

Overload Relay senses over-current to provide motor thermal protection.

Intermediate Switch Module (ISM) available in different options including Controlinc, Futronic modulating controls, Interposing relays, and Intermediate limit switches.

Limit Switch Module (LSM) allows combinations of position limit switches, torque switches, push buttons, pilot lights and selector switch.

LED's (light emitting diodes) are used to provide reliable service and long life.

Torque Switch protects the valve and actuator; in both the open and close directions.

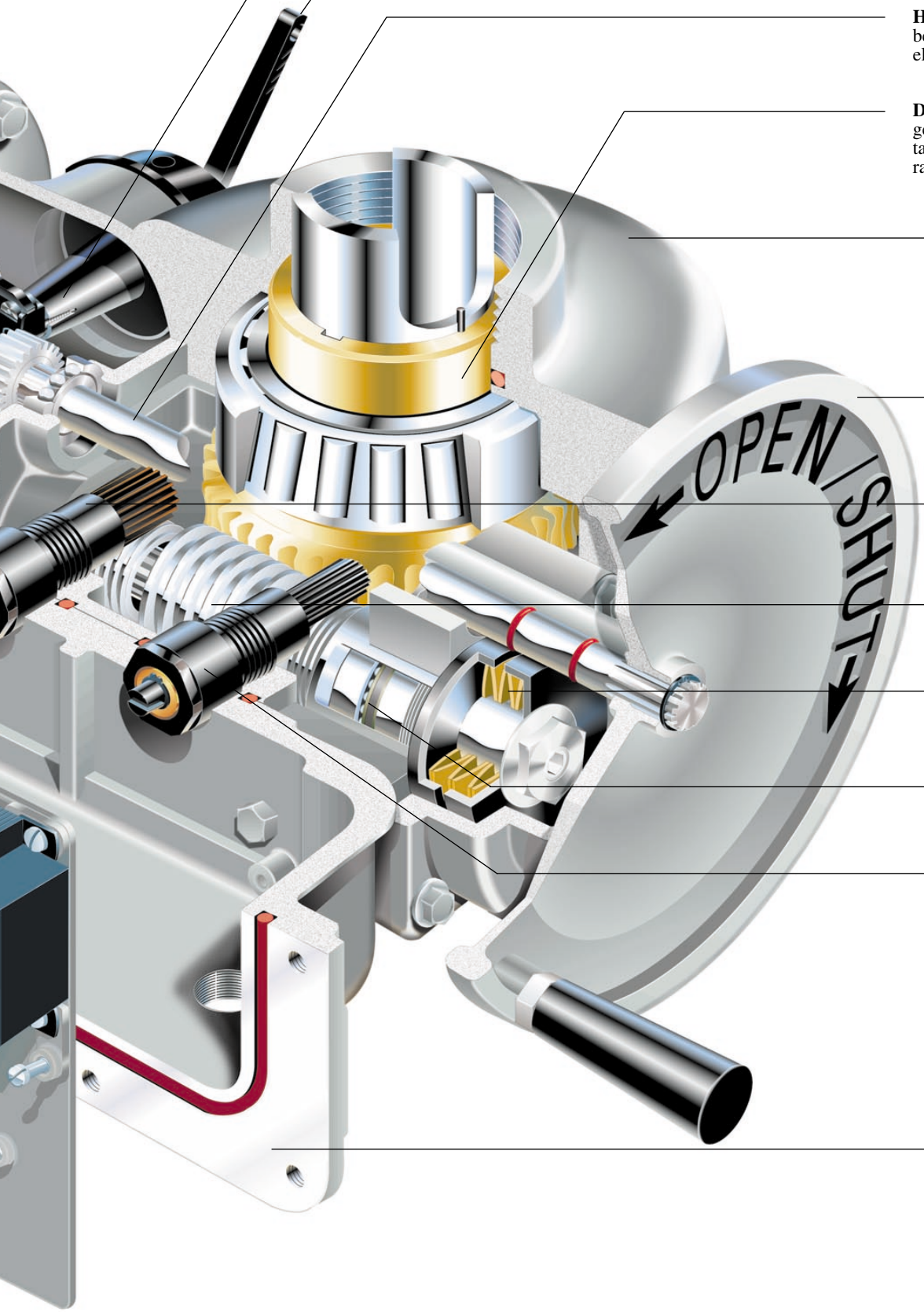

Power Shift Clutch requires minimal force to operate even when valve is tightly seated.

Clutch Handle is padlockable in either hand or motor position to prevent unauthorized use.

Handwheel Shaft is supported by bearings and is splined at both ends to eliminate keys.

Drive Sleeve consists of a bronze worm gear and drive sleeve supported by tapered roller bearings for maximum radial and thrust load support.

Main Housing is high strength ductile iron across the Series 2000 family to provide maximum strength and ductility.

Handwheel for manual valve operation in emergency or power outage.

Geared Limit Drive Assembly remains in-step with valve position at all times.

Worm Shaft is heat-treated alloy steel.

Torque Springs accurately sense torque independent of electronics and regardless of voltage fluctuations.

Roller Bearings support the worm shaft.

Torque Limit Assembly receives rotary mechanical feedback from torque springs directly through main worm shaft.

Electrical Compartment Enclosure features hinged cover, O-ring seals, stainless steel hardware, and multiple conduit entries.

2000 SERIES ELECTRIC ACTUATORS
STANDARD FEATURES DESCRIPTION & OPTIONS

The 2000 Series Electric Actuators from EIM Co. Inc., are available in three (3) Basic Designs;

a. ~~MCP Series - these are "hard-wired" type actuators to meet specific customer requirements~~
b. M2CP Series - based on Modular PC Board construction
c. ~~TEC2000 Series - "Non Intrusive Smart Actuator" Technology~~

The Standard Mechanical Construction for ALL above series utilize the following;

- Ductile Iron Housing Construction
- All 316 stainless steel external hardware
- Class "F" Insulated Motor Windings with (2) Thermal Relays imbedded in the windings (rated 155°C)
  - 15, 30 & 60 minute duty ratings available, +/-10% of nominal voltage (AC motors only)
  - Available power supplies are;
    - ~~208/230/380/440/460/575/660 Volt, 3 Phase, 60 Hz~~
    - ~~220/380/415/400 Volt, 3 Phase, 50 Hz~~
    - 115/208/230 Volt, 1 Phase, 50 & 60 Hz * SPECIFY IF 230/1
    - ~~12/24/48/125 V.D.C. (MCP Only)~~
- Declutchable Manual Over-ride Handwheel, padlockable in manual and motor operation
  - Handwheel Rim Pull at 80 lb maximum, unless otherwise specified
- Travel Limits are "geared" and in always in step with valve stem travel whether in manual or motor operation
- Mechanical "Torque Sensing" - not dependent on electronics (sliding worm & Belleville spring principle)
- Quarter-Turn Actuators include an external graduated position dial indicator, and built-in adjustable end-of-travel mechanical stops (+/- 5°)
- Extensive range of motor gearing & worm gear ratios to meet any required output speed
  - From 2 rpm to 250 rpm.
- Electrical Enclosure Ratings available are;
  - NEMA 4 & 6 (IP65/67) Weatherproof - temporary submergence 6 ft for 24 hours)
  - NEMA 4X (IP66) Weatherproof & Corrosion Resistant
  - IP 68 Submersible - 50 ft for 72 hours - ***M2CP Rating***
  - ~~Type 6P submersible - 50 ft for 7 days - *TEC2000 Rating - F.M. Certified*~~
  - F.M.. (Factory Mutual) Explosionproof
    - Class I, Division 1, Group B (Option) - ***Not MCP***
      Standard for TEC2000
    - Class I, Division 1, Groups C & D
    - Class II/III, Division 1, Groups E,F & G
  - C.S.A.. (Canadian Standards Association Explosionproof
    - ~~Class I, Division 1, Groups B - *TEC2000 Only*~~
    - Class I, Division 1, Groups C & D
  - SIRA (European), EEx d IIB T4 & EEx d IIB 120°C (T4)
    - II 2 GD
    - EEx d IIB T4 @ Ta60°C, IP68
    - EEx d IIB T4 + H2T4 @Ta 60°C, IP68
    - EEx d IIB 120°C(T4) @Ta 60°C, IP68
    - ~~SIRA Certificate Number: Sira 00ATEX1510, dated 29 January 2004 - *TEC2000 Series*~~
      ~~Also covers *Remote Display (RDM) Module*~~
    - SIRA Certificate Number: Sira 03ATEX1510, dated 29 January 2004 - ***2000 Series***
    - SIRA Certificate Number: Sira 02ATEX1147, dated 24 October 2002 - ***Circuit Breaker (CBM) Module***
      Also covers ***Pushbutton (PBM) Modules - 2000 Series***
    - Complies with requirements of EN 50014:1997 (A1 & A2), EN 50018:2000 (A1), EN 5028-1-1:1999
  - Conduit Entrances are;
    - MCP & M2CP Series - (2) 1 1/2" NPT & (4) 3/4" NPT
    - ~~TEC 2000 Series - (1) 1-1/2" NPT & (3) 1" NPT~~
- External grounding lug

2000 SERIES ELECTRIC ACTUATORS
STANDARD FEATURES DESCRIPTION & OPTIONS

The Standard Mechanical Construction for ALL above series utilize the following;

- E.P. (Extreme Pressure) Grease Lubricated Gear Train
  - Standard Grease rated for -20°F to +300°F (-29°C to +150°C)
  - Refer to EIM-025 specification sheet for complete data ——→ INCLUDED
  - ~~Optional Lubricants suitable for -60°F (-50°C) - EIM's "Arctic Package"~~
- TGIC-Polyester Powder Coated.
  - Meets Military Standard MIL-C-24712
  - Refer to EIM-026 specification sheet for complete data ——→ INCLUDED
  - Color, Haze Gray
- Ambient Temperature Rating
  - Standard Ambient temperature rating is -30°F to +150°F (-34°C to +66°C)
  - "~~Arctic" Package temperature rating is -60°F (-50°C~~)

2000 SERIES ELECTRIC ACTUATORS
STANDARD FEATURES DESCRIPTION & OPTIONS

M2CP Series Features;

- Standard Features;

- Control Compartment, Hinged, O-Ring Sealed, with 316 stainless steel screws and hinges
- 2 Train (2 position) Geared limit Switch
  - Close Position, LSC - (3) N.O. & (3) N.C. contacts
  - Open Position, LSO - (3) N.O. & (3) N.O. contacts
  - 10 amps @ 125/230 VAC, 3 amps @ 28 VDVC inductive
- Open & close Torque Switch
  - (1) N.O. contact each direction of travel
  - 10 amps @ 125/230 VAC, 3 amps @ 28 VDVC
- Jumper selectable Features;
  - Torque or Position Seating
  - 10 amps @ 125/230 VAC, 3 amps @ 28 VDVC inductive
- TBM (Terminal Board) Module
  - 48 point Control Terminal Board with transient voltage snubber circuit
    - (2) Secondary Transformer Fuses
    - Power-On LED Indicating Light (internal)
- Power Terminal Strip, isolated from Control Power TBM

Note: Non-Integral requirements for Single Phase and Direct Current D.C. applications requires use of MCP Design

- Optional Extras;

- **Integral Design** (Open/Close control)
  - (3) Pushbuttons, (2) LED Lights, 3-Position Selector Switch
  - Reversing Contactor, Mechanicaly & Electrical Interlocked, 25 Amp Rated
    - Starter rated for 1200 starts per hour
    - Starter equipped with Isolation Power Terminal & (2) Primary Fuses
  - 75 VA Epoxy Encapsulated and Impregnated Control Transformer
  - Options for Local Controls
    - Up to (3) Pushbuttons
    - Up to (4) LED Indicating Lights
    - (3) Position Selector Switch
  - Options for Intermediate Limit Switch Contacts - (2) N.O. & (2) N.C. (rated as above)
- **Futronic II** (Positioning Control, +/- 3% at minimum of 45 second operating time)
  - ***3 Phase or 1 Phase Power Supply***
    - 3 Phase Motors rated 1200 starts per hour
    - 1 Phase Motors rated 100 Starts per hour
  - Includes above Integral Controls, including (3) Pushbuttons, (2) LED Lights, and 3-Position Selector Switch (Manual-Off-Auto)
  - Band, Span and Zero Adjustments
  - 4-20mA Input Signal & Output Transmitter (Optically Isolated)
    4mA = closed
    20mA = open
  - 1000 Ohm Position Feedback Potentiometer (internal use only)
  - Intermediate Limit Switch Contacts - (2) N.O. & (2) N.C.
  - Loss of Command Signal Option:
    - Remain In Last Position
    - Go to Preset Position

FOR REFERENCE ONLY - DRAWING NOT TO SCALE

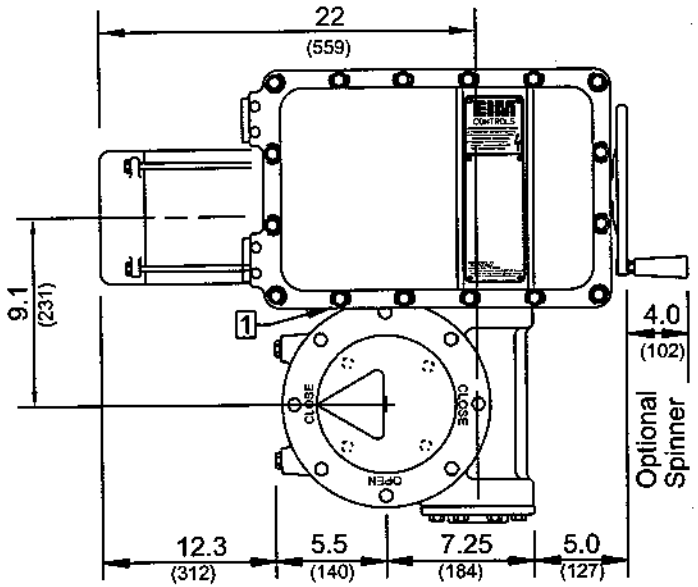

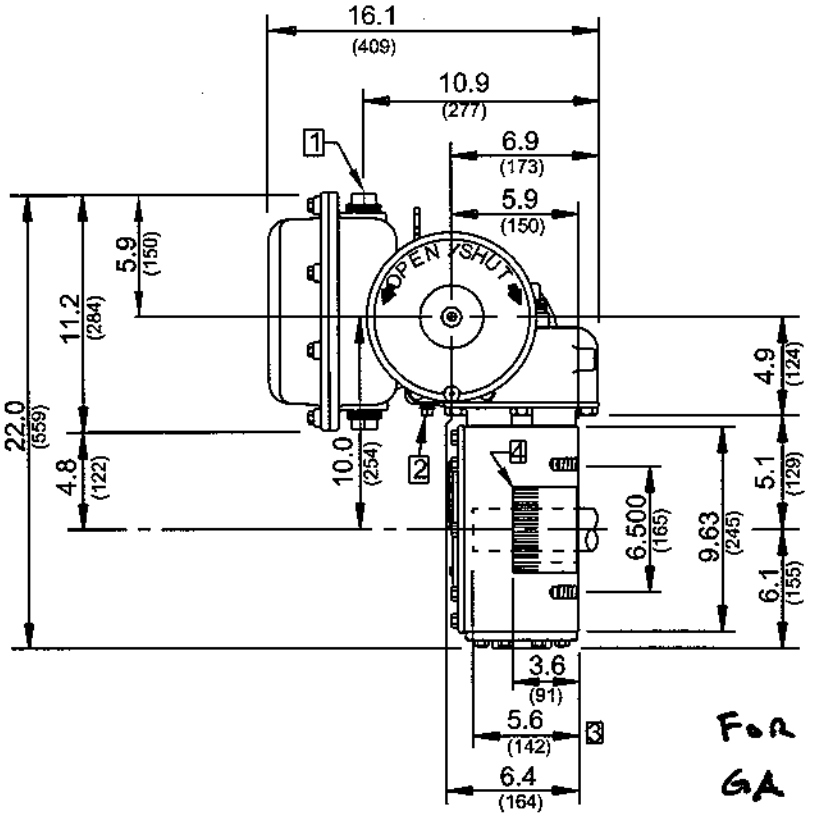

For 24"
GA AWWA BFV

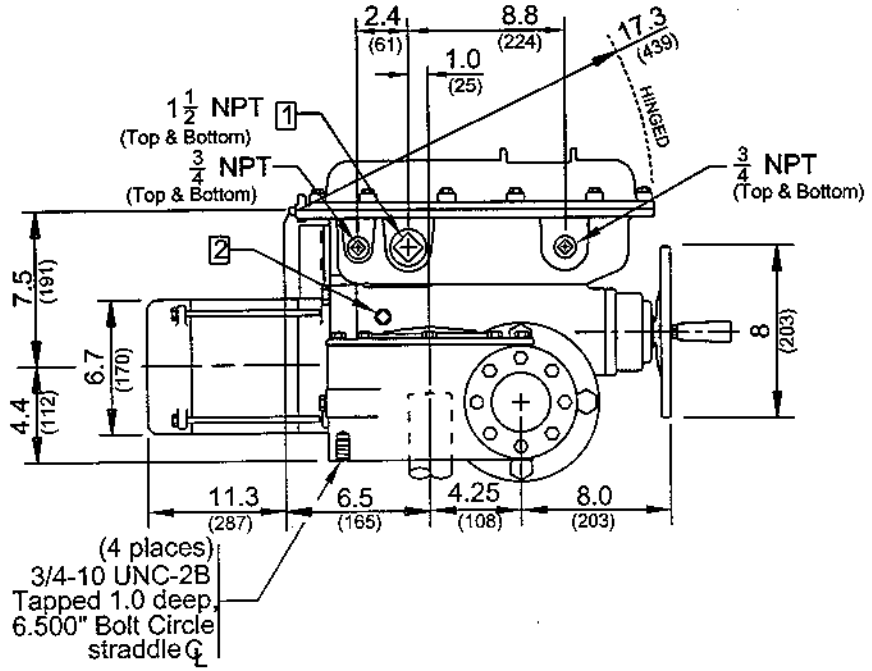

1. 1½ NPT is preferred wire entry top or bottom.
2. Lubrication ½ -14 NPT plug.
3. Maximum valve stem length into actuator.
4. Spline Bush: Removable from the bottom of actuator. Refer to EIM Job Spec Sheet for Bushing furnished for specific application.

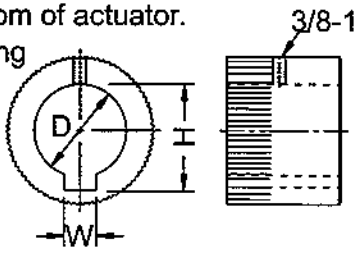

INCHES (MILLIMETERS) .XXX ± .005" .XX ± .020" .X APPROX.

EIM COMPANY, INC.
13840 PIKE ROAD
CONTROLS MISSOURI CITY, TX 77489

REV	DATE	ERO	BY
A	6/15/95	9587	/CML

TITLE: M / MG02 1/4 T 6.50"

OUTLINE NO. M-2001/16G REV A

1. [1] 1.50-11 NPT (2 Plcs) is preferred wire entry. CAUTION Conduit must enter at lowest point to prevent water from entering electrical enclosure due to condensation. If hazardous (classified) or Nema 6 location, conduit seal required at electrical enclosure entrances.
2. [2] Lubrication $\frac{1}{2}$-14 NPT plugs.
3. [3] P/N 34706 Bushing. Maximum bore stem size is 2.00" (1/2 Sq Key)
4. For electrical control pilot device elements mounted on actuator control cover, see EIM job spec sheet & wiring diagram furnished for each specific job no.

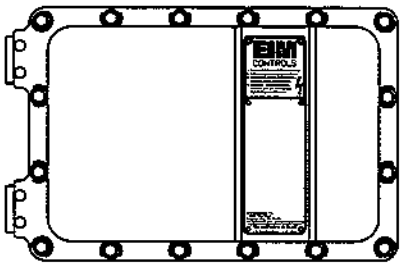

5. WARNING - The installation and servicing instructions are for use by qualified personnel only. To avoid injury and electric shock, do not perform any service on EIM equipment unless qualified.
6. Installation shall be in accordance with current edition of National Electrical Code.

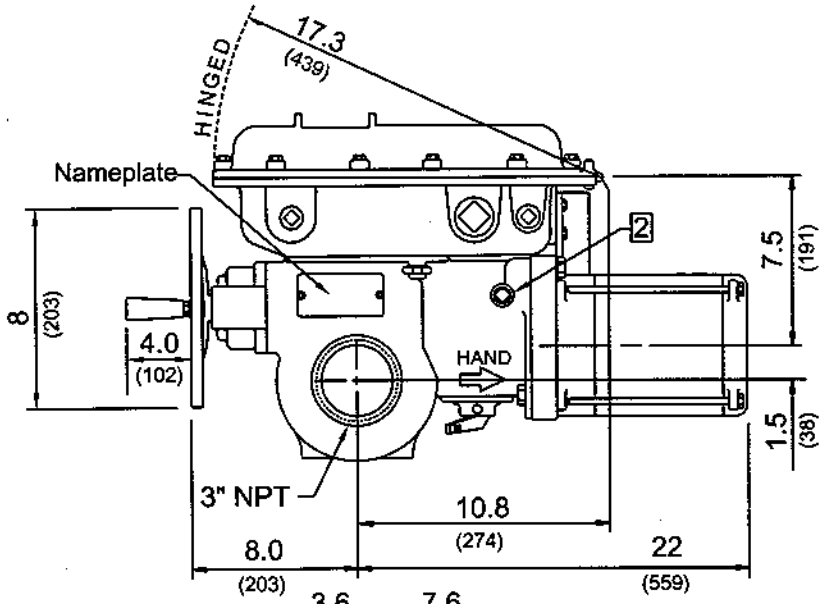

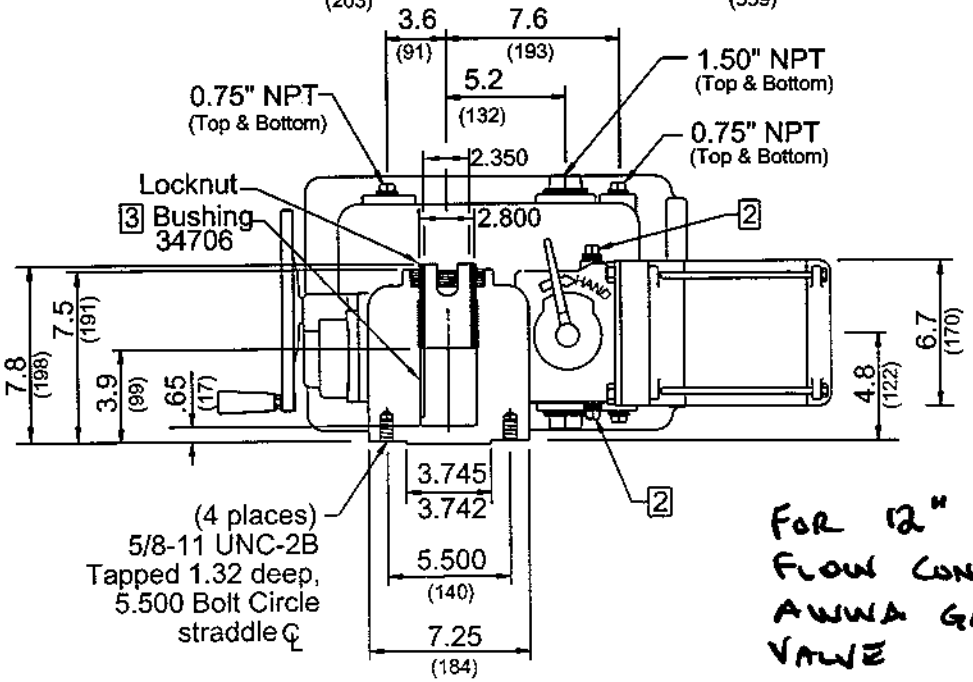

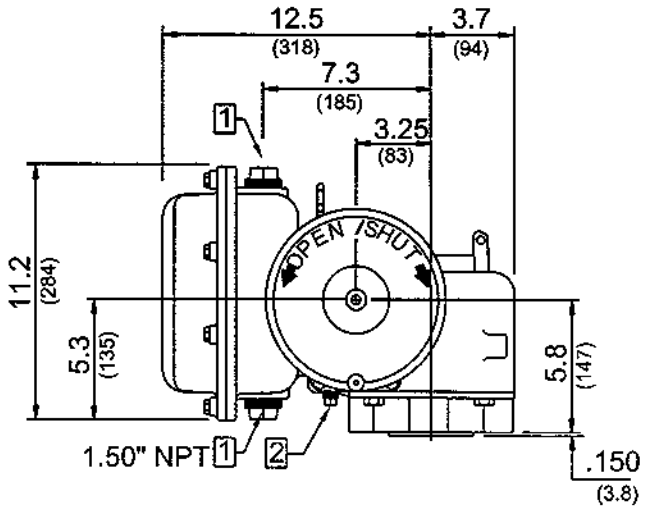

FOR 12" AMERICAN FLOW CONTROL AWWA GATE VALVE

INCHES (MILLIMETERS) .XXX ± .005" .XX ± .020" .X APPROX.

EIM COMPANY, INC.
13840 PIKE ROAD
CONTROLS MISSOURI CITY, TX 77489

TITLE: Type U M/T 5.50

OUTLINE NO. U-0001/14G REV C

REV	DATE	ERO	BY
C	3/7/01	13561	LHE/c

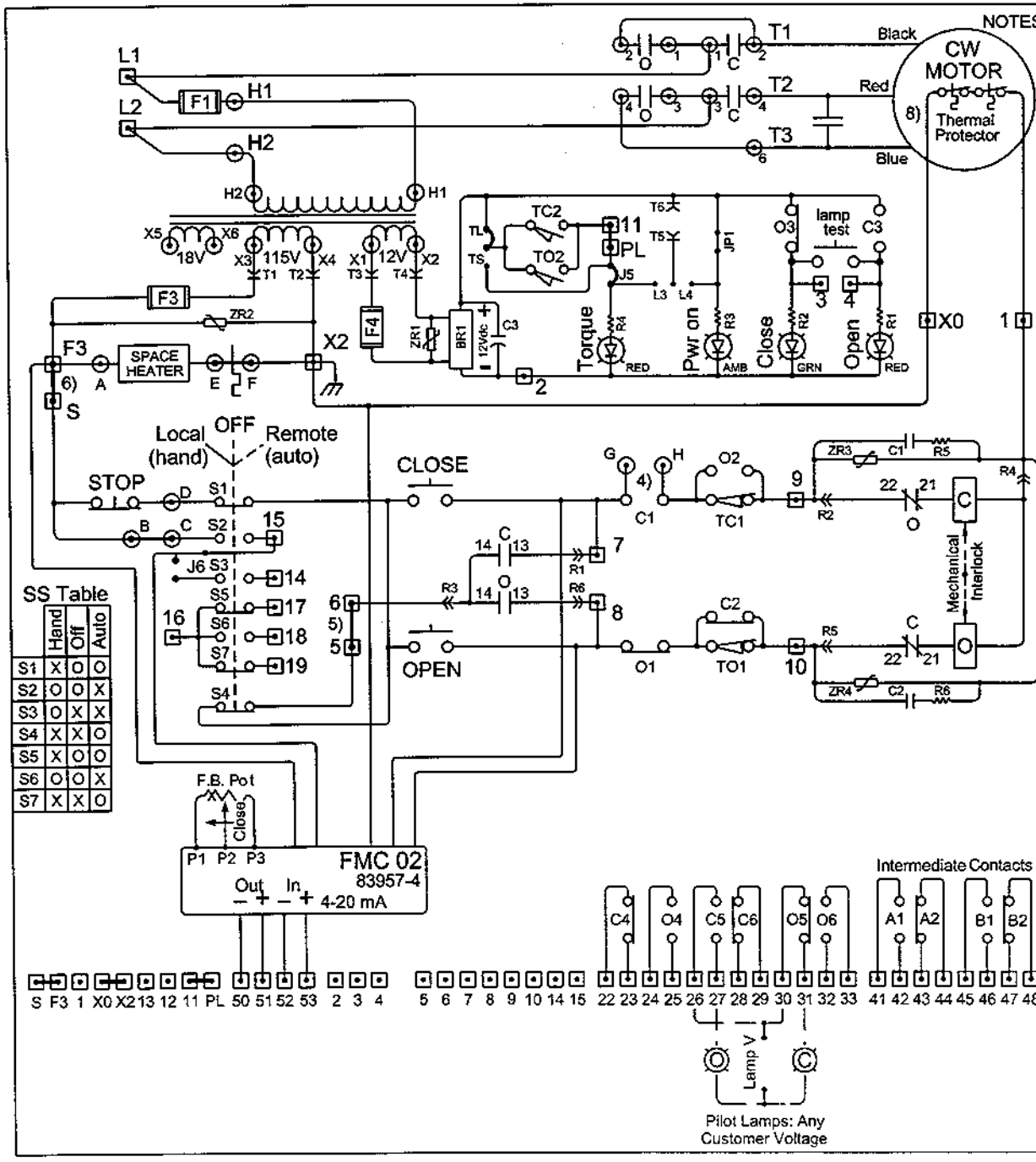

NOTES:
1) Contacts shown: **Valve Closed**, Voltage: **Off**, S/S :**Hand**
2) ⊡ Customer wires to terminals on PWR and TBM modules
⊙ M2CP Internal terminal interconnect wiring points.
– – – – Field Connected Wiring by **OTHERS** .
3) Torque switch TC1 & TO1 NC contacts open, and TC2 & TO2 contacts make on field adjustable mechanical overload in (C) Close, or (O) in Open direction.
4) For Torque seated valve: Install G to H strap on LSM.
5) For maintained PB control: remove 5 to 6 strap on TBM.
6) For remote stop PB or relay: remove F3 to S strap on TBM
7) O & C (22-21) Reversing contactor NC interlock contacts.
O & C (14-13) Momentary pushbutton NO seal-in contacts.
8) Motor thermal contacts open with excessive temperature.
9) Position Indicator Pilot Lights: LED solid-state
OPEN indicates: Full Open (RED)
CLOSE indicates: Full Closed (GREEN)
Mid-Position : Both OPEN and CLOSE illuminated.
Pwr ON and Torque Indicators are only visible with cover open for convenience during maintenance procedures .

TYPICAL FOR BOTH VALVES – MODULATING

SS Table

	Hand	Off	Auto
S1	X	O	O
S2	O	O	X
S3	O	X	X
S4	X	X	O
S5	X	O	O
S6	O	O	X
S7	X	X	O

		Valve Position			Contact Function
		Close	MID	Open	
CLOSE rotor	C1	O	X	X	Close coil
	C2	X	O	O	Bypass TO1
	C3	O	X	X	Open lamp
	C4	X	O	O	
	C5	O	X	X	
	C6	X	O	O	
OPEN rotor	O1	X	X	O	Open coil
	O2	O	O	X	Bypass TC1
	O3	X	X	O	Close lamp
	O4	O	O	X	
	O5	X	X	O	
	O6	O	O	X	
A	A1	O	X		Spare
	A2	X	O		Spare
B	B1	O	X		Spare
	B2	X	O		Spare

LSM	TBM	RCT	MTR	FMC			
01	01	02	04	02			

EIM COMPANY, INC.
13840 PIKE ROAD
CONTROLS MISSOURI CITY, TEXAS

DWN BY SB ORIGINAL DATE 6-19-98

WIRING DIAGRAM M2CP-400

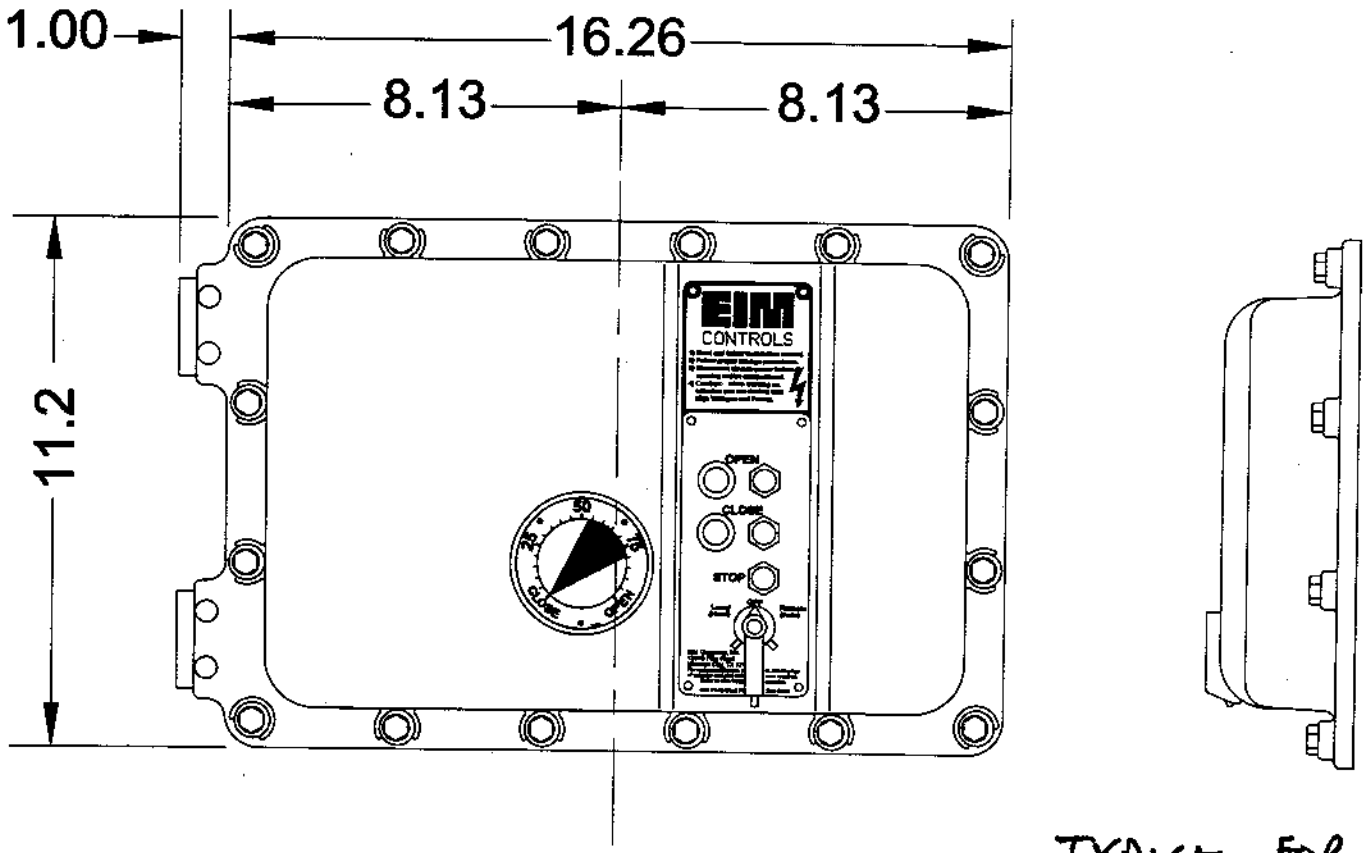

TYPICAL FOR BOTH VALVES

INCHES (MILLIMETERS) .XXX ± .005" .XX ± .020" .X APPROX.

EIM COMPANY, INC.
13840 PIKE ROAD
CONTROLS MISSOURI CITY, TX 77489

TITLE: M2CP 3B, 2L, SS & MDPI CVR

REV	DATE	ECO	BY
A	2/26/04	13664	/CML

OUTLINE NO. 72534 REV Δ

Factory Mutual Research

1151 Boston-Providence Turnpike
P.O. Box 9102 Norwood, MA 02062 USA
T: 781 762 4300 F: 781 762 9375 www.fmglobal.com

CERTIFICATE OF COMPLIANCE

HAZARDOUS (CLASSIFIED) LOCATION ELECTRICAL EQUIPMENT

This certificate is issued for the following equipment:

Series 2000 Valve Actuators (MCP and M2CP designs). Model abcd-ef.

a = Model Type
- (1, 2, 3, 4, 5, 6, 7, 8 and 9) Multi-Turn with torque and thrust.
- (E or H) Multi-Turn side mount on bevel gear.
- (F or G) Multi-turn torque only.
- (P, Q and R) Quarter turn-top mount.
- (D, S, U or A) Multi-turn (no thrust).
- (J, K, L or V) 2 Turn top mount.
- (M or W) Quarter turn-side mount on 1/4T gear box.
- (B) Multi-turn with ball screw output.
- (C) Multi-turn with ball screw temperature compensated.
- (T) Multi-turn with temperature compensation.
- (N) Navy actuators DOD-V-24657 (SH).

b = Motor horsepower A, B, C, D, E, F, G, H, J, K, L, M, N, P, Q, R, S, T, U, V, W, 1-9 and X, Y, Z.
c = Motor gear ratio A, B, C, D, E, F, G, H, J, K, L, M, N, P, Q, R, S, T, U, V, W, X, Y and Z.
d = Valve adaption code to describe max Acme and Stem Size, max Shaft Size, Bolt Circle, Screw Size, Qty Screw, Worm Ratio and Hand of Gearing.
e = Motor voltage or pneumatic pressure 1,2,3,4,5,6,7,8,9,B,C,D,E,F,G,H,J,K,L,M,N,P or T (65-150 psi).
f = Additional features F,C,H,P,M,E,D,SCM,PBM,CBM (CBM for Groups C,D,E,F,G) or none.

Special Condition of Use:
**T4 temperature code rating when valve actuator motors are protected with 130ºC rated thermal cutouts, and T4A temperature code rating when valve actuator motors are protected with 115ºC rated thermal cutouts.*

CBM and PBM Modules.

Equipment Ratings:

Suitable for Class I, Division 1, Groups B, C and D; Class II, Division 1, Groups E, F and G; and Class III, Division 1 hazardous (classified) locations (MCP Valve Actuators and CBM Module do not include Group B rating).

Approved for:

EIM Company, Inc.
Missouri City, TX 77489

An FM Global Affiliate

This certifies that the equipment described has been found to comply with the following Factory Mutual Research Approval Standards and other documents:

FM 3600	1998
FM 3615	1989
FM 3810	1989
(with Supplement 1)	1995
ANSI/NEMA	1991

Original Approval Job Identification: 1G2A3.AE Approval Granted: December 20, 1982

Subsequent Revision Reports / Date Approval Amended

0T9H0.AE	August 10, 1992
2Y4A4.AE	March 5, 1997
3011622	July 13, 2001

Factory Mutual Research Corporation

Robert L. Martell Jr.
Assistant Vice President
Approvals Division

7-13-01
Date

An FM Global Affiliate

LUBRICANTS

Through extensive testing under the most severe load and temperature conditions, EIM has standardized on special formulated lubricant compounds for our range of Electric and Pneumatic Actuators and Manual Worm & Bevel Gear Operators.

Grade #221 Moly Ultra 800 E.P.

All 2000 Series Actuators, except Models 3000, EB, E, & G are factory lubricated with this special compound.
For actuator output speeds up to and including 96 RPM.
Additionally, all WO & WB Series Worm Gear Operators utilize this lubricant.

It is a multi-purpose extreme pressure grease specially formulated for use in actuators under adverse conditions of excessive pressure, heat, cold, moisture, and both high speed and low speed operation. It is compounded from select high viscosity index solvent refined severely hydrofinished 100% pure paraffin base oils. Blended into the base oils is an aluminum complex base thickener and selected additives including molybdenum disulfide. This formulation provides:

- Resistance from water washout.
- Shear and mechanical ability
- Anti-wear and extreme pressure load carrying properties and excellent reversibility.
- Rust and oxidation inhibiting characteristics
- The molybdenum acts as a back-stop due to it's natural affinity to adhere to metal surfaces. It reduces friction, resulting in reduced wear and reduction in gear contact operating temperatures.
- ***The EIM rated operating lubricant temperature range is -20°F to +175°F (-29°C to +80°C)***

GREASE PROPERTIES	
Color	Black
Thickener	Aluminum Complex
ASTM Dropping Point	500°F / 260°C
Pumping Temperature	-40°F / -40°C
Texture	Smooth
Tmken E.P. Test (ASTM D-2509)	60 lbs

BASE OIL PROPERTIES	
Viscosity @ 100°F	615 SUS
Viscosity Index	96
Flash Point	500°F / 260°C
Pour Point	-40°F / -40°C

~~**Grade #200SUG Special Multi-Lube - Note: Actuators are tagged with "Green Label"**~~

All 2000 Series Actuators with output speeds above 96 RPM, including 3000. Also for E,G,W Models

It is a semi-synthetic, heavy duty extreme pressure, non-solvent containing lubricant compounded from a blend of select solvent refined severely hydrofinished high viscosity index paraffin base oils and polyaphaolefin synthetic base oils. A combination of molybdenum and solid lubricants are compounded to improve the anti-wear, extreme pressure characteristics and load carrying capabilities.

- ***The EIM rated operating temperature range is -30°F to +175°F (-34°C to +80°C)***

Special Note: This lubricant is recommended as an additive to the previously furnished "Red Bentone" grease or any other grease such as Texaco multi-gear EP, etc.

Cartridge Tubes are available from EIM, Part No. 36931, Price $10.00 each.

GREASE PROPERTIES	
Color	Black/Silver Flecks
Pumping Temperature	-50°F / -45°C
Texture	Fluid / 27% Solid
Tmken E.P. Test (ASTM D-2509)	60 lbs

BASE OIL PROPERTIES	
Viscosity @ 100°F	559 SUS
Viscosity Index	96
Flash Point	425°F / 218°C

Grade #197 Moly Pure Synthetic Lube - Note: Actuators are tagged with "Red Tag"

All 2000 Series Actuators, all speeds, specifically for **"Low Temperature"** applications

It is a multi-purpose, extreme pressure, specially formulated for use in low temperature actuator applications. It is compounded from the highest quality polyalphaolefin (PAO) synthethic base oils available. Blended into this is a bentone basde thickener and selective additives.

- ***The EIM rated operating temperature range is -60°F to +105°F (-50°C to +40°C)***

Note: For these low temperature applications, called "Artic Packages", the EIM motors are also furnished with sealed bearings using Dow Corning® 33 Extreme Low Temperature bearing grease. Motors aslo include line voltage motor heaters

COATING / PAINT SYSTEM

EIM utilizes a Thermosetting Powder Coating on all Electric & Pneumatic Actuators and certain size Worm Gear Actuators. It is type TGIC-POLYESTER, Color Haze Gray. All exterior and interior surfaces are coated including the inside of the electrical compartment.

The system meets Military Specification MIL-C-24712 and has received approval from NAVSEA SIMA, San Diego. It is also approved by the Underwriters Laboratory and is listed as UL 1332.

All "Bare Metal Flamepath" surfaces be spray coated with "CRC Industrial Di-Electric Grease" to avoid surface corrosion. This should be done each time these surfaces are exposed to the atmosphere.
Spray cans can be obtained from: CRC Industries, Inc., Warminster , PA 18974, Tel: (800)- 521-3168, Part No. 03082

Surface Preparation

- Each external component is shotblasted to a commercial finish (SSPC-SP6) to remove oxidation, light surface oils, and to provide a light profile for increased adhesion.
- The components are pre-heated with SOLUCOAT 5039 at 2.5 to 3.0% at 150°F for 2 minutes. This crystalline conversion coating (iron/phosphate) increases paint adhesion and prevents underpaint corrosion.
- Each component is then rinsed to remove any chemical residue and emulsified grease and oil.
- The components are again heated and sealed with SOLUCOAT 5038 at 150°F. This sealed iron/phosphate coating provides the corrosion resistance required.
- Each part is then hot air dried at 400°F until all parts are dry.

TEST METHODS	COATING PROPERTIES	
ASTM D523-89	Gloss at 60°	50-60
HOI TM 10.219	PCI Powder Smoothness	7
ASTM D2454-91	Overbake Resistance, Time	100%
ASTM D3363-92a	Pencil Hardness	H-2H
ASTM D2794-93	Direct Impact; Gardner	20 in/lbs
ASTM D3359-59, B	Adhesion, Cross Hatch	5B Pass
ASTM D522-93a	Flexibility, Mandrel	3/8 in. dia., no fracture
ASTM B117-95	Salt Spray	1,000 hours
	Film Thickness	2.5 - 3.5 Mils

For Model Sizes EB-03 & 04, and large Worm Gear Operators, (MG05 to 08 & WO/WB 64 & larger), and Bevel Gear Operators the following is used:
Ameron Amerlock 400 Epoxy Coating

Finish	Semi-Gloss
Color	Pearl Gray
Components	2
Volume Solids	83%
Film Thickness	5 to 8 mils
Coats	1

Material Safety Data Sheet (MSDS)

EIM maintains complete MSDS Sheets on the above paints. If copies are required, contact the "Safety Manager".

Coating Over Powder Coated Parts

There are two recommended methods for applying a paint coat over the powder coating.

1. A strong solvent such as acetone or M.E.K. (methyl-ethyl-ketone) can be used ***with care***. Wipe the surface quickly and allow time for the solvents to flash off before apllying coating. Also use a flowing rinse with virgin solvent after the initial solventis through the top coat.
   Caution: thses solvents are somewhat expensive and very flammable!

2. Sanding or other means of abrasion can be used but insure the abrasive media is completely removed prior to coating.

Manual E796

2000 M2CP

When communicating with EIM for replacement parts or for technical questions, we MUST have actuator nameplate information, including Job, Serial, and Model numbers. This allows us to check EIM records of your actuator.

When ordering parts, specify repair part by EIM part number and description from drawings furnished with actuator.

EIM Parts Department Fax (281) 261-3834

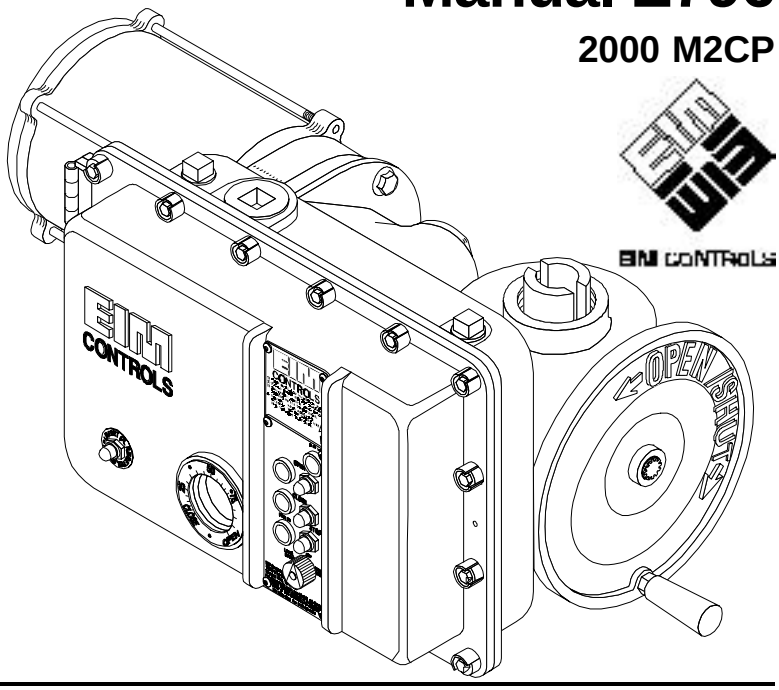

TABLE OF CONTENTS **Page**

Storage Instructions 2
M2CP Electrical Hook Up 2
Assembly to Valves 3
Limit Switch Setting Instructions 4
Torque Switch Setting Instructions 5
MDPI & Potentiometer Gear Box 5
Futronic II 83957 Calibration 6
Trouble Shooting & Wiring Diagram Symbols 7

DO

1. **DO follow proper storage procedures.** Improper storage will void warranty.
2. ***DANGER*: DO check for proper motor rotation.** If valve goes wrong direction when button is pushed, you have no torque or limit protection. 3-Phase incoming power voltage must have 2 wires reversed.
3. **DO read and follow procedures** before attempting to energize actuator.
4. **DO cut off electric power before opening switch compartment.**
5. **DO install relief vent in highest point of gearbox.**
6. **DO use valve stem covers** of sufficient length.
7. **DO clean electrical enclosure flange** thoroughly & lightly grease before closing.
8. **DO secure electrical enclosure bolts** (10-12 ft-lbs).
9. **DO follow an annual maintenance procedure.**
10. **DO use caution** when working on, with, or around valves and actuators. You can be dealing with high pressures, forces, voltages and flammable media.

DON'T

1. **Don't Start-up** without reading this manual.
2. **Don't stack actuators.**
3. **Don't store actuator on the ground unprotected.**
4. **Don't lift the unit** by clutch lever or handwheel.
5. **Don't lift a valve assembly** by electrical actuator.
6. **Don't operate electrically without first** checking proper phase rotation, torque and position limit switch adjustments (follow instructions on pgs 2, 4 and 5).
7. **Don't plug actuator motor** by starting and stopping repeatedly to move a too stiff valve. Check for cause.
8. **Don't jumper torque switches** except as recommended by Wiring Diagram or Valve Manufacturer.
9. **Don't use oversize thermal motor overloads** to eliminate tripping problem. Find cause and correct.
10. **Don't use a cheater** to force the handwheel. You can damage gearing and shafts. Find cause and correct.
11. **Don't torque seat valve,** sluice gate or damper unless the valve manufacturer recommends.

LUBRICATION

EIM Actuators are factory filled with a high quality lubricant carefully selected to insure actuator performance under specified operating conditions. Refer to EIM JOB SPEC SHEET to identify the lubricant provided. Normal operation *may not* require lubricant replacement.

MAINTENANCE

At least once a year a check should be made of your EIM actuator.

a) Disconnect ***all*** electrical power to actuator.

b) Open electrical enclosure. Inspect & tighten all electrical connections.

c) Visually inspect for any electrical or mechanical damage. Replace worn or damaged components.

d) Check lubrication consistency and level. Fill or replace if required.

PRESSURE RELIEF

During operation of electric actuator, the gear temperature increase in combination with variations of outdoor temperature will cause a small pressure build-up within actuator gear box. EIM furnishes Pressure Relief Vent Fitting Part No. 83385. Placement on Actuator can be determined only after field location and position of valve has been determined. Select the highest 1/2 NPT vent location on actuator gear box; remove 1/2 NPT plug and replace with 83385. The possible locations of vent are shown on EIM Outline Drawing.

SHORT TERM STORAGE

(Stored at Job Site less than one year from shipment)

1. Actuator should be stored with motor shaft in horizontal position and electrical enclosure in either the horizontal or vertical position.
2. Actuator should be stored indoors free from job site dirt, mud, moisture and temperature changes.
3. If indoor storage is not possible, the actuator must be stored off the ground above possible water or snow level. Remove M2CP and store with other electrical and electronic equipment in protected warehouse. If M2CP is not removed, Space heater MUST be energized to protect electrical controls.
4. EIM supplies NPT plugs in each conduit entry. Do not remove until electrical hook-up. The customer conduit should be routed to enter electrical enclosure at 1-1/2 (1.50) NPT located at lowest point, so condensation does not drain into enclosure and damage parts.
5. Cover units loosely with a plastic sheet. This serves as partial protection from rain.

LONG TERM STORAGE

(Stored more than one year from shipment)

1. Store indoors or M2CP should be removed and stored in a protected area. Follow procedures of short term storage.

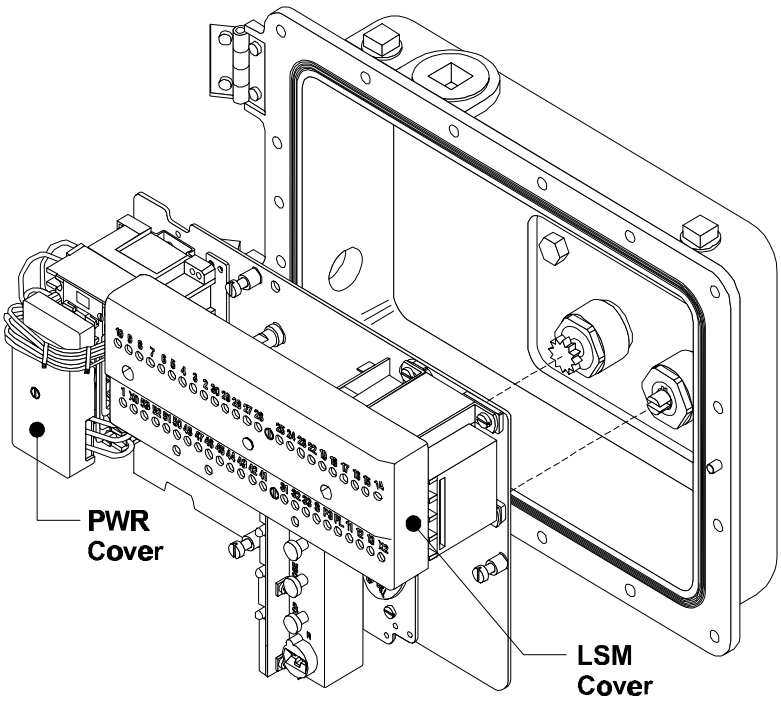

FAILURE TO STORE ACTUATOR PROPERLY WILL VOID WARRANTY OF ELECTRICAL & ELECTRONIC COMPONENTS

M2CP ELECTRICAL HOOK-UP Remove PWR and TBM covers to expose terminals for customer wiring.

EIM Modular Modular Control Package (M2CP) is available configured in many combinations of electrical and electronic parts. Refer to **WIRING DIAGRAM** and **EIM JOB SPEC SHEET** for components provided by EIM. Connect control wires to TBM and Power (motor) Voltage to PWR terminals. If optional M2CP mounted circuit breaker was specified, connect power voltage leads to circuit breaker. EIM terminal blocks are furnished with wire binding screw connectors with rising captive plates, allowing field connection by several methods: 1) strip and connect bare wire, 2) strip and install wire ferrule, 3) strip and install crimp-on insulated or non-insulated ring tongue or similar terminal. Circuit Breaker accepts 1) bare wire strip, or 2) wire ferrule.

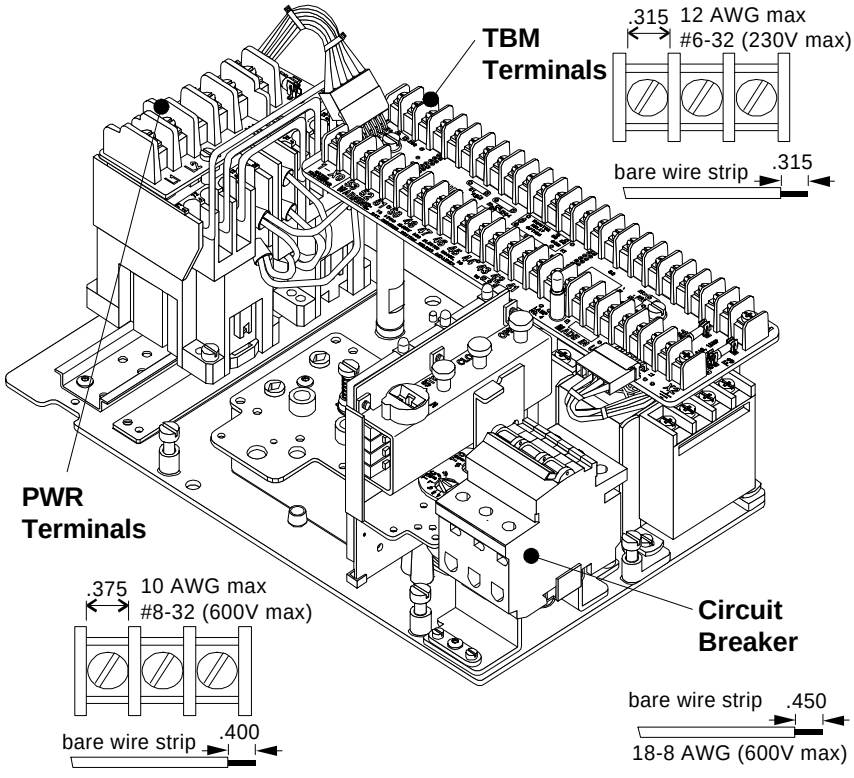

Electrical Hook-up

STEP 1. Move valve to mid-position by handwheel. This will allow sufficient time to stop actuator in case of improper hook-up or reversed incoming power voltage phases.

STEP 2. Identify a means of removing power from actuator during check out. Be sure no erroneous remote control signal can be received causing actuator to energize.

STEP 3. Energize Open control to check operation of contactor and pushbuttons. Open controls must move valve in Open direction. If valve Closes, actuator must be stopped and any (2) two power voltage leads reversed to correct voltage phasing.

CAUTION: If voltage is improperly phased, Torque and Position Limit Switches are not in circuit to protect valve.

STEP 4. Seal all field conduit entries in accordance with National Electric Code.

ASSEMBLY TO VALVES - Threaded Valve Stem

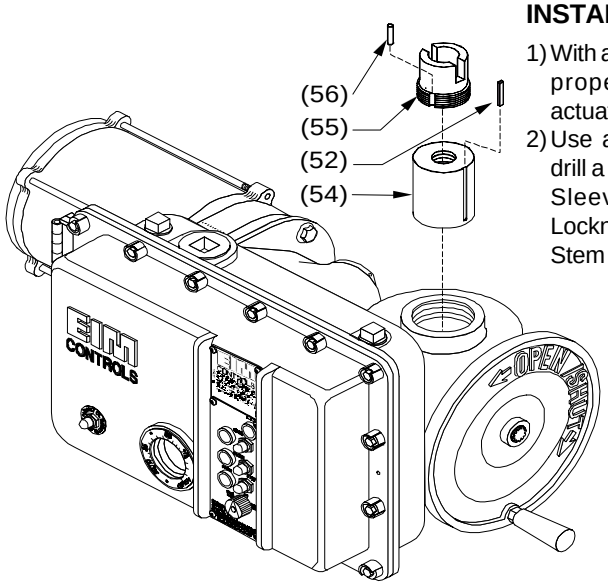

LOCKNUT LOCKPIN INSTALLATION

1) With actuator in place on valve, ensure proper flange mating and valve actuator orientation.
2) Use a number 30 (.1285) drill bit to drill a hole 3/4 inch deep into the Drive Sleeve assembly threads for the Locknut Lockpin (56) using groove in Stem Nut Locknut as drill guide.
3) Install Locknut Lockpin (56) into drilled hole to prevent Stem Nut Locknut from working loose and turning.

Note: When installing, the Locknut Lockpin - it should extend 1/4 inch above the Drive Sleeve assembly to allow for future removal.

STEM NUT INSTALLATION (MULTI-TURN)

1) Unscrew Locknut (55) holding Bronze Stem Nut (54) and remove the Stem Nut and Key (52).
2) Lubricate Stem and run Stem Nut down Stem to check acme thread fit, then remove Stem Nut and set aside.
3) Lower actuator over Stem onto valve flange. The screws thru valve flange into actuator must engage a minimum of one full screw diameter deep into bottom base and be tightened to a preload. See assembly drawing for screw size and torque to tighten properly.

MOUNTING SCREWS

If EIM supplied adaptation, the mounting screws are included. If adaptation to valve was the responsibility of others, the mounting screws *are not* furnished by EIM. Screws thru adapter MUST engage a minimum of one screw diameter deep into EIM actuator base.

4) Screw Stem Nut on Stem until it enters Drive Sleeve. Line (52) Key and (54) Drive Sleeve keyway and insert (52) Key.
5) Turn handwheel in Open direction, pulling Stem Nut into Drive Sleeve until it bottoms out (valve will begin to open).

CAUTION: LOCKNUT MUST BE TIGHT AGAINST STEM NUT.

6) Lower Locknut (55) over Valve Stem and screw into place firmly against top of Stem Nut. Tap Locknut ears using brass drift until tight.

THRUST SPOOL (Model 4000 & 5000)

1) Locate Thrust Mounting bolts.
2) Remove eight mounting bolts and separate Spool from actuator.
3) Position Spool over Valve Stem. Thread Spool onto Valve Stem until it meets valve plate.
4) Bolt and secure Spool onto valve.
5) Position actuator above Spool. Lower actuator onto Spool while manually rotating the unit until ears on Stem Nut and ears on main Drive Sleeve mesh.
6) Grease flange face before securing unit to Spool.
7) Re-install thrust plate mounting bolts. Tighten to proper torque.

NOTE: Reverse procedure if Stem Nut needs to be replaced. Actuator does not need to be returned to factory for this procedure.

(Quarter-Turn) SPLINE BUSHING

EIM removable Spline Bushing allows easy adaptation to valve shaft diameter and Key. Actuator may be rotated with respect to valve shaft for unexpected or awkward field installations.

1) Move valve to full Open or Close.
2) Place Spline Bushing on valve shaft with Key and tighten set screw.
3) Using handwheel on actuator, move gear position indicator arrow to full Open or Close (the position in Step 1)
4) Position actuator so Spline Bore is correctly aligned with the Spline Bushing on stem shaft.
5) Move actuator onto shaft until flange faces properly mate. Secure with screws thru the adapter flange into base of actuator.

Quarter-Turn Valve

STOP SETTING PROCEDURE

Built-in mechanical stops are provided to prevent handwheel operation beyond total valve travel (90 ± 6°). End of travel stops are independently adjusted, locked in place and sealed.

Type P, Q & R
(top mount)

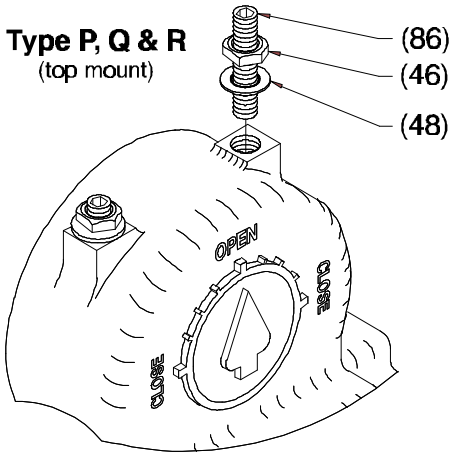

Loosen both Locknuts (46) and back out two Stopbolts (86) to allow valve to close and open fully. Insure Electrical Travel Limit Switches have been adjusted (see pg. 4).

1) Run actuator electrically to full Close.
2) Screw Close (86) Stopbolt in until it seats, then back off 1/2 turn. Install (48) Washer and tighten (46) Locknut.
3) Run actuator electrically to full Open.
4) Screw Open (86) Stopbolt in until it seats, then back off 1/2 turn. Install (48) Washer and tighten (46) Locknut.

Type M/MG
(side mount)

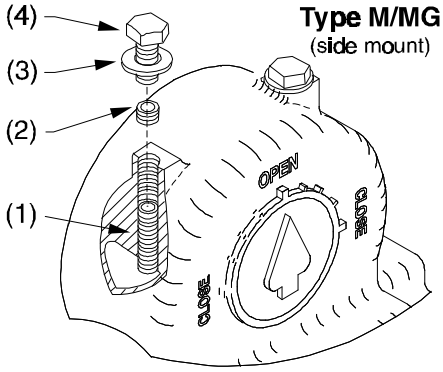

Back out two Stopbolts (1) to allow valve to close and open fully. Set Travel Limit Switches (see pg. 4).

1) Run actuator electrically to full Close.
2) Screw Close (1) Stopbolt in until it seats, then back off 1/2 turn. Tighten (2) Lockscrew.
3) Run actuator electrically to full Open.
4) Screw Open (1) Stopbolt in until it seats; back off 1/2 turn. Tighten Locknut.
5) Install (3) & (4) Seal Washer & Screw.

CAUTION: Do not set actuator position Limit Switches to drive into mechanical stops. Damage can occur if unit is repeatedly stalled into end stops.

LIMIT SWITCH SETTING INSTRUCTIONS

BEFORE MAKING LIMIT SWITCH SETTING:

1. Move valve to mid-position (use handwheel).
2. Phase the power (motor) voltage and make sure that open contactor moves valve Open and close contactor moves valve Closed.

DANGER: Improper power voltage phasing eliminates protection of both position limit switch and torque switches, risking valve damage.

TO SET OPEN LIMIT SWITCH (LSO)

1. **Open valve** during handwheel operation note rotation direction of screwdriver (fig. 1) in LSO Adjusting Shaft. After valve is fully Open, Close it three handwheel turns to allow for coasting when motor is actuated.
2. **Disengage spring loaded gear:** Push Disengage Shaft in (fig. 2a) down, then rotate 90° so shaft is captured down. This will disengage limit switch gears from spring loaded drive gear.

TIP: many turns may be required to set limit switches; it may be convenient to use a reversible variable speed drill to rotate the adjusting shafts instead of a screwdriver.

3. **Line up LSO indicator:** If switch rotor arrow does not line with round holes (within ± 15°) on plate as shown in fig. 3a, rotate screwdriver in same direction noted in Step 1 until switch just rotates. If arrows line up as shown in fig. 3b, rotate screwdriver in the opposite direction until switch just rotates.
4. **Re-engage** the spring-loaded drive gear by rotating disengage shaft in fig. 2a. Spring loaded disengage shaft will rise.
5. **IMPORTANT: to insure limit switch gears have re-engaged properly with spring loaded drive gear, firmly *"jiggle"* (rotate) all adjusting shafts with screwdriver back and forth. Proper engagement has been made if all shafts (LSC, LSO, LSA & LSB) will not turn with screwdriver.**

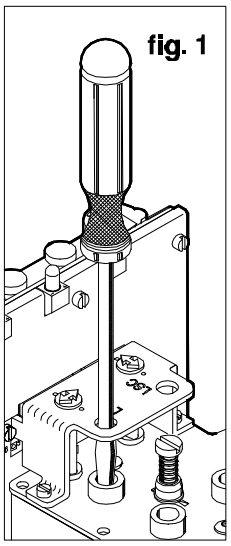

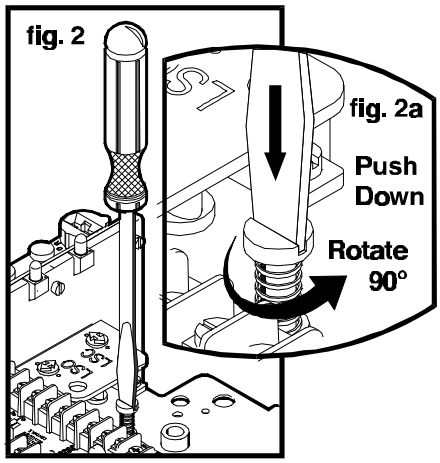

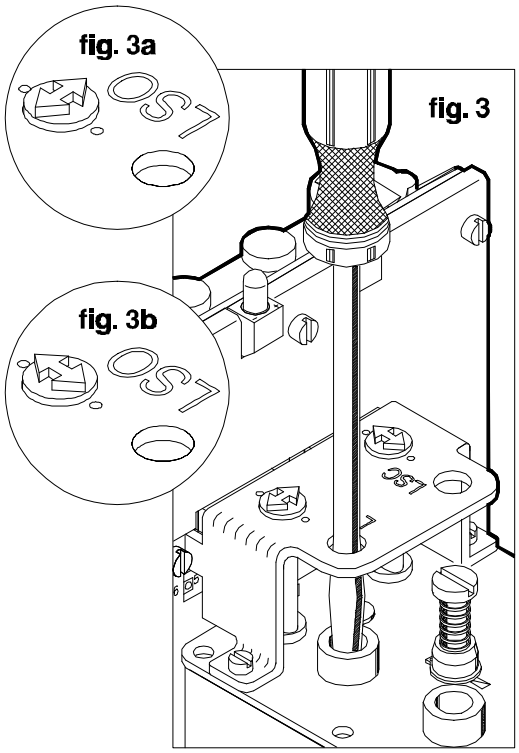

SET (LSC) CLOSE LIMIT SWITCH

1. **Close valve**, using handwheel. During handwheel operation note rotation direction of screwdriver in LSC adjusting shaft. After valve is fully Closed, Open it three handwheel turns to allow for coast.
2. Repeat steps 2 through 5 of LSO setting instructions with screwdriver in LSC cavity.

Important: *"jiggle"* adjusting shafts.

TO SET INTERMEDIATE SWITCH (LSA OR LSB), if included.

1. Open Valve to desired position, then repeat steps 2 thru 5 of LSO.

Important: *"jiggle"* adjusting shafts.

TORQUE SEATED VALVES

If valve is a torque seated valve, and the geared limit contacts are used for indication only, the LSC switch should be set several handwheel turns ahead of torque switch contact action. This gives proper valve position Lamp indication in spite of minor position variations which might occur due to torque seating.

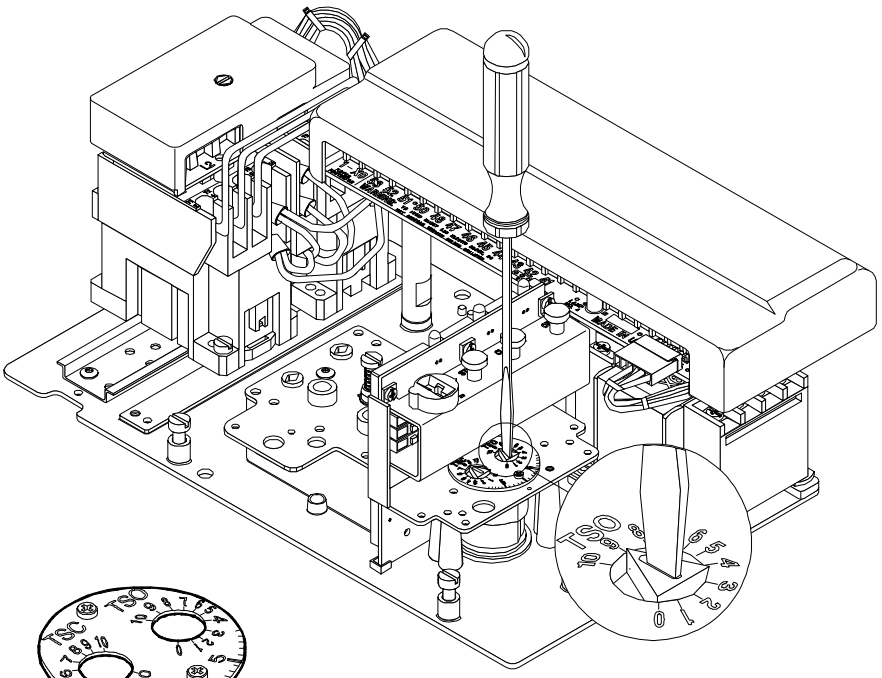

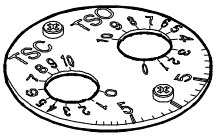

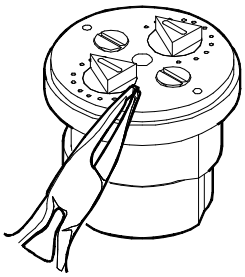

Torque Switch Rotation Limit

Adjustment rotation may be limited, Remove dial to expose anti-rotation pins. Remove pins from position 10 and insert into the desired hole.

TORQUE SWITCH CALIBRATION
To set Close Torque Switch (TSC)

a) Close valve using handwheel. Set valve to the desired torque. Observe rotating dial for number that corresponds to desired Close Torque.

b) Insert screwdriver in TSC slot. Press down to disengage and turn arrow to setting determined in a). Release at this point and it will re-engage and remain set.

c) Back the valve away from Close position and reseat by handwheel to verify torque trip point is at desired setting. The trip point of switch is a distinctive click as it breaks contact.

d) **DANGER:**

REVERSE POWER VOLTAGE PHAS ING REMOVES TORQUE SWITCH PROTECTION FROM THE REVERSING CONTACTOR COIL CIRCUITS. VALVE DAMAGE COULD OCCUR. If phasing has not been checked, do so before proceeding. Back valve away from Close position with handwheel and test torque electrically, using Close controls. Readjust as required.

To Set Open Torque Switch (TSO)

a) Follow procedure as for TSC at TSO dial.

Multi-turn Actuators

Multi-turn top-mounted and side-mount bevel gear actuators require use of Gear Reduction Assembly part no. 84055-0000 for Mechanical Dial Position Indication MDPI *and* 1-turn Pot. N-number replaces -0000 to complete part no. For 1-turn Pot only *without* Dial Indication part no. is 84117-0000. Refer to EIM JOB SPEC SHEET for MDPI furnished.

MDPI *Mechanical Dial Position Indication* is a gear reduction assembly to convert multi-turn valve stem nut turns to 270 degrees (.75 turn) for viewing position indication arrow thru glass window on actuator electric switch compartment cover. Point of rotation reference has been designated as **N-number**. N is the total number of electric actuator 12-tooth gear limit spring-load pinion rotations for full valve stroke.

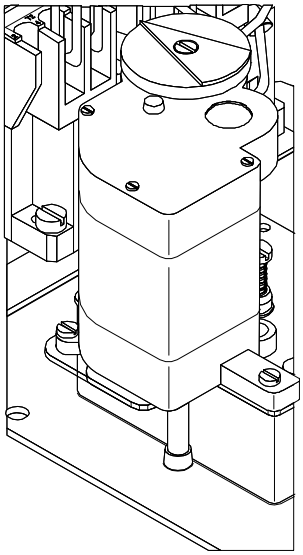

Calibration

MDPI & POT Drive is calibrated after LSC and LSO are properly set (Pg. 4). Move valve to Close position. Manually rotate MDPI arrow to indicate Close. Calibration is now complete. Open valve to check that MDPI arrow goes to Open, indicating that N is correct for full valve travel. Potentiometer, if included, has been calibrated. Mechanical dial travel is 270°. Approximately 5% of total Pot resistance is left on each end for total valve travel.

Quarter-Turn Model P, Q, R & M

Top-mount P, Q and R and several models of M/MG's side-mount do not require MDPI gear reduction assembly for 1-turn Pot. If multi-turn Pot is required, EIM JOB SPEC SHEET will list 84131-0000 or the correct assembly. Spec Sheet will list,(1) Pot clutch gear, (2) Pot input gear and (3) potentiometer.

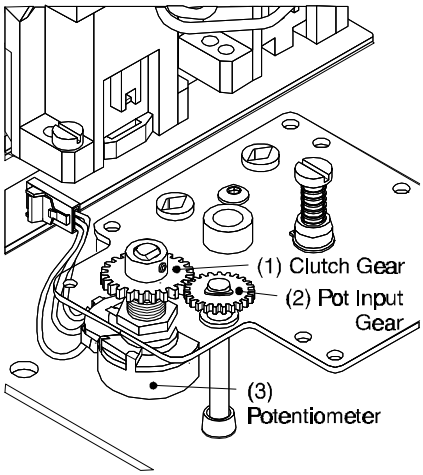

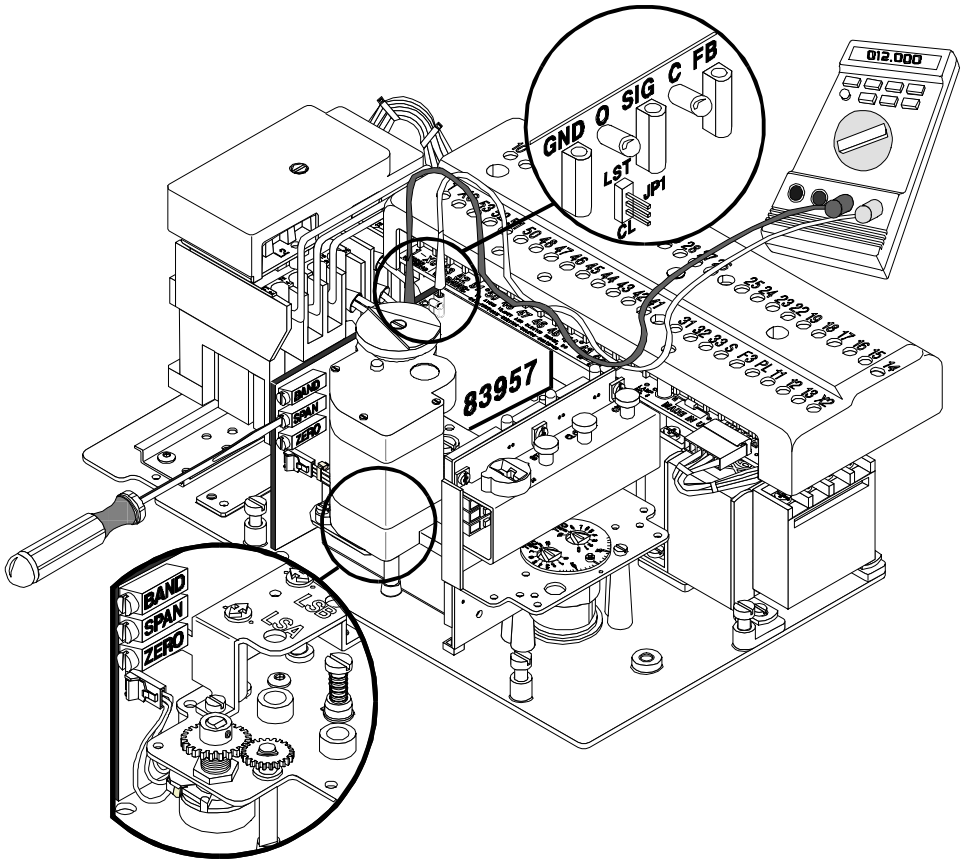

Futronic II 83957

83957-1 (600 starts per hour maximum) or 83957-2 (100 starts per hour) module controls valve by comparing two inputs (the desired position from process controller or computer and actual valve feedback position). If the two are within BAND, valve will not move. When the setpoint moves outside the BAND, valve moves in the direction to make control signal and valve feedback position inputs balance.

Calibration

After field wiring is complete, position limit switches have been set (Pg 4) and Pot adjustment on (Pg 5); proceed.

1. Voltmeter probes (+) in *Red* **(FB)** test point and (-) in *Black* **(GND)** test point.
2. Close valve: Meter should read **1 volt DC.** If it does not adjust **ZERO.**
3. Open valve: Meter should read **5 volts DC.** If it does not adjust **SPAN.**
4. Repeat steps 2 and 3 until no re-adjustment is necessary.
5. After a command signal has been connected, adjust **BAND** so valve moves to desired setpoint. **Delay:** 83957-1 has a six (6)* second fixed delay preventing actuator from instantaneously responding to another signal. This allows reversing contactor to respond at 600 starts per hour maximum.

Note: Jumper **JP1** is factory set: See Job Spec Sheet for **JPI** position. Loss of 4-20 mA control signal will cause valve to (1) **LST** (last position will not move) or 2) **CL** valve will close. **JPI** jumper plug may be field changed.

TIP: To measure **BAND**, place Voltmeter (-) Probe in ***Green*** (SIG) test point and (+) probe in ***Red*** (FB) test point. Move valve using Handwheel. Observe reading when valve repositions. (**BAND** adjustment is ±1% to 7%.)

***** 83957-2 has a thirty (30) second delay for 100 starts per hour maximum.

Note 1) Feedback Pot may be mounted on MDPI (Multi-turn valves) or mounted on gear cover (1/4 Turn valves).

M2CP WIRING DIAGRAM SYMBOLS

Refer to EIM JOB SPEC SHEET and EIM WIRING DIAGRAM for components furnished.

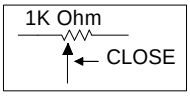

POTENTIOMETER
Potentiometer slider is geared to Valve Position and "in-step" at all times

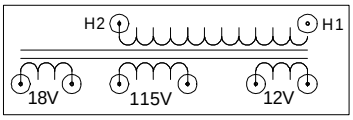

TRANSFORMER
Outputs: 120, 12 and 18Vac

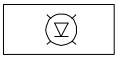

PILOT LAMPS - LED INDICATORS
Actuated by position limit switches

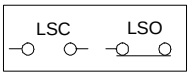

POSITION LIMIT SWITCH
LSC shows open. LSO shown made.

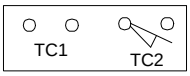

TORQUE LIMIT SWITCHES
N.C. Double Break Contacts Open when overload occurs. N.O. contacts make.

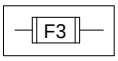

FUSE

PUSHBUTTONS N.C.
Momentary N.C. Contact

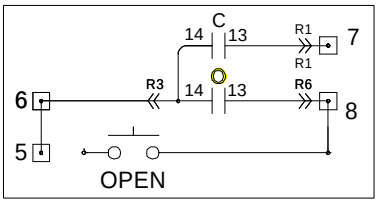

PUSHBUTTONS N.O.
Momentary N.O. contacts connects control voltage to reversing contactor coils. Seal-in contacts C and O (14,13) on contactor allow travel without continued holding down of pushbutton.

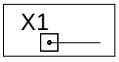

TERMINAL POINTS
Factory wired by EIM

CIRCUIT PLUG & RECEPTACLE

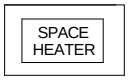

SPACE HEATER
Heater in Switch Compartment is standard

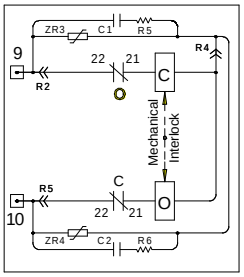

REVERSING CONTACTOR
Showing Open and Close coils, Mechanical Interlock, and Electrical Interlock Contacts O (21, 22) & C (21, 22)

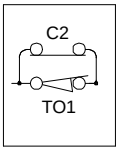

NUISANCE TRIP
To prevent (TSO) contact tripping when valve has been jammed closed - LSC contact allows valve to open slightly. Contact then open, ensuring torque protection for remaining travel

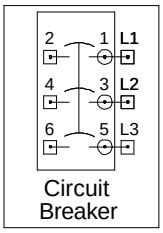

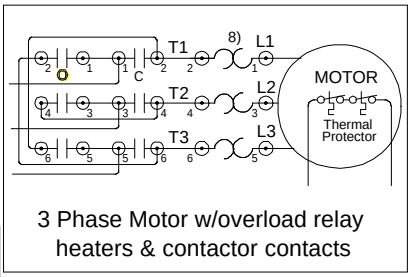

3 Phase Motor w/overload relay heaters & contactor contacts

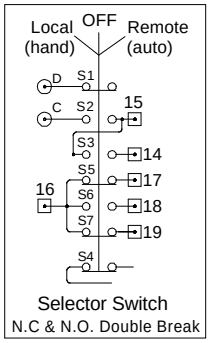

SS Table

	Hand	Off	Auto
S1	X	O	O
S2	O	O	X
S3	O	X	X
S4	X	X	O
S5	X	O	O
S6	O	O	X
S7	X	X	O

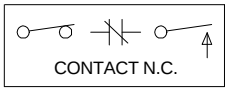

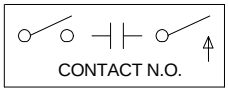

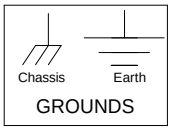

TROUBLE SHOOTING

SYMPTOM	PROBABLE CAUSE	CORRECTIVE ACTION
Motor will not Run	Blown Control Fuse	Check Fuse and Replace as necessary
	Open in Control Circuit	Refer to appropriate wiring diagram and check for continuity
	Insulation Resistance Breakdown in Motor	Perform Megger Test
No Power available to Actuator	Tripped Circuit Breaker	Reset Circuit Breaker
Handwheel Hard to Turn	Valve Stem improperly Lubricated	Lubricate with Grease
	Actuator Lubrication has broken down	Clean out old grease and replace with recommended lubricant
	Valve packing gland too tight	Loosen packing gland nuts as necessary
	Drive Sleeve Bearing Failure	Replace Bearing
	Jammed Valve	Refer to Valve Maintenance
Valve only opens or closes partially with motor	Torque Switch Setting too low	Check Setting and Reset if necessary
	Limit Switch Improperly Set	Check Switch Actuation and recalibrate if necessary
Torque switch is properly set, but actuator Torque's out in mid-travel, open or closed direction	Damaged or bent valve stem	Refer to Valve Maintenance
	Valve packing too tight	Refer to Valve Maintenance
	Jammed Valve (obstruction in line)	Refer to Valve Maintenance
Handwheel will not operate valve	Handwheel shaft bearing assembly malfunction	Repair or replace as necessary
	Sheared gear key or Stripped Gearing	Replace as necessary
	PS Shifter Position or Malfunction	Replace Gear(s)
	Broken Handwheel Shaft	Repair or replace as necessary
	Broken Valve Stem or Stripped Stem Nut	Repair or replace as necessary
Motor runs but will not operate the valve	Motor Bearing Assembly Malfunction	Repair or replace as necessary
	Sheared gear key (fastener pin)	Replace
	Stripped Gearing	Replace
	Broken Valve Stem or Stripped Stem Nut	Repair or replace as necessary
	PS shifter position or malfunction	Replace PS Assembly
Moisture in Electrical Enclosure	Leakage through Conduit Entry	Install an approved Seal-off or re-route conduit to enter Enclosure from the bottom of enclosure
	Electrical Enclosure is not properly sealed	Inspect and replace O-ring if necessary
	Space Heater Inoperable	Check Circuit continuity for Heater
Gear (Oil) in Electrical Enclosures	Pressure Relief Fitting not installed	Install Pressure Relief Fitting
	Bad Seal on T/L or G/L Assembly	Replace Stat-O-Seals or O-Rings
		Rotate Actuator Mounting

COUNTRY LANE 2.0 MG
ELEVATED STORAGE TANK

CITY OF ROCKWALL, TEXAS

SPECIFICATION SECTION: TS1 & TS4

OPERATIONS & MAINTENANCE MANUAL

ELECTRICAL AND INSTRUMENTATION

TABLE OF CONTENTS:

1. **LIGHTING**
2. **PRESSURE TRANSMITTER**
3. **CHLORINE ANALYZER**
4. **FIRE ALARM SYSTEM**
5. **SCADA**
6. **SLIDE GATE OPERATOR**

SUPPLIER / SUBCONTRACTOR

MULTIPLE – SEE ATTACHED

GENERAL CONTRACTOR

LANDMARK STRUCTURES I, LP
1665 HARMON ROAD
FORT WORTH, TEXAS 76177
(817) 439-8888

LIGHTING

TABLE OF CONTENTS:

A. TYPE A – COOPER – VAPORGARD INCANDESCENT LUMINAIRE
B. TYPE B – COOPER – VAPORGARD INCANDESCENT LUMINAIRE
C. TYPE C – CROUSE HINDS – VAW OBSTRUCTION LIGHT
D. TYPE D – HUBBELL – PERIMALITER WALLPACK
E. TYPE E – HUBBELL – N4X SERIES I
F. TYPE F – HUBBELL – SUPERWATT 3D LIGHTING
G. TYPE G – COOPER – VAPORGARD INCANDESCENT LUMINAIRE
H. TYPE H – GARDCO – 111 MINI SCONCE
I. TYPE I – HOLOPHANE – ANGLED WRAPAROUND
J. TYPE J – HOLOPHANE – SPECIFICATION GRADE WRAPAROUND
K. TYPE K – SPAULDING – MAGNUSPEC
L. TYPE L – BEGA – FLOODLIGHTS
M. TYPE M – SPAULDING - MAGNUSPEC

SUBCONTRACTOR / SUPPLIER
HARRELL & ASSOCIATES, INC.
CONTACT: DAVE HARRELL
POST OFFICE BOX 43068
FORT WORTH, TEXAS 76140
(817) 483-7582

VAPORGARD™ Incandescent Luminaires

Enclosed and Gasketed

Cl. I, Div. 2, Groups A,B,C,D
Wet Locations
NEMA 3,3R

TYPE A

Pendant Mount - VDA Series

Hub Size	Series	Max Lamp Size	Complete Cat.# with globe/guard	Luminaire Components Catalog Nos. Pendant Body	Globe	Guard
½″	150	150 watt	VDA15GP✓	VDA15✓	G54✓	P50✓
¾″	150	A-21	VDA25GP✓	VDA25✓	G54✓	P50✓
1″	150		VDA35GP✓	VDA35✓	G54✓	P50✓
½″	200	200 watt	VDA12GP✓	VDA12✓	G24✓	P21✓
¾″	200	A-23	VDA22GP✓	VDA22✓	G24✓	P21✓
1″	200		VDA32GP✓	VDA32✓	G24✓	P21✓
½″	300	300 watt	VDA13GP✓	VDA13✓	G34/G251✓	P22✓
¾″	300	PS-25 & PS-30	VDA23GP✓	VDA23✓	G34/G251✓	P22✓
1″	300		VDA33GP✓	VDA33✓	G34/G251✓	P22✓

Thru-Feed - VDC Series

Hub Size	Series	Max Lamp Size	Complete Cat.# with globe/guard	Thru Feed Body	Globe	Guard
½″	150	150 watt	VDC15GP✓	VDC15✓	G54✓	P50✓
¾″	150	A-21	VDC25GP✓	VDC25✓	G54✓	P50✓
½″	200	200 watt	VDC12GP✓	VDC12✓	G24✓	P21✓
¾″	200	A-23	VDC22GP✓	VDC22✓	G24✓	P21✓
½″	300	300 watt	VDC13GP✓	VDC13✓	G34/G251✓	P22✓
¾″	300	PS-25 & PS-30	VDC23GP✓	VDC23✓	G34/G251✓	P22✓

Ceiling Mount for Recessed 4″ Round Box - VXH Series

Hub Size	Series	Max Lamp Size	Complete Cat.# with globe/guard	Lamp Socket Body	Globe	Guard
½″	150	150 watt A-21	VXH15GP✓	VXH15✓	G54✓	P50✓
½″	200	200 watt A-23	VXH12GP✓	VXH12✓	G24✓	P21✓
½″	300	300 watt PS-25 & PS-30	VXH13GP✓	VXH13✓	G34/G251✓	P22✓

Ceiling Mount with Junction Box - VXHF Series

Hub Size	Series	Max Lamp Size	Complete Cat.# with globe/guard	Lamp Socket Body	Globe	Guard	Junction Box
½″	150	150 watt	VXHF15GP✓	VXH15✓	G54✓	P50✓	VXF10✓
¾″	150	A-21	VXHF25GP✓	VXH15✓	G54✓	P50✓	VXF20✓
½″	200	200 watt	VXHF12GP✓	VXH12✓	G24✓	P21✓	VXF10✓
¾″	200	A-23	VXHF22GP✓	VXH12✓	G24✓	P21✓	VXF20✓
½″	300	300 watt	VXHF23GP✓	VXH13✓	G54/G251✓	P22✓	VXF20✓
¾″	300	PS-25 & PS-30	VXHF23GP✓	VXH13✓	G34/G251✓	P22✓	VXF20✓

✓ – available with Lightning Service™
See Section G for complete details

Copyright© 2002 Cooper Industries, Inc.

COOPER Crouse-Hinds

VAPORGARD® SERIES LIGHTING FIXTURES

Installation & Maintenance Information

COOPER Crouse-Hinds

IF 101

SAVE THESE INSTRUCTIONS FOR FUTURE REFERENCE

APPLICATION

Vaporgard® Series incandescent clear globe lighting fixtures and fluorescent clear and color globe lighting fixtures are suitable for use in the following hazardous (classified) areas as defined by the National Electrical Code (NEC®) and Canadian Electrical Code (CEC):

- Class I Division 2 Groups A, B, C, D; Class I Zone 2 IIC

This hazardous area suitability applies to vertically mounted fixtures only. **Stanchion mount is suitable for non-hazardous locations only.**

Refer to the fixture nameplate for specific classification information, maximum ambient temperature suitability and corresponding operating temperature (T-numbers).

Vaporgard lighting fixture NEMA/TYPE 3 enclosures are designed for use indoors and outdoors in wet locations, where moisture, dirt, corrosion, vibration and rough usage may be present.

Vaporgard incandescent lighting fixtures are suitable for use on supply voltages to 120V, wiring in accordance with National Electrical Code requirements for medium base lampholders. For applications on 220V nominal systems, suffix /250 indicates that the fixtures are suitable for 250V maximum. Maximum wattage is 300W.

Vaporgard fluorescent (VF series) lighting fixtures are suitable for use on a supply voltage of 120V 60HZ (220V 50hz with suffix /220 50) and with light sources of 5, 7 or 9 watt.

⚠ WARNING

To avoid the risk of fire, explosion or electric shock, this product should be installed, inspected, and maintained by a qualified electrician only, in accordance with all applicable electrical codes.

⚠ WARNING

To avoid electric shock:

- Be certain electrical power is OFF before and during installation and maintenance.
- Fixture must be supplied by a wiring system with an equipment grounding conductor.

To avoid explosion and failure:

- Do not install where the marked operating temperatures exceed the ignition temperature of the hazardous atmospheres.
- Do not operate in ambient temperatures above those indicated on the fixture nameplate.
- Install stanchion mount fixtures in non-hazardous locations only. Stanchion mount Vaporgard lighting is not suitable for hazardous (classified) locations.
- Fixture must be installed with lamp base up, in the vertical position only.
- Make sure supply voltage meets the fixture nameplate voltage requirements.
- Use only the lamp type and wattage specified on the fixture nameplate.
- Use proper supply wiring as specified on the fixture nameplate.
- All gasket seals must be clean.
- Before opening, electrical power to the fixture must be turned off. Keep tightly closed when in operation.

To avoid burning hands:

- Make sure globe and lamp are cool when performing maintenance.

INSTALLATION

(Refer to Diagram A for proper component selection)

MOUNTING

1. Secure the fixture body (mounting module) in its support position – pendant, through feed, ceiling, wall, or stanchion, following methods that comply with the NEC, CEC and any local codes.
2. For pendant and stanchion mount, tighten set screw located in the conduit hub.

WIRING

1. Pendant and through feed fixture bodies are supplied complete with lampholder.
2. Ceiling, wall and stanchion fixture bodies require adding the VXH (VFH for fluorescent) series box mounting body which contains the lampholder.
3. To attach the VXH/VFH (see Figure 1):

- Loosen the two screws on the fixture body.
- Slip the keyhole slots of the VXH/VFH over these two screws. Twist the VXH/VFH clockwise to lock.in place.
- Tighten the two screws.

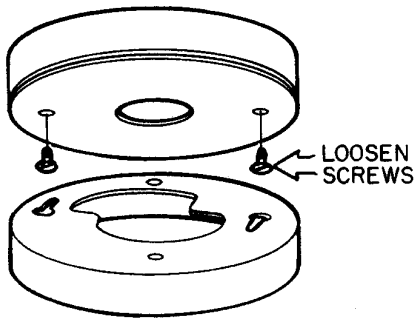

Figure 1

Copyright © 2002, Cooper Industries, Inc.

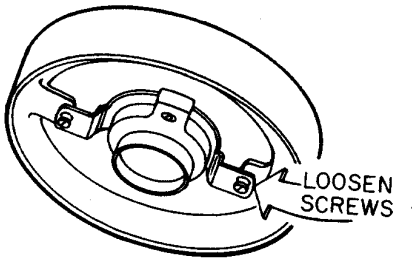

Figure 2

4. Connect supply wires to Vaporgard terminals or wire leads using methods that comply with NEC, CEC and any local codes.
5. Reinstall lampholder and mounting bracket assembly (reverse order of step 4). Make sure all wires are safely above the assembly before tightening the two screws.
6. Install lamp. See LAMP INSTALLATION AND REPLACEMENT section.
7. For fixtures with globe only (less guard), thread globe into fixture body. Hand tighten securely.
8. For fixtures with globe and guard, install as follows:

- 150W max. Incandescent Vaporgard fixture uses an integral guard cat.no. P50. 200W max. Incandescent and Fluorescent Vaporgard fixtures use an integral guard cat.no. P21. Thread segments of both guard and globe are of unequal length (keyed) to insure proper globe and guard thread match upon assembly. The clips that are attached to the guard help secure the guard to the globe. To assemble, align correctly, then push globe and guard together. Thread globe and guard assembly as a unit into the fixture body. Hand tighten securely (see Figure 3).
- 300W max. Incandescent fixture requires a different globe (G251) when the guard cat.no. P22 is used. The guard contains a threaded adapter that holds the globe in place.

  Place the globe inside the guard and thread the guard into the fixture body. Hand tighten securely.

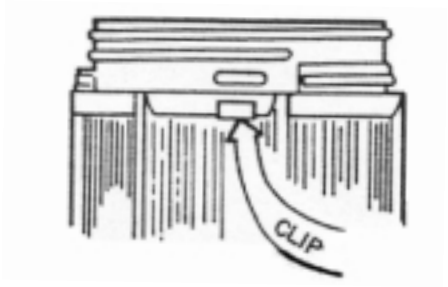

Figure 3

9. Turn power on.

REFLECTOR INSTALLATION

(See Figure 4)

1. Loosen three (3) screws on the reflector.
2. Place reflector on fixture body flange.
3. Securely tighten the three screws.

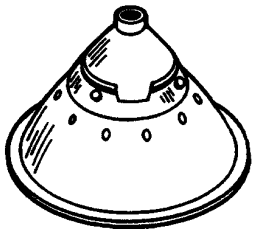

Figure 4

LAMP INSTALLATION AND REPLACEMENT

1. Disconnect power to fixture and allow to cool completely.
2. Unscrew completely the globe (or globe with guard) and set aside.
3. Remove lamp.
4. Perform cleaning and inspection as noted in the MAINTENANCE section.
5. Install the new lamp into lampholder. New lamp must be the identical type as marked on fixture nameplate.

⚠ CAUTION

- To avoid shortened lamp life, lampholder failure, wiring faults or ballast failure tighten or plug in lamp firmly and completely.
- To avoid injury, guard against lamp breakage.

6. Thread globe (or globe with guard) in fixture body and hand tighten securely.

Copyright © 2002, Cooper Industries, Inc.

MAINTENANCE

1. Perform visual, electrical and mechanical inspections on a regular basis. The environment and frequency of use should determine this. However it is recommended that checks be made at least once a year. We recommend an Electrical Preventive Maintenance Program as described in the National Fire Protection Association Bulletin NFPA 70B: Recommended Practice for Electrical Equipment Maintenance (www.nfpa.org).
2. The globe, reflector and guard should be cleaned periodically to insure continued lighting performance. To clean, wipe the reflector, then the guard and globe with a clean damp cloth. If this is not sufficient, use a mild soap or a liquid cleaner such as Collinite NCF or Duco #7. Do not use an abrasive, strong alkaline, or acid cleaner. Damage may result.
3. Visually check for undue heating evidenced by discoloration of wires or other components, damaged parts, or leakage evidenced by water or corrosion in the interior. Replace all worn, damaged or malfunctioning components and clean gasket seals before putting the fixture back into service.
4. Electrically check to make sure that all connections are clean and tight.
5. Mechanically check that all parts are properly assembled.

UL FIXTURE FITTING
VAPORGARD INCANDESCENT AND FLUORESCENT LIGHTING FIXTURE
(Diagram A)

INCANDESCENT LIGHTING FIXTURES

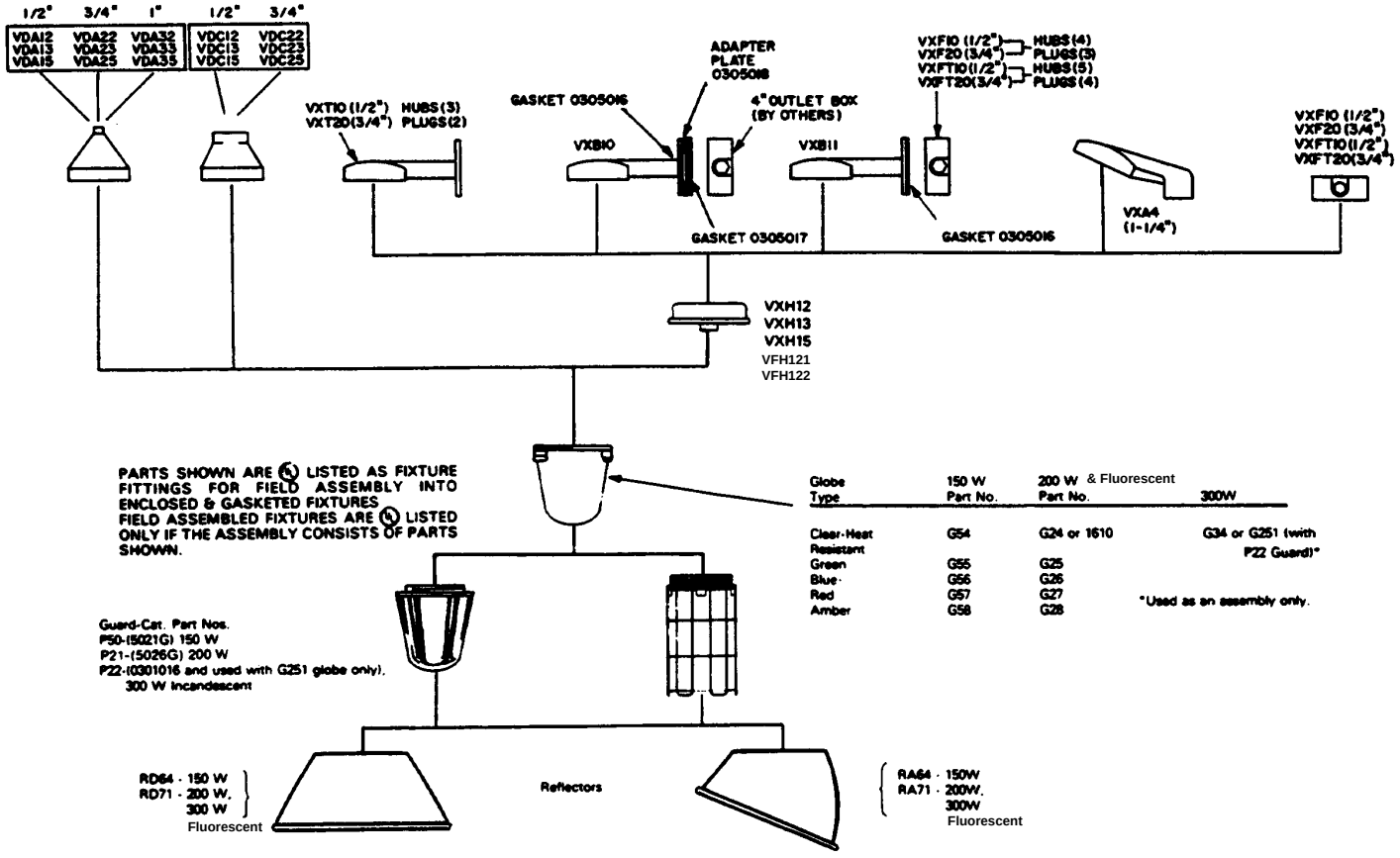

Copyright © 2002, Cooper Industries, Inc.

All statements, technical information and recommendations contained herein are based on information and tests we believe to be reliable. The accuracy or completeness thereof are not guaranteed. In accordance with Crouse-Hinds "Terms and Conditions of Sale", and since conditions of use are outside our control, the purchaser should determine the suitability of the product for his intended use and assumes all risk and liability whatsoever in connection therewith.

COOPER Crouse-Hinds

Cooper Industries Inc.
Crouse-Hinds Division
PO Box 4999, Syracuse, New York 13221 • U.S.A.
Copyright© 2002, Cooper Industries, Inc.

IF 101
Revision 3
Revised 03/02
Supercedes 01/01

VAPORGARD™ Incandescent Luminaires

Enclosed and Gasketed

Cl. I, Div. 2, Groups A,B,C,D
Wet Locations
NEMA 3,3R

TYPE B

Wall Mount - VXHT Series

Hub Size	Series	Max Lamp Size	Complete Cat.# with globe/guard	Wall Bracket Mounting Module	Body	Globe	Guard
½″	150	150 watt	VXHT15GP✓	VXT10✓	VXH15✓	G54✓	P50✓
¾″	150	A-21	VXHT25GP✓	VXT20✓	VXH15✓	G54✓	P50✓
½″	200	200 watt	VXHT12GP✓	VXT10✓	VXH12✓	G24✓	P21✓
¾″	200	A-23	VXHT22GP✓	VXT20✓	VXH12✓	G24✓	P21✓
½″	300	300 watt	VXHT13GP✓	VXT10✓	VXH13✓	G34/G251✓	P22✓
¾″	300	PS-25 & PS-30	VXHT23GP✓	VXT20✓	VXH13✓	G34/G251✓	P22✓

Wall Mount - Adapter Kit

Mounts wall mount VXHT Series to a 4″ Round Box. Cat. No. VXT-K1

Wall Mount with Junction Box VXHBF Series

Hub Size	Series	Max Lamp Size	Complete Cat.# with globe/guard	Wall Bracket Mounting Module	Body	Globe	Guard	Junction Box
½″	150	150 watt	VXHBF15GP✓	VXT10✓	VXH15✓	G54✓	P50✓	VXF10✓
¾″	150	A-21	VXHBF25GP✓	VXT20✓	VXH15✓	G54✓	P50✓	VXF20✓
½″	200	200 watt	VXHBF12GP✓	VXT10✓	VXH12✓	G24✓	P21✓	VXF10✓
¾″	200	A-23	VXHBF22GP✓	VXT20✓	VXH12✓	G24✓	P21✓	VXF20✓
½″	300	300 watt	VXHBF13GP✓	VXT10✓	VXH13✓	G34/G251✓	P22✓	VXF10✓
¾″	300	PS-25 & PS-30	VXHBF23GP✓	VXT20✓	VXH13✓	G34/G251✓	P22✓	VXF20✓

Stanchion Mount - VXHA Series

Hub Size	Series	Max Lamp Size	Complete Cat.# with globe/guard	Stanchion Mounting Module	Body	Globe	Guard
1 ¼″		150 watt A-21	VXHA45GP✓	VXA4✓	VXH15✓	G54✓	P50✓
1 ¼″		200 watt A-23	VXHA42GP✓	VXA4✓	VXH12✓	G24✓	P21✓
1 ¼″		300 watt PS-25 & PS-30	VXHA43GP✓	VXA4✓	VXH13✓	G34/G251✓	P22✓

Luminaire Components Catalog Nos.

✓ – available with Lightning Service™
See Section G for complete details

Copyright© 2002 Cooper Industries, Inc.

VAPORGARD® SERIES LIGHTING FIXTURES

Installation & Maintenance Information

COOPER Crouse-Hinds

IF 101

SAVE THESE INSTRUCTIONS FOR FUTURE REFERENCE

APPLICATION

Vaporgard® Series incandescent clear globe lighting fixtures and fluorescent clear and color globe lighting fixtures are suitable for use in the following hazardous (classified) areas as defined by the National Electrical Code (NEC®) and Canadian Electrical Code (CEC):

- Class I Division 2 Groups A, B, C, D; Class I Zone 2 IIC

This hazardous area suitability applies to vertically mounted fixtures only. **Stanchion mount is suitable for non-hazardous locations only.**

Refer to the fixture nameplate for specific classification information, maximum ambient temperature suitability and corresponding operating temperature (T-numbers).

Vaporgard lighting fixture NEMA/TYPE 3 enclosures are designed for use indoors and outdoors in wet locations, where moisture, dirt, corrosion, vibration and rough usage may be present.

Vaporgard incandescent lighting fixtures are suitable for use on supply voltages to 120V, wiring in accordance with National Electrical Code requirements for medium base lampholders. For applications on 220V nominal systems, suffix /250 indicates that the fixtures are suitable for 250V maximum. Maximum wattage is 300W.

Vaporgard fluorescent (VF series) lighting fixtures are suitable for use on a supply voltage of 120V 60HZ (220V 50hz with suffix /220 50) and with light sources of 5, 7 or 9 watt.

⚠ WARNING

To avoid the risk of fire, explosion or electric shock, this product should be installed, inspected, and maintained by a qualified electrician only, in accordance with all applicable electrical codes.

⚠ WARNING

To avoid electric shock:

- Be certain electrical power is OFF before and during installation and maintenance.
- Fixture must be supplied by a wiring system with an equipment grounding conductor.

To avoid explosion and failure:

- Do not install where the marked operating temperatures exceed the ignition temperature of the hazardous atmospheres.
- Do not operate in ambient temperatures above those indicated on the fixture nameplate.
- Install stanchion mount fixtures in non-hazardous locations only. Stanchion mount Vaporgard lighting is not suitable for hazardous (classified) locations.
- Fixture must be installed with lamp base up, in the vertical position only.
- Make sure supply voltage meets the fixture nameplate voltage requirements.
- Use only the lamp type and wattage specified on the fixture nameplate.
- Use proper supply wiring as specified on the fixture nameplate.
- All gasket seals must be clean.
- Before opening, electrical power to the fixture must be turned off. Keep tightly closed when in operation.

To avoid burning hands:

- Make sure globe and lamp are cool when performing maintenance.

INSTALLATION

(Refer to Diagram A for proper component selection)

MOUNTING

1. Secure the fixture body (mounting module) in its support position – pendant, through feed, ceiling, wall, or stanchion, following methods that comply with the NEC, CEC and any local codes.
2. For pendant and stanchion mount, tighten set screw located in the conduit hub.

WIRING

1. Pendant and through feed fixture bodies are supplied complete with lampholder.
2. Ceiling, wall and stanchion fixture bodies require adding the VXH (VFH for fluorescent) series box mounting body which contains the lampholder.
3. To attach the VXH/VFH (see Figure 1):

- Loosen the two screws on the fixture body.
- Slip the keyhole slots of the VXH/VFH over these two screws. Twist the VXH/VFH clockwise to lock.in place.
- Tighten the two screws.

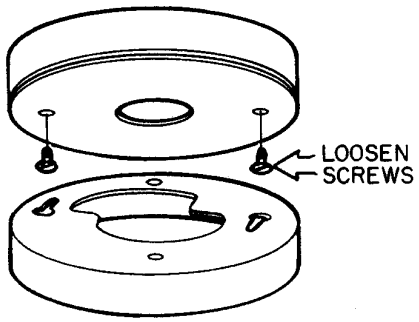

Figure 1

Copyright © 2002, Cooper Industries, Inc.

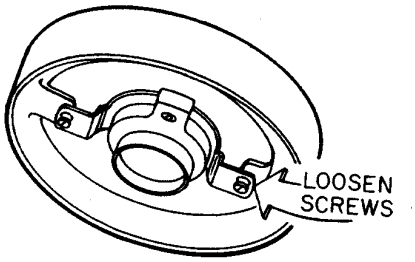

Figure 2

4. Connect supply wires to Vaporgard terminals or wire leads using methods that comply with NEC, CEC and any local codes.
5. Reinstall lampholder and mounting bracket assembly (reverse order of step 4). Make sure all wires are safely above the assembly before tightening the two screws.
6. Install lamp. See LAMP INSTALLATION AND REPLACEMENT section.
7. For fixtures with globe only (less guard), thread globe into fixture body. Hand tighten securely.
8. For fixtures with globe and guard, install as follows:

- 150W max. Incandescent Vaporgard fixture uses an integral guard cat.no. P50. 200W max. Incandescent and Fluorescent Vaporgard fixtures use an integral guard cat.no. P21. Thread segments of both guard and globe are of unequal length (keyed) to insure proper globe and guard thread match upon assembly. The clips that are attached to the guard help secure the guard to the globe. To assemble, align correctly, then push globe and guard together. Thread globe and guard assembly as a unit into the fixture body. Hand tighten securely (see Figure 3).
- 300W max. Incandescent fixture requires a different globe (G251) when the guard cat.no. P22 is used. The guard contains a threaded adapter that holds the globe in place.

  Place the globe inside the guard and thread the guard into the fixture body. Hand tighten securely.

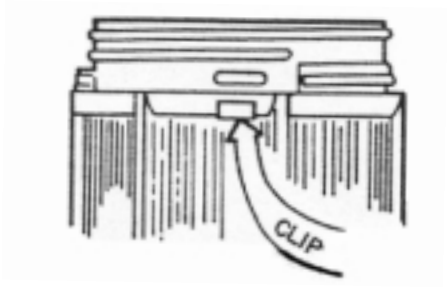

Figure 3

9. Turn power on.

REFLECTOR INSTALLATION

(See Figure 4)

1. Loosen three (3) screws on the reflector.
2. Place reflector on fixture body flange.
3. Securely tighten the three screws.

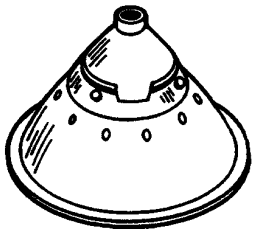

Figure 4

LAMP INSTALLATION AND REPLACEMENT

1. Disconnect power to fixture and allow to cool completely.
2. Unscrew completely the globe (or globe with guard) and set aside.
3. Remove lamp.
4. Perform cleaning and inspection as noted in the MAINTENANCE section.
5. Install the new lamp into lampholder. New lamp must be the identical type as marked on fixture nameplate.

⚠ CAUTION

- To avoid shortened lamp life, lampholder failure, wiring faults or ballast failure tighten or plug in lamp firmly and completely.
- To avoid injury, guard against lamp breakage.

6. Thread globe (or globe with guard) in fixture body and hand tighten securely.

Copyright © 2002, Cooper Industries, Inc.

MAINTENANCE

1. Perform visual, electrical and mechanical inspections on a regular basis. The environment and frequency of use should determine this. However it is recommended that checks be made at least once a year. We recommend an Electrical Preventive Maintenance Program as described in the National Fire Protection Association Bulletin NFPA 70B: Recommended Practice for Electrical Equipment Maintenance (www.nfpa.org).
2. The globe, reflector and guard should be cleaned periodically to insure continued lighting performance. To clean, wipe the reflector, then the guard and globe with a clean damp cloth. If this is not sufficient, use a mild soap or a liquid cleaner such as Collinite NCF or Duco #7. Do not use an abrasive, strong alkaline, or acid cleaner. Damage may result.
3. Visually check for undue heating evidenced by discoloration of wires or other components, damaged parts, or leakage evidenced by water or corrosion in the interior. Replace all worn, damaged or malfunctioning components and clean gasket seals before putting the fixture back into service.
4. Electrically check to make sure that all connections are clean and tight.
5. Mechanically check that all parts are properly assembled.

UL FIXTURE FITTING
VAPORGARD INCANDESCENT AND FLUORESCENT LIGHTING FIXTURE
(Diagram A)

INCANDESCENT LIGHTING FIXTURES

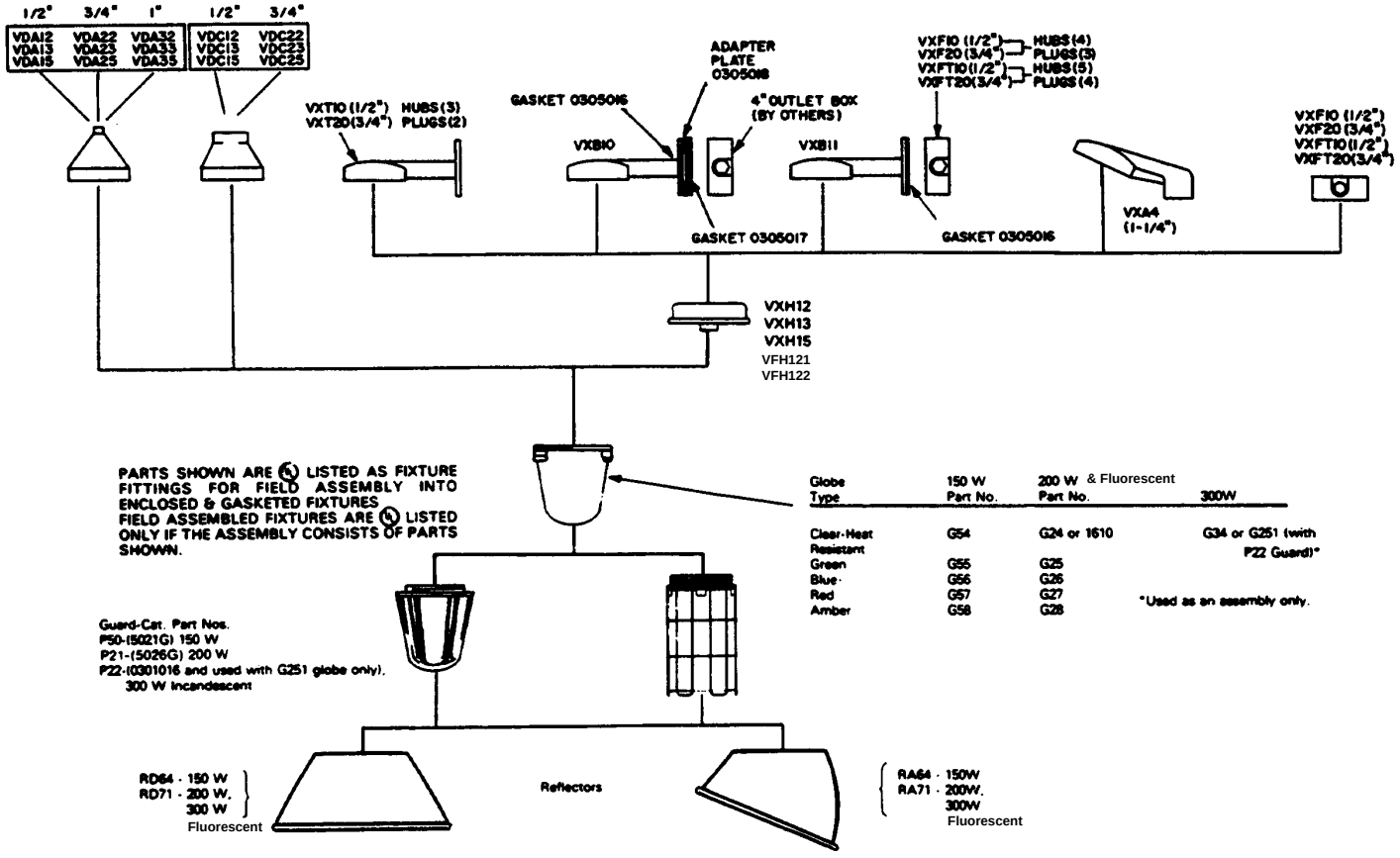

Copyright © 2002, Cooper Industries, Inc.

All statements, technical information and recommendations contained herein are based on information and tests we believe to be reliable. The accuracy or completeness thereof are not guaranteed. In accordance with Crouse-Hinds "Terms and Conditions of Sale", and since conditions of use are outside our control, the purchaser should determine the suitability of the product for his intended use and assumes all risk and liability whatsoever in connection therewith.

COOPER Crouse-Hinds

Cooper Industries Inc.
Crouse-Hinds Division
PO Box 4999, Syracuse, New York 13221 • U.S.A.
Copyright© 2002, Cooper Industries, Inc.

IF 101
Revision 3
Revised 03/02
Supercedes 01/01

VAW

CROUSE-HINDS
AIRPORT LIGHTING PRODUCTS

Obstruction Light

Compliances: US Military Specification MIL-L-7830
USAF ANA Standards
FCC Rules and Regulations
Canadian Standards Association (CSA)
ICAO, ANNEX 14

TYPE C

VAW

Applications

The VAW red* obstruction light is used for nighttime obstruction marking of tall structures that may present hazards to air navigation. The VAW is usually steady burning.

Features

- Red fresnel glass globes for 360° visibility
- Threaded bottom hub (1 Inch) for mounting
- Cast aluminum housing with natural finish
- Threaded globes
- Accepts traffic signal lamps with USA medium screw base and European E27 base
- Operates on 120 or 220-240 volts and 60 or 50Hz frequency power supply when used with proper voltage lamp
- Gasket for globe seal
- Suitable for Class I, Div. 2, hazardous area applications. Identification temperature rating: T1, 450˚C **(UL Listing pending)**
- Optional wire guards (-GG option)
- Lamp Life 8000 hours at 120 Volts and 4000 hours for 220-240V applications

Ordering Information

4	3	9	6	1	—	1	1	6	—	G	R

Fixture Type:
43958 = Single
43961 = Double
43950A = Double**

Lamp Type:
No Symbols Means Lamp(s) Not Included
116 = 116W 120V 10047-1577
100 = 100W 230V 10047-2145

Options:
GG = Wire Globe Guard(s): Factory Installed Only
GR = Ground Wire(s)

* Other colored globes are available for non-obstruction lighting applications, (contact factory).

** Includes brackets for Joslyn brand lowering device. Crouse-Hinds also offers the complete Joslyn Obstruction Light Lowering System. Request VAW-43950A data sheet OP-1.10 from Parts Guide NAV-016.

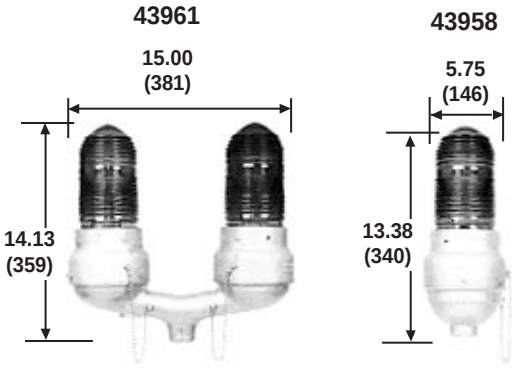

Dimensions:	Inches (Millimeters)	
	43961	43958
Shipping Weight:	16.0 lbs. 1.4 kg.	8.0 lbs. 0.7 kg
Shipping Volume:	1.4 cu.ft. .04 cu.m.	0.7 cu.ft. .02 cu.m.

Application Note:
FAA Advisory Circular 70/7460-1J "Obstruction Marking and Lighting," Chapter 13, paragraph 134.a advises that steady burning red lights should conform to FAA AC 150/5345-43 or Military Specification MIL-L-7830.

Installation Drawing

COOPER Crouse-Hinds

FCB-41257G

Dimensions:	Inches (Millimeters)
Instruction Sheet:	AP277
Shipping Weight:	80.0 lbs 36.3 kg
Shipping Volume:	8.0 cu ft .227 cu m

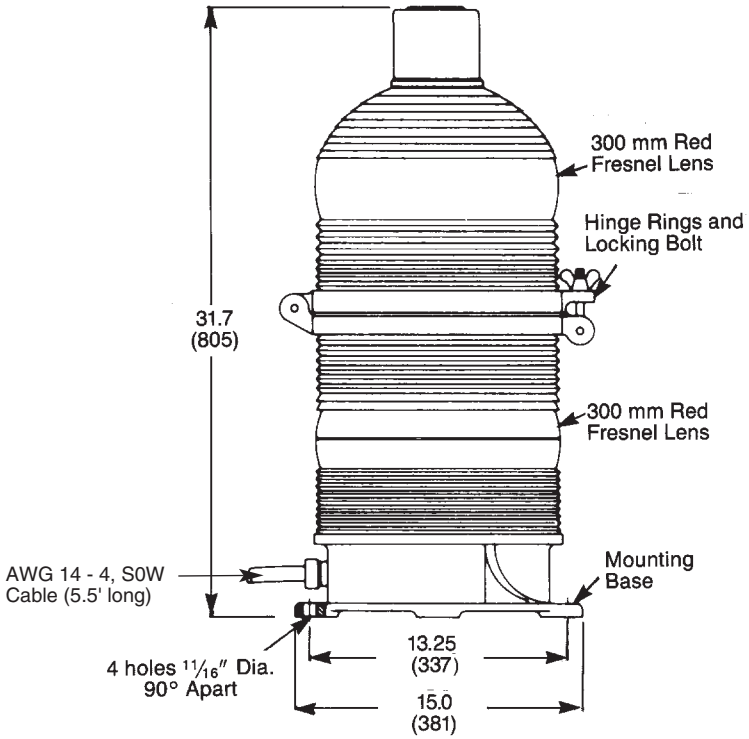

Accessories

Catalog Number*	Description	Data Sheet
70000A Series	OLC Obstruction Lighting Controllers	JT-2.1
70006	PCF Photoelectric Controller & Flasher	JT-3.1
70007 to 70009	OLF Flashers	JT-4.2
52010	PEC Photoelectric Controller	JT-4.1
70020	OLR Universal Lamp Failure Alarm Relay	JT-3.2

*Consult Data Sheets for 230 V versions.

Renewal Parts

Part Number	Description	Part Number	Description
620PS40P	Lamp, 620 W, 120 V	10050-15	Red Top Lens
10047-2541**	Lamp, 500 W, 220-240 V	10050-14	Red Upper Lens
ML2489	Gasket Set	10050-13	Red Lower Lens
601-A	Lamp Socket, Mog. Prefocus	HL5835B	Clear Top Lens (41257F beacon)
10047-1597**	Lamp Socket-S108, Mog. screw	HL5836B	Clear Upper Lens (41257F beacon)
HL5838	Wing Nut	HL5837B	Clear Lower Lens (41257F beacon)
HL5841B	Hinge Pin	HL5844	Red Color Screen (41257F beacon)
10047-2445	Lamp, 700 W, 230 V		
10047-2543	Lamp, 700 W, 120 V		

** For discontinued 41257G-S108 Beacon only.

VAW SERIES (L-810) OBSTRUCTION LIGHT

SINGLE AND DOUBLE FIXTURE

INSTALLATION INSTRUCTIONS AND PARTS LIST

COOPER Crouse-Hinds

IF 1558

SAVE THESE INSTRUCTIONS FOR FUTURE REFERENCE

INSTALLATION - SINGLE HEAD UNITS (P/N 43958)

> ⚠ **WARNING**
> De-energize circuit before relamping or working on fixture

A) Single fixtures (Figure 1) are supplied from factory fully assembled with the exception of the lamp and glass globe. To facilitate wire connections, the globe support can be disassembled from the fixture body by loosening the thumbscrew. NOTE: A safety chain is provided attaching the globe support ring to the base of the fixture body to assist with assembly and re-lamping.

(B) Install the fixture housing and pull supply wires to connect with wire leads inside fixture housing using methods that comply with NEC, CEC and any local codes.

(C) Re-Install the globe support and tighten the thumbscrew securely to hold support in place.

(D) Install lamp into lamp socket. Place the globe over the fixture body and thread until globe seats tightly against gasket.

(E) If fixture has been ordered with optional wireguard (suffix-“GG”), place the wireguard assembly over the globe until it seats into fixture housing. Tighten the 4 thumbscrews provided with wireguard to hold it in place.

(F) To install or replace the lamp, it is not necessary to remove the globe. Re-lamping is easily accomplished by loosening the thumbscrew and removing globe support ring with globe together as an assembly.

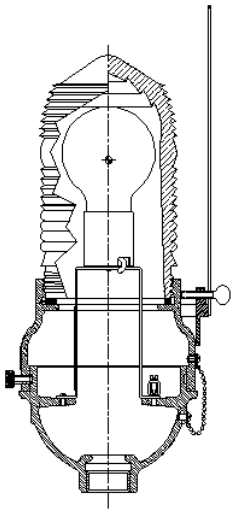

FIGURE - 1 P/N 43958

INSTALLATION – DOUBLE HEAD UNITS (P/N 43961 AND 43950A)

A) Double Head fixtures (Figure 2) and globe assembly is the same as the single fixture procedure.

(B) Feed lead wires from both fixture heads into the center section of housing and pull wires through bottom for connection to power supply wires using methods that comply with NEC, CEC and any local codes.

(C) P/N 43950A units include an adjustable guide arm for attachment to housing. The guide arm facilitates connection to an obstruction light lowering system as necessary. Incoming power wiring is made through the top of fixture body on this model.

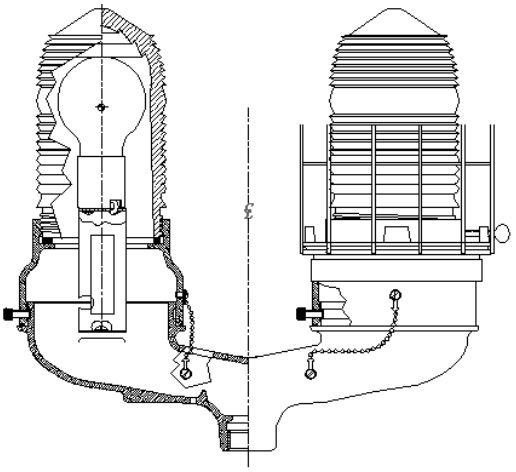

FIGURE - 2 P/N 43961

REPLACEMENT PARTS LIST

Item No.	Part No.	Description
1	KL848	Globe, Red
2	13B11-393	Gasket, Globe
3	0600190	Receptacle, Med. Screw
4	10047-1577	Lamp, 116 Watt, 120V
5	10047-2145	Lamp, 116 Watt, 230V

All statements, technical information and recommendations contained herein are based on information and tests we believe to be reliable. The accuracy or completeness thereof are not guaranteed. In accordance with Crouse-Hinds "Terms and Conditions of Sale", and since conditions of use are outside our control, the purchaser should determine the suitability of the product for his intended use and assumes all risk and liability whatsoever in connection therewith.

Copyright© 2008, Cooper Industries, Inc.

PERIMALITER® WALLPACK

PGM/PGL GLASS SERIES

Cat. # PGL400H1281		Approvals
Job ROCKWALL	Type D	

HUBBELL® Outdoor Lighting

APPLICATIONS

- Perimeter lighting for safety and security. High performance with wide lateral spread.

SPECIFICATIONS

- Cast aluminum door frame with prismatic glass refractor. Door seals to housing gasket with twin Hubbell Gard® captive fasteners.
- Die cast aluminum housing allows firm mounting over recessed junction boxes or on flat surfaces for 1/2" surface conduit. Casting dissipates ballast heat for long life. Side hub supplied for field installation of button photo control, ordered separately.
- Specular aluminum reflector with kicker panels drive maximum lamp lumens to the refractor prisms. Vertical mogul base lamp with these optics provide six to one spacing to mounting height ratio for maximum spacing or better uniformity, greater lumens and lamp life.
- PGM features 70-250 watt HPS and metal halide. PGL features 250-400 watt HPS and metal halide. HPS is available in NPF and HPF units. All metal halide is HPF. QuadTap®, 347V and 50Hz 220/240V available. Many listings include lamp for contractor convenience.
- Dark bronze 800 Series powder paint finish standard on frame and housing. For optional finishes, black, gray, white, consult factory.

LISTINGS

- CSA certified to UL 1598 for use in wet locations.

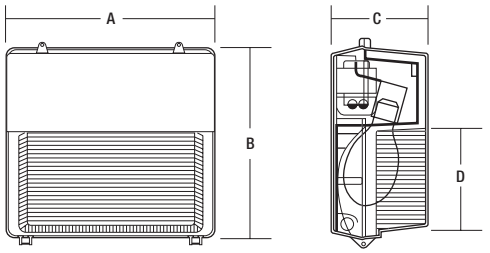

	A	B	C	D
PGM	14 7/8"	15"	7 3/16"	6 13/16"
	378 mm	381 mm	183 mm	173 mm
PGL	14 7/8"	15"	9 7/8"	6 13/16"
	378 mm	381 mm	251 mm	173 mm

ORDERING INFORMATION

ORDERING EXAMPLE

PG	**M**	**175**	**H**	**1**	**2**	**8**	**-1**	**LP**	**QSS**
Series	Size: Medium or Large	Wattage	Source	HPF	Version	Voltage	Finish	Lamp Included	Option

CATALOG NUMBER	WATTAGE	VOLTAGE/BALLAST	WEIGHT lbs.	WEIGHT kg
MEDIUM SIZE				
HIGH PRESSURE SODIUM				
PGM-070S-128-1[2]	70	Quad/AL (HPF)	23	10.4
PGM-100S-128-1	100	Quad/AL (HPF)	24	11.0
PGM-150S-128-1[2,4]	150	Quad/AL (HPF)	25	11.4
PGM-150S-128-1LP[1]	150	Quad/AL		
PGM-150S-521-1L[1]	150	120/Reactor (NPF)	18	8.2
PGM-250S-128-1[3,4]	250	Quad/AR (HPF)	30	13.6
PGM-250S-128-1LP[1]	250	Quad/AR (HPF)		
METAL HALIDE				
PGM-070H-128-1L[1]	70	Quad/AL (HPF)	24	10.4
PGM-100H-128-1L[1]	100	Quad/PLA (HPF)	25	11.3
PGM-175H-128-1[2,4]	175	Quad/PLA (HPF)	25	11.3
PGM-175H-128-1LP[1]	175	Quad/PLA (HPF)	25	11.3
PGM-250H-128-1LP[3,4]	250	Quad/AL (HPF)	27	12.2
PGM-250H-128-1LP[1]	250	Quad/PLA (HPF)	27	12.2
PULSE START METAL HALIDE				
PGM-150P-128-1LP[1]	150	Quad/Pulse Start (HPF)	25	11.3
PGM-250P-128-1LP[1]	250	Quad/Pulse Start (HPF)	27	12.2

1 Lamp included.
*2 On these units, change **1** to **3** for gray Lektrocote® finish (ex: **PGM-175H-128-3**). For alternative finishes, consult factory.*
3 Mercury vapor lamps may be operated on MH ballast.
*4 Available in 480V, change **8** to **5**.*
*NOTE: For Tri-Tap® (120/277/347V) change **8** to **6** (for Quad-Tap® ballasts, 208& 240V not CSA).*
NOTE: 50 Hz 220/240V available on 70 watt HPS, 150 watt HPS, 250 watt HPS and 175 watt MH.
NOTE: 208V CWI ballasts avail. on 175 watt MH and 250 watt HPS, 240V CWI ballast avail. on 250 watt MH.

CATALOG NUMBER	WATTAGE	VOLTAGE/BALLAST	WEIGHT lbs.	WEIGHT kg
LARGE SIZE				
HIGH PRESSURE SODIUM				
PGL-250S-128-1	250	Quad/PLA (HPF)	32	14.5
PGL-400S-128-1	400	Quad/PLA (HPF)	36	16.3
PGL-400S-128-1LP[1]	400	Quad/PLA (HPF)	36	16.3
METAL HALIDE				
PGL-250H-128-1	250	Quad/PLA (HPF)	30	13.6
PGL-400H-128-1	400	Quad/PLA (HPF)	33	15.0
PGL-400H-128-1LP[1]	400	Quad/PLA (HPF)	33	15.0
PULSE START METAL HALIDE				
PGL-350P-128-1LP[1]	350	Quad/Pulse Start (HPF)	33	15.0

1 Lamp included.
*NOTE: Units are QuadTap®. For Tri-Tap® (120/277/347V) change **8** to **6**. For 480V change **8** to **5**. Standard finish is dark bronze. Units have mogul base sockets, lamps not included unless noted.*
NOTE: 50 Hz 220/240V available.

ORDERING INFORMATION

ACCESSORIES (order as separate part #)

Catalog Number	Description
PBT-1	Photocontrol, 120 volt
PBT-234	Photocontrol, 208, 240, 277 volt
PGPS[1]	Polycarbonate Shield for refractor
PGWG[1]	Wire Guard for refractor
PVLV	Full Cutoff Visor, formed aluminum, bronze finish

1 Guard & shield can be used on the same fixture.

OPTIONS (factory installed, add appropriate suffix)

Catalog Number	Description
-EM	Double Contact Socket for remote power (less lamp) all units
-QSS	Quartz Restrike System including relay (less lamp) all units (double contact bayonet socket)
-RS	Hot Restrike System, quickly restores main lamp output after power outage (HPS only)

PHOTOMETRIC REPORTS

Catalog Number	Report #
PGM-150S-XXX-X	**HP07246.IES**
PGM-175H-12X-X	**HP07245.IES**
PGM-250H-12X-X	**HP07252.IES**
PGM-250S-12X-X	**HP07358.IES**
PGL-400H-12X-X	**HP07232.IES**
PGL-400S-12X-X	**HP07229.IES**

Due to our continued efforts to improve our products, product specifications are subject to change without notice.

HUBBELL®
Outdoor Lighting

Hubbell Outdoor Lighting • 101 Corporate Drive • Spartanburg, SC 29303 • PHONE: 864-599-6000
For more information visit our web site: **www.hubbell-ltg.com**

Copyright © 2005 HUBBELL LIGHTING All Rights Reserved PGM/PGL-SPEC10/05 Printed in USA

PERIMALITER II® AND PERIMASHIELD II®
INSTALLATION INSTRUCTIONS
PGL-PGS-B

See warnings on carton.

WARNINGS:
- Read and follow the lamp manufacturer's warning and use information before installing or relamping this light fixture.
- Disconnect power before installation or servicing.
- Install, operate and maintain to meet all applicable codes.
- Protect all wiring connections with approved insulators (by others).
- Selected fixture voltage must match supply line voltage.

GENERAL INFORMATION, JUNCTION BOX MOUNT:
- Allow 6" (152.4 mm) minimum supply wire outside of junction box.
- Use two 5/16" (7.925 mm) dia. min. hardware (by others) to mount fixture.

GENERAL INFORMATION, CONDUIT MOUNT:
- Allow 12" (304.8 mm) minimum supply wire outside of conduit.
- Use two 5/16" (7.925 mm) dia. min. hardware (by others) to mount fixture.
- Housing conduit threads are ½-14 NPS.
- Use a waterproof pipe joint compound (by others) for all entries into housing.
- Plug all unused entries into housing.

GENERAL INFORMATION: INSTALLATION INSTRUCTIONS - PHOTOCONTROL
1. Remove retaining screws (4) and remove reflector assembly (3).
2. Remove upper ½-14 NPS conduit plug (10).
3. Install (PBT) Photocell gasket and insert photocell from inside thru housing and extending outward as far as possible. Secure with black plastic nut.
4. Select ballast voltage lead which matches supply voltage and connect to red load lead from photocell.
5. Connect Supply voltage lead to black lead from photocell.
6. Connect Common from photocell. Common lead from ballast and Supply Common lead together.
7. Connect Green ground lead from fixture to Supply Ground lead.
8. Protect all unused leads having exposed wire with approved insulators.
9. Replace reflector assembly (3) and retaining screws (4).
10. Close refractor door and secure with two screws (1).

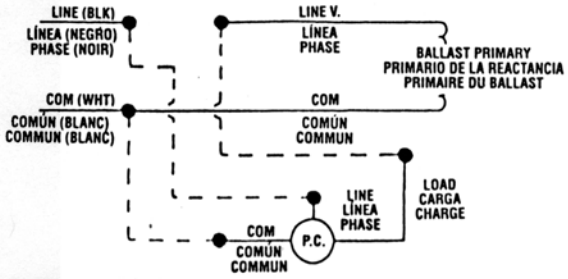

JUNCTION BOX MOUNT: (See Figures 1 and 2)
1. Loosen lens retaining screws (1) and remove lens.
2. Remove retaining screws (4) and remove reflector assembly (3).
3. Drill or knockout two 3/8" (9.525 mm) holes at boss locations (6) on casting.
4. Locate and drill mounting holes using template provided.
5. Mount fixture to wall.
6. Loosen access cover screw (7) and swing cover (8) open.
7. Make wiring connections. Push wires and connections into junction box.
8. Make sure that ends of unused voltage leads are capped.
9. Swing access cover shut. Do not pinch wiring. Tighten retaining screw.
10. Replace reflector assembly (3) and retaining screws (4).
11. Remove clear adhesive cover from reflector and discard. Tighten retaining screws.
12. Install lamp.
13. Replace lens and tighten retaining screws (1).

CONDUIT MOUNT: (See Figures 1 and 2)
1. Follow steps 1-5 listed above.
2. Loosen raceway cover retaining screw (12) and remove raceway cover (5).
3. Thread conduit to fixture.
4. Make wiring connections. Place all connections in raceway area (5).
5. Make sure that ends of unused voltage leads are capped.
6. Replace raceway cover and tighten retaining screw.
7. Follow steps 10-13 listed above.

ADJUSTABLE OPTICS: (See Figure 3)
The PERIMASHIELD® features adjustable cutoff. The adjustment can be made by:
1. Remove the (2) black cutoff shield retaining screws (2).
2. Lift off black cutoff shield (9).
3. Loosen socket retaining screws (11).
4. Reposition socket.
5. Tighten socket retaining screws.
6. Re-install black cutoff shield and retaining screws.

HUBBELL

Hubbell Lighting, Inc.
A Subsidiary of Hubbell Incorporated
2000 Electric Way
Christiansburg, VA 24073-2500
(540) 382-6111
FAX (540) 382-1526

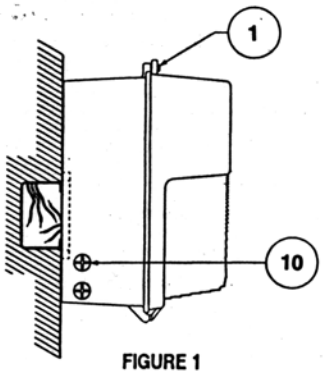

FIGURE 1
FIGURA 1

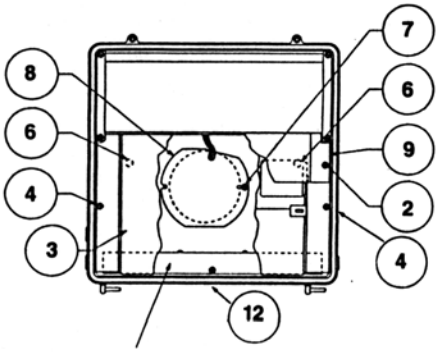

THRU WIRING UNDER RACEWAY COVER
CÂBLAGE EN CONTINU DERRIÈRE LE RÈFLECTEUR
CABLEADO CONTINUO (DETRÁS DEL REFLECTOR) 5

FIGURE 2
FIGURA 2

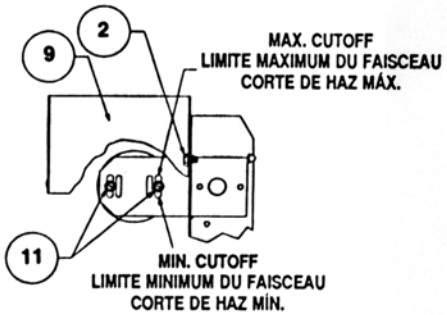

FIGURE 3
FIGURA 3

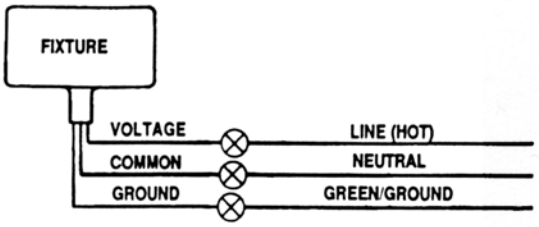

WIRING DIAGRAM

268-1108-9901

NOT TO SCALE

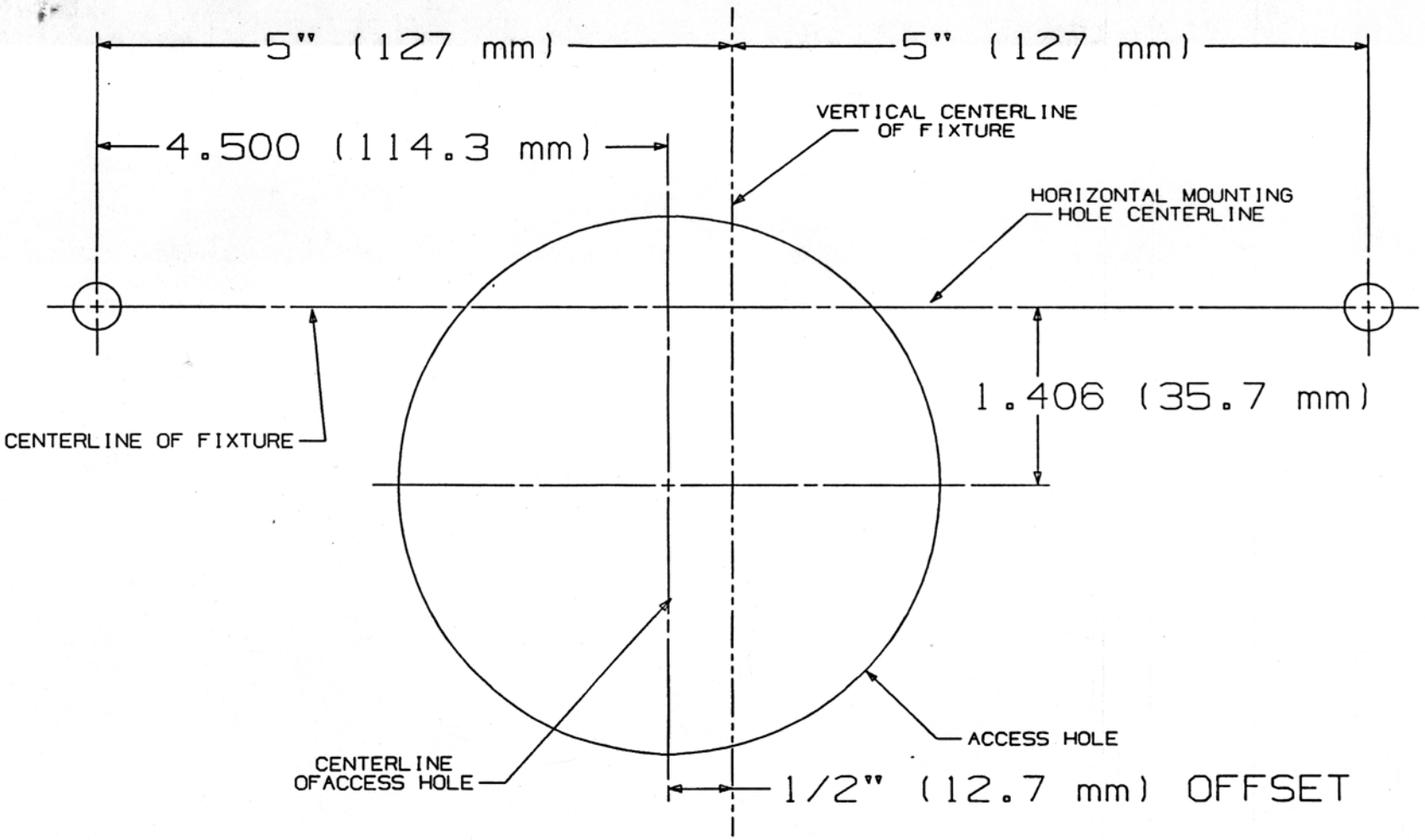

268-1108-9901

Hubbell Lighting, Inc.
A Subsidiary of Hubbell Incorporated
2000 Electric Way
Christiansburg, VA 24073-2500
(540) 382-6111
FAX (540) 382-1526

DUAL LITE

TYPE E

N4X™ Series I

Rugged self-contained emergency lighting unit designed to perform in damp or harsh industrial environments.

SPECTRON®

Self-Testing/Self-Diagnostic Electronics System

Unit Features

- Completely self-contained
- Models operate for up to 4 hours
- Maintenance-free, lead-acid battery
- Fully adjustable dual lighting heads
- Gray finish, sealed and gasketed construction
- Remote fixture capability
- Available in 6- or 12-volt versions
- Temperature range: 10°C to 40°C (50°F to 104°F)
- UL924 Listed (Emergency Lighting)

Spectron Features

- Meets 1998 UL standards for self-testing/self-diagnostic models
- Provides automatic self-diagnostic monitoring and testing of unit operation
- Automatically performs routine maintenance and assures operational readiness at all times
- Monitors charger and lamp operation
- Emergency lamps and transfer circuit monitored during self-test cycles and power failures
- Routine discharge cycles insure optimum battery performance and maximum useful life
- Automatic 1-minute self-test every 28 days and 30-minute self-test every 6 months
- Automatic battery protection
- Automatic unit transfer in brownout conditions
- Automatic AC lockout circuit
- Temperature compensated charger
- 15-minute retransfer delay
- Flashing LED indication of unit malfunction or test cycle
- All detected malfunctions retained in memory until corrected and retested
- Test switch allows a programmable 1, 5, 30 or 60-minute system check at any time

Spectron Electronics

The Spectron self-testing/self-diagnostic electronics provide:

- Visual indication of AC power status
- Visual Indication of all self-diagnostic test cycles
- Visual indication of unit malfunctions including:

• Battery fault • Charger fault • Transfer fault • Lamp fault

LED Indicators

Red Status LED

Under normal operating conditions, the red Status LED indicator will remain off. In the event the Spectron Controller detects a malfunction, the red Status LED will indicate the fault per the table at right.

Red Status LED Code	Description
One blink ON/pause	Battery not connected
Two blinks ON/pause	Battery fault
Three blinks ON/pause	Charger fault
Four blinks ON/pause	Transfer circuit fault
Five blinks ON/pause	Lamp head fault

Green Status LED

The green Status LED serves as both an AC power and a self-test indicator. During normal operation, the green status LED will be constantly illuminated, indicating the presence of AC power. During all automatic or manual self-test cycles, the green Status LED will blink at a 1 cycle per second rate.

Manual Tests

Using the unit test switch, users can initiate 1, 5, 30 or 60-minute diagnostic/discharge cycles per the table at right.

Initiating Action	Test Cycle
Press test switch once	1 minute
Press test switch twice	5 minute
Press test switch 3 times	30 minute
Press test switch 4 times	60 minute

Product Selector

Fixture Type	Model No.	Voltage	Battery Type	Output Wattage 1½ Hrs.	2 Hrs.	3 Hrs.	4 Hrs.
E	**N4X2**	6	Lead-Acid	15	--	--	--
	N4X4	6	Lead-Acid	31	22	15	--
	N4X7	6	Lead-Acid	50	36	29	22
	N4X7-12V	12	Lead-Acid	50	36	29	22
	N4X14	6	Lead-Acid	100	79	61	44
	N4X14-12V	12	Lead-Acid	100	79	61	44
(√)	**Options (add suffix to model)**						
	I		Spectron self-testing/self-diagnostic electronics				
	-0		Unit supplied without lighting heads (1)				
	-1		Unit supplied with one lighting head (1)				
	-L		Shatter Containment Lamp Option (2)				
	-A31		Auxiliary 3-conductor AC line cord - 120VAC				
	-A32		Auxiliary 3-conductor AC line cord - 277VAC				
(√)	**Accessories (order separately)**						
	40G		Wire guard				
	GNXSB		Matching remote head - single(3)				
	GNXDB		Matching remote head - twin(3)				

(1) Not available on N4X2I unit.
(2) Protective lamp cover safely contains lamp fragments in the event of accidental breakage. Not for use in food processing/preparation or hospitals.
(3) Supplied with mounting plate. Specify voltage and wattage when ordering. Example: **GNXSB0618**. See "Remote Heads and Fixtures" Data Sheet 0602008 for available lamps.

Dimensions

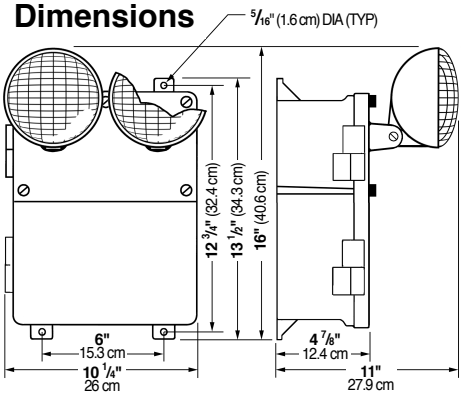

HUBBELL®

Hubbell Lighting, Inc.

Construction

Unit Housing: Sealed and gasketed case is constructed of thermoplastic polycarbonate in a gray finish. Hinged front cover is secured by means of stainless steel hardware. Battery compartment vented for safety.

Lamp Housings: Lamp housings and swivel assemblies constructed of flame-rated, UV stable thermoplastic in a gray finish. The lamp terminals are coated to resist corrosion and the lamp head swivel is sealed from the environment.

Illumination

Lamp Type: Incandescent sealed beam type
Lamp Voltage: 6 or 12 volts (model dependent)
Lamp Wattage: 7.2 watts (6 volt models), 9 watts (12 volt models)
Rated Lamp Life: 100 hours

Photometrics

SBT lamp (Horizontal Isofootcandle Distribution)
Photometrics measured by independent testing laboratory

6 volt, 7.2 watt SBT Lamp

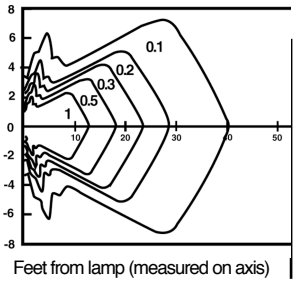

Feet from lamp (measured on axis)

12 volt, 9 watt SBT Lamp

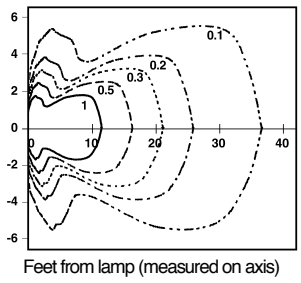

Feet from lamp (measured on axis)

Installation

Unit Mounting: Units are provided with pre-drilled flanges for wall or beam mounting. The design permits top conduit entry for power and remotes. Drilling templates are provided.

Wiring: Connections for remote fixtures are fused. All AC connections made inside unit housing.

Operating Temperature Range

All models: 10°C to 40°C (50°F to 104°F)

Electronics

Input: 120/277VAC, 60 Hz. (standard)
Charger: Constant voltage, current limited, temperature compensated type
Transfer: Solid-state design
Built-in Protection: AC lockout, transformer isolation, low battery voltage disconnect, brownout protection and 15-minute retransfer delay
Battery Recharge Cycle: Per UL time standards
Test Means: Integral test switch

Self-Diagnostic Operation

LED Indicators: Red "Service Alert" LED indicator and Green "Operating Status" LED indicator

Visual Fault Indications: Battery fault, charger fault, transfer fault and lamp fault

Service Alert Memory: All detected malfunctions remain in memory until corrected and retested

Self-Testing Operation

Automatic Test Cycles: 1-minute self-test every 28 days(± 3.5 hours) and a 30 minute self-test every 6 months (± 1 day)

Manual Tests: Test switch allows a programmable 1, 5, 30 or 60 minute system check at any time

Battery

Type: Maintenance-free, lead-acid

Power Consumption

120 or 277VAC: 20 watts (maximum)

Compliances

UL 924
NFPA-101

Warranty

Unit and Electronics: 5 years full
Battery: 10 years (5 years full, 5 years pro-rata)

Suggested Specifications

Emergency lighting shall be provided by a Dual-Lite N4X Series I model _____ designed for installation in damp or corrosive environments. Construction shall be of thermoplastic polycarbonate in gray finish with matching hinged front cover. Unit battery compartment shall be vented for safety. Units shall be provided with pre-drilled mounting flanges for wall or beam mounting. The design will permit top conduit entry for power and remotes. Drilling templates shall be provided. Unit design will allow universal 120/277VAC, 60 Hz operation standard. Total unit output capacity shall be___ watts. Emergency illumination will be provided by (one)(two) unit mounted (6-volt, 7,2 watt)(12 volt, 9 watt) sealed beam type lighting heads. Lamp housings and swivel assemblies shall be constructed of flame-rated, UV stable thermoplastic in a gray finish. The lamp terminals will be coated to resist corrosion and the lamp head swivel shall be sealed from the environment. Emergency power source shall be a fully rechargeable, maintenance-free, lead-acid battery. Spectron electronics operation shall be fully automatic. Accidental discharge of the unit battery prior to energization will be prevented by an AC lockout circuit. The unit's green Status LED located on the Spectron display panel will illuminate to indicate the presence of AC power. The unit's red Status LED will blink after application of AC power if the battery connection is not completed. During normal operation, the unit's charging circuit will maintain the battery at full capacity and the Spectron Controller shall constantly monitor charger performance. Should the terminal voltage vary from design parameter values, the unit's red Status LED will blink, indicating a malfunction of the battery or charger. Upon interruption of normal AC power, or brownout conditions exceeding a 20% drop from nominal voltage, the Spectron Controller shall automatically switch the emergency lighting load to the battery. Emergency power will be provided for a minimum of 90 minutes. During emergency operation, the battery shall be protected from deep discharge by a low-voltage battery disconnect circuit. Upon return of normal utility power the unit will remain in emergency mode for a period of 15 minutes and the charger shall then begin a recharge cycle. The charger will bring the battery to full capacity within acceptable UL time standards. The Spectron Controller will automatically initiate a one minute discharge/diagnostic test every 28 days ± 3.5 hours and a 30-minute discharge/diagnostic test every 6 months ± 1 day. These tests will be designed to exercise the unit's battery and allow the Spectron Controller to analyze emergency operation performance. Any malfunction of the unit's transfer circuit or emergency lamps will cause the red Status LED on the unit's display panel to blink. Under normal operation, all red Status LED blinking indications of unit malfunction shall remain latched until corrected and retested. A manual test switch will allow a user-programmable 1, 5, 30 or 60-minute diagnostic/discharge test at any time. During all automatic and user initiated self-tests, the unit's green Status LED will blink to indicate a diagnostic cycle in process. User self-tests can be canceled at any time by pressing the test switch.

NOTE: Self-testing, self-diagnostic models with over 80 watts of capacity require a minimum load of 35 watts for accurate lamp failure indications.

Copyright© Dual-Lite, All Rights Reserved - Specifications subject to change without notice. Printed in U.S.A.

N4X Series Spectron®

Self-Diagnostic Electronics Option

Operating Instructions

Spectron Electronics

All Liteforms Collection models with the Spectron (I) provide:

- *Visual indication of AC power status*
- *Visual indication of all self-diagnostic test cycles*
- *Visual indication of unit malfunctions including:*
  - *Battery fault*
  - *Charger fault*
  - *Transfer fault*
  - *Lamp fault*
- *User initiated test cycles of 1, 5, 30 or 60 minutes*
- *Temperature compensated charger for longer battery life*
- *15 minute retransfer delay*

LED Indicators

Two status indicators, one red and one green are provided on the control panel of all models equipped with the Spectron option.

Red Service Alert LED

Under normal operating conditions, the Service Alert LED indicator will remain off. In the event the Spectron Controller detects a malfunction, the Service Alert LED will blink at a 1 Hz. rate based on the following table:

SERVICE ALERT CODES
● = battery disconnected
● - ● = battery fault
● - ● - ● = charger fault
● - ● - ● - ● = transfer fault
● - ● - ● - ● - ● = lamp fault

Red Status LED Code	Description
One blink ON/pause	Battery not connected
Two blinks ON/pause	Battery fault
Three blinks ON/pause	Charger fault
Four blinks ON/pause	Transfer circuit fault
Five blinks ON/pause	Emergency Lamp fault

Green Operating Status LED

The green Operating Status LED serves as both an AC power and a self-test indicator. During normal operation, the Operating Status LED will be illuminated indicating the presence of AC power. During all automatic or manual self-test cycles, the Operating Status LED will blink at a 1 Hz. rate.

operating status
on = ready
off = ac off
blinking = test in process

Manual Tests

Using the unit test switch, users can initiate different duration test cycles based on the following table:

Initiating Action	Test Cycle
Press test switch once	1 minute
Press test switch twice	5 minute
Press test switch 3 times	30 minute
Press test switch 4 times	60 minute

Note: Pressing test switch at any time after a test cycle has begun cancels remainder of test and returns unit to normal operation.

Lamp Sensing Adjustment

Models N4X2I

These models are shipped without remote fixture capacity: the lamp sensing circuitry is factory-set. No further adjustments required.

All other N4X Spectron Series Models

Liteforms N4X Spectron Series remote capacity models provide sufficient battery power to operate the unit's two integral lighting heads plus one or more remote lighting fixtures. In order for the Spectron electronics module to detect a lamp failure in any of the connected fixtures, the lamp sensing circuit must be adjusted.

Procedure:

1. With a small screwdriver, turn the Lamp Sense Adjust potentiometer fully **clockwise**.

Refer to Fig. 1, below.

Fig. 1 Charger Board

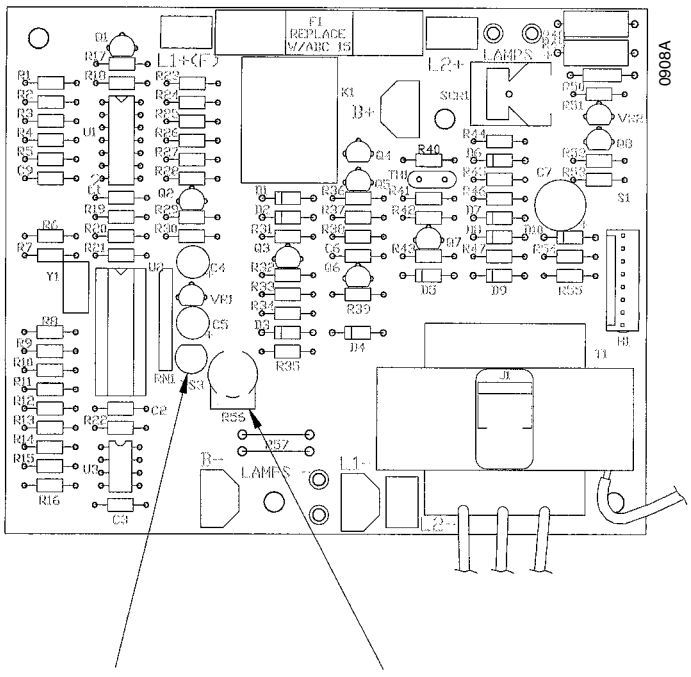

2. Press the unit test switch once. The emergency lamps will illuminate and a 1 minute self-test will begin. The green "Operating Status" LED on the unit's Spectron control panel will also begin to flash. The "Lamp Fail" LED located on the charger board (See Fig. 1) should not be illuminated at this time.

HUBBELL LIGHTING, INC.

N4X Series Spectron®

Self-Diagnostic Electronics Option

Operating Instructions

3. Slowly turn the “Lamp Sense Adjust” potentiometer **counterclockwise** until the “Lamp Fail” LED on the charger board (See Fig. 1) illuminates. Then turn the adjustment pot back clockwise **just slightly beyond** the point where the “Lamp Fail” LED turns off to avoid false failure indications. At this point, the red “Service Alert” LED on the unit’s Spectron control panel will begin a repetitive cycle of flashing 5 times followed by a pause (“lamp fault” service alert).

4. While the self-test is still in progress, disconnect one of the emergency lamp wires from the charger board. The “Lamp Fail” LED on the charger board (See Fig. 1) should turn on. Reconnect the lamp wire and observe that the “Lamp Fail” LED goes out. If “Lamp Fail” LED remains illuminated, turn the “Lamp Sense Adjust” potentiometer fully clockwise and repeat step 3.

5. Allow the 1 minute self-test to end (or press the test switch again to cancel self-test cycle).

6. Press the test switch again. Verify that the “Lamp Fail” LED and the “Service Alert” LED are not illuminated.

Operation

Spectron electronics operation is fully automatic. Accidental discharge of the unit battery prior to energization is prevented by an AC lockout circuit. The unit’s green “Operating Status” LED, located on the Spectron display panel, illuminates to indicate the presence of AC power. The unit’s red “Service Alert” LED will blink after application of AC power if the battery connection is not completed. During normal operation, the unit’s charging circuit maintains the battery at full capacity and the Spectron Controller constantly monitors charger performance. Should the terminal voltage vary from design parameter values, the unit’s red “Service Alert” LED will blink, indicating a malfunction of the battery or charger. Upon interruption of normal AC power, or brownout condition, the Spectron Controller automatically switches the emergency lighting load to the battery. Emergency power will be provided for a minimum of 90 minutes. During emergency operation, the battery is protected from deep discharge by a low voltage battery disconnect circuit. Upon return of normal AC power, a 15 minute retransfer delay holds the unit in emergency operation mode, allowing utility voltage to stabilize prior to reconnection. The charger will then begin a recharge cycle. A temperature-compensated float voltage type charger is provided in N4X models utilizing Lead-Calcium batteries. This charger is designed to adjust charging voltage with changes in ambient temperature to maximize the life and performance of the unit’s batteries. The charger will bring the battery to full capacity within acceptable U.L time standards. The Spectron Controller automatically initiates a one minute discharge/ diagnostic test every 28 days ± 3.5 hours and a 30-minute discharge/diagnostic test every 6 months ± 1 day. These tests exercise the unit’s battery to optimize its capacity and allows the Spectron Controller to analyze emergency operation performance. Any malfunction of the unit’s transfer circuit or emergency lamps will cause the red “Service Alert” LED on the unit’s display panel to blink. During normal operation, all red “Service Alert” LED blinking indications of unit malfunction remain latched until corrected and retested. A manual test switch allows a user programmable 1, 5, 30 or 60-minute diagnostic/discharge test at any time. During all automatic and user initiated self-tests, the unit’s green “Operating Status” LED will blink to indicate a diagnostic cycle in process.

Copyright© Hubbell Lighting, Inc., All Rights Reserved • Specifications subject to change without notice. • Printed in U.S.A.

0603123 A 5/08

SUPERWATT 3D LIGHTING

Cat. # SWW400H8APWHF1		Approvals
Job ROCKWALL	Type F	

HUBBELL® Industrial Lighting

APPLICATIONS

- Medium to high mounting heights in the 15' to 25' range.
- Excellent for lighting assembly areas.

SPECIFICATIONS

- 2.2:1 spacing-to-mounting height ratio.
- Refractor delivers 95% efficiency, 27% uplight and greatly reduced output in the direct glare zone.
- Pendant or surface mount fixtures available in metal halide up to 400 watts, and up to 350 watt Electro-Reg® ballast system unit.
- 250 or 400 watt high pressure sodium ballasts are also available.
- 40°C is standard on all 250 and 400 watt units.
- Factory installed premium lamp included.

LISTINGS

- SWW Series can be ordered NSF certified to NSF Standard C-2, use option **-FP**, minimum 90°C supply conductors. NSF

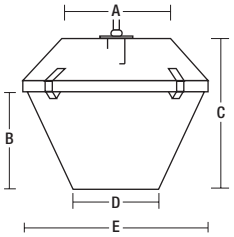

PENDANT MOUNT

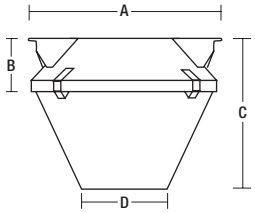

SURFACE MOUNT

	A	B	C	D	E
PENDANT MOUNT	13 1/8"	11 9/16"	17 7/8"	10 1/4"	22 1/2"
	333 mm	294 mm	454 mm	260 mm	571 mm
SURFACE MOUNT	24 1/4"	6 15/16"	17 7/8"	10 1/4"	
	616 mm	176 mm	454 mm	260 mm	

ORDERING INFORMATION

ORDERING EXAMPLE

SW - W - 400 - W - 8 - A - P - WH - XX

Series | Listing | Wattage | Lamp/ballast | Voltage | Refractor | Mounting | Color | Options

SERIES

SW[1]	Superwatt

LISTING

D	Damp Location
W	Wet Location

WATTAGE

175	175 watt (metal halide only)
200	200 watt (pulse start MH only)
250	250 watt
320	320 watt (pulse start MH only)
350	350 watt (pulse start MH & Electro-Reg® only)
400	400 watt

LAMP/BALLAST

E[2]	Electro-Reg® (175 or 350 watt only)
H[3]	Metal Halide
S	High Pressure Sodium
W	Pulse Start Metal Halide

VOLTAGE

1	120 volt (Electro-Reg® only)
2	208 volt
3	240 volt
4	277 volt (Electro-Reg® only)
F	347 volt (Electro-Reg® only)
5	480 volt
6	Tri-Tap® -120/277/347V
8	Quad-Tap® (multi-tap) 120/208/240/277V

REFRACTOR

A	Acrylic
P	Polycarbonate

MOUNTING

P	Pendant Mount
C[4]	Ceiling Mount

COLOR

WH	White (standard)
GR	Gray (optional)

F1 (120 VOLT)

OPTIONS

-F(X)[6]	Fusing (X indicates voltage)
-HA	55°C Listing (250 watt only)
-CXHLPX[7,8]	Cord, Hook/Loop, & 20A Plug
-CHL	2' Exposed Cord Hook/Loop
-QSS	Quartz Standby, includes 150W lamp
-QST	Quartz Time Delay, includes 150W lamp
-SLD-1[7,8]	Switch Level Dimming w/ 120V control
-SLD-2[7,8]	Switch Level Dimming w/ 24V control
-SLD-3[7,8]	Switch Level Dimming w/ 277V control
-LL	Less Lamp
-S	Screw Down Refractor
-EM	Emergency Quartz Lamp Socket
-FP	National Sanitation Foundation Listed

1 Includes factory installed lamp.
2 Includes system optimized lamp. Electro-Reg® shipped standard with factory installed premium lamp.
3 Mercury vapor lamps will operate on MH ballast.
4 Surface mounting units for mounting on concrete and steel only.
5 For cord length, replace first **X** *with* **2**, **4**, **6**, **8**, **10**, *or* **12**.
6 For voltage, replace second **X** *with* **1** *- 120V,* **2** *- 208V,* **3** *- 240V,* **4** *- 277V,* **5** *- 480V,* **6** *- 347V.*
7 For motion sensor and switch level interface panel accessories, see page 826 of Product Selector Guide.
8 SLD is not compatible with Electro-Reg®.

ACCESSORIES

(order as separate part #)

Catalog Number	Description
SW-WG	Wireguard with safety chain
CH-TLR(X1)[1]	Top Luminaire Retainer (all pendant mounting Superwatts have TLR bracket)

1 Luminaire retainers reduce risk of equipment falling. To specify length, substitute for **X**: **6** *- 6 ft.,* **10** *- 10 ft.,* **12** *- 12 ft.,* **16** *- 16 ft.*

MAX AMBIENT TEMPERATURE CHART

WATTAGE	MAX TEMP
175	55°C
200	55°C
250	40°C
320	40°C
350	40°C
400	40°C

Due to our continued efforts to improve our products, product specifications are subject to change without notice.

Industrial Lighting

Hubbell Industrial Lighting • 101 Corporate Drive • Spartanburg, SC 29303 • PHONE: 864-599-6000

For more information visit our web site: **www.hubbell-ltg.com**

Copyright © 2005 HUBBELL LIGHTING All Rights Reserved SW-SPEC10/05 Printed in USA

INSTRUCTIONS FOR INSTALLATION OF SUPERWATT® FIXTURES

Catalog Number Series: SWW and SWD
Pendant and Surface/Thru Wire Mounting

Please Read Thoroughly Before Installing

WARNING: When installing, relamping or otherwise servicing this fixture in any way, observe all precautions usually followed when dealing with high voltage equipment. Disregarding these precautions may result in electrical shock and possible injury to individual servicing the equipment. Never connect or disconnect any component while the power supply is ENERGIZED.

GENERAL INSTRUCTIONS - SAVE THESE INSTRUCTIONS FOR FUTURE REFERENCE.

1. Upon receipt of this accessory, thoroughly inspect it for any freight damage and if it is found, the carrier should be notified and held accountable.
2. Make sure supply line voltage being used is the same as that specified on the fixture nameplate.
3. All installations and wiring should be per National Electrical Code (N.E.C.) and local rules and regulations.
4. **It is not necessary to remove lens to install or wire fixture.**

FIG. 1

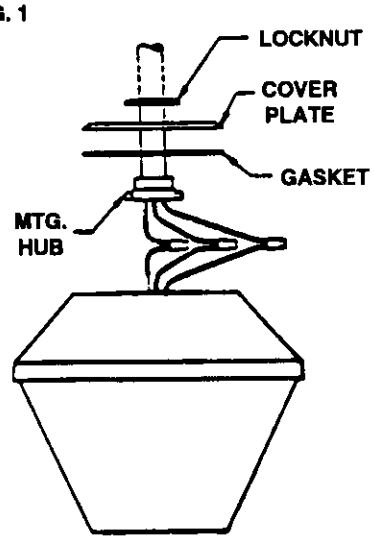

BALANCED PENDANT MOUNTING (FIGURE 1)

1. Carefully stick the gasket (supplied for wet locations) to the bottom of the cover plate (away from turned up edges).
2. Place locknut, cover plate/gasket combination up on conduit. Install mounting hub to 3/4" threaded conduit. Use a suitable thread lubricant to seal this threaded joint for wet locations against water leakage. Tighten hub set screw.
3. Lift fixture to mounting hub, with supply wires hanging out.
4. Rotate fixture 1/4 turn on hub and let hang while supply wires are connected to the correctly marked fixture wires corresponding to the supply voltage. Connect fixture ground wire to supply ground.
5. Tuck connected wires and extra wires inside wiring compartment in top of housing.
6. Slide fixture to balance on hub.
7. Bring cover plate and locknut down onto hub and tighten locknut to secure fixture in place. Make sure hub is oriented 90° to cutout opening, this will ensure that the flat sections on the hub lock in place in the opening in the top housing casting.

Hubbell Lighting, Inc.
A Subsidiary of Hubbell Incorporated
2000 Electric Way
Christiansburg, VA 24073-2500
(703) 382-6111
FAX (703) 382-1526

268-0619-9801

ORIGINAL DRAWING

VAPORGARD™ Incandescent Luminaires

Enclosed and Gasketed

Cl. I, Div. 2, Groups A,B,C,D
Wet Locations
NEMA 3,3R

TYPE G

Wall Mount - VXHT Series

Hub Size	Series	Max Lamp Size	Complete Cat.# with globe/guard	Wall Bracket Mounting Module	Body	Globe	Guard
½″	150	150 watt	VXHT15GP✓	VXT10✓	VXH15✓	G54✓	P50✓
¾″	150	A-21	VXHT25GP✓	VXT20✓	VXH15✓	G54✓	P50✓
½″	200	200 watt	VXHT12GP✓	VXT10✓	VXH12✓	G24✓	P21✓
¾″	200	A-23	VXHT22GP✓	VXT20✓	VXH12✓	G24✓	P21✓
½″	300	300 watt	VXHT13GP✓	VXT10✓	VXH13✓	G34/G251✓	P22✓
¾″	300	PS-25 & PS-30	VXHT23GP✓	VXT20✓	VXH13✓	G34/G251✓	P22✓

Luminaire Components Catalog Nos.

Wall Mount - Adapter Kit

Mounts wall mount VXHT Series to a 4″ Round Box.
Cat. No. VXT-K1

Wall Mount with Junction Box VXHBF Series

Hub Size	Series	Max Lamp Size	Complete Cat.# with globe/guard	Wall Bracket Mounting Module	Body	Globe	Guard	Junction Box
½″	150	150 watt	VXHBF15GP✓	VXT10✓	VXH15✓	G54✓	P50✓	VXF10✓
¾″	150	A-21	VXHBF25GP✓	VXT20✓	VXH15✓	G54✓	P50✓	VXF20✓
½″	200	200 watt	VXHBF12GP✓	VXT10✓	VXH12✓	G24✓	P21✓	VXF10✓
¾″	200	A-23	VXHBF22GP✓	VXT20✓	VXH12✓	G24✓	P21✓	VXF20✓
½″	300	300 watt	VXHBF13GP✓	VXT10✓	VXH13✓	G34/G251✓	P22✓	VXF10✓
¾″	300	PS-25 & PS-30	VXHBF23GP✓	VXT20✓	VXH13✓	G34/G251✓	P22✓	VXF20✓

Stanchion Mount - VXHA Series

Hub Size	Series	Max Lamp Size	Complete Cat.# with globe/guard	Stanchion Mounting Module	Body	Globe	Guard
1 ¼″		150 watt A-21	VXHA45GP✓	VXA4✓	VXH15✓	G54✓	P50✓
1 ¼″		200 watt A-23	VXHA42GP✓	VXA4✓	VXH12✓	G24✓	P21✓
1 ¼″		300 watt PS-25 & PS-30	VXHA43GP✓	VXA4✓	VXH13✓	G34/G251✓	P22✓

✓ – available with Lightning Service™
See Section G for complete details

Copyright© 2002 Cooper Industries, Inc.

VAPORGARD® SERIES LIGHTING FIXTURES

Installation & Maintenance Information

COOPER Crouse-Hinds

IF 101

SAVE THESE INSTRUCTIONS FOR FUTURE REFERENCE

APPLICATION

Vaporgard® Series incandescent clear globe lighting fixtures and fluorescent clear and color globe lighting fixtures are suitable for use in the following hazardous (classified) areas as defined by the National Electrical Code (NEC®) and Canadian Electrical Code (CEC):

- Class I Division 2 Groups A, B, C, D; Class I Zone 2 IIC

This hazardous area suitability applies to vertically mounted fixtures only. **Stanchion mount is suitable for non-hazardous locations only.**

Refer to the fixture nameplate for specific classification information, maximum ambient temperature suitability and corresponding operating temperature (T-numbers).

Vaporgard lighting fixture NEMA/TYPE 3 enclosures are designed for use indoors and outdoors in wet locations, where moisture, dirt, corrosion, vibration and rough usage may be present.

Vaporgard incandescent lighting fixtures are suitable for use on supply voltages to 120V, wiring in accordance with National Electrical Code requirements for medium base lampholders. For applications on 220V nominal systems, suffix /250 indicates that the fixtures are suitable for 250V maximum. Maximum wattage is 300W.

Vaporgard fluorescent (VF series) lighting fixtures are suitable for use on a supply voltage of 120V 60HZ (220V 50hz with suffix /220 50) and with light sources of 5, 7 or 9 watt.

⚠ WARNING

To avoid the risk of fire, explosion or electric shock, this product should be installed, inspected, and maintained by a qualified electrician only, in accordance with all applicable electrical codes.

⚠ WARNING

To avoid electric shock:

- Be certain electrical power is OFF before and during installation and maintenance.
- Fixture must be supplied by a wiring system with an equipment grounding conductor.

To avoid explosion and failure:

- Do not install where the marked operating temperatures exceed the ignition temperature of the hazardous atmospheres.
- Do not operate in ambient temperatures above those indicated on the fixture nameplate.
- Install stanchion mount fixtures in non-hazardous locations only. Stanchion mount Vaporgard lighting is not suitable for hazardous (classified) locations.
- Fixture must be installed with lamp base up, in the vertical position only.
- Make sure supply voltage meets the fixture nameplate voltage requirements.
- Use only the lamp type and wattage specified on the fixture nameplate.
- Use proper supply wiring as specified on the fixture nameplate.
- All gasket seals must be clean.
- Before opening, electrical power to the fixture must be turned off. Keep tightly closed when in operation.

To avoid burning hands:

- Make sure globe and lamp are cool when performing maintenance.

INSTALLATION

(Refer to Diagram A for proper component selection)

MOUNTING

1. Secure the fixture body (mounting module) in its support position – pendant, through feed, ceiling, wall, or stanchion, following methods that comply with the NEC, CEC and any local codes.
2. For pendant and stanchion mount, tighten set screw located in the conduit hub.

WIRING

1. Pendant and through feed fixture bodies are supplied complete with lampholder.
2. Ceiling, wall and stanchion fixture bodies require adding the VXH (VFH for fluorescent) series box mounting body which contains the lampholder.
3. To attach the VXH/VFH (see Figure 1):

- Loosen the two screws on the fixture body.
- Slip the keyhole slots of the VXH/VFH over these two screws. Twist the VXH/VFH clockwise to lock.in place.
- Tighten the two screws.

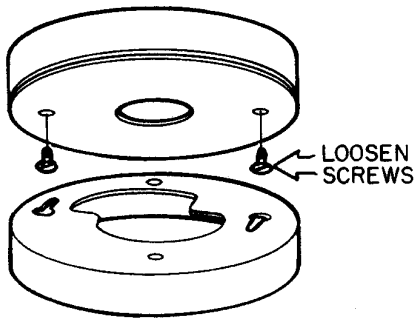

Figure 1

Copyright © 2002, Cooper Industries, Inc.

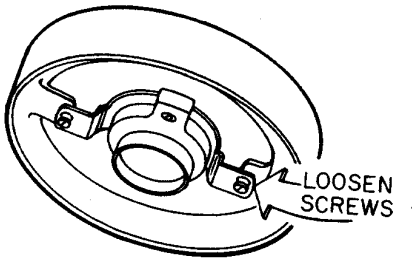

Figure 2

4. Connect supply wires to Vaporgard terminals or wire leads using methods that comply with NEC, CEC and any local codes.
5. Reinstall lampholder and mounting bracket assembly (reverse order of step 4). Make sure all wires are safely above the assembly before tightening the two screws.
6. Install lamp. See LAMP INSTALLATION AND REPLACEMENT section.
7. For fixtures with globe only (less guard), thread globe into fixture body. Hand tighten securely.
8. For fixtures with globe and guard, install as follows:

- 150W max. Incandescent Vaporgard fixture uses an integral guard cat.no. P50. 200W max. Incandescent and Fluorescent Vaporgard fixtures use an integral guard cat.no. P21. Thread segments of both guard and globe are of unequal length (keyed) to insure proper globe and guard thread match upon assembly. The clips that are attached to the guard help secure the guard to the globe. To assemble, align correctly, then push globe and guard together. Thread globe and guard assembly as a unit into the fixture body. Hand tighten securely (see Figure 3).
- 300W max. Incandescent fixture requires a different globe (G251) when the guard cat.no. P22 is used. The guard contains a threaded adapter that holds the globe in place.

  Place the globe inside the guard and thread the guard into the fixture body. Hand tighten securely.

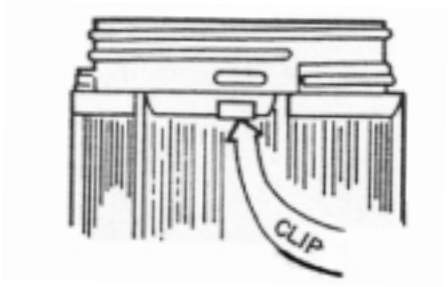

Figure 3

9. Turn power on.

REFLECTOR INSTALLATION

(See Figure 4)

1. Loosen three (3) screws on the reflector.
2. Place reflector on fixture body flange.
3. Securely tighten the three screws.

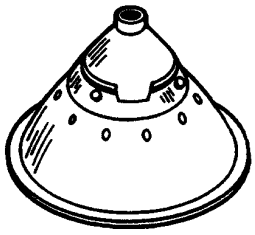

Figure 4

LAMP INSTALLATION AND REPLACEMENT

1. Disconnect power to fixture and allow to cool completely.
2. Unscrew completely the globe (or globe with guard) and set aside.
3. Remove lamp.
4. Perform cleaning and inspection as noted in the MAINTENANCE section.
5. Install the new lamp into lampholder. New lamp must be the identical type as marked on fixture nameplate.

⚠ CAUTION

- To avoid shortened lamp life, lampholder failure, wiring faults or ballast failure tighten or plug in lamp firmly and completely.
- To avoid injury, guard against lamp breakage.

6. Thread globe (or globe with guard) in fixture body and hand tighten securely.

Copyright © 2002, Cooper Industries, Inc.

MAINTENANCE

1. Perform visual, electrical and mechanical inspections on a regular basis. The environment and frequency of use should determine this. However it is recommended that checks be made at least once a year. We recommend an Electrical Preventive Maintenance Program as described in the National Fire Protection Association Bulletin NFPA 70B: Recommended Practice for Electrical Equipment Maintenance (www.nfpa.org).
2. The globe, reflector and guard should be cleaned periodically to insure continued lighting performance. To clean, wipe the reflector, then the guard and globe with a clean damp cloth. If this is not sufficient, use a mild soap or a liquid cleaner such as Collinite NCF or Duco #7. Do not use an abrasive, strong alkaline, or acid cleaner. Damage may result.
3. Visually check for undue heating evidenced by discoloration of wires or other components, damaged parts, or leakage evidenced by water or corrosion in the interior. Replace all worn, damaged or malfunctioning components and clean gasket seals before putting the fixture back into service.
4. Electrically check to make sure that all connections are clean and tight.
5. Mechanically check that all parts are properly assembled.

UL FIXTURE FITTING
VAPORGARD INCANDESCENT AND FLUORESCENT LIGHTING FIXTURE
(Diagram A)

INCANDESCENT LIGHTING FIXTURES

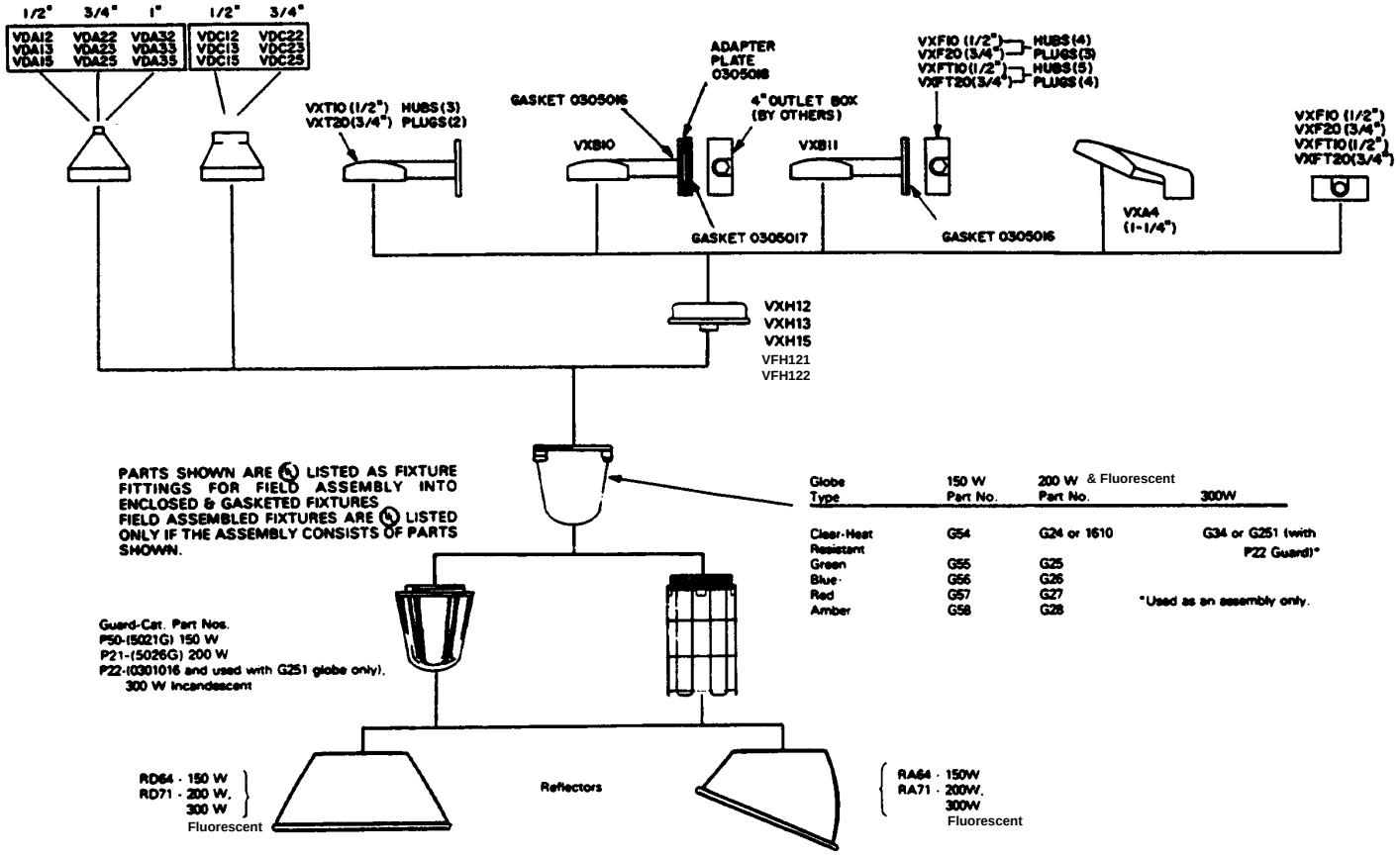

Copyright © 2002, Cooper Industries, Inc.

All statements, technical information and recommendations contained herein are based on information and tests we believe to be reliable. The accuracy or completeness thereof are not guaranteed. In accordance with Crouse-Hinds "Terms and Conditions of Sale", and since conditions of use are outside our control, the purchaser should determine the suitability of the product for his intended use and assumes all risk and liability whatsoever in connection therewith.

COOPER Crouse-Hinds

Cooper Industries Inc.
Crouse-Hinds Division
PO Box 4999, Syracuse, New York 13221 • U.S.A.
Copyright© 2002, Cooper Industries, Inc.

IF 101
Revision 3
Revised 03/02
Supercedes 01/01

Notes:

Job: ROCKWALL
Type: H

110 LINE
111 MINI SCONCE

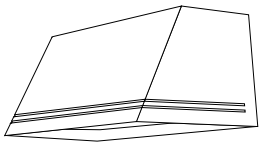

GENERAL DESCRIPTION: The 110 Line combines high output and full cutoff performance with design and construction worthy of landmark architecture. The 111 Mini Sconce mirrors the renowned Gardco 100 Line, with classic styling, intelligent engineering and integrity of construction. Most importantly, this compact luminaire provides full cutoff performance without the high angle brightness associated with refractor type products, making them an attractive choice for controlled illumination at points of entry. Add to this seamless material transitions, flawless finishes and engineering considerate of installation, service and long term operation and one immediately appreciates that size need not compromise quality.

CUTOFF PERFORMANCE: 111 luminaires installed in the normal downlight position, with a flat glass lens, provide full cutoff performance.

ORDERING

PREFIX	DISTRIBUTION	WATTAGE	VOLTAGE	FINISH	OPTIONS
111	WT	T70MH		BRP	F
					PCB

Enter the order code into the appropriate box above. Note: Gardco reserves the right to refuse a configuration. Not all combinations and configurations are valid. Refer to notes below for exclusions and limitations. For questions or concerns, please consult the factory.

PREFIX

111	Trapezoidal Wedge	*Refer to confiiguration chart below for available combinations.*
111EM	Emergency Sconce	
111EMC	Emergency Sconce Cold Temperature	
111EMR	Remote Emergency Sconce	

DISTRIBUTION

FT	Forward Throw	*T6 MH and CMHE types only.*
WT	Wide Throw	*T6 MH and CMHE types only.*
MT	Medium Throw	*Fluorescent and E-17 lamp only.*

WATTAGE AND VOLTAGE

LAMP / VOLTAGE CHART - 111

MT DISTRIBUTION	Voltage					
E17 - HID	120	208	240	277	347	480
50MH	●			●		
70MH	●	●	●	●	●	
35HPS	●					
50HPS	●			●		
70HPS	●	●	●	●	●	
Fluorescent						
26QF[1]	UNIV				●	
32TRF[1]	UNIV				●	
42TRF[1]	UNIV				●	
Incandescent						
INC	●					

Combinations marked with a dot or shown with "UNIV" are available for ordering.

MH Metal Halide
CMHE Ceramic Metal Halide with Electronic Ballast
HPS High Pressure Sodium
QF Quad Tube Fluorescent
TRF Triple Tube Fluorescent

LAMP / VOLTAGE CHART - 111

FT / WT DISTRIBUTION	Voltage					
T Lamps	120	208	240	277	347	480
(T6 Lamps Supplied by Gardco.)						
T39MH	●			●		
T70MH	●	●	●	●	●	
T39CMHE[1]	UNIV					
T70CMHE[1]	UNIV					

1. *Fluorescent and CMHE luminaires feature electronic ballasts that accept 120V through 277V, 50hz to 60hz, input. Specify "UNIV" voltage for 120V through 277V.*
2. *Not Available in 111EM or 111EMC.*

CONFIGURATION CHART - 111EM, 111EMC, OR 111EMR

	Distribution			Voltage					
Fluorescent	FT	WT	MT	120	208	240	277	347	480
26QF			●	●			●		
32TRF			●	●			●		
42TRF[2]			●	●			●		

FINISH

BRP	Bronze Paint
BLP	Black Paint
WP	White Paint
NP	Natural Aluminum Paint
BGP	Beige Paint
OC	Optional Color Paint *Specify Optional Color or RAL ex: OC-LGP or OC-RAL7024.*
SC	Special Color Paint *Specify. Must supply color chip.*

OPTIONS

F	Fusing *120V through 277V only. N/A with Incandescent.*
PCB	Button Type Photocontrol *Not available with 111EM.*
SL	Solite® Diffusing Lens
WLU	Wet Location Door for Inverted Mounting *Not available with WG option.*
WG	Wire Guard *Not available with WLU option.*
WS	Wall Mounted Box for Surface Conduit *Rear entry permitted.*

EMR Luminaires Only:

B84CG	Bodine Emergency Battery Pack *Emergency Battery Packs for EMR types MUST be ordered with luminaires and supplied by Gardco.*

Gardco Lighting 1611 Clovis Barker Road San Marcos, TX 78666 (800) 227-0758 (512) 753-1000 FAX: (512) 753-7855 www.sitelighting.com
© Copyright 2008 Philips Group. All Rights Reserved. International Copyright Secured. Gardco Lighting reserves the right to change materials or modify the design of its product without notification as part of the company's continuing product improvement program.
79115-97/0708

110 LINE
111 MINI SCONCE

SPECIFICATIONS

GENERAL: Each Gardco 111 luminaire is a wall mounted cutoff luminaire for high intensity discharge, compact fluorescent or incandescent lamps. Internal components are totally enclosed in a rain-tight, dust-tight and corrosion resistant housing. The housing, back plate and door frame are die cast aluminum. A choice of three (3) optical systems is available. Luminaires are suitable for wet locations (damp locations if inverted).

HOUSING: Single-piece soft trapezoidal housings are die cast aluminum. A memory retentive gasket seals the housing with the doorframe to exclude moisture, dust, insects and pollutants from the optical system. A black, die cast ribbed backplate dissipates heat for longer lamp and ballast life.

DOOR FRAME: A single-piece die cast aluminum door frame integrates to the housing form. The door frame is hinged closed and secured to the housing with two (2) captive stainless steel fasteners. The heat and impact resistant 1/8" (.32cm) tempered glass lens and one-piece gasket are mechanically secured to the door frame.

OPTICAL SYSTEMS: Reflectors are composed of specular extruded and faceted components, electropolished, anodized and sealed. Reflector segments are set in arc tube image duplicating patterns to achieve the wide throw, forward throw or medium throw distributions.

ELECTRICAL: Standard Luminaires: Each high power factor HID core and coil or electronic ballast is capable of providing reliable lamp starting down to -20°F/-29°C. Component-to-component wiring within the luminaire will carry no more than 80% of rated current and is listed by UL for use at 600 VAC at 302°F/150°C or higher. Plug disconnects are listed by UL for use at 600 VAC, 15A or higher.

Standard fluorescent units have a starting temperature of 0°F/-18°C. Standard fluorescent ballasts are high power factor electronic solid state.

EM and EMC Luminaires: In the event of power interruption, integral battery pack will power (1) 32W or (1) 26W compact fluorescent lamp at reduced light levels for a minimum of 90 minutes. Maintenance free battery is rated for ambient temperatures down to 32°F/0°C (EM) or -4°F/-20°C (EMC). Indicator light is visible through the lens. A test switch is accessible through the door assembly. EM and EMC units do not bear CUL label.

EMR Luminaires: A 7.5'/2.29m, 12 wire, quick disconnect assembly is provided for wiring through conduit (by others) to a Bodine B84CG fluorescent emergency battery pack. The fluorescent emergency battery pack MUST be supplied by Gardco. The B84CG option is required to be on the order to the factory.

In the event of power interruption, the B84CG remote battery pack will power (1) 42W, (1) 32W, or (1) 26W compact fluorescent lamp at at reduced light levels for a minimum of 90 minutes.

Maintenance free battery is rated for ambient temperatures down to 32°F/0°C. Minimum luminaire starting temperature is 0°F/-18°C. Indicator light is visible through the lens. A test switch is accessible through the door assembly. NOTE: B84CG does not bear CUL label.

LAMPHOLDER: Pulse rated medium base sockets are glazed porcelain with nickel plated screw shell. T6 lamps use a G12 base, pulse rated porcelain sockets. Fluorescent sockets are high temperature PBT with brass contacts.

FINISH: Each standard color luminaire receives a fade and abrasion resistant, electrostatically applied, thermally cured, triglycidal isocyanurate (TGIC) textured polyester powdercoat finish. Standard colors include bronze (BRP), black (BLP), white (WP), natural aluminum (NP) and beige (BGP). Consult factory for specs on custom colors.

LABELS: All luminaires bear either UL or CUL (where applicable) Wet Location labels. Lens down application is Wet Location and lens up is Damp Location, except when using the optional inverted Wet Location components.

FULL CUTOFF PERFORMANCE: Full cutoff performance means a luminaire distribution where zero candela intensity occurs at an angle of 90° above nadir. Additionally, the candela per 1000 lamp lumens does not numerically exceed 100 (10 percent) at a vertical angle of 80° above nadir. This applies to all lateral angles around the luminaire.

CUTOFF PERFORMANCE: Cutoff performance means a luminaire distribution where the candela per 1000 lamp lumens does not numerically exceed 25 (2.5 percent) at an angle at or above 90° above nadir, and 100 (10 percent) at a vertical angle of 80° above nadir. This applies to all lateral angles around the luminaire.

DIMENSIONS

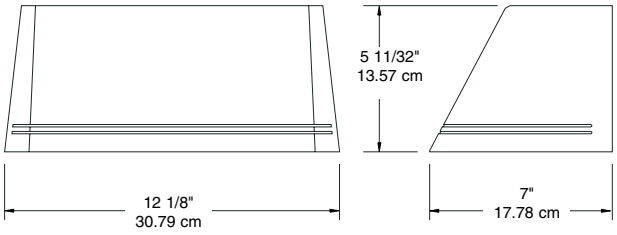

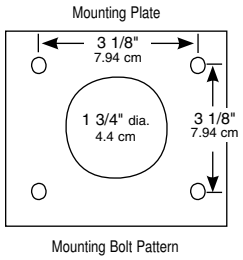

Note: Mounting plate center is located in the center of the luminaire width and 2.38" (6.03cm) above the luminaire bottom (lens down position). Splices must be made in the J-box (by others). Mounting plate must be secured by max. 5/16" (.79cm) diameter bolts (by others) structurally to the wall.

Gardco Lighting 1611 Clovis Barker Road San Marcos, TX 78666 (800) 227-0758 (512) 753-1000 FAX: (512) 753-7855 www.sitelighting.com
© Copyright 2008 Philips Group. All Rights Reserved. International Copyright Secured. Gardco Lighting reserves the right to change materials or modify the design of its product without notification as part of the company's continuing product improvement program.
79115-97/0708

INSTALLATION INSTRUCTIONS

PERFORMANCE SCONCE 111

IMPORTANT: READ ALL INSTRUCTIONS BEFORE PERFORMING ANY WORK. BE SURE ALL POWER IS OFF PRIOR TO INSTALLING LUMINAIRE.

WARNING: LUMINAIRE MUST BE GROUNDED IN ACCORDANCE WITH APPROPRIATE CODES. FAILURE TO DO SO MAY RESULT IN SERIOUS INJURY.

STANDARD INSTALLATION

NOTE: MOUNTING BRACKET MAY BE SECURED TO WALL WITH UP TO 1/4" DIA. BOLTS OR SCREWS (BY OTHERS).

STRUCTURAL MEMBERS MUST BE PRESENT IN WALL TO ACCEPT BOLTS OR SCREWS.

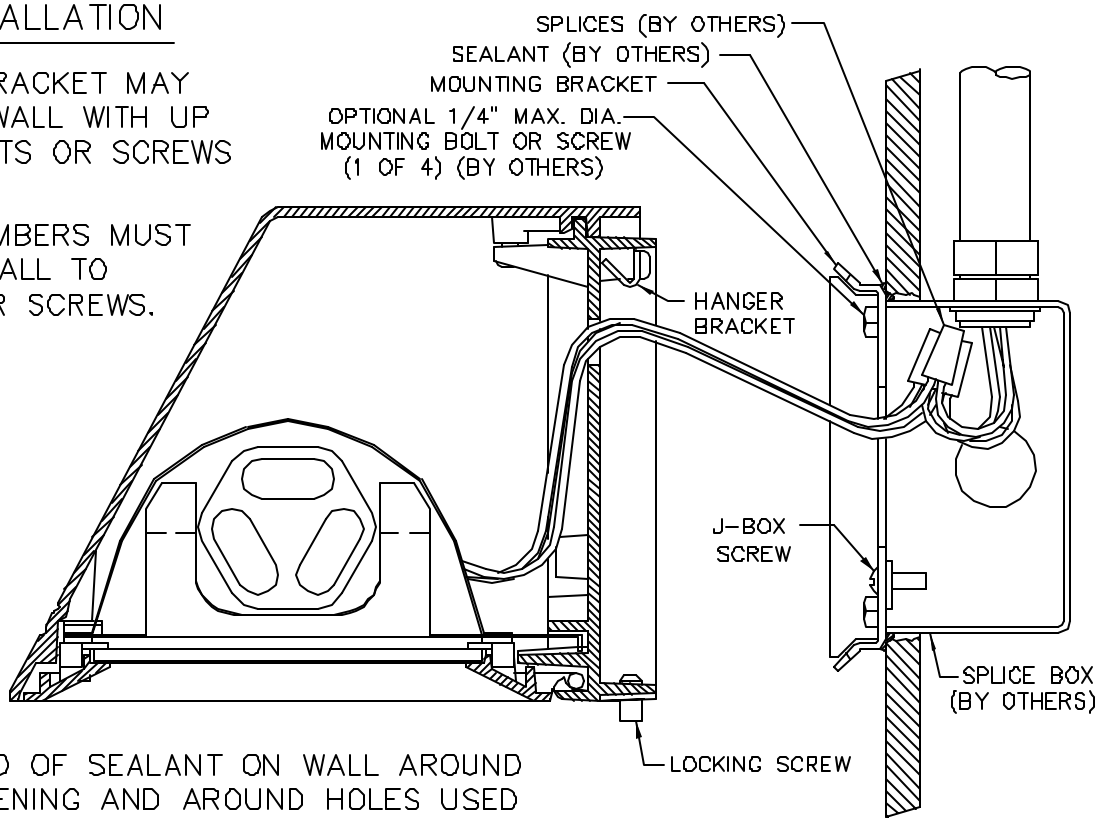

1. APPLY A BEAD OF SEALANT ON WALL AROUND SPLICE BOX OPENING AND AROUND HOLES USED FOR OPTIONAL MOUNTING BOLTS OR SCREWS.
   WHEN USING A 4" OCTAGONAL BOX (SHOWN), FILL GAP BETWEEN WALL OPENING AND SPLICE BOX WITH SEALANT.
   APPLY SEALANT TO THE TOP INSIDE CORNERS OF THE MOUNTING BRACKET.

2. PLACE MOUNTING BRACKET OVER SPLICE BOX AND SECURE WITH J-BOX SCREWS.
   FOR ADDITIONAL SECURITY, BOLTS OR SCREWS UP TO 1/4" DIAMETER MAY BE USED.

3. MAKE ELECTRICAL CONNECTIONS. FIXTURE LINE TO SUPPLY LINE, COMMON TO COMMON AND GROUND TO GROUND.

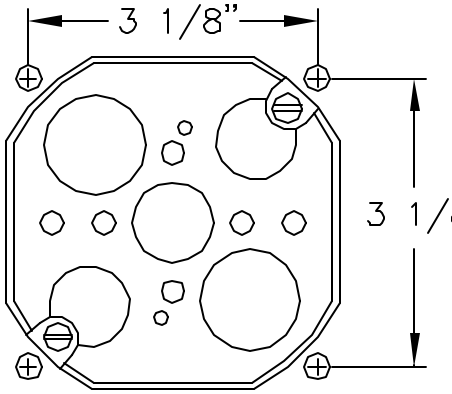

MOUNTING PATTERN FOR OPTIONAL BOLTS

4" OCTAGONAL BOX (BY OTHERS) SHOWN FOR REFERENCE

Gardco Emco mcPhilben
OUTDOOR LIGHTING
2661 ALVARADO ST.
SAN LEANDRO, CA 94577

~~SC297~~

4. PLACE SPLICES AND EXCESS WIRE IN SPLICE BOX. CAREFULLY ENGAGE HANGER BRACKET TO MOUNTING BRACKET BEING CAREFULL NOT TO PINCH WIRES. ALLOW FIXTURE TO REST AGAINST WALL. TIGHTEN LOCKING SCREWS.
5. UNSCREW LENS FRAME SCREWS, OPEN FRAME, INSTALL LAMP,CLOSE AND SECURE FRAME BEING CAREFULL NOT TO OVER TIGHTEN THE SCREWS.

Cardco Emco mcPhilben
OUTDOOR LIGHTING
2891 ALVARADO ST.
SAN LEANDRO, CA 94577

HOLOPHANE
LEADER IN LIGHTING SOLUTIONS

WA

Angled Wraparound

APPLICATIONS

The WA series angled wraparound fixtures are designed to provide a highly efficient light source for stairwells, bathrooms, corridors, or other areas where both vertical and horizontal lighting tasks need to be simultaneously serviced from a common wall location.

FEATURES

The face of the fixture is angled at 45 degrees from vertical, thus providing excellent horizontal and vertical illumination. WA fixtures can also be effectively used for selected indirect lighting applications by pointing the face of the fixture upward toward the ceiling.

WA series fixtures are available in 2', 4', and 8' nominal lengths. The housing profile extends 6.6" from mounting location, with a fixture depth of 6.6". The face of the fixture measures 8.4" across.

SPECIFICATIONS

HOUSING: Cold rolled, pre-painted steel housing is rigid and fully assembled with rivets.

REFLECTOR: Material is Miro® enhanced specular aluminum with a total reflectivity of 95%.

DIFFUSER: Prismatic wraparound virgin acrylic lens contains 50% DR acrylic for superior resistance to breakage.

MOUNTING: The WA series fixture is suitable for surface mounting to a wall, pointing either upward or downward as required by the application.

LAMPHOLDERS: T8 lamps are secured with locking lampholders.

PHOTOMETRY

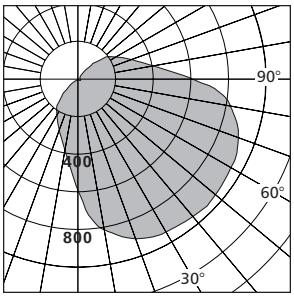

WASN4XNACLO40
Test #11722
Fixture Efficiency: 86.1%

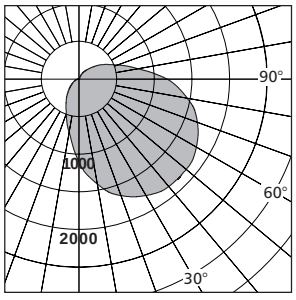

WASN4XNACLO42
Test #11723
Fixture Efficiency: 76.3%

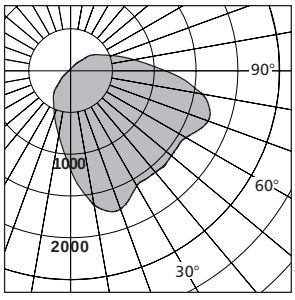

WASN4XSACLO42
Test #11725
Fixture Efficiency: 75.3%

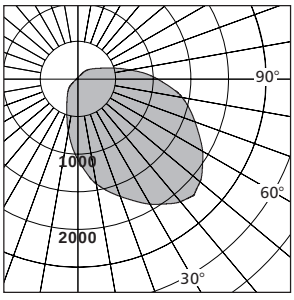

WASN4XTACLO42
Test #11721
Fixture Efficiency: 79.8%

©2002 Acuity Lighting Group, Inc.

CROSS SECTIONS

1 Lamp Profile

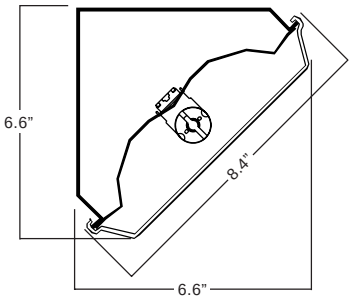

2 Lamp Profile

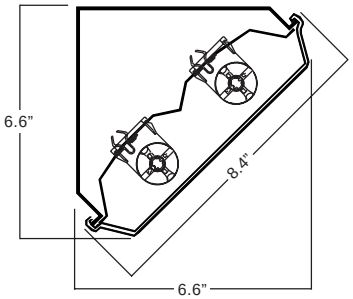

Drawings for dimensional detail only. Subject to change without notice.

MODELS AVAILABLE

Fixture Schedule										Fixture ID#	
	WA	S	N2	X	N	ACL	020	EP	1	U	I

Tandem Option
2 - Tandem of 2

Fixture Series

Housing
S - 22 gauge
T - 20 gauge

Size
N2 - 2′
N4 - 4′
N8 - 8′

Photometry
N - Normal
S - Spread
T - Task

Lamp Configuration
O40 - 1 F32T8*
O42 - 2 F32T8*
O41 - 2 F32T8**
O45 - 4 F32T8**

Ballast Type
EP - Standard electronic
LP - Low-power electronic
MP - Medium-power electronic
YP - High-power electronic

Ballast Quantity
1
2

Ballast Voltage
1 - 120V
2 - 277V
3 - 347V

*Available with 4′ fixture only. **Available with 8′ fixture only.
Not all ballast types and quantities available with every lamp configuration.
For additional ballast options please see the ballast selection matrix sheet.

HOLOPHANE
LEADER IN LIGHTING SOLUTIONS
An AcuityBrands Company

Holophane. Acuity Lighting Group, Inc. 214 Oakwood Ave., Newark, OH 43055 / Holophane Canada, Inc. 9040 Leslie Street, Units 8 and 9, Richmond Hill, ON L4B 3M4 / Holophane Europe Limited, Bond Ave., Milton Keynes MK1 1JG, England / Holophane, S.A. de C.V., Apartado Postal No. 986, Naucalpan de Juarez, 53000 Edo. de Mexico

Contact your local Holophane sales representative for application assistance, computer-aided design and cost studies. For information on other Holophane products and systems, call the Inside Sales Service Department at 740-345-9631. In Canada, call 905-707-5830 or fax 905-707-5695.

HOLOPHANE
LEADER IN LIGHTING SOLUTIONS

HW

Specification Grade Wraparound Narrow Housing

APPLICATIONS

The HW series wraparound fixtures are designed to provide maximum efficiency general lighting for institutional, industrial, and retail environments.

FEATURES

The HW fixture series is available in 4′ and 8′ nominal lengths. The narrow housing profile is 4.8″ with a fixture depth of 4.6″.

The lens assembly is secured to the fixture body by spring-loaded barrel latches. The lens can be hinged from either side by releasing two latches or can easily be removed for cleaning and maintenance.

Injection molded clear virgin acrylic lens provides an uplight component for ceiling illumination.

Fixture is shipped fully assembled and ready to install.

SPECIFICATIONS

HOUSING: Cold rolled, pre-painted steel housing is rigid and fully assembled with rivets.

DIFFUSER: Holophane injection-molded clear virgin acrylic lens. Bottom surface is covered by two strips of transverse prisms separated by one strip of conical prisms. Side walls have horizontal light-splitting prisms on the inside and vertical prisms and flutes on the outside.

MOUNTING: The HW series fixture is suitable for surface mounting as well as for suspended mounting with stems, threaded rods or chains.

LAMPHOLDERS: T8 lamps are secured with locking lampholders.

PHOTOMETRY

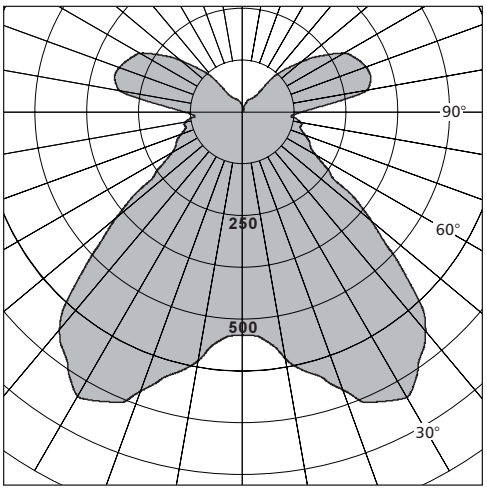

HWSN4DSH61O40
Test #48008
Fixture Efficiency: 84.3%
SC Across: 1.8, SC Along: 1.3

©2002 Acuity Lighting Group, Inc.

CROSS SECTION

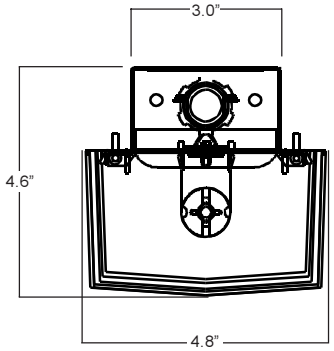

CHANNEL DIMENSIONS

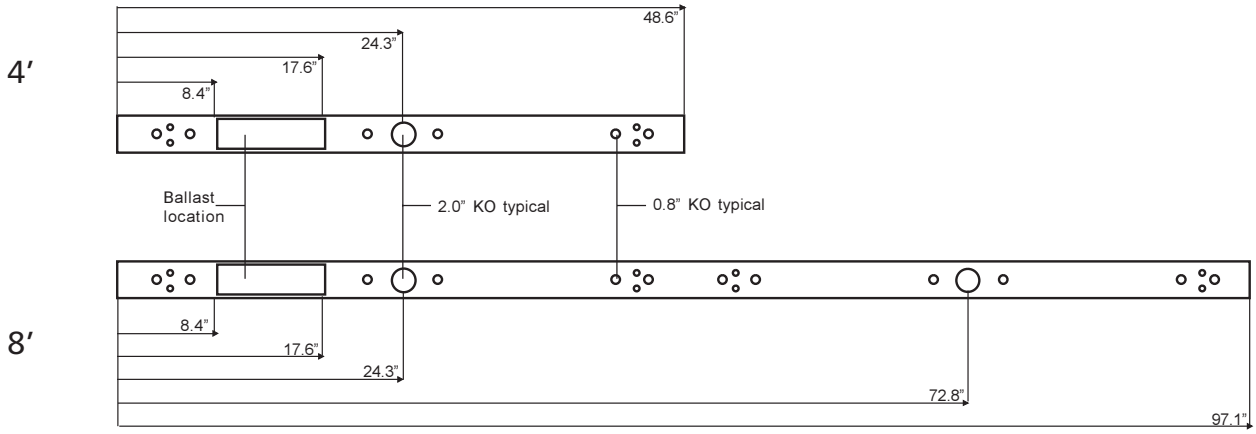

Drawings for dimensional detail only. Subject to change without notice.

MODELS AVAILABLE

Fixture Schedule

Fixture ID# J

	HW	S	N	4	D	S	H61	040	EP	1	U

Fixture Series

Size
4 - 4′
8 - 8′

Lamp Configuration
O40 - 1 F32T8*
O41 - 2 F32T8**

Ballast Quantity
1
2

Ballast Voltage
1 - 120V
2 - 277V
3 - 347V
U - 120V/277V

Tandem Option
2 - Tandem of 2

Housing
S - 22 gauge
T - 20 gauge

Ballast Type
EP - Standard electronic
LP - Low-power electronic
MP - Medium-power electronic
YP - High-power electronic

*Available with 4′ fixture only. **Available with 8′ fixture only.
Not all ballast types and quantities available with every lamp configuration.
For additional ballast options please contact your local Holophane sales representative.

HOLOPHANE
LEADER IN LIGHTING SOLUTIONS
An AcuityBrands Company

Holophane. Acuity Lighting Group, Inc. 214 Oakwood Ave., Newark, OH 43055 / Holophane Canada, Inc. 9040 Leslie Street, Units 8 and 9, Richmond Hill, ON L4B 3M4 / Holophane Europe Limited, Bond Ave., Milton Keynes MK1 1JG, England / Holophane, S.A. de C.V., Apartado Postal No. 986, Naucalpan de Juarez, 53000 Edo. de Mexico

Contact your local Holophane sales representative for application assistance, computer-aided design and cost studies. For information on other Holophane products and systems, call the Inside Sales Service Department at 740-345-9631. In Canada, call 905-707-5830 or fax 905-707-5695.

Magnuspec

MSS Series

Magnuspec™

The compact MSS Magnuspec Series is a versatile performer. Voltages range from 70-175 watt and all IES distributions are available from segmented reflectors. Applications include mounting heights from 8-20 feet covering parking, walkways, parks, canopies and parking garages.

Dimensions

Arm/Ceiling Mount

	A	B	EPA	Weight
MSS	8.0"	16.25"	1.2 ft.²	25lbs
	203 mm	413 mm	0.1 m²	11.3kg

Garage Mount

	A	B	C	EPA	Weight
MSS	21.625" - 24"	17.0"	16.25"	1.2 ft.²	25lbs
	549-607 mm	432 mm	413 mm	0.1 m²	11.3kg

Yoke Mount

	A	B	C	D	EPA	Weight
MSS	5.125"	19.25"	19.25"	11.25"	1.2 ft.²	39lbs
	131 mm	489 mm	489 mm	286 mm	0.1 m²	19.5kg

EPA and weight values do not include mounting arm.
Drop lens adds 0.35 EPA.

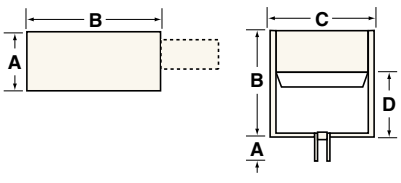

Features

Housing - *Square, one-piece formed aluminum housing with smooth wall construction.*

Door - *Extruded aluminum door frame with silicone gasketing and tool-less, die-cast zinc latches. Flat glass and dropped acrylic or polycarbonate lens types available.*

Optics - *Reflector system made form multifaceted segmented panels. Flat glass horizontal lamp unit offers Type I, III, IV and V Square distributions. Flat glass vertical lamp units provide Type V distributions. Vertically lamped drop lens units offer Type V distributions. Tool-free rotatable optics.*

Mounting - *Extruded arm, yoke and garage-type mounting available for design flexibility.*

Electrical - *Pulse rated medium base porcelain sockets for ED-17 lamps. CWA type ballast, 60 Hz HPF, starting rated at -20°F (-40°F HPS). 50 Hz available, consult factory. Removable Powr-Panl® ballast tray.*

Finish - *Durable Lektrocote® TGIC thermoset polyester powder paint finish assures long life and maintenance-free operation.*

UL listed and CSA certified for outdoor use in wet locations.

Garage mount is damp location listed.

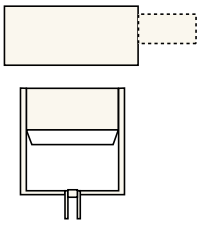

Luminaire Logic

1	2	3	4	5	6	7	8
MSS Series	**A** Mount	**100S** Wattage/ Source	**3** Ballast	**V** Lamp Ornt./Distrb.	**6** Volts	**4** Color	**PCR1** Options

1 Series

MSS	Magnuspec

2 Mounting

A	Arm Mount (arm not included, order separately)[1]
C	Ceiling
G	Garage
Y	Yoke Mount (2.375" tenon)

3 Wattage/Source

Metal Halide	
070H	70W (ED-17)
100H	100W (ED-17)
175H	175W (ED-17)
High Pressure Sodium	
070S	70W (ED-17)
100S	100W (ED-17)
150S	150W (ED-17)

4 Ballast Type

3	Powr-Panl®

5 Lamp Orientation/Distribution

I	Type I (Horizontal)
P	Type III (Horizontal)[2]
T	Type IV (Horizontal)
W	Type V (Horizontal)
V	Type V (Vertical)
A	Drop Acrylic Type V (Vertical)
L	Drop Polycarbonate Type V (Vertical)

6 Voltage

8	Quad-Tap® (120, 208, 240, 277V)[3]
5	480V[4]
6	Tri-Tap® (120, 277, 347V)[3]
E	220/240V 50 Hz[5]
0	No Ballast

7 Color

1	Dark Bronze
2	Black
4	White
3	Gray
P	Platinum Silver
R	Red (Premium Color)
7	Forest Green (Premium Color)

8 Options

Fusing	
F1	120V
F2	208V
F3	240V
F4	277V
F5	480V
F6	347V
Photo Cell Receptacle	
PCR1	120V
PCR2	208V
PCR3	240V
PCR4	277V
PCR5	480V
PCR6	347V
L	Lamp

[1] Use #4 drill pattern when ordering poles and brackets.
[2] Field adjustable to Type II.
[3] Factory wired for highest voltage unless specified.
[4] Not available in 70 and 100W metal halide.
[5] 175H and 150S only.

Accessories

MAS-4-X
Four inch rigid arm for flat surfaces.
MAS-10-X
Ten inch rigid arm for flat surfaces (required for 90° configurations).
RSD-44-X
Nominal 4" OD round pole adapter for MAS arms.
RSD-55-X
Nominal 5" OD round pole adapter for MAS arms.
MSS-90-X
2.375" to 3" OD tenon slipfitter drilled for MAS arms.
MAS-FM
Flush mount hardware for #4 drill pattern (required when no arm used on pole).
DS-WP-X
Wall plate for flush or arm mounting fixtures with #4 drill pattern.
MAS-K-X
2.375" OD tenon slipfitter with adjustable arm for single fixture.
MAS-TK-X
2.375" OD tenon slipfitter with adjustable arm for two fixtures.
MSS-SPC
.125" polycarbonate sheet suspended 3" below door frame.

Note: Replace the X with a color selection. For photocontrol equipment, see page 81.

Poles-SSS Square Straight Steel

- *Square Straight Steel Shaft*
- *One-piece construction*
- *Side, Tenon, or Pad mounting available*
- *Ground lug standard*
- *Galvanized anchor bolts and template included (4-bolt design)*
- *Base cover standard (Square)*
- *Gasketed hand hole cover standard*
- *Lektrocote finish standard*
- *CSA certification available*

TYPE K POLE
SSS-20-40-1-A4-DB

Catalog Number	Pole Ht. ft	Pole Ht. m	Nominal Shaft Dim.	Wind Load Rating[1] 70 MPH	80 MPH	90 MPH	100 MPH	120 MPH	Wall Thick.	Bolt Circle (Sug.)	Bolt Circle	Bolt Sq.	Base Plate (sq.)	Anchor Bolt Size	Bolt Proj.	Pole Wt (lbs)
SSS-10-40-1-XX-XX	10	3.0	4	38	28.5	22	17	11	.119	11"	8 - 11"	5.6 - 7.8"	10.25 x 0.75"	.75 x 30 x 3"	4"	91
SSS-10-50-1-XX-XX	10	3.0	5	60	46	36	28	19	.119	11"	10 - 13.5"	7.1 - 9.5"	12 x 1"	.75 x 30 x 3"	4"	106
SSS-12-40-1-XX-XX	12	3.7	4	28	21	15	12	7.5	.119	11"	8 - 11"	5.6 - 7.8"	10.25 x 0.75"	.75 x 30 x 3"	4"	104
SSS-12-50-1-XX-XX	12	3.7	5	45	33	25	20	13	.119	11"	10 - 13.5"	7.1 - 9.5"	12 x 1"	.75 x 30 x 3"	4"	122
SSS-14-40-1-XX-XX	14	4.3	4	23	17	12.5	9.5	6	.119	11"	8 - 11"	5.6 - 7.8"	10.25 x 0.75"	.75 x 30 x 3"	4"	116
SSS-14-40-7-XX-XX	14	4.3	4	34.5	25.5	20	15	9.5	.179	11"	8.5 - 12"	6 - 8.4"	11 x 1"	.75 x 30 x 3"	4"	158
SSS-14-50-1-XX-XX	14	4.3	5	38	28.5	21.5	16.5	10.5	.119	11"	10 - 13.5"	7.1 - 9.5"	12 x 1"	.75 x 30 x 3"	4"	138
SSS-16-40-1-XX-XX	16	4.9	4	19.5	14	10.5	7.5	4	.119	11"	8 - 11"	5.6 - 7.8"	10.25 x 0.75"	.75 x 30 x 3"	4"	128
SSS-16-40-7-XX-XX	16	4.9	4	29.5	21.5	16	12	8	.179	11"	8.5 - 12"	6 - 8.4"	11 x 1"	.75 x 30 x 3"	4"	176
SSS-16-50-1-XX-XX	16	4.9	5	32	23.5	17.5	13.5	8	.119	11"	10 - 13.5"	7.1 - 9.5"	12 x 1"	.75 x 30 x 3"	4"	153
SSS-16-50-7-XX-XX	16	4.9	5	47.5	35.5	27	21.5	13.5	.179	11"	10 - 13.5"	7.1 - 9.5"	12 x 1"	.75 x 30 x 3"	4"	214
SSS-18-40-1-XX-XX	18	5.5	4	16.5	11.5	8.5	6	3	.119	11"	8 - 11"	5.6 - 7.8"	10.25 x 0.75"	.75 x 30 x 3"	4"	147
SSS-18-40-7-XX-XX	18	5.5	4	25.5	18	13.5	10.5	6	.179	11"	8.5 - 12"	6 - 8.4"	11 x 1"	.75 x 30 x 3"	4"	201
SSS-18-50-1-XX-XX	18	5.5	5	27.5	20	14	11	6	.119	11"	10 - 13.5"	7.1 - 9.5"	12 x 1"	.75 x 30 x 3"	4"	175
SSS-18-50-7-XX-XX	18	5.5	5	42	31	23.5	18	11	.179	11"	8.5 - 12"	6 - 8.4"	12 x 1"	.75 x 30 x 3"	4"	243
SSS-20-40-1-XX-XX	20	6.1	4	13.5	9.5	6.5	4.5	1.8	.119	11"	8 - 11"	5.6 - 7.8"	10.25 x 0.75"	.75 x 30 x 3"	4"	160
SSS-20-40-7-XX-XX	20	6.1	4	22	16	11.5	8.5	4.5	.179	11"	8.5 - 12"	6 - 8.4"	11 x 1"	.75 x 30 x 3"	4"	173
SSS-20-50-1-XX-XX	20	6.1	5	23.5	17	12	9	4.5	.119	11"	10 - 13.5"	7.1 - 9.5"	12 x 1"	.75 x 30 x 3"	4"	191
SSS-20-50-7-XX-XX	20	6.1	5	36.5	27	20	15.5	9	.179	11"	10 - 13.5"	7.1 - 9.5"	12 x 1"	.75 x 30 x 3"	4"	266
SSS-20-60-7-XX-XX	20	6.1	6	51	38	28.5	22	14.5	.179	12"	11 - 13.5"	7.8 - 9.5"	12 x 1"	1 x 36 x 4"	4"	312
SSS-25-40-1-XX-XX	25	7.6	4	8.5	5	3	1.5	NR	.119	11"	8 - 11"	5.6 - 7.8"	10.25 x 0.75"	1 x 36 x 4"	4"	238
SSS-25-40-7-XX-XX	25	7.6	4	14.5	10	6.5	4.5	1.4	.179	11"	8.5 - 12"	6 - 8.4"	11 x 1"	1 x 36 x 4"	4"	266
SSS-25-50-1-XX-XX	25	7.6	5	15	10.5	6.5	4	NR	.119	11"	10 - 13.5"	7.1 - 9.5"	12 x 1"	1 x 36 x 4"	4"	231
SSS-25-50-7-XX-XX	25	7.6	5	25	18	12.5	8.5	4	.179	11"	10 - 13.5"	7.1 - 9.5"	12 x 1"	1 x 36 x 4"	4"	324
SSS-25-50-3-XX-XX	25	7.6	5	36.5	26	19	14	8	.250	11"	10 - 13.5"	7.1 - 9.5"	12 x 1"	1 x 36 x 4"	4"	437
SSS-25-60-7-XX-XX	25	7.6	6	38.5	28	20.5	15	8	.179	12"	11 - 13.5"	7.8 - 9.5"	12 x 1"	1 x 36 x 4"	4"	404
SSS-27-40-7-XX-XX	27	8.2	4	-	9.4	-	4.2	1.2	.179	11"	8.5 x 12"	6 - 8.4"	11 x 1"	1 x 36 x 4"	4"	290
SSS-30-40-7-XX-XX	30	9.1	4	6.5	4.5	2.5	1.5	NR	.179	11"	8.5 x 12"	6 - 8.4"	11 x 1"	1 x 36 x 4"	4"	313
SSS-30-50-1-XX-XX	30	9.1	5	7.5	5.5	2.5	NR	NR	.119	11"	10 - 13.5"	7.1 - 9.5"	12 x 1"	1 x 36 x 4"	4"	274
SSS-30-50-7-XX-XX	30	9.1	5	18	12	8	4.5	NR	.179	11"	10 - 13.5"	7.1 - 9.5"	12 x 1"	1 x 36 x 4"	4"	398
SSS-30-50-3-XX-XX	30	9.1	5	22	16	13	8	3.8	.250	11"	10 - 13.5"	7.1 - 9.5"	12 x 1"	1 x 36 x 4"	4"	537
SSS-30-60-7-XX-XX	30	9.1	6	30	20	14	9	3.4	.179	12"	11 - 13.5"	7.8 - 9.5"	12 x 1"	1 x 36 x 4"	4"	467
SSS-30-60-3-XX-XX	30	9.1	6	42	30	22	16	8	.250	12"	11 - 13.5"	7.8 - 9.5"	12 x 1"	1.25 x 42 x 6"	4"	630
SSS-35-60-7-XX-XX	35	10.7	6	20.5	13	8	4.5	NR	.179	12"	11 - 13.5"	7.8 - 9.5"	12 x 1"	1 x 36 x 4"	4"	538
SSS-35-60-3-XX-XX	35	10.7	6	26	18	12	7.5	3.4	.250	12"	11 - 13.5"	7.8 - 9.5"	12 x 1"	1.25 x 42 x 6"	4"	726
SSS-40-60-7-XX-XX	40	12.2	6	11	8	3.5	NR	NR	.179	12"	11 - 13.5"	7.8 - 9.5"	12 x 1"	1 x 36 x 4"	4"	614
SSS-40-60-3-XX-XX	40	12.2	6	14	10.5	5.5	2.5	NR	.250	12"	11 - 13.5"	7.8 - 9.5"	12 x 1"	1.25 x 42 x 6"	4"	802

[1] Allowable EPA with 1.3 gust factor. To determine max. pole loading weight, multiply allowable EPA by 30 lbs.

Note Factory supplied template must be used when setting anchor bolts. Hubbell Lighting will deny any claim for incorrect anchorage placement resulting from failure to use factory supplied template and anchor bolts.

Pole Logic

1	2	3	4	5	6	7	8
S Cross Section	**S** Style	**S** Material	**25** Nominal Length	**40** Nominal Shaft Dia.	**1** Shaft Thickness	**A1** Mount Type	**DB** Finish

Luminaire Mounting Type

AX	Side - Single[1]
BX	Side - Double at 90°[1]
CX	Side - Double at 180°[1]
DX	Side - Triple at 90°[1]
FX	Side - Quad at 90°[1]
P1	Pad Mount - Spider Type
P2	Pad Mount - Yoke Type
P3	Pad Mount - Yoke Type (Proformer XL only)
TA	Tenon (2.375" OD)
TB	Tenon (2.875" OD)
TR	Removable Tenon (2.375 x 4.25)[2]
CD	Concord Luminaire
OT	No drilling (includes pole cap)

Finish

DB	Dark Bronze
BL	Black
WH	White
GR	Gray
PS	Platinum Silver
RD	Red (Premium Color)
FG	Forest Green (Premium Color)
CC	Custom Color (Consult Factory)
PR	Primer Only

Options

Q55	Internal Coating (Hubbell Seal)
Q18	15 Amp GFCI Receptacle and Cover[3]
Q22	Extra Handhole[3]
Q26	.5" Coupling[3]
Q27	.75" Coupling[3]
Q30	2" Coupling[3]
Q32	Mid-pole Luminaire Bracket[3]
Q40	Vibration Damper
LAB	Less Anchor Bolts
CSA	CSA Certified (consult factory)

[1] DRILL PATTERNS: Replace X with 1 = Spaulding luminaires with a straight pole (4-bolt), 2 = Cimarron CR1 and Raven Series luminaires. 4 = MSS & DS luminaires, 5 = Spaulding Detroit III luminaires, 6 = MSV, RCS, RCL & DM luminaires

[2] Removable tenon used in conjunction with side arm mounting. First specify desired arm configuration followed by the "TR" notation. **Example**: SSS-25-40-7-C6-TR-DB

[3] Specify option location using logic found in pole introduction pages.

Floodlights for 1000W high output H.I.D. lamps

Highly efficient floodlights utilizing Metal Halide, Ceramic Metal Halide and High Pressure Sodium light sources from 150W through 1000W. By selecting a clear or spread lens combined with clear or coated lamps a variety of beam patterns can be obtained for special lighting effects.

Housing: Two piece die cast aluminum consisting of a reflector housing with integral yoke mounting flanges and a separate cylindrical ballast housing with integral cooling fins. Ballast housing is secured to reflector housing by two (2) stainless steel latches which allow easy access to the ballast and lamp focusing screws.

Lamp enclosure: One piece die cast aluminum with integral drainage slots. Tempered glass, ¼" thick spread lens with 14 linear prisms per inch. One piece molded, U-channel, high temperature silicone rubber gasket. Full specular anodized aluminum internal reflector. Frame secured to reflector housing by six (6) captive socket head stainless steel screws threaded into stainless steel inserts in the housing.

Mounting yoke: 3/16" thick stainless steel, allows for full vertical adjustment with die cast aluminum aiming angle indicator and two (2) heavy duty, stainless steel locking bolts. Yoke is pre-drilled for mounting to various BEGA mounting accessories.

Lamp focusing: Three (3) socket head stainless steel screws are provided for precise leveling and focusing of the H.I.D. lamp arc tube within the reflector optical system. This feature ensures perfect beam pattern maintenance by allowing compensation for lamp irregularities.

Electrical: Lampholder: Mogul base porcelain with nickel plated copper screw shell supplied with 200°C high temperature leads, pulse rated 5KV. Ballast is magnetic HPF available in 120V or 277V - specify. Provided with a remote ballast located in a NEMA 3R box.

Finish: These luminaires are available in five standard BEGA colors: Black (BLK); White (WHT); Bronze (BRZ); Silver (SLV); Eurocoat™ (URO). To specify, add appropriate suffix to catalog number. For complete description of BEGA finishing process, refer to technical information section at end of catalog. Custom colors supplied on special order.

U.L. listed, suitable for wet locations. Protection class: IP 67.

Note: 1000W floodlights are supplied with a remote mounted, rain tight Nema 3R ballast box.

Type: L
BEGA Product #: 8398MH-662-MOD 480V
Project: COUNTY LINE E.S.T
Voltage:
Color:
Options:
Modified:

**662= CONCENTRIC RING LOUVER

MODIFIED FOR 480 VOLT

	Lamp	Beam	Field	Nema
8398	Clear	56° x 13.5°	83.5° x 45.9°	5H x 3V

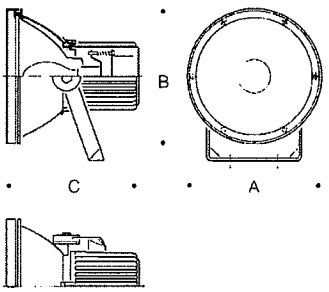

Floodlights for building or area illumination. Full, specular anodized aluminum reflector. Tempered spread lens with 14 linear prisms per inch. Fully adjustable stainless steel yoke/ swivel mounting with degree indicator and locking feature. U.L. listed, suitable for wet locations. IP 67.
Color: Standard BEGA finishes.

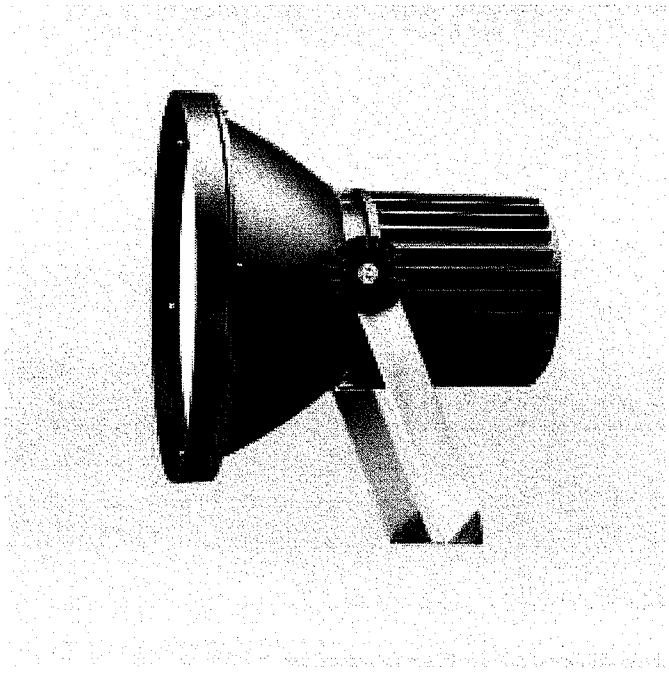

	Glass	Lamp	Lumen	A	B	C
8398MH	Spread	1 1000W BT-37 MH	110000	18	20 1/16	18 1/2

BEGA/US 1000 BEGA Way, Carpinteria, CA 93013 [P] 805·684·0533 [F] 805·684·6682
©Copyright BEGA/US 2005 updated 4/05

Magnuspec

MSS Series

Magnuspec™

The compact MSS Magnuspec Series is a versatile performer. Voltages range from 70-175 watt and all IES distributions are available from segmented reflectors. Applications include mounting heights from 8-20 feet covering parking, walkways, parks, canopies and parking garages.

Dimensions

Arm/Ceiling Mount

	A	B	EPA	Weight
MSS	8.0"	16.25"	1.2 ft.²	25lbs
	203 mm	413 mm	0.1 m²	11.3kg

Garage Mount

	A	B	C	EPA	Weight
MSS	21.625" - 24"	17.0"	16.25"	1.2 ft.²	25lbs
	549-607 mm	432 mm	413 mm	0.1 m²	11.3kg

Yoke Mount

	A	B	C	D	EPA	Weight
MSS	5.125"	19.25"	19.25"	11.25"	1.2 ft.²	39lbs
	131 mm	489 mm	489 mm	286 mm	0.1 m²	19.5kg

EPA and weight values do not include mounting arm.
Drop lens adds 0.35 EPA.

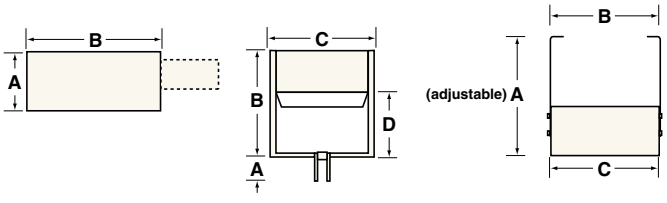

Features

Housing - *Square, one-piece formed aluminum housing with smooth wall construction.*

Door - *Extruded aluminum door frame with silicone gasketing and tool-less, die-cast zinc latches. Flat glass and dropped acrylic or polycarbonate lens types available.*

Optics - *Reflector system made form multifaceted segmented panels. Flat glass horizontal lamp unit offers Type I, III, IV and V Square distributions. Flat glass vertical lamp units provide Type V distributions. Vertically lamped drop lens units offer Type V distributions. Tool-free rotatable optics.*

Mounting - *Extruded arm, yoke and garage-type mounting available for design flexibility.*

Electrical - *Pulse rated medium base porcelain sockets for ED-17 lamps. CWA type ballast, 60 Hz HPF, starting rated at -20°F (-40°F HPS). 50 Hz available, consult factory. Removable Powr-Panl® ballast tray.*

Finish - *Durable Lektrocote® TGIC thermoset polyester powder paint finish assures long life and maintenance-free operation.*

UL listed and CSA certified for outdoor use in wet locations.

Garage mount is damp location listed.

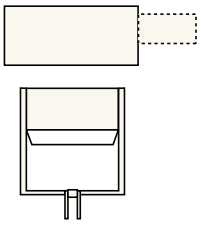

Luminaire Logic

1	2	3	4	5	6	7	8
MSS Series	**A** Mount	**100S** Wattage/ Source	**3** Ballast	**V** Lamp Ornt./Distrb.	**6** Volts	**4** Color	**PCR1** Options

1 Series
- **MSS** Magnuspec

2 Mounting
- **A** Arm Mount (arm not included, order separately)[1]
- **C** Ceiling
- **G** Garage
- **Y** Yoke Mount (2.375" tenon)

3 Wattage/Source

Metal Halide
- **070H** 70W (ED-17)
- **100H** 100W (ED-17)
- **175H** 175W (ED-17)

High Pressure Sodium
- **070S** 70W (ED-17)
- **100S** 100W (ED-17)
- **150S** 150W (ED-17)

4 Ballast Type
- **3** Powr-Panl®

5 Lamp Orientation/Distribution
- **I** Type I (Horizontal)
- **P** Type III (Horizontal)[2]
- **T** Type IV (Horizontal)
- **W** Type V (Horizontal)
- **V** Type V (Vertical)
- **A** Drop Acrylic Type V (Vertical)
- **L** Drop Polycarbonate Type V (Vertical)

6 Voltage
- **8** Quad-Tap® (120, 208, 240, 277V)[3]
- **5** 480V[4]
- **6** Tri-Tap® (120, 277, 347V)[3]
- **E** 220/240V 50 Hz[5]
- **0** No Ballast

7 Color
- **1** Dark Bronze
- **2** Black
- **4** White
- **3** Gray
- **P** Platinum Silver
- **R** Red (Premium Color)
- **7** Forest Green (Premium Color)

8 Options

Fusing
- **F1** 120V
- **F2** 208V
- **F3** 240V
- **F4** 277V
- **F5** 480V
- **F6** 347V

Photo Cell Receptacle
- **PCR1** 120V
- **PCR2** 208V
- **PCR3** 240V
- **PCR4** 277V
- **PCR5** 480V
- **PCR6** 347V
- **L** Lamp

[1] Use #4 drill pattern when ordering poles and brackets.
[2] Field adjustable to Type II.
[3] Factory wired for highest voltage unless specified.
[4] Not available in 70 and 100W metal halide.
[5] 175H and 150S only.

Accessories

MAS-4-X
Four inch rigid arm for flat surfaces.
MAS-10-X
Ten inch rigid arm for flat surfaces (required for 90° configurations).
RSD-44-X
Nominal 4" OD round pole adapter for MAS arms.
RSD-55-X
Nominal 5" OD round pole adapter for MAS arms.
MSS-90-X
2.375" to 3" OD tenon slipfitter drilled for MAS arms.
MAS-FM
Flush mount hardware for #4 drill pattern (required when no arm used on pole).
DS-WP-X
Wall plate for flush or arm mounting fixtures with #4 drill pattern.
MAS-K-X
2.375" OD tenon slipfitter with adjustable arm for single fixture.
MAS-TK-X
2.375" OD tenon slipfitter with adjustable arm for two fixtures.
MSS-SPC
.125" polycarbonate sheet suspended 3" below door frame.

Note: Replace the X with a color selection. For photocontrol equipment, see page 81.

PRESSURE TRANSMITTER

TABLE OF CONTENTS:

A. TECHNICAL INFORMATION
B. OPERATING INSTRUCTIONS

MANUFACTURER: **ENDRESS HAUSER**

MODEL #: **CERABAR M PMC41**

SUBCONTRACTOR / SUPPLIER
HARRELL & ASSOCIATES, INC.
CONTACT: DAVE HARRELL
POST OFFICE BOX 43068
FORT WORTH, TEXAS 76140
(817) 483-7582

PRESSURE TRANSMITTER

TABLE OF CONTENTS:

A. TECHNICAL INFORMATION
B. OPERATING INSTRUCTIONS

MANUFACTURER: **ENDRESS HAUSER**

MODEL #: **CERABAR M PMC41**

SUBCONTRACTOR / SUPPLIER
HARRELL & ASSOCIATES, INC.
CONTACT: DAVE HARRELL
POST OFFICE BOX 43068
FORT WORTH, TEXAS 76140
(817) 483-7582

Level | Pressure | Flow | Temperature | Liquid Analysis | Registration | Systems Components | Services | Solutions

Technical Information

Cerabar M PMC41/45, PMP41/45/46/48

Pressure transmitters with ceramic and metal membranes
Overload resistant and function-monitored
With Analog, HART® or Profibus® PA Electronics

Application

The Cerabar M pressure transmitter measures the gauge and absolute pressure in gases, vapors, and liquids and can be used in all areas of chemical and process engineering. The modular design of the Cerabar M enables it to be used in all industrial environments including hazardous areas. Process connections available include threaded, hygienic, flange, in-line flow-thru seals, Varivent®, Tri-clamp®, and flush mounted.

Your benefits

- Accuracy
  - Measured error better than 0.2% of the set measuring range (optional: non-linearity better than 0.1%)
  - Configurable measuring range up to TD 10:1
  - Long-term stability better than 0.25 % / 3 years
- SIL 2 certified according to IEC 61508/IEC 61511-1
- Sensors
  - Dry capacitance ceramic sensor (Ceraphire®) for measuring ranges up to 600 psi (40 bar), corrosion and abrasion resistant and high overlaod protection
  - Piezoresistive sensor with metal diaphragm for measuring ranges up to 6000 psi (400 bar)
- Output signals: 4 to 20 mA, 4 to 20 mA with HART, Profibus-PA
- Housing
  With its stainless steel housing, the Cerabar M fulfills sanitary requirements of the food and pharmaceutical industries. The polyester-epoxy coated aluminum housing is field-proven in the process industry.
- Device versions conformity with ASME-BPE
- Ceramic diaphragm biological reactivity tested per USP Class VI

TI399P/24/ae/08.08

Endress+Hauser

People for Process Automation

Table of contents

Function and system design 4
Device selection 4
Overview of diaphragm seals for PMP46 5
Overview of diaphragm seals for PMP48 6
Measuring principle 7
Communication protocol 8

Human interface 9
Local display (optional) 9
Operating elements 10
Onsite operation 10
Handheld terminals – HART 10
FieldCare – HART, PROFIBUS PA 11
Commuwin II – HART, PROFIBUS PA 11

Input 12
Measured variable 12
Measuring range 12
Explanation of terms 14

Output 15
Output signal 15
Signal range 15
Signal on alarm 15
Load – 4 to 20 mA and
4 to 20 mA HART 15
Resolution 15
Dead time, time constant (T63) 16
Dynamic behavior 4 to 20 mA (Analog electronic) 16
Dynamic behavior current output (HART electronic) 16
Dynamic behavior digital output (HART electronic) 16
Dynamic behavior PROFIBUS PA 17
Damping 17

Power supply 18
Electrical connection 18
Supply voltage 20
Current consumption 20
Cable entry 20
Cable specification 20
Residual ripple 20

Performance characteristics – general 21
Reference operating conditions 21
Reference accuracy 21
Uncertainty of measurement for small absolute pressure measuring
ranges 21
Long-term stability 21
Influence of the orientation 21
Raising and lowering the zero point 21
Vibration effects 22
Warm-up period 22
Rise time (T90) 22
Settling time 22

Performance characteristics – ceramic diaphragm . . 23
Reference accuracy 23
Thermal change of the zero output and the output span 23
Temperature coefficient (TK) for zero output and output span . . . 23

Performance characteristics – metal diaphragm 24
Reference accuracy 24
Thermal change of the zero output and the output span 24
Temperature coefficient (TK) for zero output and output span . . . 24

Operating conditions (installation) 25
General installation instructions 25
Measuring arrangement for devices without a diaphragm seal –
PMC41, PMC45, PMP41, PMP45 25
Mounting with temperature isolator 25
Wall and pipe-mounting 26
Oxygen applications 27
PWIS-free applications 27
Ultrapure gas applications 27

Operating conditions (environment) 28
Ambient temperature limits 28
Storage temperature range 28
Degree of protection 28
Climate class 28
Electromagnetic compatibility 28

Operating conditions (process) 29
Process temperature limits 29
Temperature operating range, seals 29
Pressure specifications 30

Mechanical construction 31
Dimensions of stainless steel housing 31
Dimensions of aluminum housing 31
General Note on flanges 31
Process connections PMC41
(with ceramic measuring diaphragm) 31
Process connections PMC45
(with ceramic measuring diaphragm) 33
Process connections PMP41 (with metal measuring diaphragm) . 41
Process connections PMP45 (with metal measuring diaphragm) . 43
Process connections PMP46 (with metal measuring diaphragm) . 45
Process connections PMP48 (with metal measuring diaphragm) . 51
Weight 58
Material 58

Planning instructions for diaphragm seal systems . . . 59
Applications 59
Planning instructions 59
Diaphragm seal filling oils 60
Influence of the temperature on the zero point 61
Ambient temperature range 65
Installation instructions 65

Certificates and approvals 66
CE mark 66
Ex approvals 66

Suitability for hygienic processes 66
CRN approval 66
Pressure Equipment Directive (PED) 66
Functional safety SIL 2/
IEC 61508/IEC 61511-1 66
Standards and guidelines 66

Ordering information 67
PMC41 67
PMC45 69
PMP41 72
PMP45 74
PMP46 76
PMP48 79

Additional Documentation. 82
Field of Activities 82
Technical Information 82
Operating Instructions 82
Functional Safety Manual (SIL) 82
Safety conventions and icons 82
Installation/Control Drawings 82

Accessories 83
PMP45 tank adapters 83

Function and system design

Device selection

Cerabar M – product family	**PMC41** 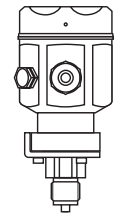 P01-PMC41xxx-16-xx-xx-xx-000 **With capacitance measuring cell and ceramic measuring diaphragm (Ceraphire®)**	**PMC45** 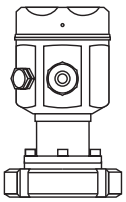 P01-PMC45xxx-16-xx-xx-xx-000	**PMP41** 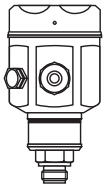 P01-PMP41xxx-16-xx-xx-xx-000 **With piezoresistive measuring cell and metal measuring diaphragm**	**PMP45** 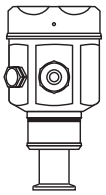 P01-PMP45xxx-16-xx-xx-xx-000	**PMP46** 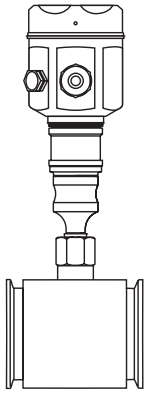 P01-PMP46xxx-16-xx-xx-xx-000 **With piezoresistive measuring cell, and diaphragm seal**	**PMP48** 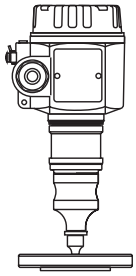 P01-PMP48xxx-16-xx-xx-xx-000
Field of application	Absolute pressure and overpressure					
Process connections	Threaded connections	Flush-mounted hygienic connections	Threaded connections	Flush-mounted hygienic connections	Hygiene diaphragm seal, diaphragm seals compliant with ASME-BPE → see following section "Overview of PMP46 diaphragm seals"	Flange diaphragm seal, separator with threaded connection → see following section "Overview of PMP48 diaphragm seals"
Measuring ranges	Up to 600 psi (40 bar)		Up to 6000 psi (400 bar)			
Overpressure limit (OPL) [1]	Max. 870 psi (60 bar)		Max. 8700 psi (600 bar)			
Process temperature range	–40 to +100°C (–40 to +212°F)	–40 to +125°C (–40 to +257°F), +150°C (+302°F) for 1 h	–40 to +100°C (–40 to +212°F)	–40 to +125°C (–40 to +257°F), +150°C (+302°F) for 1 h	-70 to +400°C (–94 to +752°F)	
Ambient temperature range	40 to +85°C (–40 to +185°F)					
Maximum measured error	– ±0.2% of set span – Optional: non-linearity ±0.1% of set span				±0.2% of set span	
Supply voltage	– For non-hazardous areas: 11.5 to 45 V DC – Hazardous areas: 11.5 to 30 V DC					
Output	4 to 20 mA, 4 to 20 mA with superimposed HART protocol, PROFIBUS PA					
Options	– 3.1 Inspection certificate – Materials compliant with FDA – Mounting bracket	– 3.1 Inspection certificate – Materials compliant with FDA	– 3.1 Inspection certificate – Materials compliant with FDA – Mounting bracket	– 3.1 Inspection certificate – Materials compliant with FDA	– 3.1 Inspection certificate – Materials compliant with FDA – Temperature isolator – Electropolished surface – Mounting bracket	
Specialties	– Flexibility thanks to modular design – Large selection of approvals, including ATEX, FM and CSA – Wide range of cable entries, cable glands and connectors – Choice of robust housing made of stainless steel (AISI 316L) or coated aluminum housing for strict hygienic requirements – Electropolished wetted surfaces – Dry ceramic cell (without fill fluid), resistant to abrasion and corrosion, compliant with FDA: Ceraphire® – Special cleaning of the transmitter to remove paint-wetting impairment substances, for use in paint shops					

1) Depends on the element of the selected components which has the lowest pressure rating

Overview of diaphragm seals for PMP46

Design	Diaphragm seal	Connection	Version	Standard	Nominal diameter	Nominal pressure/ Class
Hygienic version	Membrane diaphragm seal (MDM)	Nozzle with coupling nut	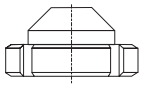 P01-PMP46xxx-03-xx-xx-xx-000	DIN 11851	– DN 32 – DN 40 – DN 50	– PN 40 – PN 40 – PN 25
			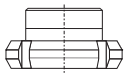 P01-PMP46xxx-03-xx-xx-xx-001	SMS	– 1 1/2" – 2"	PN 25
			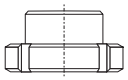 P01-PMP46xxx-03-xx-xx-xx-002	RJT	– 1 1/2" – 2"	PN 40
			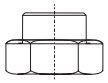 P01-PMP46xxx-03-xx-xx-xx-003	ISS	– 1 1/2" – 2"	PN 40
		Varivent	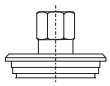 P01-PMP46xxx-03-xx-xx-xx-004		– Type F for pipes DN 25 – DN 32 – Type N for pipes DN 40 – DN 162	PN 40
		Clamp	P01-PMP46xxx-03-xx-xx-xx-005	ISO 2852	– DN 25 (1") – DN 38 (1 1/2") – DN 51 (2") – DN 76.1 (3")	Dependent on the clamp used
		DRD	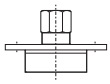 P01-PMP46xxx-03-xx-xx-xx-006		DN50 (65 mm)	PN 25
	Pipe diaphragm seal (RDM)	Threaded adapter	P01-PMP46xxx-03-xx-xx-xx-007	DIN 11851	– DN 25	PN 40
					– DN 40	PN 40
					– DN 50	PN 25
		Clamp	P01-PMP46xxx-03-xx-xx-xx-008	ISO 2852	– DN 10 (3/4") – DN 16 (3/4") – DN 25 (1") – DN 38 (1 1/2") – DN 51 (2")	Dependent on the clamp used
Versions compliant with ASME-BPE for use in biotechnical processes; wetted surfaces $R_a \leq 0.4$ µm (15.75 µin; 180 grit), electropolished	Membrane diaphragm seal (MDM)	Clamp	P01-PMP46xxx-03-xx-xx-xx-005	ISO 2852	– DN 38 (1 1/2") – DN 51 (2")	Dependent on the clamp used
		Varivent	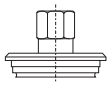 P01-PMP46xxx-03-xx-xx-xx-004		– Type N for pipes DN 40 – DN 162	PN 40

Overview of diaphragm seals for PMP48

Design	Diaphragm seal	Connection	Version	Standard	Nominal diameter	Nominal pressure/ Class
Threaded connection	Membrane diaphragm seal (MDM)	G	P01-PMP48xxx-03-xx-xx-xx-000	DIN ISO 228/1	– G 1 A – G 1 1/2 A – G 2 A	Up to 6000 psi (400 bar)
		NPT	P01-PMP48xxx-03-xx-xx-xx-001	ANSI B1.20.1	– 1 NPT – 1 1/2 NPT – 2 NPT	
Threaded connection with separator		G	P01-PMP48xxx-03-xx-xx-xx-002	ISO 228/ EN 837	G 1/2	Up to 2320 psi (160 bar)
		NPT	P01-PMP48xxx-03-xx-xx-xx-003	ANSI B1.20.1	1/2 NPT	
flange		EN/DIN flange	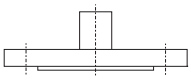 P01-PMP48xxx-03-xx-xx-xx-004	EN 1092-1/ DIN 2527 and DIN 2501-1	– DN 25 – DN 50 – DN 80	– Up to PN 400 – Up to PN 400 – Up to PN 40
		ANSI flange		ANSI B.16.5	– 1" – 2" – 3" – 4"	– Up to 2500 lbs – Up to 2500 lbs – Up to 300 lbs – Up to 300 lbs
		JIS flange		B 2220	– 25 A – 50 A – 80 A	Up to 10 K
Flange with extended diaphragm seal		EN/DIN flange	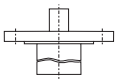 P01-PMP48xxx-03-xx-xx-xx-005	EN 1092-1/ DIN 2527	– DN 50 – DN 80	Up to PN 40
		ANSI flange		ANSI B.16.5	– 2" – 3" – 4"	Up to 150 lbs

Measuring principle

Ceramic measuring diaphragm used for PMC41 and PMC45 (Ceraphire®)

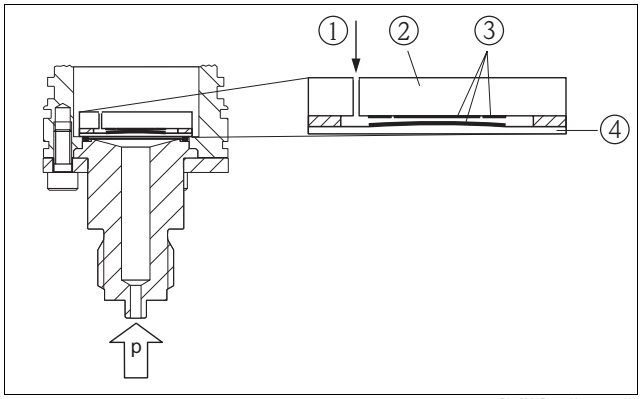

P01-PMC71xxx-03-xx-xx-xx-000

Ceramic sensor

1 Air pressure (overpressure sensors)
2 Ceramic carrier
3 Electrodes
4 Ceramic diaphragm

Metal measuring diaphragm used in PMP41, PMP45, PMP46 and PMP48

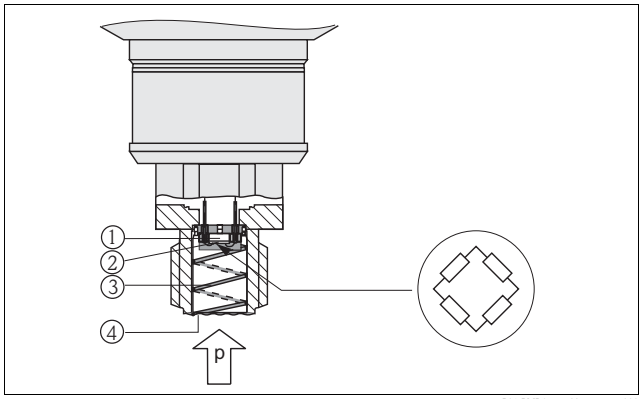

P01-PMP4xxxx-03-xx-xx-xx-000

Metal sensor

1 Silicon measuring element, carrier
2 Measuring diaphragm with Wheatstone bridge
3 Channel with fill fluid
4 Flush-mounted metal diaphragm

Ceramic measuring diaphragm used for PMC41 and PMC45 (Ceraphire®)

The ceramic sensor is a dry sensor, i.e. the process pressure acts directly on the robust ceramic diaphragm and deflects it. A pressure-dependent change in capacitance is measured at the electrodes of the ceramic carrier and the diaphragm. The measuring range is determined by the thickness of the ceramic diaphragm.

Advantages:
- Guaranteed overload resistance up to 40 times the nominal pressure (max. 870 psi / 60 bar)
- Thanks to 99.9% high-purity ceramic (Ceraphire®, → see also www.endress.com/ceraphire)
  - Extremely high chemical stability
  - Less relaxation
  - High mechanical stability
- Suitable for vacuums
- Very suitable for hygienic processes as the ceramic material Al_2O_3 is safe and not harmful to health (FDA 21CFR186.1256, USP Class VI)

Metal measuring diaphragm used for PMP41, PMP45, PMP46 and PMP48

PMP41 and PMP45

The operating pressure deflects the separating diaphragm and a fill fluid transfers the pressure to a resistance measuring bridge (semiconductor technology). The pressure-dependent change in the bridge output voltage is measured and processed further.

Advantages:
- Can be used with process pressures up to 6000 psi (400 bar)
- High long-term stability
- Guaranteed overload resistance up to 4 times the nominal pressure (max. 8700 psi / 600 bar)
- Compact solution even for small hygienic connections

PMP46 and PMP48

The operating pressure acts on the diaphragm of the diaphragm seal and is transferred to the separating diaphragm of the sensor by a diaphragm seal fill fluid. The separating diaphragm is deflected and a fill fluid transfers the pressure to a resistance measuring bridge. The pressure-dependent change in the bridge output voltage is measured and processed further.

Advantages:
- Can be used with process pressures up to 6000 psi (400 bar)
- High long-term stability
- Guaranteed overload resistance up to 4 times the nominal pressure (max. 8700 psi / 600 bar)

Communication protocol

- 4 to 20 mA without communication protocol
- 4 to 20 mA with HART communication protocol
- PROFIBUS PA
  - The Endress+Hauser devices meet the FISCO model requirements.
  - Due to the low current consumption of 11 mA ±1 mA the following can be operated at one bus segment when installing to FISCO:
    - Up to 9 Cerabar M for EEx ia, CSA IS and FM IS applications
    - Up to 32 Cerabar M for all other applications, e.g. in non-hazardous areas, EEx nA, etc.

  Further information on PROFIBUS PA can be found in Operating Instructions BA034S "PROFIBUS DP/PA: Guidelines for planning and commissioning" and in the PNO Guidelines (Profibus User Organization).

Human interface

Local display (optional)

Analog display for devices with analog electronics

A plug-in liquid crystal display (LCD), with a bar graph for showing the current (30 segments), is used as the display unit. The display can be rotated in 90° stages.

Functions:
- Bar graph to indicate the measured value from 0 to 100%. This corresponds to a signal current of 4 to 20 mA.
- The scale flashes to indicate signal undershoot (current < 3.8 mA).
- The bar graph and scale flash to indicate signal overshoot (current > 20.5 mA).

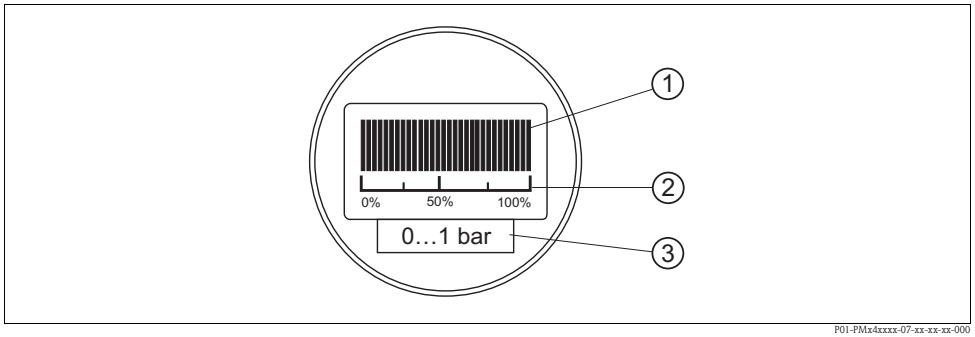

Onsite display for devices with analog electronics

1 Bar graph
2 Scale
3 Cell measuring range

Digital display for devices with 4 to 20 mA HART or PROFIBUS PA electronics

A plug-in digital display, with a 4-digit pressure display and bar graph (28 segments), is used as the display unit. The display can be rotated in 90° stages.

Functions:
- 4-digit pressure display
- Bar graph
  - 4 to 20 mA HART: the bar graph displays the current value (4 to 20 mA) belonging to the pressure value.
  - PROFIBUS PA: the bar graph displays the current pressure value in relation to the set measuring range.
- Easy diagnosis by displaying an error code

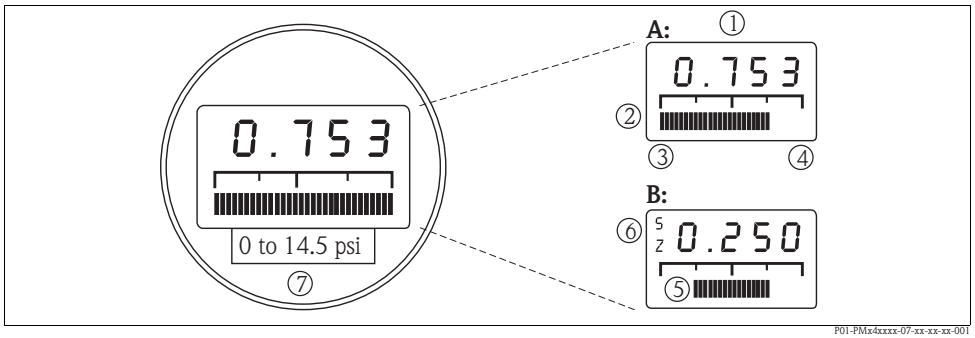

Local display for devices with 4 to 20 mA HART or PROFIBUS PA electronics

A Display in measuring mode
B Display in calibration mode

1 4-digit display of measured values and input parameters
2 Bar graph, display of current measured value
3 Lower-range value
4 Upper-range value
5 Set measuring range in measuring limits
6 Display of calibration point Z (Zero) = lower-range value (LRV) or S (Span) = upper-range value (URV)
7 Nominal measuring range

Operating elements

The operating elements are located under the optional onsite display on the electronic insert.

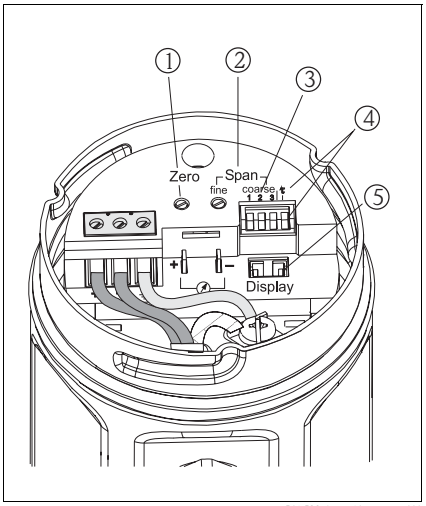

P01-PMx4xxxx-19-xx-xx-xx-000

Analog electronic insert

1 Potentiometer for calibrating the lower-range value (Zero)
2 Potentiometer for fine adjustment of the span
3 DIP switches 1 to 3 for coarse adjustment of the span
4 DIP switch for damping on/off
5 Slot for optional onsite display

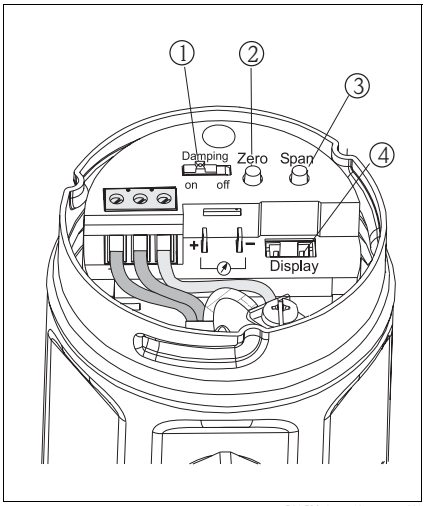

P01-PMx4xxxx-19-xx-xx-xx-001

4 to 20 mA HART electronic insert

1 Switch for damping on/off
2 Key for calibrating the lower-range value (Zero)[1]
3 Key for calibrating the upper-range value (Span)[2]
4 Slot for optional onsite display

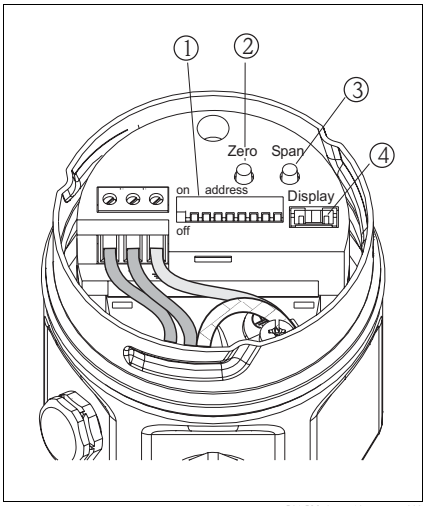

P01-PMx4xxxx-19-xx-xx-xx-002

PROFIBUS PA electronic insert

1 DIP switches for bus address
2 Key for calibrating the lower-range value (Zero)[1]
3 Key for calibrating the upper-range value (Span)[2]
4 Slot for optional onsite display

1) Lower-range value (LRV) = Zero

2) Upper-range value (URV) = Span

Local operation

4 to 20 mA functions

- Calibrating the display value (e.g. on the local display) to zero
- Setting the lower-range value and upper-range value – reference pressure applied at the device
- Switching damping on and off

4 to 20 mA HART functions

- Calibrating the display value (e.g. on the local display) to zero
- Setting the lower-range value and upper-range value – reference pressure applied at the device
- Switching damping on and off
- Performing reset

PROFIBUS PA functions

- Calibrating the display value on the local display to zero
- Setting the lower-range value and upper-range value – reference pressure applied at the device
- Setting the bus address of the device

Handheld terminals – HART

With a handheld terminal, all the parameters can be configured anywhere along the 4 to 20 mA line via menu operation.

FieldCare – HART, PROFIBUS PA

FieldCare is Endress+Hauser's plant asset management tool which is based on FDT technology. With FieldCare, you can configure all of Endress+Hauser devices, as well as devices from other manufacturers that support the FDT standard.

FieldCare supports the following functions:
- Configuration of transmitters in offline and online mode
- Loading and saving device data (upload/download)
- Documentation of the measuring point

Connection options:
- HART via Commubox FXA195 and the USB interface of a computer
- PROFIBUS PA via segment coupler and PROFIBUS interface card

For more information, see → www.endress.com.

Commuwin II – HART, PROFIBUS PA

Commuwin II is a graphically supported operating program for intelligent measuring devices with the HART and PROFIBUS PA communication protocols. The following operating systems are supported: Win 3.1/3.11, Win 95, Win 98, WinNT4.0 and Win2000. Commuwin II shows the most important parameters.

Commuwin II supports the following functions:
- Configuration of measuring devices in online mode via matrix operation
- Loading and saving device data (upload/download)
- Visualization of measured values and limit values
- Presentation and recording of measured values with a line recorder

Connection options:
- HART via Commubox FXA191 and the RS 232 C serial interface of a computer
- PROFIBUS PA via segment coupler and PROFIBUS interface card

Input

Measured variable

Absolute pressure or overpressure

Measuring range

PMC41 and PMC45 with ceramic measuring diaphragm (Ceraphire®) for overpressure

Nominal value	Measurement limits		Smallest span that can be calibrated	OPL [1]	MWP [2]	Vacuum resistance	Version in the order code [3]
	lower (LRL)	upper (URL)					
	psi (bar)	psi (bar)	psi (bar)	psi (bar)	psi (bar)	psia (bar_{abs})	
1.5 psi (100 mbar)	0	1.5 (0.1)	0.15 (0.01)	60 (4)	40 (2.7)	10 (0.7)	1C
6 psi (400 mbar)	0	6 (0.4)	0.6 (0.04)	115 (8)	80 (5.3)	0	1F
15 psi (1 bar)	0	15 (1)	1.5 (0.1)	150 (10)	100 (6.7)	0	1H
60 psi (4 bar)	0	60 (4)	6 (0.4)	360 (25)	240 (16.7)	0	1M
150 psi (10 bar)	0	150 (10)	15 (1)	600 (40)	390 (26.7)	0	1P
600 psi (40 bar)	0	600 (40)	60 (4)	870 (60)	600 (40)	0	1S

PMC41 and PMC45 with ceramic measuring diaphragm (Ceraphire®) for negative overpressure

Nominal value	Measurement limits		Smallest span that can be calibrated	OPL [1]	MWP [2]	Vacuum resistance	Version in the order code [3]
	lower (LRL)	upper (URL)					
	psi (bar)	psi (bar)	psi (bar)	psi (bar)	psi (bar)	psia (bar_{abs})	
1.5 psi (100 mbar)	-1.5 (–0.1)	1.5 (0.1)	0.3 (0.02)	60 (4)	40 (2.7)	10 (0.7)	5C
6 psi (400 mbar)	-6 (–0.4)	6 (0.4)	1.2 (0.08)	115 (8)	80 (5.3)	0	5F
15 psi (1 bar)	-15 (–1)	15 (1)	3 (0.2)	150 (10)	100 (6.7)	0	5H
60 psi (4 bar)	-15 (–1)	60 (4)	7 (0.5)	360 (25)	240 (16.7)	0	5M
150 psi (10 bar)	-15 (–1)	150 (10)	16 (1.1)	600 (40)	390 (26.7)	0	5P

PMC41 and PMC45 with ceramic measuring diaphragm (Ceraphire®) for absolute pressure

Nominal value	Measurement limits		Smallest span that can be calibrated	OPL [1]	MWP [2]	Vacuum resistance	Version in the order code [3]
	lower (LRL)	upper (URL)					
	psia (bar_{abs})	psia (bar_{abs})	psi (bar)	psia (bar_{abs})	psia (bar_{abs})	psia (bar_{abs})	
6 psi (400 mbar)	0	6 (0.4)	0.6 (0.04)	115 (8)	80 (5.3)	0	2F
15 psi (1 bar)	0	15 (1)	1.5 (0.1)	150 (10)	100 (6.7)	0	2H
60 psi (4 bar)	0	60 (4)	6 (0.4)	360 (25)	240 (16.7)	0	2M
150 psi (10 bar)	0	150 (10)	15 (1)	600 (40)	390 (26.7)	0	2P
600 psi (40 bar)	0	600 (40)	60 (4)	870 (60)	600 (40)	0	2S

1) OPL: overpressure limit

2) The MWP (maximum working pressure) for the measuring device depends on the element of the selected components which has the lowest pressure rating, i.e. the process connection (→ see Page 31 ff) has to be taken into consideration in addition to the measuring cell (→ see Table above). Please also observe the pressure-temperature dependencies. For the appropriate standards and further information, see Page 30, "Pressure specifications" section.

3) Version in the order code → see also Page 67 ff, feature 30 "Sensor range; MWP, OPL"

PMP41, PMP 45, PMP46 and PMP48 with metal measuring diaphragm for overpressure

Nominal value	Measurement limits		Smallest span that can be calibrated	OPL [1]	MWP [2]	Vacuum resistance [3]	Version in the order code [4]
	lower (LRL)	upper (URL)					
	psi (bar)	psi (bar)	psi (bar)	psi (bar)	psi (bar)	psia (bar_{abs})	
15 psi (1 bar)	0	15 (1)	1.5 (0.1)	60 (4)	40 (2.7)	0.15 (0.01)	3H
60 psi (4 bar)	0	60 (4)	6 (0.4)	230 (16)	155 (10.7)	0.15 (0.01)	3M
150 psi (10 bar)	0	150 (10)	15 (1)	600 (40)	390 (26.7)	0.15 (0.01)	3P
600 psi (40 bar)	0	600 (40) [5]	60 (4)	2320 (160)	1500 (100)	0.15 (0.01)	3S
1500 psi (100 bar)	0	1500 (100) [5]	150 (10)	6000 (400)	1500 (100)	0.15 (0.01)	3U [6]
6000 psi (400 bar)	0	6000 (400) [5]	600 (40)	8700 (600)	6000 (400)	0.15 (0.01)	3S [6]

PMP41, PMP45, PMP46, PMP48 with metal measuring diaphragm for negative overpressure

Nominal value	Measurement limits		Smallest span that can be calibrated	OPL [1]	MWP [2]	Vacuum resistance [3]	Version in the order code [4]
	lower (LRL)	upper (URL)					
	psi (bar)	psi (bar)	psi (bar)	psi (bar)	psi (bar)	psia (bar_{abs})	
15 psi (1 bar)	-15 (–1)	15 (1)	3 (0.2)	60 (4)	2.7	0.15 (0.01)	7H
60 psi (4 bar)	-15 (–1)	60 (4)	7 (0.5)	230 (16)	10.7	0.15 (0.01)	7M
150 psi (10 bar)	-15 (–1)	150 (10)	16 (1.1)	600 (40)	26.7	0.15 (0.01)	7P

PMP41, PMP45, PMP46, PMP48 with metal measuring diaphragm for absolute pressure

Nominal value	Measurement limits		Smallest span that can be calibrated	OPL [1]	MWP [2]	Vacuum resistance [3]	Version in the order code [4]
	lower (LRL)	upper (URL)					
	psia (bar_{abs})	psia (bar_{abs})	psi (bar)	psia (bar_{abs})	psia (bar_{abs})	psia (bar_{abs})	
15 psi (1 bar)	0	15 (1)	1.5 (0.1)	60 (4)	40 (2.7)	0.15 (0.01)	4H
60 psi (4 bar)	0	60 (4)	6 (0.4)	230 (16)	155 (10.7)	0.15 (0.01)	4M
150 psi (10 bar)	0	150 (10)	15 (1)	600 (40)	390 (26.7)	0.15 (0.01)	4P
600 psi (40 bar)	0	600 (40)	60 (4)	2320 (160)	1500 (100)	0.15 (0.01)	4S
1500 psi (100 bar)	0	1500 (100)	150 (10)	6000 (400)	1500 (100)	0.15 (0.01)	4U [6]
6000 psi (400 bar)	0	6000 (400)	600 (40)	8700 (600)	6000 (400)	0.15 (0.01)	4Z [6]

1) OPL: overpressure limit
2) The MWP (maximum working pressure) for the measuring device depends on the element of the selected components which has the lowest pressure rating, i.e. the process connection (→ see Page 31 ff) has to be taken into consideration in addition to the measuring cell (→ see Table above). Please also observe the pressure-temperature dependencies. For the appropriate standards and further information, see Page 30, "Pressure specifications" section.

3) Observe the pressure and temperature operating limits of the filling oil selected. → See Page 60, "Diaphragm seal filling oils" section.
4) Version in the order code → see also Page 67 ff, feature 30 "Sensor range; MWP, OPL"
5) Absolute pressure sensors
6) Not for PMP46

Explanation of terms

Explanation of terms: turn down (TD), set span and span based on zero point

Case 1:
- | Lower-range value (LRV) | ≤ | upper-range value (URV) |

Example:
- Lower-range value (LRV) = 0 bar
- Upper-range value (URV) = 7 psi (0.5 bar)
- Nominal value (URL) = 15 psi (1 bar)

Turn down:
- Nominal value/ | upper-range value (URV) | = 15/7 psi (1 bar/0.5 bar)
  TD = 2:1

Set span:
- Upper-range value (URV) – lower-range value (LRV) = 7 - 0 psi (0.5 bar – 0 bar)
  Set span = 7 psi (0.5 bar)
  This span is based on the zero point.

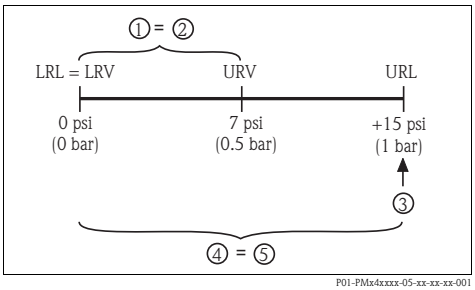

Example: 15 psi (1 bar) measuring cell

Case 2:
- | Lower-range value (LRV) | ≤ | upper-range value (URV) |

Example:
- Lower-range value (LRV) = 0 bar
- Upper-range value (URV) = 7 psi (0.5 bar)
- Nominal value (URL) = 15 psi (1 bar)

Turn down:
- Nominal value/ | upper-range value (URV) | = 15/7 psi (1 bar/0.5 bar)
  TD = 2:1

Set span:
- Upper-range value (URV) – lower-range value (LRV) = 7 - 0 psi (0.5 bar – 0 bar)
- Set span = 7 psi (0.5 bar)
  This span is based on the zero point.

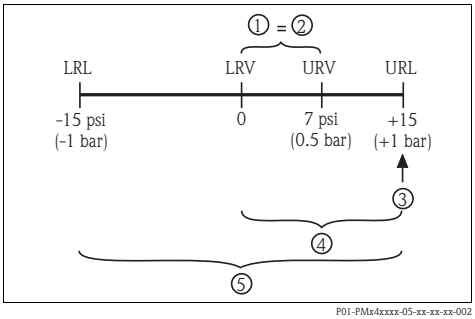

Example: 15 psi (1 bar) measuring cell

Case 3:
- | Lower -range value (LRV) | ≥ | upper-range value (URV) |

Example:
- Lower-range value (LRV) = -9 psi (–0.6 bar)
- Upper-range value (URV) = 0 bar
- Nominal value (URL) = 15 psi (1 bar)

Turn down:
- Nominal value/ | lower-range value (LRV) | = 15/9 psi (1 bar/0.6 bar)
  TD 1.67:1

Set span:
- Upper-range value (URV) – lower-range value (LRV) = 0 - (-9 psi) (0 bar – (–0.6 bar)
  Set span = 9 psi (0.6 bar)
  This span is based on the zero point.

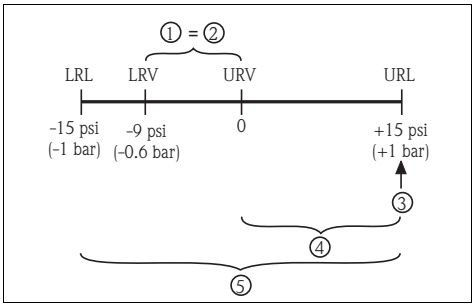

Example: 15 psi (1 bar) measuring cell

1 Set span
2 Span based on zero point
3 Nominal value ≙ upper-range limit (URL)
4 Nominal measuring range
5 Sensor measuring range
LRL Lower-range limit
URL Upper-range limit
LRV Lower-range value
URV Upper-range value

Output

Output signal

- 4 to 20 mA, 2-wire
- 4 to 20 mA with superimposed communication protocol HART, 2-wire
- Digital communication signal PROFIBUS PA (Profile 3.0), 2-wire

Signal range

4 to 20 mA, 4 to 20 mA HART:
- 3.8 to 20.5 mA

Signal on alarm

- 4 to 20 mA:
  - Signal overshoot: > 20.5 mA
  - Signal undershoot: < 3.8 mA
- 4 to 20 mA HART:
  Options:
  - MIN: 3.6 mA
  - MAX: 22 mA (factory setting)
  - Continue: last measured value is kept
- PROFIBUS PA: can be set in the Analog Input Block, options: last good value (factory setting), FSAFE value, wrong value

Load – 4 to 20 mA and 4 to 20 mA HART

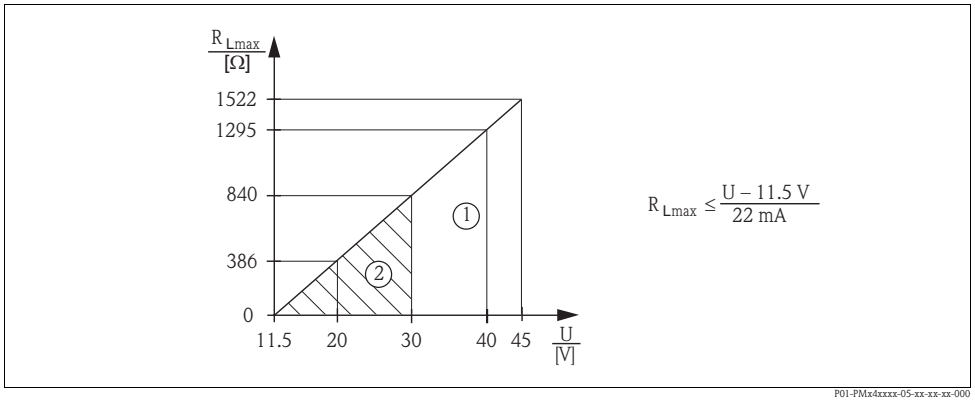

Load diagram, observe explosion protection.

1 Power supply 11.5 to 45 V DC for devices for non-hazardous areas, 1/3 D, EEx d, EEx nA, FM XP, FM DIP, CSA XP and CSA Dust-Ex
2 Power supply 11.5 to 30 V DC for EEx ia, 1 D, 1/2 D 1/2G, FM IS and CSA IS
R_{Lmax} Maximum load resistance
U Supply voltage

Note!
Devices with 4 to 20 mA HART electronics: when operating via a handheld terminal or via a PC with an operating program, a minimum communication resistance of 250 Ω must be taken into account.

Resolution

- 4 to 20 mA:
  - Current output: < 1 µA
  - Local display: 30 segments
- 4 to 20 mA HART:
  - Current output:
    - Typical value: 1 µA
    - Max.: 6 µA
  - Local display: 28 segments, numerical value display with 1 per thousand resolution
- PROFIBUS PA:
  - Local display: 28 segments, display value with resolution 1 per thousand

Dead time, time constant (T63)

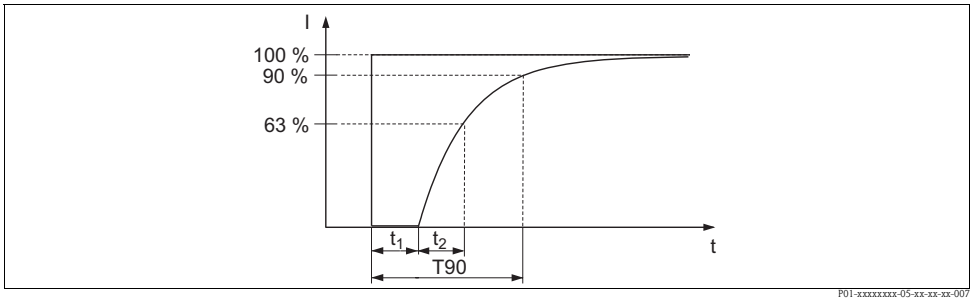

Illustration of dead time and time constant

Dynamic behavior 4 to 20 mA (Analog electronic)

Dead time, time constant (T63)

Types	Dead time t_1	Time constant (T63), t_2	Step response time (T90)
all	—	40 ms	80 ms
PMP46/PMP48	additional influence from the diaphragm seal		

Dynamic behavior current output (HART electronic)

Types	Dead time t_1	Time constant (T63), t_2
all	290 ms	240 ms
PMP46/PMP48	additional influence from the diaphragm seal	

Dynamic behavior digital output (HART electronic)

Dead time, time constant (T63)

For HART communication, the dead time consists of the internal dead time of the device and the update rate on the bus:

Types	Dead time t_1	Time constant (T63), t_2
all	540 ms	240 ms
PMP46/PMP48	additional influence from the diaphragm seal	

Reading cycle

HART commands: on average 3 to 4 per second on average.

Update rate

On average 250 to 330 ms.

Dynamic behavior PROFIBUS PA

Dead time, time constant (T63)

For PROFIBUS, the dead time consists of the internal dead time of the device, the response time of the AI function block and the cycle time of the communication buffer:

Types	Dead time t_1	Time constant (T63), t_2
all	440 ms	240 ms
PMP46/48	additional influence from the diaphragm seal	

Response time

- Cyclic: approx. 10 ms per request
- Acyclic: < 50 ms

All values are typical values.

Cycle time (update time)

The cycle time in a bus segment in cyclic data communication depends on the number of devices, the segment coupler used and the internal PLC cycle time.

Damping

4 to 20 mA

- Via DIP switch on the electronic insert, switch position "On" = 2 s, switch position "Off" = 0 s

4 to 20 mA HART

- Via switch on the electronic insert, switch position "On" = set value, switch position "Off" = 0 s
- Via handheld terminal or PC with operating program, continuous 0 to 40 s
- Factory setting: 2 s

PROFIBUS PA

- Via handheld terminal or PC with operating program, continuous 0 to 40 s
- Factory setting: 0.0 s

Power supply

Electrical connection

Note!

- When using the measuring device in hazardous areas, installation must comply with the corresponding national standards and regulations and the Safety Instructions or Installation or Control Drawings.
  → See also Page 82, "Safety conventions and icons" and "Installation/Control Drawings" sections.
- Protective circuits against reverse polarity, HF influences and overvoltage peaks are integrated.
- The shield or grounding (if present) must always be connected to the internal ground terminal in the housing.

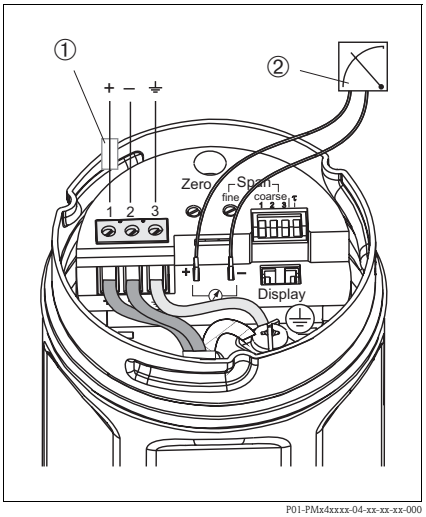

P01-PMx4xxxx-04-xx-xx-xx-000

Analog electronic insert

1 Devices with an ATEX II 1/3 D certificate (non-Ex-powered) must be protected with a 50 mA fuse (slow-blow).
2 4 to 20 mA test signal: you can take a 4 to 20 mA test signal via the terminal lugs without interrupting the measurement.

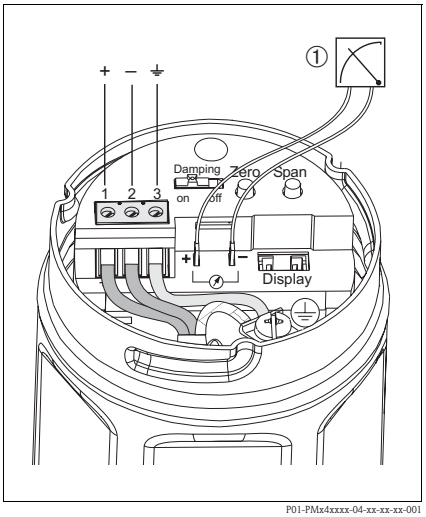

P01-PMx4xxxx-04-xx-xx-xx-001

4 to 20 mA HART electronic insert

1 4 to 20 mA test signal: you can take a 4 to 20 mA test signal via the terminal lugs without interrupting the measurement.

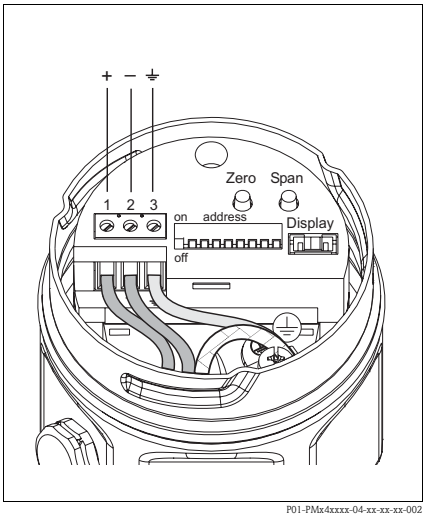

P01-PMx4xxxx-04-xx-xx-xx-002

PROFIBUS PA electronic insert

Devices with M12 connector

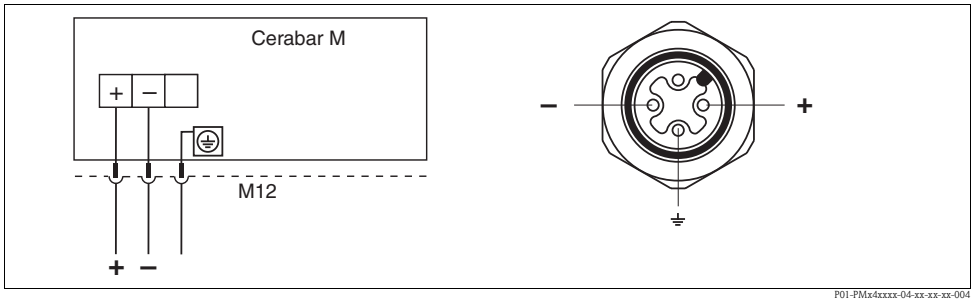

P01-PMx4xxxx-04-xx-xx-xx-004

Left: electrical connection for devices with M12 connector
Right: view of the connector at the device

Endress+Hauser offers the following accessories for devices with M12 connectors:

Plug-in jack M 12x1, straight
- Material: body PA; coupling nut CuZn, nickel-plated
- Degree of protection (plugged in): IP67 (NEMA 4X)
- Order number: 52006263

Plug-in jack M 12x1, elbowed
- Material: body PBT/PA; coupling nut GD-Zn, nickel-plated
- Degree of protection (plugged in): IP67 (NEMA 4X)
- Order number: 51006327

Cable 4x0.34 mm^2 with M12 socket, elbowed, screw plug, 5 m (16 ft) length
- Material: body PUR; coupling nut CuSn/Ni; cable PVC
- Degree of protection (plugged in): IP67 (NEMA 4X)
- Order number: 52010285

Devices with Harting connector Han7D

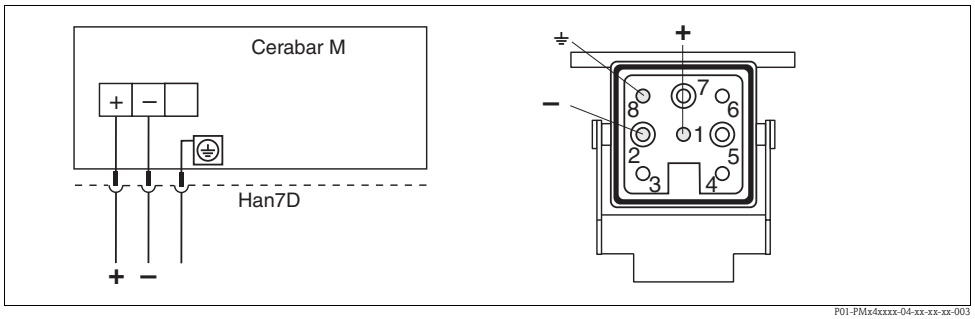

P01-PMx4xxxx-04-xx-xx-xx-003

Left: electrical connection for devices with Harting connector Han7D
Right: view of the connector at the device

Connecting the cable version

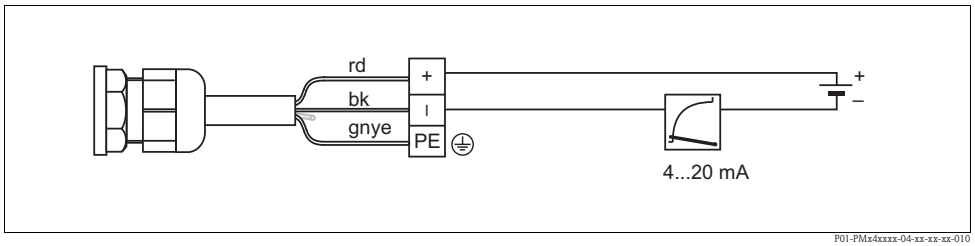

P01-PMx4xxxx-04-xx-xx-xx-010

rd = red, bk = black, gnye = green-yellow

Connecting the valve connector M16, ISO4400

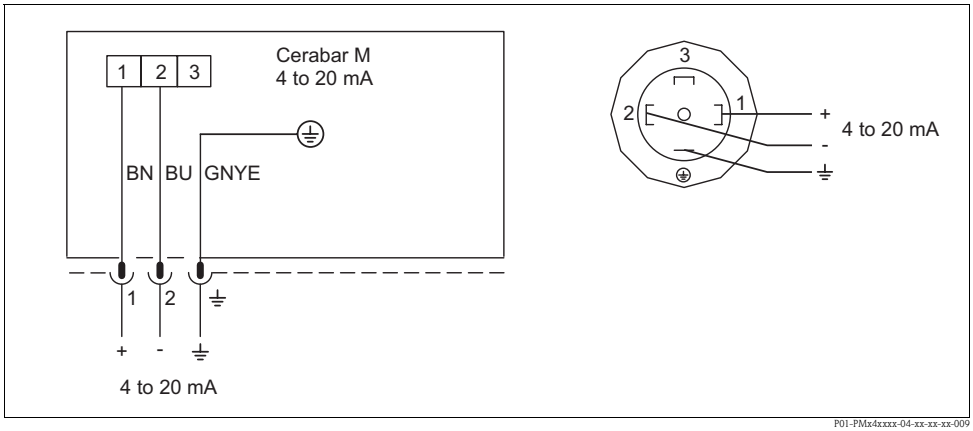

BN = brown, BU = blue, GNYE = green/yellow

Supply voltage

Note!
- When using the measuring device in hazardous areas, installation must comply with the corresponding national standards and regulations and the Safety Instructions or Installation or Control Drawings.
- All explosion protection data are given in separate documentation which is available upon request. The Ex documentation is supplied as standard with all devices approved for use in hazardous areas. → See also Page 82, "Safety conventions and icons" and "Installation/Control Drawings" sections.

4 to 20 mA

For non-hazardous areas: 11.5 to 45 V DC

4 to 20 mA HART

For non-hazardous areas: 11.5 to 45 V DC

PROFIBUS PA

For non-hazardous areas: 9 to 32 V DC

Current consumption

PROFIBUS PA: 11 mA ± 1 mA, switch-on current corresponds to IEC 61158-2, Clause 21

Cable entry

→ See also Page 67 ff, feature 20 "Housing; Electrical connection".

Cable specification

- Endress+Hauser recommends using shielded, twisted pair two-wire cables.
- Terminals for wire cross-sections 20 to 14 AWG (0.14 to 2.5 mm^2)
- Cable outer diameter: 0.2 to 0.35" (5 to 9 mm)

Residual ripple

4 to 20 mA and 4 to 20 mA HART

- Without impact on 4 to 20 mA signal up to ± 5% residual ripple within the permitted voltage range (according to HART hardware specification HCF_SPEC-54 (DIN IEC 60381-1))
- With HART Communicator or Commubox:
  Max. ripple (measured at 500 Ω) 47 to 125 Hz: U_{ss} = 200 mV
  Max. noise (measured at 500 Ω) 500 Hz to 10 kHz: U_{eff} = 2.2 mV

Performance characteristics – general

Reference operating conditions

- As per IEC 60770
- Ambient temperature range T_A = constant, in range: +21 to +33°C (+69.8 to +91.4°F)
- Humidity φ = constant, in range: 20 to 80% RH
- Ambient pressure p_U = constant, in range: 12 to 15 psi (860 to 1060 mbar)
- Position of measuring cell = constant, in range: horizontal ±1°
- Input of LOW SENSOR CALIBRATION and HIGH SENSOR CALIBRATION for lower-range value and upper-range value
- Membrane material PMC41 and PMC45: Al_2O_3 (aluminum oxide ceramic)
- Membrane material PMP41, PMP45, PMP46 and PMP48: AISI 316L SS/1.4435
- Filling oil: synthetic oil
- Supply voltage: 24 V DC ± 3 V DC
- Load for HART: 250 Ω
- Turn down: 1:1 to 10:1

Reference accuracy

Note!
In the case of overpressure measurement using absolute pressure sensors, the accuracy can be affected by fluctuating ambient air pressure.

Uncertainty of measurement for small absolute pressure measuring ranges

The smallest expanded uncertainty of measurement that can be returned by our calibration standards is 0.4% of the set span in the range 0.01 to 0.4 psi (1 to 30 mbar).

Long-term stability

- ±0.1% of URL/year
- ±0.25% of URL/3 years

Influence of the orientation

A position-dependent zero point shift can be corrected within the (extended) measuring range. → See also the following section "Raising and lowering the zero point", Page 25, "General installation instructions" section and Page 65 ff, "Installation instructions, diaphragm seal systems" section.

Raising and lowering the zero point

- 4 to 20 mA: ±10% within the extended measuring range
- 4 to 20 mA HART: as required within the extended measuring range
- PROFIBUS PA: as required within the extended measuring range

Examples for extended measuring limits and raising and lowering the zero point

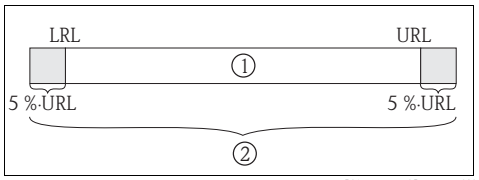

Case 1

Case 1:
- 4 to 20 mA HART or PROFIBUS PA
- And overpressure sensors with a lower-range limit (LRL) > -145 psi (–1 bar)

Example 1:
- Sensor measuring range: 0 to 150 psi (0 to 10 bar)
- Extended measuring range: -7.5 to 158 psi (–0.5 to 10.5 bar) (the zero point can be adjusted in this range)

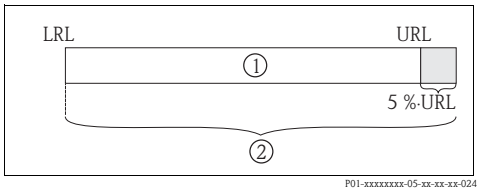

Case 2

Case 2:
- 4 to 20 mA HART or PROFIBUS PA
- Absolute pressure sensors and overpressure sensors with a lower-range limit (LRL) = -15 psi (–1 bar)

Example 2:
- Sensor measuring range: -15 to 150 psi (–1 to 10 bar)
- Extended measuring rang: -15 to 160 psi (–1 to 10.5 bar) (the zero point can be adjusted in this range)

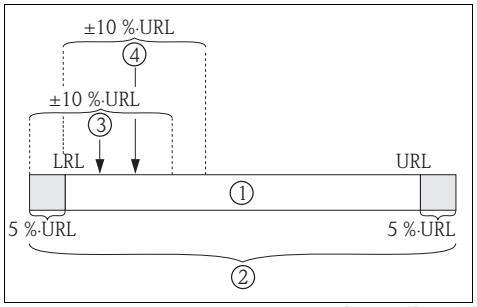

Case 3, example 3 and 4

1 Sensor measuring range
2 Extended measuring range
3 Pressure applied at the device, see Case 3, Example 3
4 Pressure applied at the device, see Case 3, Example 4
LRL Lower-range limit
URL Upper-range limit

Case 3:
- 4 to 20 mA

Example 3:
- Sensor measuring range: 0 to 150 psi (0 to 10 bar)
- Extended measuring range: -7 to 158 psi (–0.5 to 10.5 bar)
- A pressure of 7 psi (0.5 bar) is applied at the device. The zero point can be adjusted in the range -7 to 158 psi (–0.5 to 1.5 bar).

Example 4:
- Sensor measuring range: 0 to 150 psi (0 to 10 bar)
- Extended measuring range: -7 to 158 psi (–0.5 to 10.5 bar)
- A pressure of 15 psi (1 bar) is applied at the device. The zero point can be adjusted in the range 0 to 30 psi (0 to 2 bar).

Vibration effects

Within the reference accuracy vor vibration amplitudes below:
0 to 15 Hz: 0.16" (4 mm) (amplitude of distance)
15 to 150 Hz: 2 g (amplitude of acceleration)
150 to 2000 Hz: 1g (amplitude of acceleratrion)

Warm-up period

- 4 to 20 mA: 200 ms
- 4 to 20 mA HART: 1 s
- PROFIBUS PA: 1 s

Rise time (T90)

- 4 to 20 mA: 60 ms
- 4 to 20 mA HART: 220 ms
- PROFIBUS PA: 220 ms

Settling time

- 4 to 20 mA: 180 ms
- 4 to 20 mA HART: 600 ms
- PROFIBUS PA: 600 ms

Performance characteristics – ceramic diaphragm

Reference accuracy

Reference accuracy comprises non-linearity after limit point setting, hysteresis and non-reproducibility as per IEC 60770.

PMC41, PMC45:

Measuring cell	% of the set span
1.5 and 6 psi (100 mbar, 400 mbar) ("1C", "1F", "5C", "5F" and "2F" version for feature 30 "Sensor range"; MWP; OPL)	■ ±0.2 x TD ■ Optional [1]: ±0.1 % non-linearity of set span x TD
15, 60, 150, 600 psi (1 bar, 4 bar, 10 bar, 40 bar)	■ ±0.2 ■ Optional [1]: ±0.1 % non-linearity of set span

1) → See also Page 67 ff, chapter "Ordering information" section, feature 40 "Calibration; Unit", version "C"

Note!
In the case of overpressure measurement using absolute pressure sensors, the accuracy can be affected by fluctuating ambient air pressure.

Thermal change of the zero output and the output span

4 to 20 mA

–10...+60 °C (+14 to +140°F)	–40...–10 °C, +60...+85 °C (-40 to +14°F, +140 to +185°F)	+85...+125 °C (+185 to +257°F) (only PMC45)	% of the set span
X	—	—	■ ±(0.3 x TD + 0.3)
—	X	—	■ ±(0.5 x TD + 0.5)
—	—	X	■ ±(0.8 x TD + 0.8)

4 to 20 mA HART, PROFIBUS PA

–10...+60 °C (+14 to +140°F)	–40...–10 °C, +60...+85 °C (-40 to +14°F, +140 to +185°F)	+85...+125 °C (+185 to +257°F) (only PMC45)	% of the set span
X	—	—	■ ±(0.2 x TD + 0.2)
—	X	—	■ ±(0.4 x TD + 0.4)
—	—	X	■ ±(0.6 x TD + 0.6)

Temperature coefficient (T_K) for zero output and output span

If the value for the temperature coefficient exceeds the value for the thermal change, the thermal change automatically applies.

4 to 20 mA

–10...+60 °C (+14 to +140°F)	–40...–10 °C, +60...+85 °C (-40 to +14°F, +140 to +185°F)	+85...+125 °C (+185 to +257°F) (only PMC45)	% of URL/10 K
X	—	—	■ ±0.15
—	X	—	■ ±0.2
—	—	X	■ ±0.25

4 to 20 mA HART, PROFIBUS PA

–10...+60 °C (+14 to +140°F)	–40...–10 °C, +60...+85 °C (-40 to +14°F, +140 to +185°F)	+85...+125 °C (+185 to +257°F) (only PMC45)	% of URL/10 K
X	—	—	■ ±0.08
—	X	—	■ ±0.1
—	—	X	■ ±0.12

Performance characteristics – metal diaphragm

Reference accuracy

Reference accuracy comprises non-linearity after limit point setting, hysteresis and non-reproducibility as per IEC 60770.

PMP41, PMP45	PMP46, PMP48	% of the set span
X	—	■ 0.2 ■ Optional[1)]: ±0,1 % non-linearity of set span
—	X	■ 0.2

1) → See also Page 67 ff, chapter "Ordering information" section, feature 40 "Calibration; Unit", version "C"

Note!
In the case of overpressure measurement using absolute pressure sensors, the accuracy can be affected by fluctuating ambient air pressure.

Thermal change of the zero output and the output span

4 tom 20 mA

–10...+60 °C (+14 to +140°F)	–40...–10 °C, +60...+85 °C (-40 to +14°F, +140 to +185°F)	+85...+125 °C (+185 to +257°F) (only PMP45)	% of the set span
X	—	—	■ ±(0.3 x TD + 0.3)
—	X	—	■ ±(0.5 x TD + 0.5)
—	—	X	■ ±(0.8 x TD + 0.8)

4 to 20 mA HART, PROFIBUS PA

–10...+60 °C (+14 to +140°F)	–40...–10 °C, +60...+85 °C (-40 to +14°F, +140 to +185°F)	+85...+125 °C (+185 to +257°F) (only PMP45)	% of the set span
X	—	—	■ ±(0.2 x TD + 0.2)
—	X	—	■ ±(0.4 x TD + 0.4)
—	—	X	■ ±(0.6 x TD + 0.6)
PMP46, PMP48: the data apply to the transmitter without a diaphragm seal or capillary line.			

Note!
When using a PMP46/48, the influence of the respective diaphragm seal must also be taken into account. (→ See also Page 59 ff "Planning instructions for diaphragm seal systems", Page 45 ff "Process connections PMP46 (with metal measuring diaphragm)" and Page 51 ff "Process connections PMP48 (with metal measuring diaphragm)").

Temperature coefficient (T_K) for zero output and output span

If the value for the temperature coefficient exceeds the value for the thermal change, the thermal change automatically applies.

4 to 20 mA

–10...+60 °C (+14 to +140°F)	–40...–10 °C, +60...+85 °C (-40 to +14°F, +140 to +185°F)	+85...+125 °C (+185 to +257°F) (only PMP45)	% of URL/10 K
X	—	—	■ ±0.15
—	X	—	■ ±0.2
—	—	X	■ ±0.25

4 to 20 mA HART, PROFIBUS PA

–10...+60 °C (+14 to +140°F)	–40...–10 °C, +60...+85 °C (-40 to +14°F, +140 to +185°F)	+85...+125 °C (+185 to +257°F) (only PMP45)	% of URL/10 K
X	—	—	■ ±0.08
—	X	—	■ ±0.1
—	—	X	■ ±0.12
PMP46, PMP48: the data apply to the transmitter without a diaphragm seal or capillary line.			

Operating conditions (installation)

General installation instructions

- The position-dependent zero point shift can be corrected directly at the device by means of a key or a potentiometer. Diaphragm seals also shift the zero point, depending on the installation position (→ see also Page 65, "Installation instructions, diaphragm seal systems" section).
- Endress+Hauser offers a mounting bracket for installing on pipes. → See also Page 26, "Wall and pipe-mounting" section.
- The local display can be rotated in 90° stages.
- Devices with EHEDG approval: these devices must be installed in accordance with the Hygienic Equipment Design Criteria to meet the requirements of EHEDG.
- For PMP46, PMP48: see Page 65, "Installation instructions, diaphragm seal system" section.

Measuring arrangement for devices without a diaphragm seal – PMC41, PMC45, PMP41, PMP45

Cerabar M devices without diaphragm seals are mounted as per the norms for a manometer (DIN EN 839-2). We recommend the use of shutoff devices and siphons. The orientation depends on the measuring application.

Pressure measurement in gases

- Mount Cerabar M with shutoff device above the tapping point so that any condensate can flow into the process.

Pressure measurement in steam

- Mount Cerabar M with siphon above the tapping point.
  The siphon reduces the temperature to almost ambient temperature.
- Fill the siphon with liquid before commissioning.

Pressure measurement in liquids

- Mount Cerabar M with shutoff device below or at the same level as the tapping point.
- Do not mount the device at the following positions:
  In the fill curtain, in the tank outlet or at a point in the container which could be affected by pressure pulses from an agitator or a pump.

Mounting with temperature isolator

Endress+Hauser recommends the use of temperature isolators in the event of constant extreme fluid temperatures which lead to the maximum permissible electronics temperature of +85°C (+185°F) being exceeded.
Depending on the filling oil used, Cerabar M devices with temperature isolators can be used for maximum temperatures of up to 260°C (+500°F). → For the temperature application limits of filling oils, see Page 60, "Diaphragm seal filling oil" section.
To minimize the influence of rising heat, Endress+Hauser recommends the device be mounted horizontally or with the housing pointing downwards.
The additional installation height also brings about a zero point shift of maximum 0.3 psi (21 mbar) due to the hydrostatic column in the temperature isolator. You can correct this zero point shift.

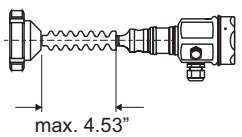

P01-PMP4xxxx-11-xx-xx-xx-006

Wall and pipe-mounting

Endress+Hauser offers a mounting bracket for installing on pipes or walls for PMC41, PMP41, PMP46 and PMP48. You can order the mounting bracket either via the order code (→ see Page 68 ff, feature 60, "Additional option") or separately as an accessory.

PMC41
- Order number: 919806-0000
- Material: AISI 304 SS(1.4301)

PMP41, PMP46 and PMP48
- Order number: 52001402
- Material: AISI 304 SS (1.4301)

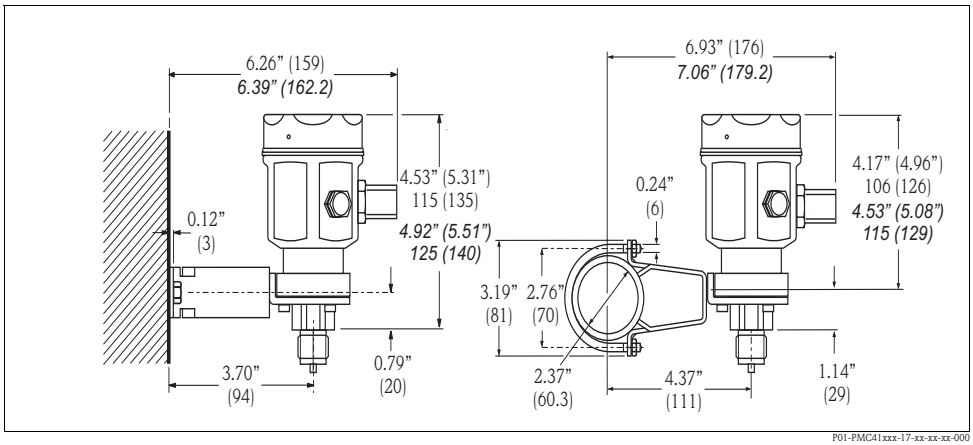

Wall and pipe-mounting PMC41

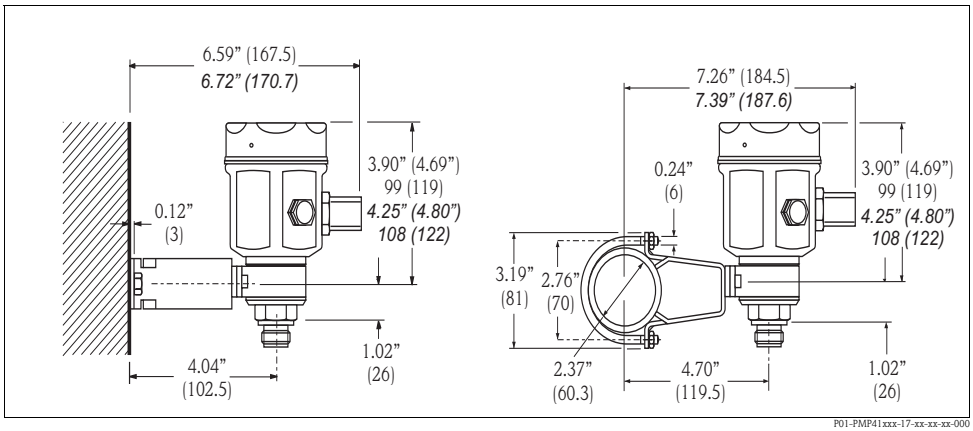

Wall and pipe-mounting PMP41

The dimensions in brackets apply to housings with a raised cover (for optional display). Dimensions written in italics apply to devices with an aluminum housing.

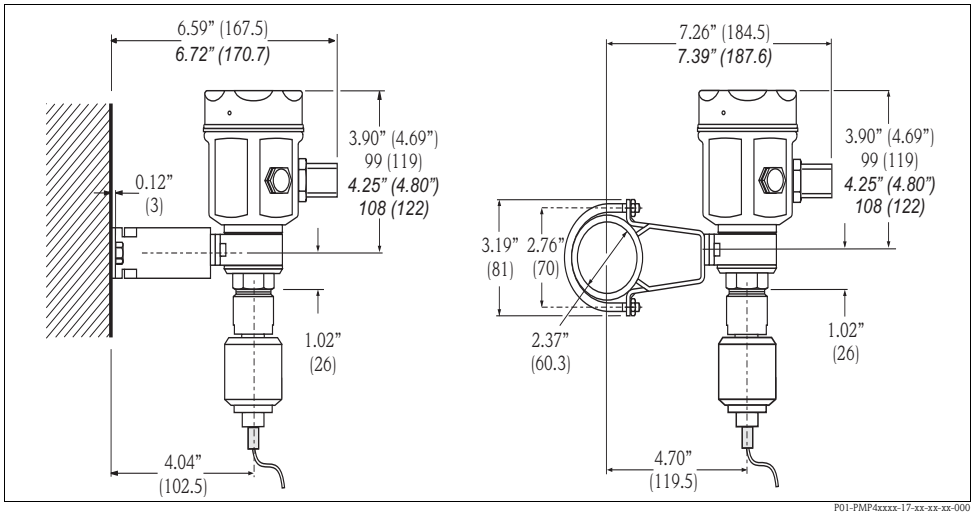

Wall and pipe-mounting PMP46/PMP48

The dimensions in brackets apply to housings with a raised cover (for optional display). Dimensions written in italics apply to devices with an aluminum housing.

Oxygen applications

Oxygen and other gases can react explosively to oils, grease and plastics, such that, among other things, the following precautions must be taken:
– All components of the system, such as measuring devices, must be cleaned in accordance with BAM requirements (DIN 19247). (BAM = Federal Institute for Materials Research and Testing).
– Depending on the materials used, a certain maximum temperature and a maximum pressure must not be exceeded in oxygen applications. The maximum temperature T_{max} for oxygen applications is 60°C (+140°F).

The devices suitable for gaseous oxygen applications are listed in the following table, indicated by p_{max}.

Order code for devices cleaned for oxygen applications	**p_{max} for oxygen applications**
PMC41 – * ** ** * * * ** 6, for devices with sensors, nominal value < 150 psi (10 bar)	Overpressure limit (OPL) of sensor[1]
PMC41 – * ** ** * * * ** 6, for devices with sensors, nominal value ≥150 psi (10 bar)	435 psi (30 bar)
PMP41 – * ** ** * * * ** C, for devices with sensors, nominal value < 600 psi (40 bar)	Overpressure limit (OPL) of sensor[1]
PMP41 – * ** ** * * * ** C, for devices with sensors, nominal value ≥ 600 psi (40 bar)	2320 psi (160 bar)
PMP46 – * ** ** * * * ** N	Depends on the element of the selected components which has the lowest pressure rating: overpressure limit (OPL) of sensor[1] or process connection (1.5 x PN)
PMP48 – * ** ** * * * ** N *	Depends on the element of the selected components which has the lowest pressure rating: overpressure limit (OPL) of sensor [1], process connection (1.5 x PN) or fill fluid (160 bar)

1) → See Page 67 ff "Ordering information", feature 30 "Sensor range; MWP; OPL".

PWIS-free applications

Special cleaning of transmitter to remove paint-wetting impairment substances e.g. for use in paint shops
→ see Page 67 ff "Ordering information", feature 80 "Sensor seal".

Ultrapure gas applications

Endress+Hauser also provides devices which have been cleaned of oil and grease for special applications, such as ultrapure gas. No special restrictions regarding the process conditions apply to these devices.

→ See also Page 68, PMC41: feature 80 "Sensor seal".
→ See also Page 73, PMP41: feature 80 "Seal; Fill fluid".

Operating conditions (environment)

Ambient temperature limits

- 40 to +85°C (–40 to +185°F)
- Local display 4 to 20 mA: –30 to +80°C (–22 to +176°F)
- Local display 4 to 20 mA HART, PROFIBUS PA: –25 to +70°C (–13 to +158°F)
  Lower temperatures minimize the speed and contrast of the display.

Note!
For high-temperature applications, either a PMP46/48 with a temperature isolator or with a capillary can be used. If vibrations also occur in the application, Endress+Hauser recommends you use a PMP46/48 with a capillary. If a PMP46/48 with a temperature isolator or capillary is used, we recommend a suitable bracket for mounting (see "Wall and pipe-mounting" section on Page 26).

For devices for use in hazardous areas, see Safety Instructions, Installation or Control Drawing (ZDs).
(→ See also Page 82, "Safety conventions and icons" and "Installation/Control Drawing" sections)

Storage temperature range

- -40 to +100°C (–40 to +212°F)
- Onsite display: –40 to +80°C (–40 to +176°F)

Degree of protection

- → See Page 67 ff, feature 20 "Housing; Electrical connection".

Climate class

Class 4K4H (air temperature: –20 to 55°C / –4 to 131°F), relative humidity: 4 to 100%)
fulfilled as per DIN EN 60721-3-4 (condensation possible)

Electromagnetic compatibility

- Interference emission as per EN 61326 for class B equipment, interference immunity as per EN 61326 appendix A (industrial use) and NAMUR Recommendation on EMC (NE 21).
- Maximum measured error: < 0.5 % of span (100 mbar sensors: < 1.25% of span)
- In the event of surge influence (EN 61000-4-5), deviations greater than the specified measured error can occur briefly.
- All measurements were performed with a turn down (TD) = 1:1.

Operating conditions (process)

Process temperature limits

Note!
- For oxygen applications, see Page 27, "Oxygen applications" section.
- PMC41 and PMC45: extreme jumps in temperature can result in temporary measuring errors. Temperature compensation takes effect after several minutes. Internal temperature compensation is faster the smaller the temperature jump and the longer the time interval.

PMC41 (with ceramic measuring diaphragm)

- -40 to +100°C (–40 to +212°F)
- Observe temperature operating range of the seal. → See also the following section "Temperature operating range, seals".

PMC45 (with ceramic measuring diaphragm)

- –40 to +125°C (–40 to +257°F) (+150°C (+302°F) for max. 1 hour)
- Observe temperature operating range of the seal. → See also the following section "Temperature operating range, seals".

PMP41 (with metal measuring diaphragm)

- -40 to +100°C (–40 to +212°F)
- Observe temperature operating range of the seal. → See also the following section "Temperature operating range, seals".

PMP45 (with metal measuring diaphragm)

- –40 to +125°C (–40 to +257°F); +150°C (+302°F) for max. 1 hour

PMP46 and PMP48 (with metal measuring diaphragm)

- –70 to +400°C (-94 to +752°F), depends on the diaphragm seal and filling oil
  Observe the temperature application limits of the diaphragm seal oil. → See also Page 60, "Diaphragm seal filling oils" section.
- PMP48 with PTFE coating: –50 to +205°C (-58 to + 401°F)

Temperature operating range, seals

PMC41 (with ceramic measuring diaphragm)

Version for feature 80 in the order code	Seal	Temperature operating range
1	FKM Viton	–20 to +100°C (–4 to +212°F)
2	NBR	–20 to +80°C (–4 to +176°F)
4	EPDM	–20 to +100°C (–4 to +212°F)
C	Chemraz, Compound 505	–10 to +100°C (+14 to 212°F)
7	Kalrez, Compound 4079	+5 to +100°C (+41 to 257°F)
M	Kalrez, cleaned for PWIS-free applications	+5 to +100°C (+41 to 257°F)
A	FKM Viton, cleaned from oil + grease	–10 to +100°C (+14 to 212°F)
6	FKM Viton, cleaned for oxygen service	–10 to +60°C (+14 to 140°F)
L	FKM Viton, cleaned for PWIS-free applications	–10 to +60°C (+14 to 140°F)
9	Silicone to be ordered as special version	–40 to +100°C (–40 to +212°F)

PMC45 (with ceramic measuring diaphragm)

Version for feature 80 in the order code	Seal	Temperature operating range
1	FKM Viton	–20 to +125°C/150°C [1)] (–4 to +257°F/302°F)
4, [2)]	EPDM (FDA 21CFR177.2600); 3A Class II; USP Class VI	–20 to +125 °C/150 °C [1)] (–4 to +257°F/302°F)

Version for feature 80 in the order code	Seal	Temperature operating range
4 [3]	EPDM	–20 to +125°C (–4 to +257°F)
7	Kalrez, Compound 4079	+5 to +125°C/150°C [1] (41 to 257/302°F) [1]
C	Chemraz, Compound 505	–10 to +125°C/150°C [1] (14 to 257/302°F) [1]
2 [2] [3]	HNBR (FDA 21CFR177.2600); 3A Class II; KTW; AFNOR; BAM	–20 to +125°C (–4 to +257°F)
2 [3]	NBR	–20 to +80°C (–4 to +176°F)
M	Kalrez, cleaned for PWIS-free applications	+5 to +125°C (+41 to 257°F)
A	FKM Viton, oil and grease removed	–10 to +125°C (+14 to 257°F)
L	FKM Viton, cleaned for PWIS-free applications	–10 to +125°C (+14 to 257°F)
9	Silicone to be ordered as special version	–40 to +125°C (–40 to +212°F)

1) 150°C (302°F) for max. 1 hour

2) These seals are used for devices with 3A-approved process connections. → See also Page 70 "Ordering information", feature 70 "Process connections".

3) For devices with NBR or HNBR seals, the values for "Thermal change" (→ see Page 23) must be multiplied by a factor of 3.

With applications involving saturated steam, a Cerabar M with a metal diaphragm seal must be used.

PMP41 (with metal measuring diaphragm)

Version in the order code	Seal	Temperature operating range
1	FKM Viton	–20 to +100°C (–4 to +212°F)
4	FKM Viton, cleaned from oil + grease	–20 to +100°C (–4 to +212°F)
H	FKM Viton	–20 to +100°C (–4 to +212°F)
P	PTFE + Alloy C	–40 to +100°C (–40 to +212°F)
F	NBR	–20 to +80°C (–4 to +176°F)

Pressure specifications

- The maximum pressure for the measuring device depends on the element with the lowest pressure rating, see the following sections:
  – → Page 12 ff, "Measuring range"
  – → "Mechanical construction" section
  The MWP (maximum working pressure) is specified on the nameplate. This value refers to a reference temperature of 20°C (68°F) or 100°F for ANSI flanges and may be applied to the device for an unlimited time period. Observe temperature dependency.
- The pressure values permitted at higher temperatures can be found in the following standards:
  – EN 1092-1: 2001 Tab. 18 [1]
  – ASME B 16.5a – 1998 Tab. 2-2.2 F316
  – ASME B 16.5a – 1998 Tab. 2.3.8 N10276
  – JIS B 2220.
- The test pressure corresponds to the overpressure limit (OPL) of the device = MWP x 1.5 [2].
- The Pressure Equipment Directive (EC Directive 97/23/EC) uses the abbreviation "PS". The abbreviation "PS" corresponds to the MWP (maximum working pressure) of the measuring device.
- In the case of sensor range and process connection combinations where the OPL of the process connection is smaller than the nominal value of the sensor, the device is set at the factory to the OPL value of the process connection at the very maximum. If you want to use the entire sensor range, select a process connection with a higher OPL value (1.5 x PN; PN = MWP).
- In oxygen applications, the values for "p_{max} and T_{max} for oxygen applications" as per Page 27, "Oxygen applications" may not be exceeded.

1) With regard to their stability-temperature property, the materials 1.4435 and 1.4404 are grouped together under 13EO in EN 1092-1 Tab. 18. The chemical composition of the two materials can be identical.

2) The equation does not apply for PMP41, PMP45 and PMP48 with a 1450 psi (100 bar) measuring cell.

Mechanical construction

Dimensions of stainless steel housing

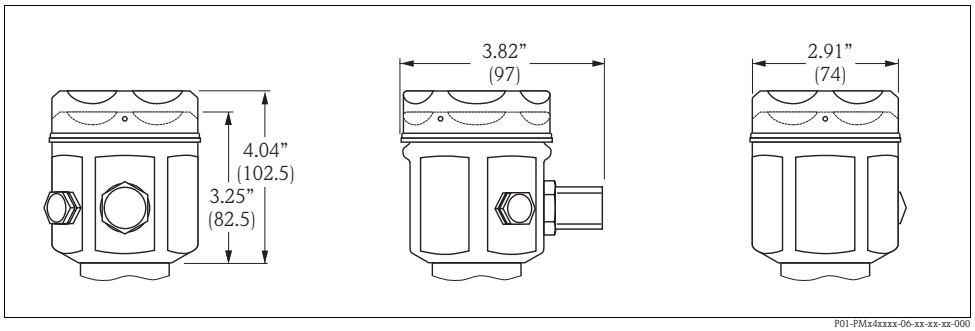

Dimensions of aluminum housing

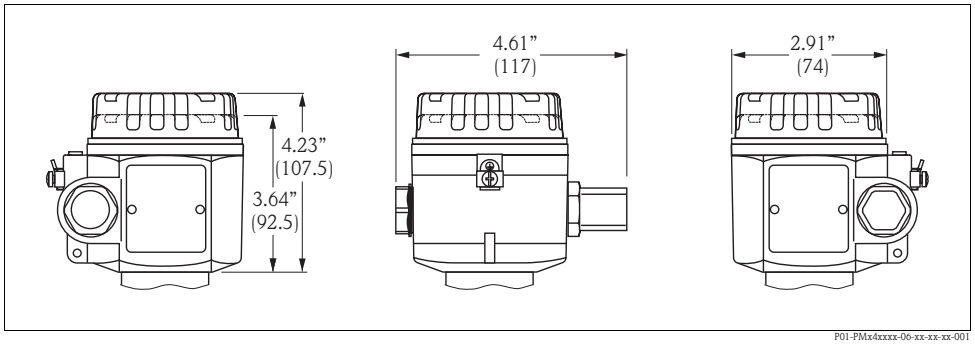

General Note on flanges

The roughness of the surface in contact with the medium, including the sealing surface of the flanges (all standards), made of Hastelloy C, Monel or Tantalum is Ra 0.8.
Lower roughnesses are available on request.

Process connections PMC41 (with ceramic measuring diaphragm)

Note!
- The installation heights in brackets apply to housings with a raised cover (for optional display). Installation heights written in italics apply to devices with an aluminum housing.

Thread, inner diaphragm

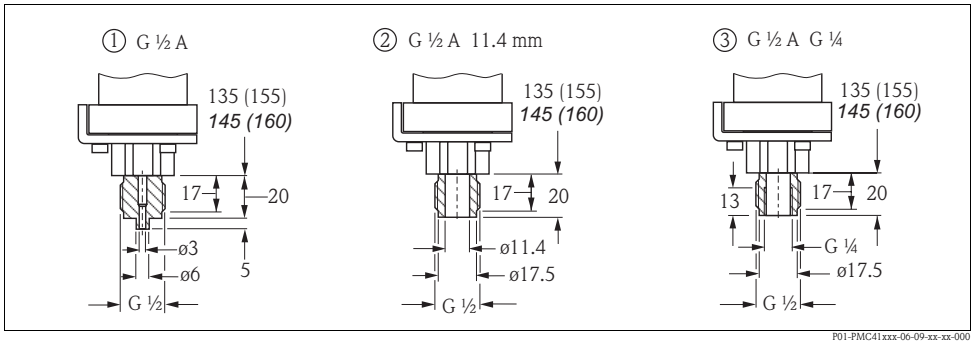

Process connections PMC41, thread ISO 228

1 Thread ISO 228 G 1/2 A, version 1M: AISI 316L, version 2M: Alloy C276 (2.4819)
2 Thread ISO 228 G 1/2 A bore 11.4 mm, version 1R: AISI 316L
3 Thread ISO 228 G 1/2 A G 1/4 (female), version 1P: AISI 316L

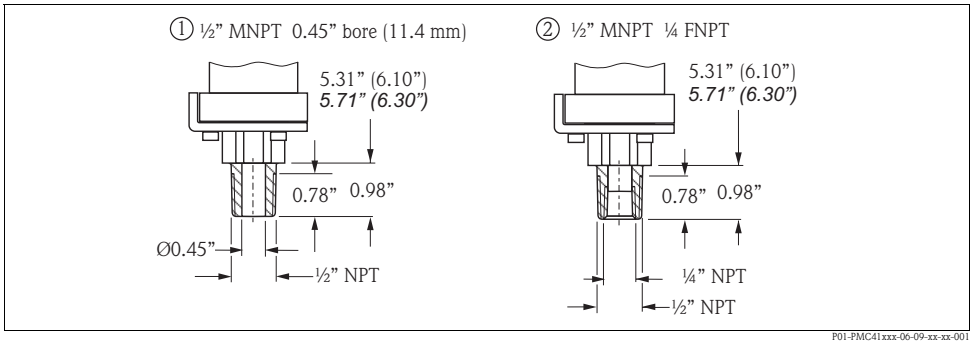

Process connections PMC41, thread ANSI

1 Thread ANSI 1/2 MNPT bore 11.4 mm, version 1A: AISI 316L
2 Thread ANSI 1/2 MNPT 1/4 FNPT, version 1N: AISI 316L, version 2N: Alloy C276 (2.4819)

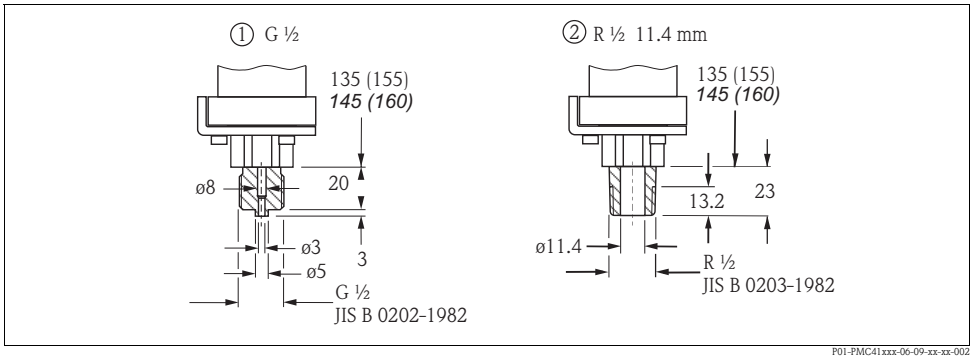

Process connections PMC41, thread JIS

1 Version 1S: thread JIS B0202 G 1/2 (male), material: AISI 316L
2 Version 1K: thread JIS B0203 R 1/2 (male) bore 11.4 mm, material: AISI 316L

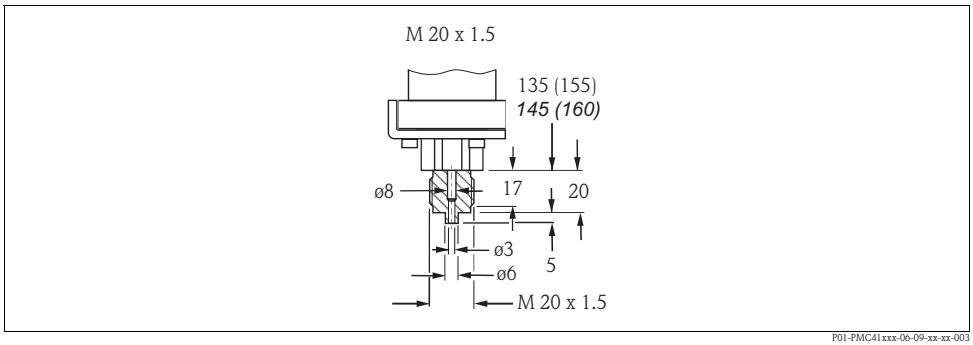

Process connection PMC41, version 1T: thread DIN 13 M20 x 1.5 bore 3 mm, material AISI 316L

Process connections PMC45 (with ceramic measuring diaphragm)

Note!

- The installation heights in brackets apply to housings with a raised cover (for optional display). Installation heights written in italics apply to devices with an aluminum housing.
- Devices with an aluminum housing, raised cover, threaded connection or hygiene connection weigh approx. 2.1 kg (4.6 lb). The weights for devices with an aluminum housing, raised cover and flange are given in the tables from Page 37 onwards. Devices with a stainless steel housing weigh approx. 300 g (0.7 lb) less.
- Many process connections with an EPDM or HNBR seal are 3A-approved for PMC45. This means that a 3A-approved process connection with an EPDM or HNBR seal must be selected when ordering for the 3A approval for the PMC45 version to be valid. → For ordering information on EPDM or HNBR seals, see Page 70 "Ordering information PMC45", feature 80 "Sensor seal", version 2 or 4.

Thread, flush-mounted diaphragm

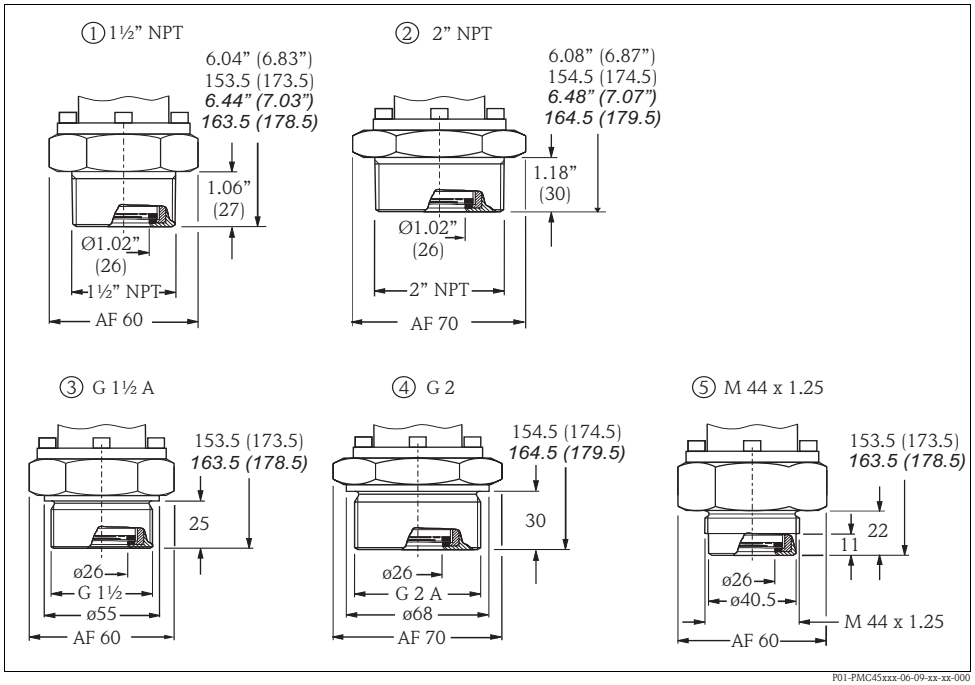

Process connections PMC45, threaded connection, material AISI 316L

1 Version AG: thread ISO 228 G1 1/2 A
Endress+Hauser also offers welding necks for this process connection. See the following section.
2 Version AR: thread ISO 228 G 2 A
3 Version BF: thread ANSI 1 1/2 MNPT
4 Version BR: thread ANSI 2 MNPT
5 Version XK: thread DIN 13 M 44x1.25

Welding neck G 1 1/2

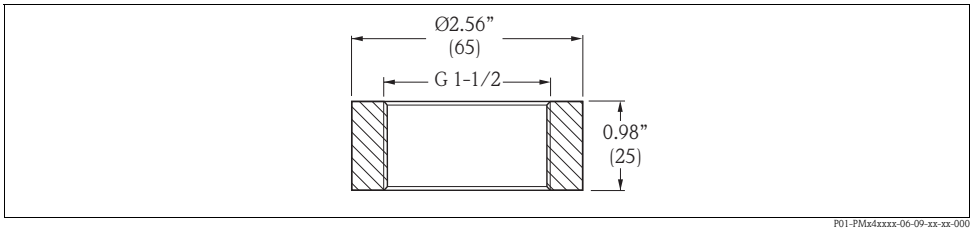

Welding neck for process connection thread ISO 228 G 1 1/2 A (version AG)
order no.: 52024469, order no. with 3.1 inspection certificate: 52024470

Note!
Endress+Hauser offers a pressure sensor dummy for the welding necks with order numbers 52024469 and 52024470. Order number for pressure sensor dummy: 52024471

Tri-Clamp, flush-mounted diaphragm

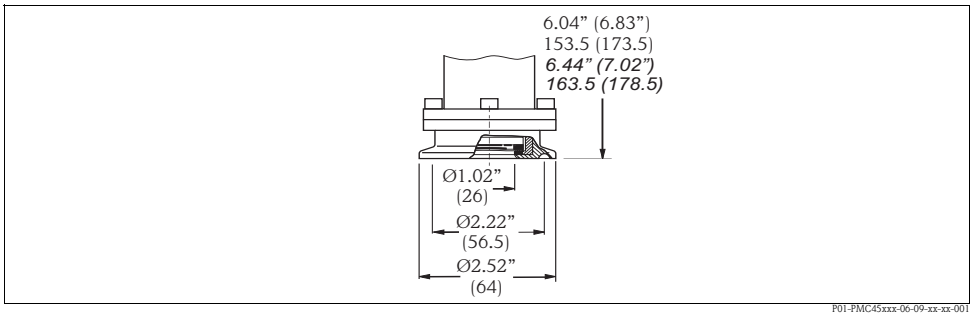

Process connection PMC45, version DL: Tri-Clamp, ISO 2852 DN 51 (2")/DIN 32676 DN 50, material AISI 316L, EHEDG, 3A with HNBR or EPDM seal

Hygienic connections, flush-mounted diaphragm

Many process connections with an EPDM or HNBR seal are approved for the PMC45 in accordance with the guidelines of the 3A Sanitary Standard. To ensure that the 3A approval applies to the PMC45 version, a 3A-approved process connection together with an EPDM or HNBR seal must be selected when ordering.
→ For ordering information on EPDM or HNBR seals, see Page 69 "Ordering information PMC45", feature 80 "Seal".

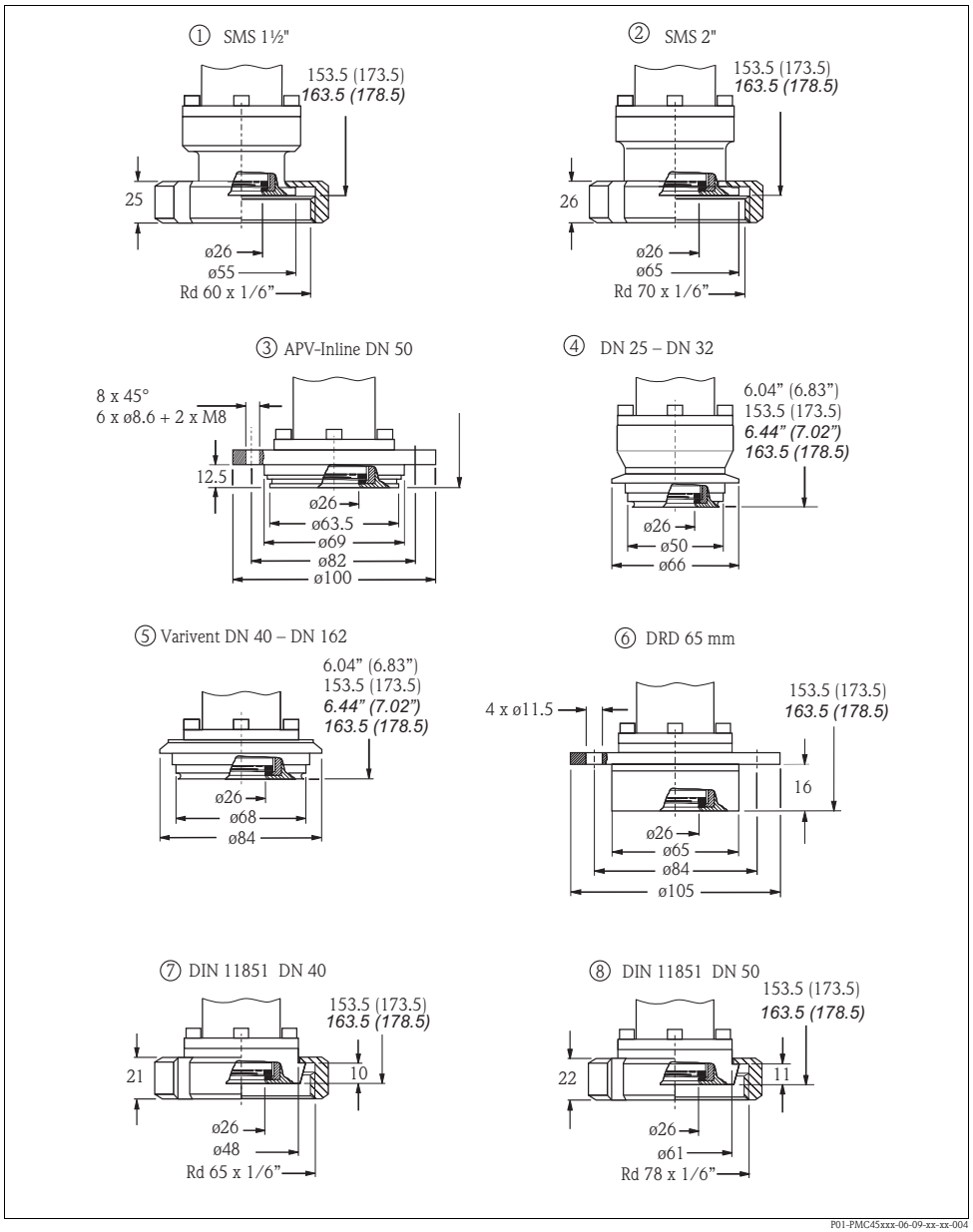

P01-PMC45xxx-06-09-xx-xx-004

Process connections PMC45, hygienic connections, material AISI 316L
Surface roughness of the surfaces in contact with the medium $R_a \leq 0.8$ µm as standard. Lower surface roughness on request.

1 Version EG: SMS 1 1/2" PN 25, EHEDG, 3A with HNBR or EPDM seal
2 Version EL: SMS 2" PN 25, EHEDG, 3A with HNBR or EPDM seal
3 Version HL: APV-Inline DN 50 PN 40, EHEDG, 3A with HNBR or EPDM seal
4 Version LB: Varivent type F for pipes DN 25 – DN 32 PN 40, EHEDG, 3A with HNBR or EPDM seal
5 Version LL: Varivent type N for pipes DN 40 – DN 162 PN 40, EHEDG, 3A with HNBR or EPDM seal
6 Version KL: DRD DN50 (65 mm) PN25, 3A with HNBR or EPDM seal;
Endress+Hauser offers a welding flange with PTFE seals for flush-mounted installation of a device with a DRD flange. See the following graphic.
7 Version AH: DIN 11851 DN 40 PN 40, 3A with HNBR or EPDM seal
8 Version AL: DIN 11851 DN 50 PN 25, 3A with HNBR or EPDM seal

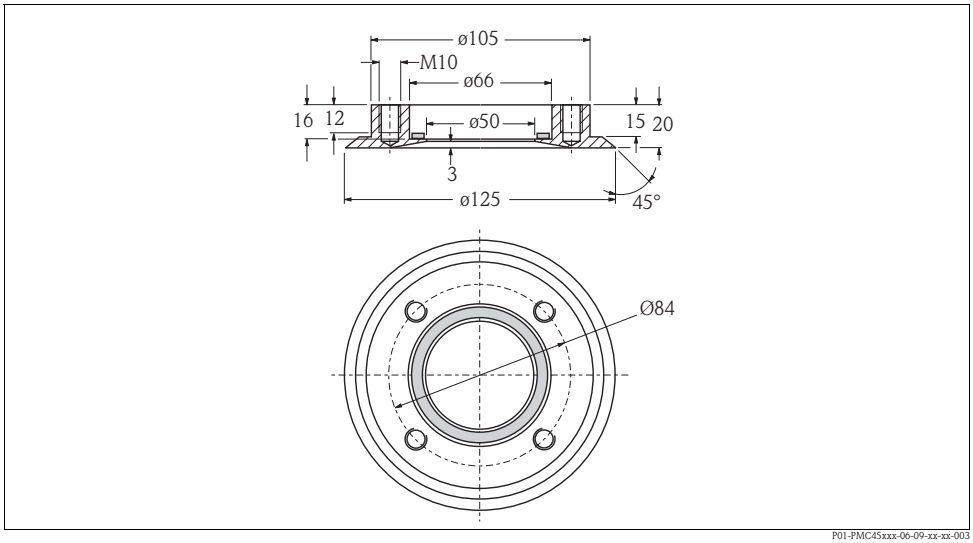

Welding flange for flush-mounted installation for devices with a DRD flange.
Order number: 52002041, material: AISI 316L/1.4435;
Order number with 3.1: 52011899, material: AISI 316L/1.4435;
Only PTFE sealing ring: order number: 52024228

Aseptic couplings

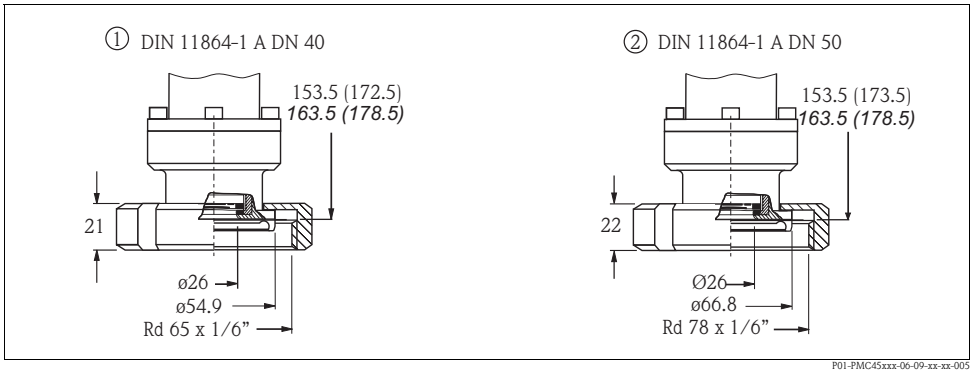

Process connections PMC45, aseptic couplings, material AISI 316L
Surface roughness of the surfaces in contact with the medium $R_a \leq 0.8$ µm as standard. Lower surface roughness on request.

1 Version AS: aseptic DIN 11864–1 form A DN 40 for pipes to DIN 11850, EHEDG, 3A with HNBR/EPDM seal
2 Version AT: aseptic DIN 11864–1 form A DN 50 for pipes to DIN 11850, EHEDG, 3A with HNBR/EPDM seal

EN/DIN flanges, connection dimensions as per EN 1092-1/DIN 2527

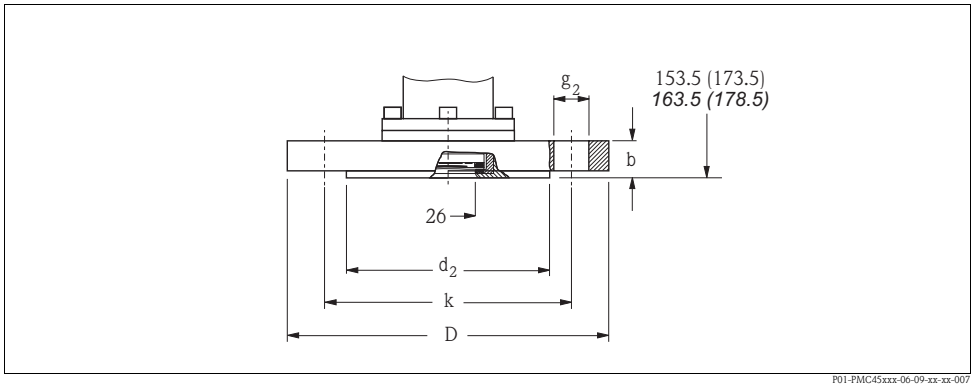

Process connection PMC45, EN/DIN flange

	Flange							Bolt holes			
Version	**Material**	**Nominal diameter** [mm]	**Nominal pressure** [bar]	**Shape** [1]	**Diameter D** [mm]	**Raised face**	**Thickness b** [mm]	**Quantity**	**Diameter g_2** [mm]	**Bolt circle k** [mm]	**Max. total weight** [kg]
EK	AISI 316L	DN 50	PN 10-40	B1 (D)	165	102	20	4	18	125	3.3
WK	AISI 316L[2]			–		–					
EU	AISI 316L	DN 80	PN 10-40	B1 (D)	200	138	24	8	18	160	5.8
WU	AISI 316L [2]			–		–					

1) Designations as per DIN 2527 in brackets

2) ECTFE coating on AISI 316L. Avoid electrostatic charge at the plastic surfaces when using in hazardous areas.

ANSI flanges, connection dimensions as per ANSI B 16.5, raised face RF

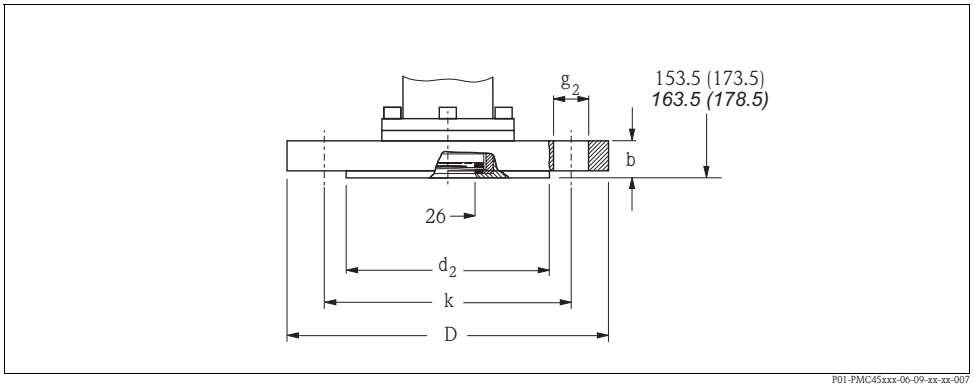

Process connection PMC45, ANSI flange with raised face RF

	Flange						Bolt holes			
Version	**Material**	**Nominal diameter**	**Class**	**Diameter** **D**	**Thickness** **b**	**Raised face** **g**	**Quantity**	**Diameter** **g_2**	**Bolt circle** **k**	**Max. total weight**
		inches	[lb./sq.in]	in [mm]	in [mm]	in [mm]		in [mm]	in [mm]	lbs [kg]
K1	AISI 316/ 316L [1]	1 1/2	150	5 [127]	0.69 [17.5]	2.88 [73.2]	4	0.62 [15.7]	3.88 [98.6]	7.3 [3.3]
K2	AISI 316/ 316L [1]	1 1/2	300	6.12 [155.4]	0.81 [20.6]	2.88 [73.2]	4	0.88 [22.4]	4.5 [114.3]	7.3 [3.3]
KJ	AISI 316/ 316L [1]	2	150	6 [152.4]	0.75 [19.1]	3.62 [91.9]	4	0.75 [19.1]	4.75 [120.7]	7.3 [3.3]
KK	AISI 316/ 316L [1]	2	300	6.5 [165.1]	0.88 [22.4]	3.62 [91.9]	8	0.75 [19.1]	5 [127]	9.0 [4.1]
KU	AISI 316/ 316L [1]	3	150	7.5 [190.5]	0.94 [23.9]	5 [127]	4	0.75 [19.1]	6 [152.4]	12.8 [5.8]
KV	AISI 316/ 316L [1]	3	300	8.25 [209.5]	1.12 [28.4]	5 [127]	8	0.88 [22.4]	6.62 [168.1]	17.4 [7.9]
KW	AISI 316/ 316L [1]	4	150	9 [228.6]	0.94 [23.9]	6.19 [157.2]	8	0.75 [19.1]	7.5 [190.5]	17.4 [7.9]
KX	AISI 316/ 316L [1]	4	300	10 [254]	1.25 [31.8]	6.19 [157.2]	8	0.88 [22.4]	7.88 [200.2]	17.4 [7.9]
VJ	ECTFE [2]	2	150	6 [152.4]	0.75 [19.1]	3.62 [91.9]	4	0.75 [19.1]	4.75 [120.7]	7.3 [3.3]
VU	ECTFE [2]	3	150	7.5 [190.5]	0.94 [23.9]	5 [127]	4	0.75 [19.1]	6 [152.4]	12.1 [5.5]
VN	ECTFE [2]	4	150	9 [228.6]	0.94 [23.9]	6.19 [157.2]	8	0.75 [19.1]	7.5 [190.5]	17.4 [7.9]
ZJ	[3]	2	150	6 [152.4]	0.75 [19.1]	3.62 [91.9]	4	0.75 [19.1]	4.75 [120.7]	7.3 [3.3]
ZU	PVDF [3]	3	150	7.5 [190.5]	0.94 [23.9]	5 [127]	4	0.75 [19.1]	6 [152.4]	12.1 [5.5]

1) Combination of AISI 316 for required pressure resistance and AISI 316L/1.4435 for required chemical resistance (dual rated)

2) ECTFE coating on AISI 316L/1.4435. Avoid electrostatic charge at the plastic surfaces when using in hazardous areas.

3) Max.: 15 bar (225 psi), max.: –10 to +60 °C (+14 to +140 °F)

JIS flanges, connection dimensions as per JIS B 2220 BL, raised face RF

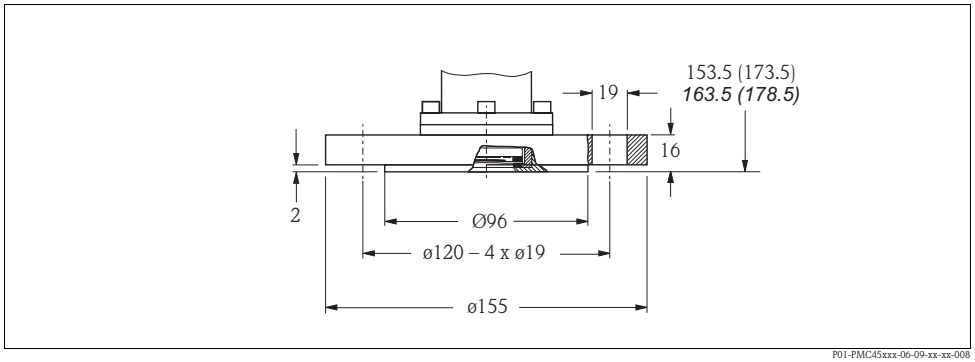

Process connection PMC45, JIS flange with raised face RF (flush-mounted diaphragm), material: AISI 316L/1.4435

	Flange					Bolt holes			
Version	**Nominal diameter**	**Nominal pressure**	**Diameter** **D** [mm]	**Thickness** **b** [mm]	**Raised face** **g** [mm]	**Quantity**	**Diameter** **g_2** [mm]	**Bolt circle** **k** [mm]	**Total weight** [kg]
RI	50 A	10 K	155	16	96	4	19	120	3.5
RJ	80 A	10 K	185	18	127	8	19	150	4.8

Universal process adapter

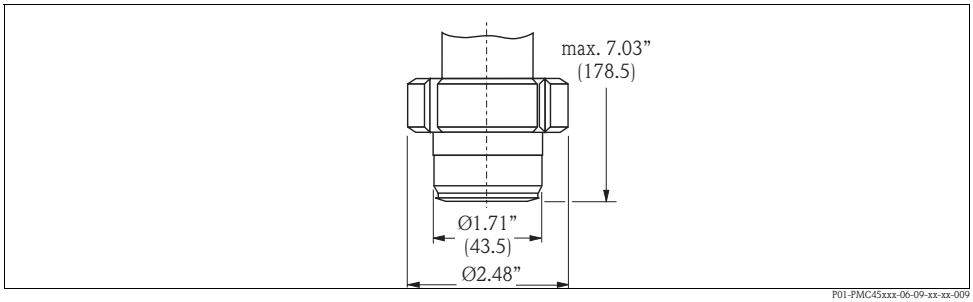

Process connection PMC45, version HA: universal process adapter, PN 10, material AISI 316L/1.4435, EHEDG
A silicone molded seal is enclosed with the process connection (viton on request).

Welding neck for universal process adapter

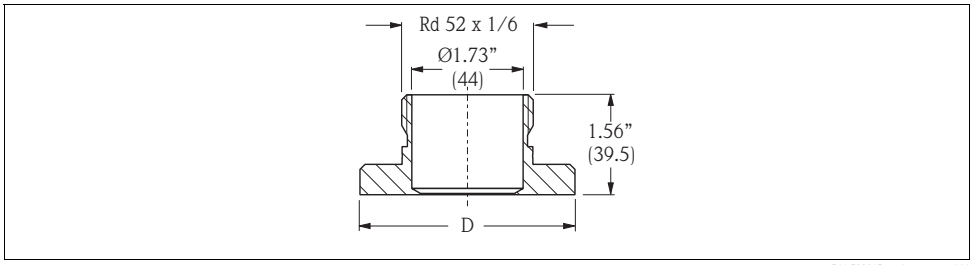

Diameter D	Material	Order number
2.56" (65 mm)	AISI 316L SS	214880-0002
2.56" (65 mm)	AISI 316L SS with inspection certificate EN 10204 3.1 material	52010174
3.35" (85 mm)	AISI 316L SS	52006262
3.35" (85 mm)	AISI 316L SS with inspection certificate EN 10204 3.1 material	52010173

Welding nozzle

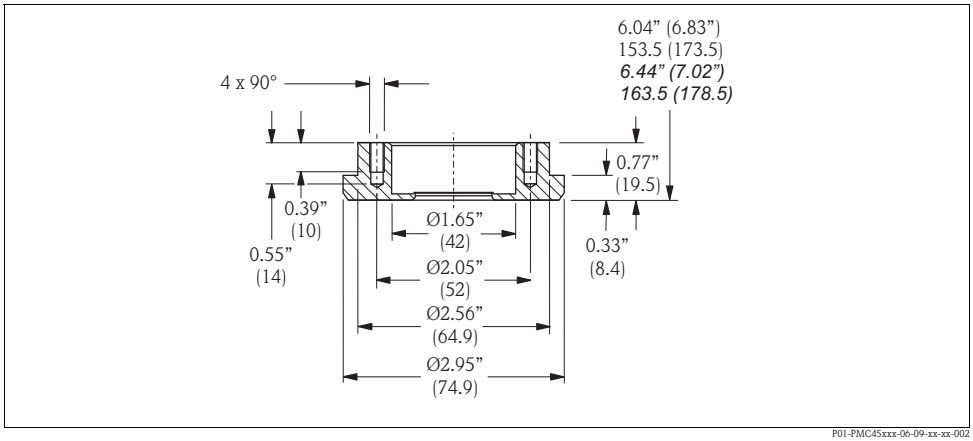

Version XU: welding nozzle 2.95" (75 mm), material AISI 316L SS

Process connections PMP41 (with metal measuring diaphragm)

Note!
- The installation heights in brackets apply to housings with a raised cover (for optional display). Installation heights written in italics apply to devices with an aluminum housing.

Thread, inner diaphragm

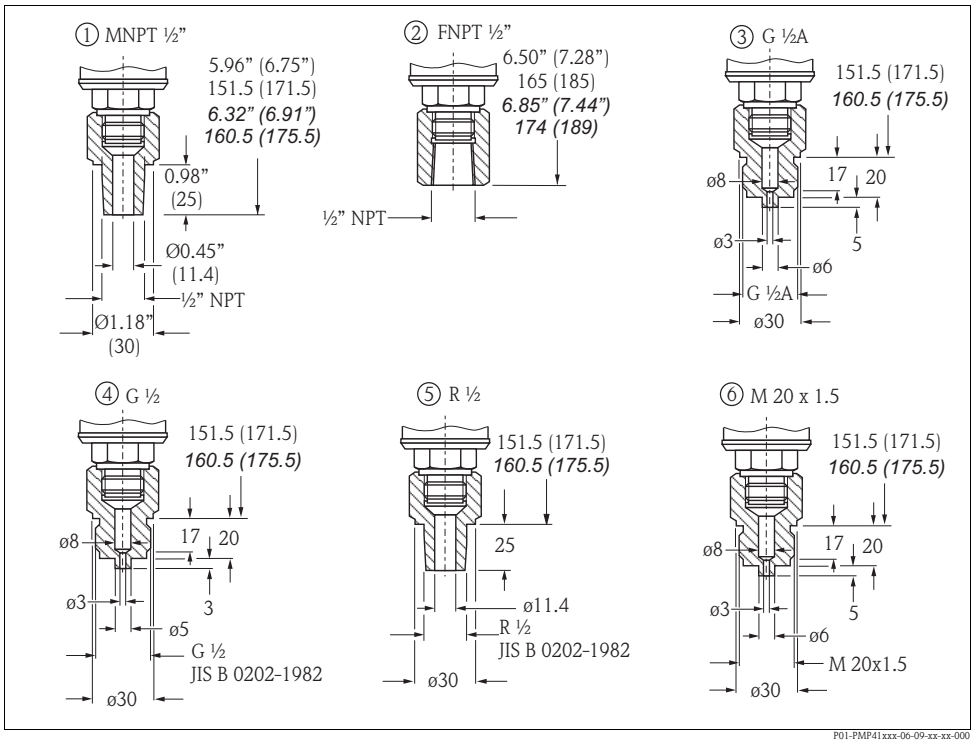

P01-PMP41xxx-06-09-xx-xx-000

Process connections PMP41, material: AISI 316L

1 Version 1M: thread ISO 228 G 1/2 A
2 Version 1G: thread ANSI MNPT 1/2, bore 11.4 mm
3 Version 1X: thread ANSI FNPT 1/2
4 Version 1S: thread JIS B0202 G 1/2 (male)
5 Version 1K: thread JIS B0203 R 1/2 (male), bore 11.4 mm
6 Version 1T: thread DIN 13 M 20x1.5

Note!
The 1M, 1G, 1X, 1S, 1K and 1T versions listed above are available as threaded or welded versions. Using feature 80 "Seal; Fill fluid" in the order code, select the version in conjunction with the seal and the filling oil.
→ See the following page also.

Threaded versions
Can be selected in conjunction with versions 1, H, P for feature 80 "Seal; Fill fluid" in the order code
(→ see Page 70)

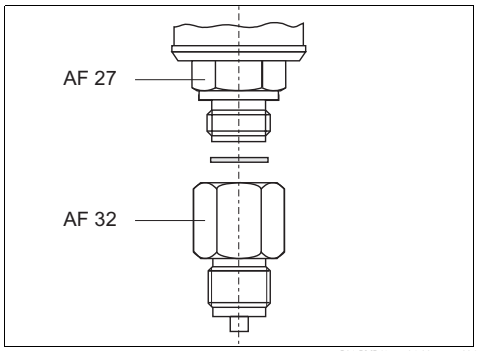

P01-PMP41xxx-06-09-xx-xx-004

Welded versions
Can be selected in conjunction with versions A, C, D for feature 80 "Seal; Fill fluid" in the order code
(→ see Page 70)

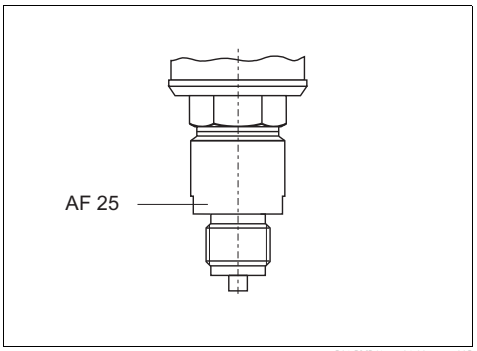

P01-PMP41xxx-06-09-xx-xx-005

Threaded connection, flush-mounted diaphragm

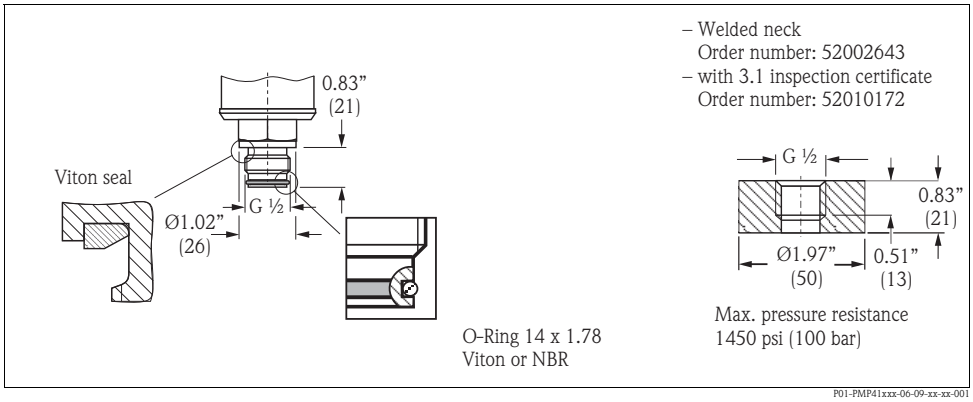

Process connection PMP41, version 1D: thread ISO 228 G 1/2 with O-ring for welding neck, material AISI 316L
This process connection can be selected with versions F or H for feature 80 "Seal; Fill fluid" (→ see Page 70).

Note!
Endress+Hauser offers a pressure sensor dummy for the welding necks with order numbers 52002643 and 52010172. Order number for pressure sensor dummy: 52005082

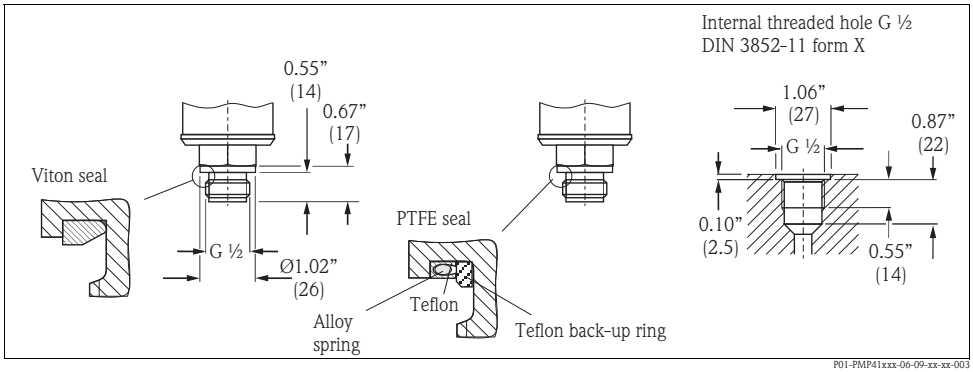

Process connection PMP41, version 1F: thread G 1/2 A; screw-in adapter to DIN 3852-11 form E with seal, material AISI 316L
This process connection can be selected with versions 1, 4 or P for feature 80 "Seal; Fill fluid" (→ see Page 70).

Process connections PMP45 (with metal measuring diaphragm)

Note!
- The installation heights in brackets apply to housings with a raised cover (for optional display). Installation heights written in italics apply to devices with an aluminum housing.

Threaded connection, flush-mounted diaphragm

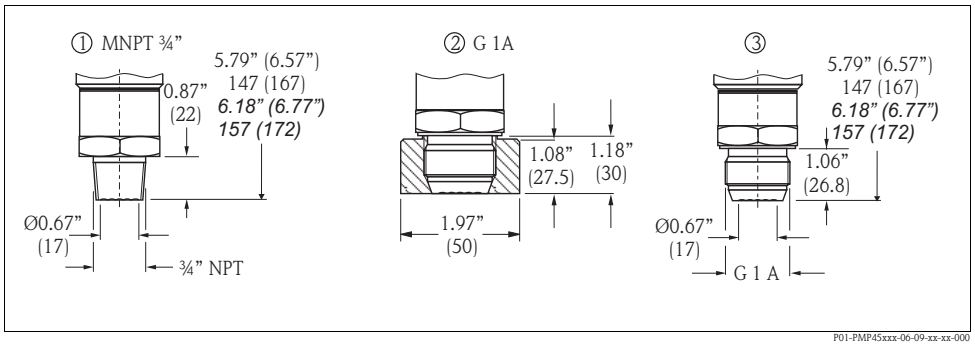

Process connections PMP45, flush-mounted threaded connection, material: AISI 316L

1 Version CD: thread ISO 228 G 1 A, seal metal taper AISI 316L
for welding neck see 2.
2 Welding neck for process connection thread ISO 228 G 1 A (version CD)
order number: 52005087; order number with 3.1 inspection certificate: 52010171
max. pressure resistance: 1450 psi (100 bar)
3 Version BB: thread ANSI 3/4 MNPT

Note!
Endress+Hauser offers a pressure sensor dummy for the welding necks with order numbers 52005087 and 52010171. Order number for pressure sensor dummy: 52005272

Clamp connections

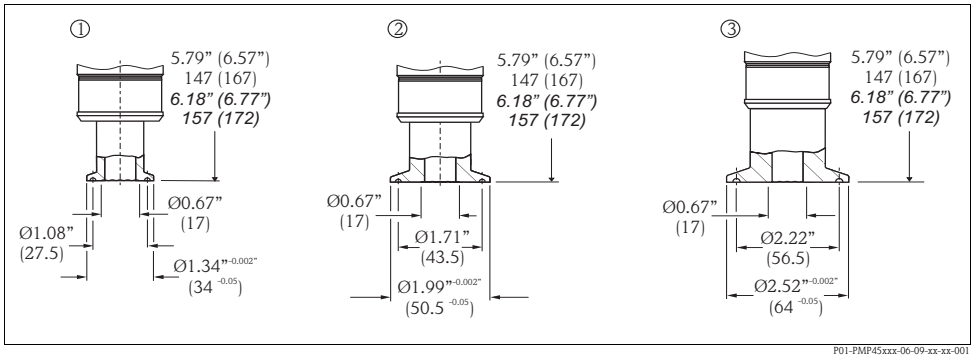

Process connections PMP45, clamp connections, material AISI 316L Surface roughness of the surfaces in contact with the medium $R_a \leq 0.8$ µm as standard. Lower surface roughness on request.

1 Version DA: Mini-clamp ISO 2852 DN 22 (3/4"), EHEDG, 3A, DIN 32676 DN 20
2 Version DB: Tri-Clamp ISO 2852 DN 25 – DN 38 (1" – 1 1/2"), EHEDG, 3A, DIN 32676 DN 25 – DN 40
3 Version DL: Tri-Clamp ISO 2852 DN 40 – DN 51 (2"), EHEDG, 3A, DIN 32676 DN 50

Hygienic connections

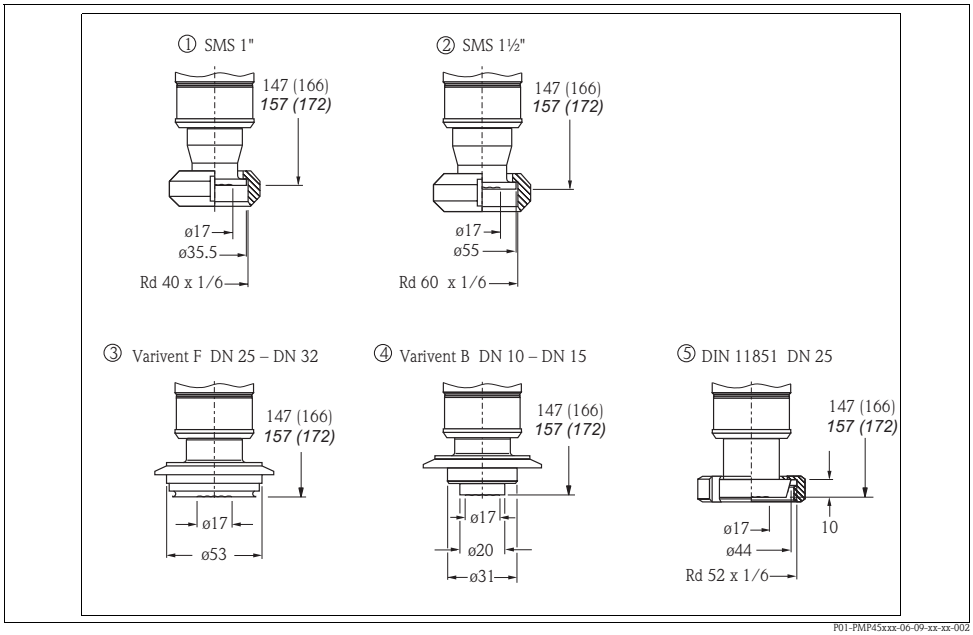

Process connections PMP45, hygienic connections, material AISI 316L

1 Version EB: SMS 1" PN 25, EHEDG, 3A
2 Version EG: SMS 1 1/2" PN 25, EHEDG, 3A
3 Version LB: Varivent type F for pipes DN 25 – DN 32 PN 40, EHEDG, 3A
4 Version LG: Varivent type B for pipes DN 10 – DN 15 PN 40, EHEDG, 3A
5 Version AB: DIN 11851 DN 25 PN 40, 3A

PMP45 tank adapter

Endress+Hauser offers King-Gage® style sanitary connections to allow easy retrofits of the PMP45 into existing tank spuds (refer to page 75, feature 70 "Process connections", codes MJ, MK and ML), EPDM O-ring included. Refer to page 84 for other PMP45 tank adapters.

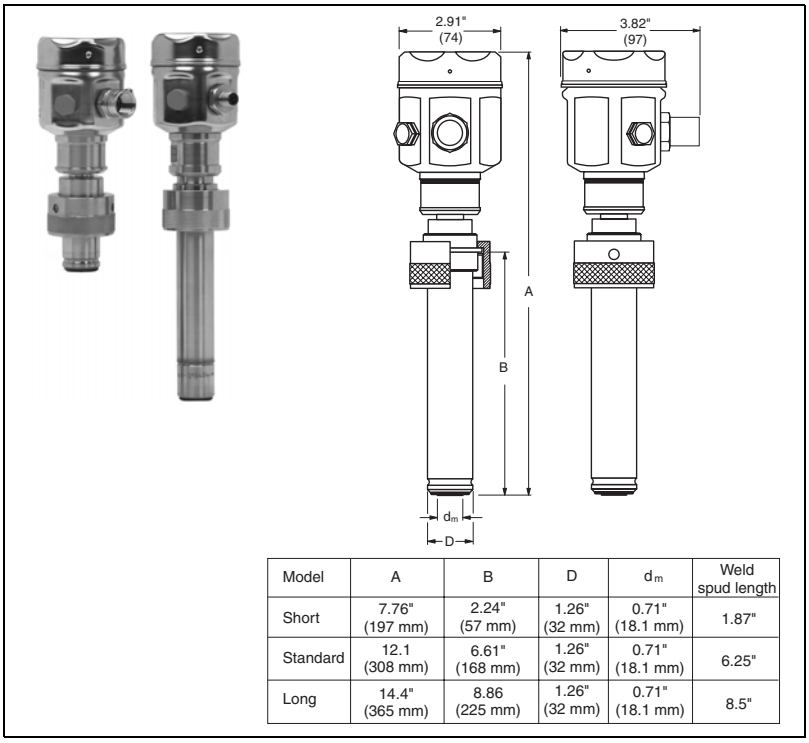

Model	A	B	D	d_m	Weld spud length
Short	7.76" (197 mm)	2.24" (57 mm)	1.26" (32 mm)	0.71" (18.1 mm)	1.87"
Standard	12.1 (308 mm)	6.61" (168 mm)	1.26" (32 mm)	0.71" (18.1 mm)	6.25"
Long	14.4" (365 mm)	8.86 (225 mm)	1.26" (32 mm)	0.71" (18.1 mm)	8.5"

Process connections PMP46 (with metal measuring diaphragm)

Note!

- The following tables contain information on the temperature coefficients "T_K Process" and "T_K Ambient". The values given are typical values. These temperature coefficients apply to silicone oil and diaphragm material AISI 316L/1.4435. For other filling oils, these temperature coefficients must be multiplied by the T_K correction factor of the corresponding filling oil. For the T_K correction factors, see Page 60, "Diaphragm seal filling oils" section.
- With regard to the temperature coefficient "T_K Ambient", devices with temperature isolators behave like devices with the same process connection with 1 m capillary.
- In addition, the temperature coefficient "T_K Ambient" is listed in relation to the capillary length for the diaphragm seal versions which can be supplied with capillaries as standard. This information can be found on Page 61 ff, "Influence of the temperature on the zero point" section.
- The tables and drawings always give the maximum installation height for the device version, i.e. this installation height applies to a device with an aluminum housing and a raised cover and without any capillaries. The installation heights for devices with a stainless steel housing and a raised cover are approx. 5 mm less.
- The tables always give the maximum total weight for the device version, i.e. this total weight applies to a device with an aluminum housing and a raised cover. Devices with a stainless steel housing weigh approx. 300 g less.
- The following drawings are schematic diagrams. This means that the dimensions of a diaphragm seal supplied can deviate from the dimensions indicated in this document.

Tri-Clamp ISO 2852

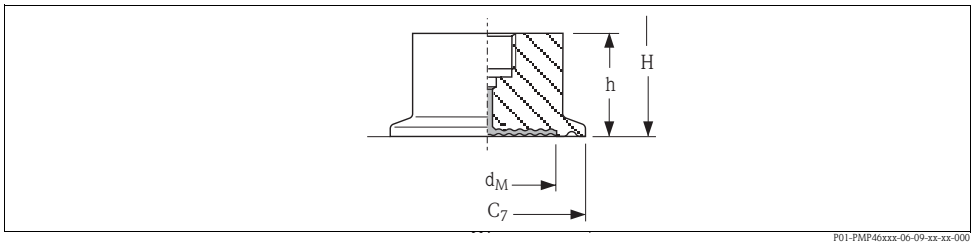

Process connection PMP46, material: AISI 316L, EHEDG, 3A, surface roughness of the surfaces in contact with the medium $R_a \leq 0.8$ µm as standard. Lower surface roughness on request.

Version	Nominal diameter ISO 2852	Nominal diameter DIN 32676	Nominal diameter	Diameter C_7	Max. diaphragm diameter d_M	Height h	T_K Ambient	T_K Process	Max. installation height H	Max. total weight
			inches	in (mm)	in (mm)	in (mm)	[mbar/10 K]		in (mm)	lbs (kg)
DF	DN 25	DN 25	1	2.0 (50.5)	0.94 (24)	1.18 (30)	+15.33	+2.85	8.94 (227)	3.5 (1.6)
DG[1]	DN 38	DN 40	1 1/2	2.0 (50.5)	1.34 (34)	1.18 (30)	+8.14	+1.91	8.94 (227)	3.5 (1.6)
DL[1]	DN 51	DN 50	2	2.5 (64)	1.93 (48)	1.18 (30)	+3.45	+1.28	9.25 (235)	4.2 (1.9)
DU	DN 76.1	–	3	3.5 (91)	2.87 (73)	1.18 (30)	+0.3	+0.18	9.25 (235)	5.3 (2.4)

1) Diaphragm seal versions compliant with ASME-BPE for use in biochemical processes, wetted surfaces $R_a \leq 0.4$ µm (15.75 µin; 240 grit), electropolished; to be ordered using feature 60 "Additional option", version "P" in the order code

Clamp pipe diaphragm seal (RDM)

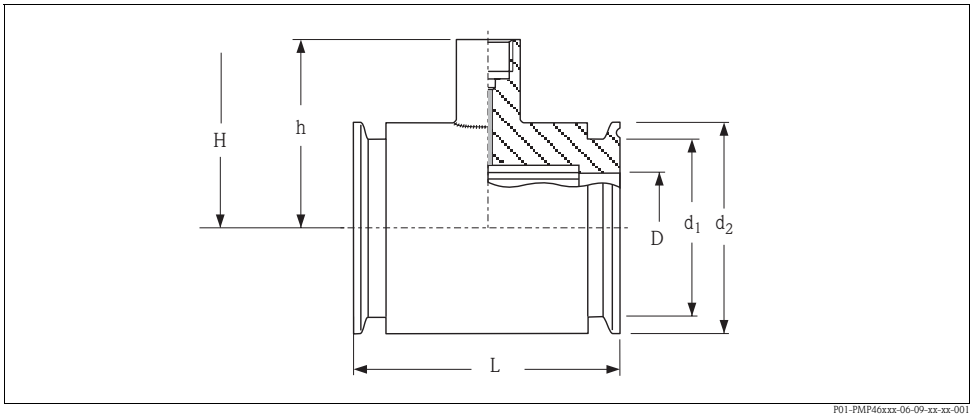

Process connection PMP46, EHEDG, 3A, material AISI 316L, surface roughness of the surfaces in contact with the medium $R_a \leq 0.8$ µm as standard. Lower surface roughness on request.

Version	Nominal diameter ISO 2852	Diameter D in (mm)	Diameter d_1 in (mm)	Diameter d_2 in (mm)	Height h in (mm)	Face-to-face length L in (mm)	T_K Ambient [mbar/10 K]	T_K Process [mbar/10 K]	Max. installation height H in (mm)	Max. total weight lbs (kg)
SA *	DN 10	0.41 (10.5)	0.71 (18)	0.98 (25)	2.36 (60)	5.51 (140)	+5.4	+3.1	10.0 (255)	6.4 (2.9)
SB	DN 25	0.89 (22.5)	1.71 (43.5)	2.0 (50.5)	2.64 (67)	4.96 (126)	+7.75	+4.49	10.3 (262)	6.4 (2.9)
SC	DN 16	0.62 (15.7)	0.75 (19)	0.98 (25)	2.36 (60)	4.72 (120)	+5.4	+16.9	10.0 (255)	6.4 (2.9)
SG [1]	DN 38	1.40 (35.5)	1.71 (43.5)	2.0 (50.5)	2.64 (67)	4.96 (126)	+5.17	+3.46	10.3 (262)	4.9 (2.2)
SL [1]	DN 51	1.91 (48.6)	2.22 (56.5)	2.52 (64)	3.11 (79)	3.94 (100)	+3.56	+2.69	10.8 (274)	6.4 (2.9)

1) Including 3.1 and pressure test as per Pressure Equipment Directive, Category II

* NOTE: Version SA 3/4" (DN10) is a mini-clamp and not compatible with Tri-Clamp

SMS nozzle with coupling nut

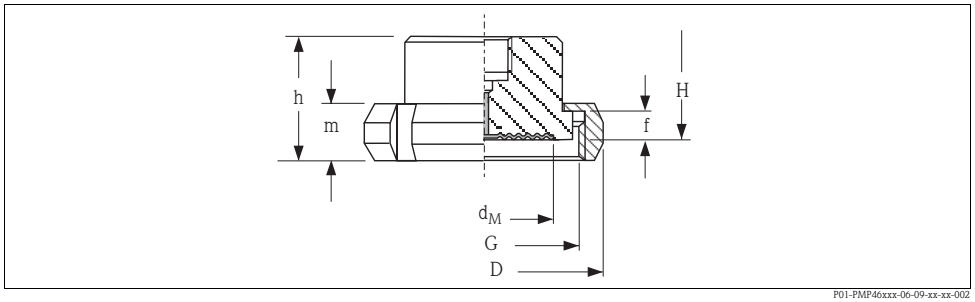

Process connection PMP46, material AISI 316L, 3A, surface roughness of the surfaces in contact with the medium $R_a \leq$ 0.8 µm as standard. Lower surface roughness on request.

Version	Nominal diameter	Nominal pressure	Diameter	Adapter height	Thread	Height	Height	Max. diaphragm diameter	T_K Ambient	T_K Process	Max. installation height	Max. total weight
			D	f	G	m	h	d_M			H	
	[inch]	[bar]	[mm]	[mm]		[mm]	[mm]	[mm]	[mbar/10 K]		[mm]	[kg]
EG	1 1/2	PN 25	74	4	Rd 60 – 1/6	25	57	36	+8.18	+2.59	252	1.8
EL	2	PN 25	84	4	Rd 70 – 1/6	26	62	48	+5.4	+1.76	257	2.2

APV-RJT nozzle with coupling nut

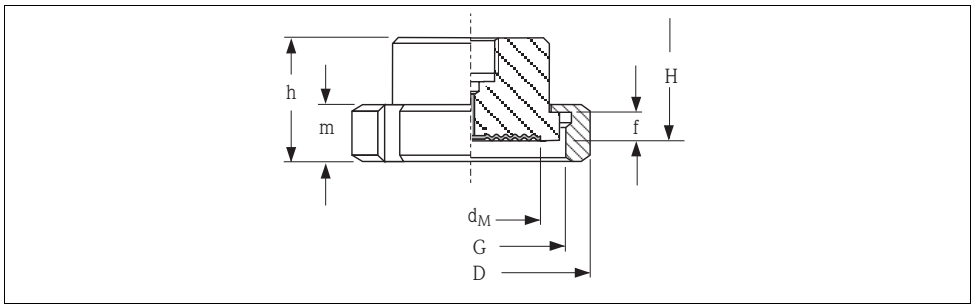

Process connection PMP46, material AISI 316L, surface roughness of the surfaces in contact with the medium $R_a \leq$ 0.8 µm as standard. Lower surface roughness on request.

Version	Nominal diameter	Nominal pressure	Diameter	Adapter height	Thread	Height	Height	Max. diaphragm diameter	T_K Ambient	T_K Process	Max. installation height	Max. total weight
		PN	D	f	G	m	h	d_M			H	
	[inch]	[bar]	[mm]	[mm]		[mm]	[mm]	[mm]	[mbar/10 K]		[mm]	[kg]
FG	1 1/2	PN 40	72	6.4	2 5/16 – 1/8"	21	60	28	+8.18	+2.59	255	2.0
FL	2	PN 40	86	6.4	2 7/8 – 1/8"	22	61	38	+5.4	+1.76	256	2.2

APV-ISS nozzles with coupling nut

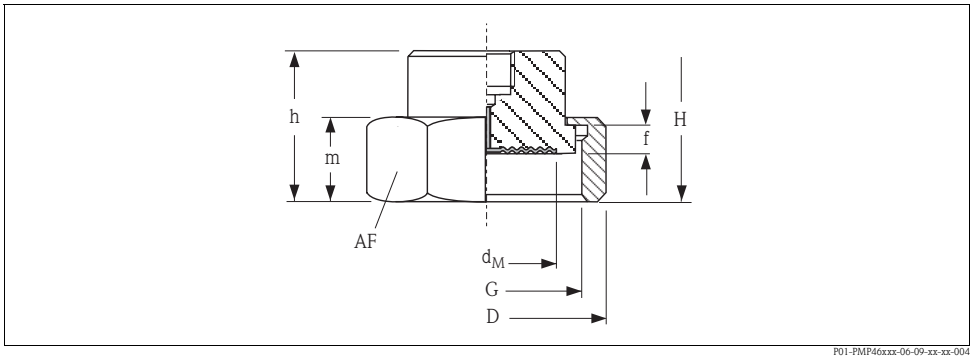

Process connection PMP46, material AISI 316L, 3A, surface roughness of the surfaces in contact with the medium $R_a \leq 0.8$ µm as standard. Lower surface roughness on request.

Version	Nominal diameter	Nominal pressure	Diameter D	Adapter height f	Thread G	Height m	Across flats AF	Height h	Max. diaphragm diameter d_M	T_K Ambient	T_K Process	Max. installation height H	Max. total weight
	[inch]	[bar]	[mm]	[mm]		[mm]		[mm]	[mm]	[mbar/10 K]		[mm]	[kg]
GG	1 1/2	PN 40	72	4	2" – 1/8"	30	62	70	34	+8.14	+2.59	265	1.9
GL	2	PN 40	89	4	2 1/2" – 1/8"	30	77	70	45	+5.4	+1.76	265	2.2

DRD DN50 (65 mm)

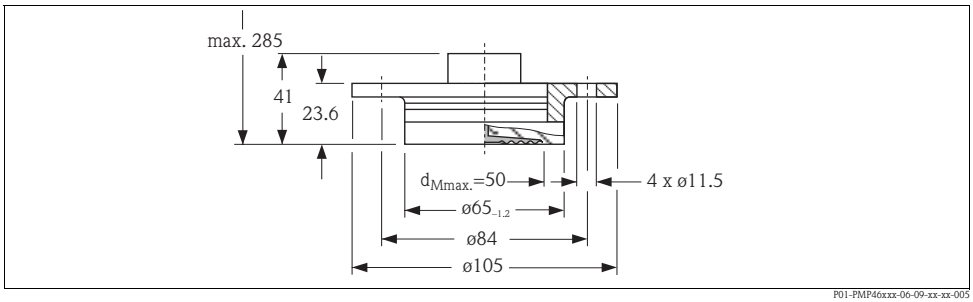

Process connection PMP46, version KL: material AISI 316L, 3A, surface roughness of the surfaces in contact with the medium $R_a \leq 0.8$ µm as standard. Lower surface roughness on request.

Version	Nominal pressure	T_K Ambient	T_K Process	Max. total weight
		[mbar/10 K]		[kg]
KL	PN 25	+2.26	+0.89	2.0

Varivent

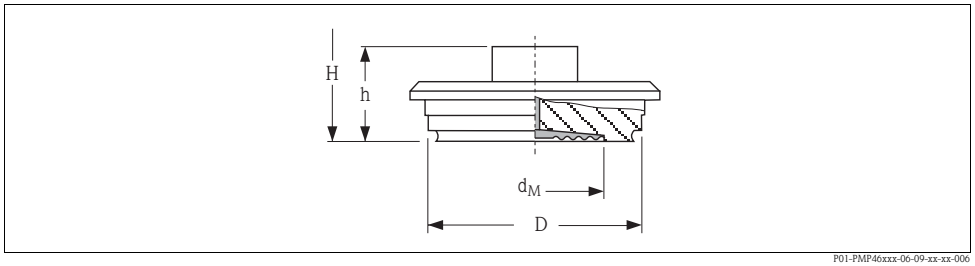

Process connection PMP46, material AISI 316, 3A, surface roughness of the surfaces in contact with the medium $R_a \leq 0.8$ µm as standard. Lower surface roughness on request.

Version	Description	Nominal pressure	Diameter D	Height h	Max. diaphragm diameter d_M	T_K Ambient	T_K Process	Max. installation height H	Max. total weight
		[bar]	[mm]	[mm]	[mm]	[mbar/10 K]		[mm]	[kg]
LB	Type F for pipes DN 25 – DN 32	PN 40	50	55	30	+7.75	+4.49	250	1.8
LL [1]	Type N for pipes DN 40 – DN 162	PN 40	68	55	50	+2.26	+0.89	250	2.1

1) Diaphragm seal versions compliant with ASME-BPE for use in biochemical processes, wetted surfaces $R_a \leq 0.4$ µm (15.75 µin; 240 grit), electropolished; to be ordered using feature 60 "Additional option", version "P" in the order code

Taper adapter with coupling nut, DIN 11851 (dairy fitting)

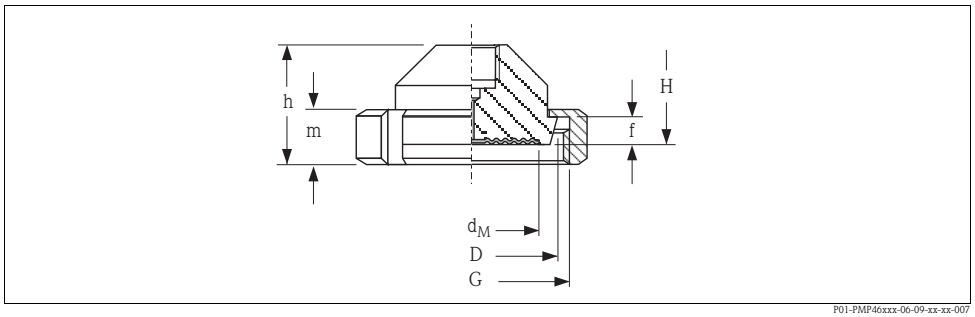

Process connection PMP46, material AISI 316L, 3A, surface roughness of the surfaces in contact with the medium $R_a \leq 0.8$ µm as standard. Lower surface roughness on request.

		Taper adapter			Slotted nut			Diaphragm seal				
Version	Nominal diameter	Nominal pressure	Diameter D	Adapter height f	Thread G	Height m	Height h	Max. diaphragm diameter d_M	T_K Ambient	T_K Process	Max. installation height H	Max. total weight
	[mm]	[bar]	[mm]	[mm]		[mm]	[mm]	[mm]	[mbar/10 K]		[mm]	[kg]
AG	DN 32	PN 40	50	10	Rd 58 x 1/6	21	54	32	+8.14	+2.59	249	1.9
AH	DN 40	PN 40	56	10	Rd 65 x 1/6	21	53	38	+5.4	+1.76	248	2.0
AL	DN 50	PN 25	68.5	11	Rd 78 x 1/6	22	48	46	+2.21	+0.88	243	2.3

Pipe diaphragm seal, threaded adapter DIN11851 (dairy fitting)

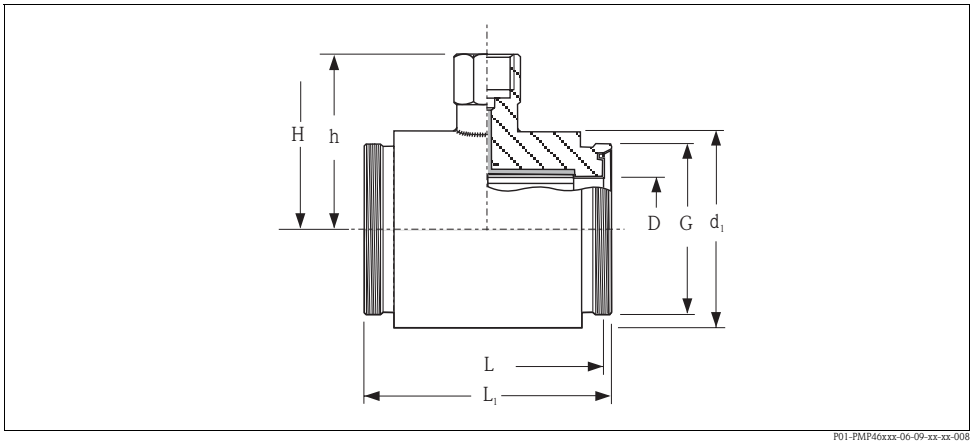

Process connection PMP46, material AISI 316L/1.4435, 3A, surface roughness of the surfaces in contact with the medium $R_a \leq 0.8$ µm as standard. Lower surface roughness on request.

Version	Nominal diameter	Nominal pressure	Diameter D	Diameter d_1	Thread G	Face-to-face length L	Total length L_1	Height h	T_K Ambient	T_K Process	Max. installation height H	Max. total weight
	[mm]	[bar]	[mm]	[mm]		[mm]	[mm]	[mm]	[mbar/10 K]		[mm]	[kg]
PB	DN 25	PN 40	26.2	58	Rd 52 x 1/6	126	140	76	+16.03	+5.17	271	3.0
PH	DN 40	PN 40	38	78	Rd 65 x 1/6	126	140	86	+5.4	+1.76	281	4.4
PL	DN 50	PN 25	50.7	88	Rd 78 x 1/6	100	114	91	+2.21	+0.88	286	3.8

Process connections PMP48 (with metal measuring diaphragm)

Note!

- The following tables contain information on the temperature coefficients "T_K Process" and "T_K Ambient". The values given are typical values. These temperature coefficients apply to silicone oil and diaphragm material AISI 316L/1.4435. For other filling oils, these temperature coefficients must be multiplied by the T_K correction factor of the corresponding filling oil. For the T_K correction factors, see Page 60, "Diaphragm seal filling oils" section.
- The following drawings are schematic diagrams. This means that the dimensions of a diaphragm seal supplied can deviate from the dimensions indicated in this document.
- The tables and drawings always give the maximum installation height for the device version, i.e. this installation height applies to a device with an aluminum housing and a raised cover and without any capillaries. The installation heights for devices with a stainless steel housing and a raised cover are approx. 0.2" (5 mm) less.
- The tables always give the maximum total weight for the device version, i.e. this total weight applies to a device with an aluminum housing and a raised cover. Devices with a stainless steel housing weigh approx. 0.7 lb (300 g) less.

Threaded connection, flush-mounted diaphragm

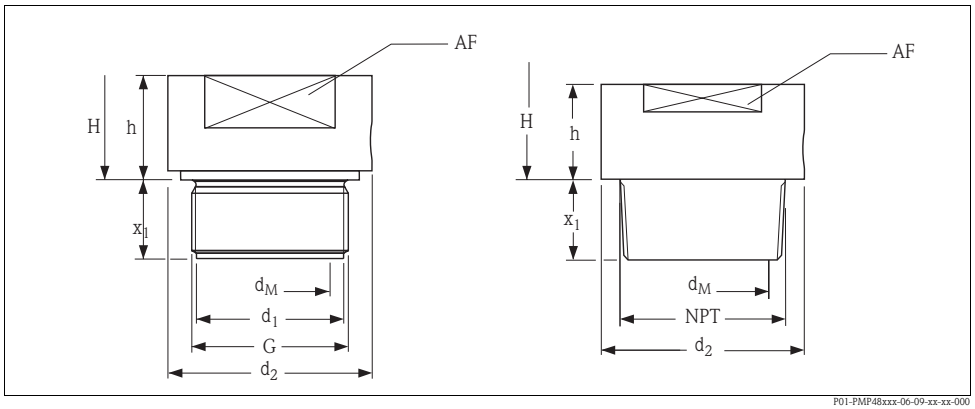

Process connections PMP48, left: thread ISO 228, right: thread ANSI, material AISI 316L

Version	Thread	Nominal pressure PN	Diameter d_1	Diameter d_2	Screw-in length x_1	Across flats SW/AF	Height h	Max. diaphragm diameter d_M	T_K Ambient [mbar/10 K]	T_K Process [mbar/10 K]	Max. installation height H	Max. total weight
AF	G 1 A	400 bar	30 mm	39 mm	21 mm	32 mm	19 mm	30 mm	+16.03	+5.17	199 mm	1.6 kg
AG[1]	G 1 1/2 A	400 bar	43 mm	55 mm	30 mm	41 mm	20 mm	42 mm	+5.4	+1.76	200 mm	2.1 kg
AR	G 2	400 bar	56 mm	68 mm	30 mm	60 mm	20 mm	50 mm	+1.76	+0.56	200 mm	3.1 kg
BF	1 MNPT	6000 psi	–	1.89"	1.10"	41	1.46"	0.94"	+15.66	+4.21	8.54"	4 lbs
BG	1 1/2 MNPT	6000 psi	–	1.97"	1.18"	41	0.79"	1.42"	+8.14	+2.59	7.87"	4.6 lbs
BR	2 MNPT	6000 psi	–	3.07"	1.18"	65	1.38"	1.50"	+5.4	+2.59	9.25"	6.6 lbs

1) Endress+Hauser also offers welding necks for this process connection. → See Page 34.

Thread ISO 228 G 1/2 A and ANSI 1/2 MNPT, seperator

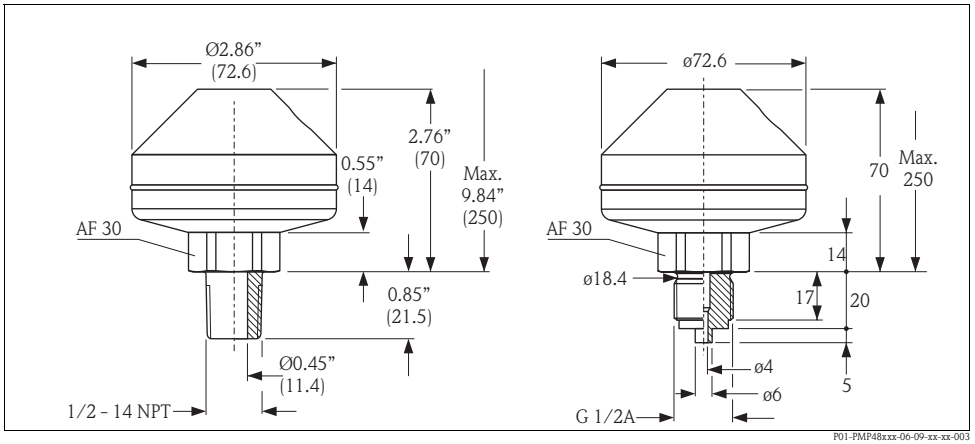

Process connection PMP48, versions "CA" and "DA", welded, material AISI 316L

Version	Description	Nominal pressure	T_K Ambient	T_K Process	Diaphragm seal weight
			[mbar/10 K]		
CA	ISO 228 G 1/2 A	PN 160	+0.9	+0.3	1.43 kg
DA	ANSI 1/2 MNPT	2320 psi	+0.9	+0.3	3.2 lbs

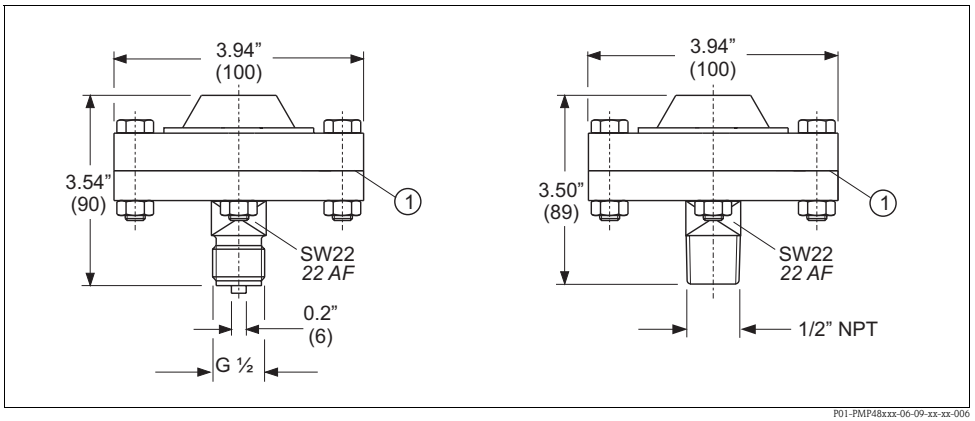

Process connection PMP48, left: version "CA" with threaded connection ISO 228 G 1/2 B, right: version "DA" with threaded connection ANSI 1/2 MNPT

1 PTFE seal as standard max. 260 °C/500 °F (higher temperatures on request)

Version	Measuring range	Description	Nominal pressure	T_K Process [mbar/10 K]	Diaphragm seal weight
CA	≤ 40 bar	ISO 228 G 1/2 B	PN 40	+0.75	1.43 kg
DA	≤ 580 psi	ANSI 1/2 MNPT	580 psi	+0.55	3.2 lbs

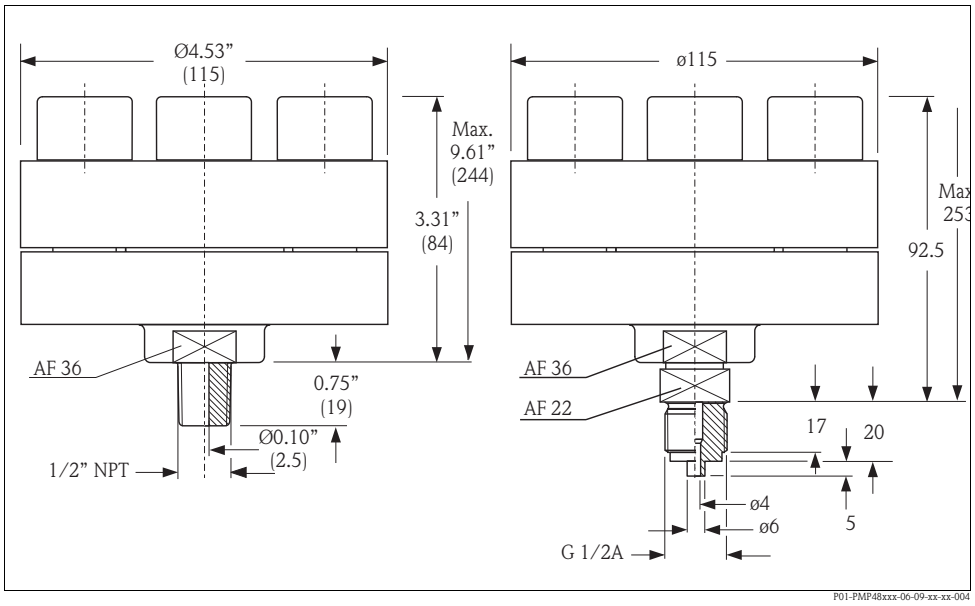

Process connection PMP48, versions "CA" and "DA", screwed, with integrated sealing lip, material AISI 316L

Version	Measuring range	Description	Nominal pressure	T_K Ambient	T_K Process	Diaphragm seal weight
				[mbar/10 K]		
CA	> 40 bar	ISO 228 G 1/2 A	PN 400	+3.45	+1.28	4.75 kg
DA	> 580 psi	ANSI 1/2 MNPT	6000 psi	+3.45	+1.28	10.5 lbs

Note!
With the use of high temperature oils the design can deviate strongly.
For further information please contact your local Endress+Hauser Sales Center.

EN/DIN flanges, connection dimensions as per EN 1092-1/DIN 2527 and DIN 2501-1

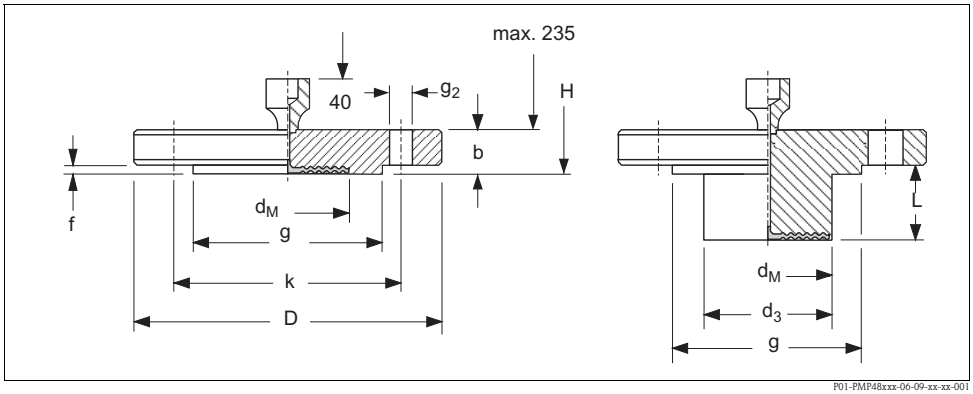

Process connection PMP48, EN/DIN flange with flush-mounted diaphragm, material AISI 316L

H max. installation height = 235 mm + flange thickness b (→ see Table)

	Flanges							Bolt holes			Diaphragm seal			
Version	**Nominal diameter**	**Nominal pressure**	**Shape** [1]	**Diameter**	**Thickness**	**Raised face**		**Quantity**	**Diameter**	**Bolt circle**	**Max. diaphragm diameter**	**T_K Ambient**	**T_K Process**	**Max. total weight**
				D	**b**	**g**	**f**		**g_2**	**k**	**d_M**			
				[mm]	[mm]	[mm]	[mm]		[mm]	[mm]	[mm]	[mbar/10 K]		[kg]
EB	DN 25	PN 10-40	B1 (D)	115	18	66	3	4	14	85	32	+16.03	+5.17	2.1
EC	DN 25	PN 63-160	E	140	24	68	2	4	18	100	28	+16.03	+5.17	2.5
ED	DN 25	PN 250	E	150	28	68	2	4	22	105	28	+16.03	+5.17	3.7
EF	DN 25	PN 400	E	180	38	68	2	4	26	130	28	+16.03	+5.17	7.0
EK	DN 50	PN 10-40	B1 (D)	165	20	102	3	4	18	125	59	+2.21	+1.15	3.0
EM	DN 50	PN 63	B2 (E)	180	26	102	3	4	22	135	59	+2.21	+1.15	4.6
EN	DN 50	PN 100-160	E	195	30	102	3	4	26	145	59	+2.21	+1.15	6.2
EP	DN 50	PN 250	E	200	38	102	3	8	26	150	59	+2.21	+1.15	7.7
ER	DN 50	PN 400	E	235	52	102	3	8	30	180	59	+2.21	+1.15	14.7
EU	DN 80	PN 10-40	B1 (D)	200	24	138	3.5	8	18	160	89	+0.19	+0.11	5.3
FK [2]	DN 50	PN 10-40	B1 (D)	165	20	102	3	4	18	125	47	+3.45	+1.67	[2]
GK [2]														
JK [2]														
FU [2]	DN 80	PN 10-40	B1 (D)	200	24	138	3.5	4	18	160	72	+0.19	+0.7	[2]
GU [2]														
JU [2]														

1) Designation as per DIN 2527 in brackets

2) Alternatively with 50 mm, 100 mm and 200 mm extended diaphragm seal, for extended diaphragm seal diameter and weight, see the following table

EN/DIN flanges, connection dimensions as per EN 1092-1/DIN 2527 and DIN 2501 (additional technical data)

Version	Nominal diameter	Nominal pressure	Extended diaphragm seal length L [mm]	Extended diaphragm seal diameter d_3 [mm]	Max. total weight [kg]
FK	DN 50	PN 10-40	50	48.3	4.4
GK	DN 50	PN 10-40	100	48.3	5.0
JK	DN 50	PN 10-40	200	48.3	5.6
FU	DN 80	PN 10-40	50	76	7.4
GU	DN 80	PN 10-40	100	76	7.9
JU	DN 80	PN 10-40	200	76	9.0

JIS flanges, connection dimensions as per JIS B 2220 BL, raised face RF

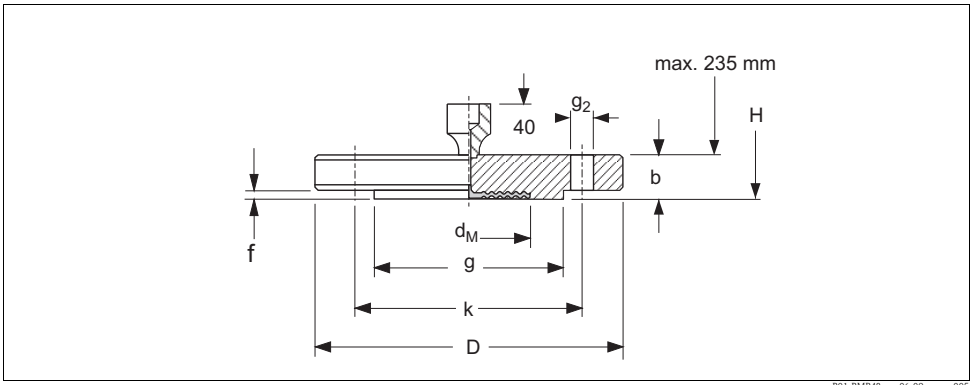

Process connection PMP48, JIS flange, material AISI 316L

H Max. installation height = 235 mm + flange thickness b (→ see Table)

	Flange						Bolt holes			Diaphragm seal			
Version	Nominal diameter	Nominal pressure	Diameter D [mm]	Thickness b [mm]	Raised face diameter g [mm]	Raised face height f [mm]	Quantity	Diameter g_2 [mm]	Bolt circle k [mm]	Max. diaphragm diameter d_M [mm]	T_K Ambient [mbar/10 K]	T_K Process [mbar/10 K]	Max. total weight [kg]
RB	25 A	10 K	125	14	67	1	4	19	90	32	+16.03	+5.17	2.7
RJ	50 A	10 K	155	16	96	2	4	19	120	59	+2.21	+1.15	2.5
RU	80 A	10 K	185	18	127	2	8	19	150	89	+0.19	+0.11	5.5

ANSI flanges B 16.5 RF

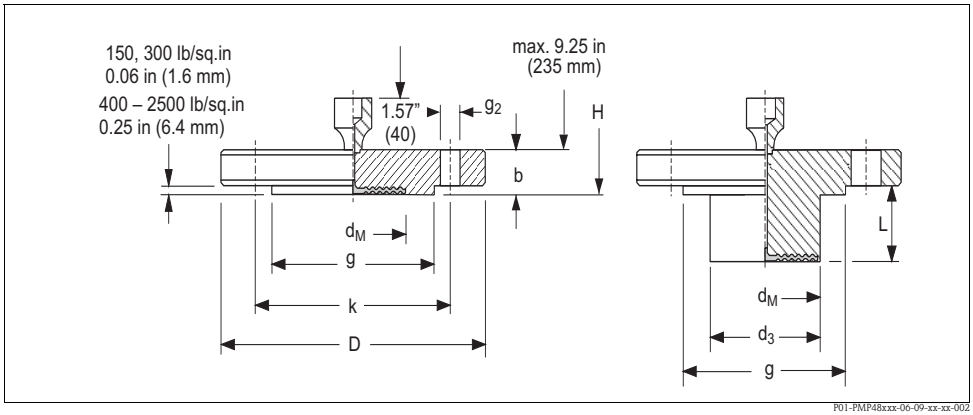

Process connection PMP48, ANSI flange B 16.5 RF with and without extended diaphragm seal

H Max. installation height = 235 mm + flange thickness b (→ see Table)

	Flange						Bolt holes			Diaphragm seal			
Version	**Material**[1]	**Nominal diameter**	**Class**	**Diameter** **D**	**Thickness** **b**	**Raised face** **g**	**Quantity**	**Diameter** **g_2**	**Bolt circle** **k**	**Max. diaphragm diameter**	**T_K Ambient**	**T_K Process**	**Max. total weight**
		[in]	[lb./sq.in]	in [mm]	in [mm]	in [mm]		in [mm]	in [mm]	in [mm]	[mbar/10 K]		lbs (kg)
KB	AISI 316/316L[1]	1	150	4.25 [108]	0.56 [14.2]	2 [50.8]	4	0.62 [15.7]	3.12 [79.2]	1.26 [32]	+16.03	+5.17	5.3 (2.4)
KC	AISI 316/316L[1]	1	300	4.88 [124]	0.69 [17.5]	2 [50.8]	4	0.75 [19.1]	3.5 [88.9]	1.26 [32]	+16.03	+5.17	5.5 (2.5)
KD	AISI 316/316L[1]	1	400/600	4.88 [124]	0.69 [17.5]	2 [50.8]	4	0.75 [19.1]	3.5 [88.9]	1.26 [32]	+16.03	+5.17	5.7 (2.6)
KE	AISI 316/316L[1]	1	900/1500	5.88 [149.4]	1.12 [28.4]	2 [50.8]	4	1 [25.4]	4 [101.6]	1.26 [32]	+16.03	+5.17	11 (5.0)
KF	AISI 316/316L[1]	1	2500	6.25 [158.8]	1.38 [35.1]	2 [50.8]	4	1 [25.4]	4.25 [108]	1.26 [32]	+16.03	+5.17	13 (5.8)
KJ	AISI 316/316L[1]	2	150	6 [152.4]	0.75 [19.1]	3.62 [91.9]	4	0.75 [19.1]	4.75 [120.7]	2.32 [59]	+2.21	+1.15	7.5 (3.4)
KK	AISI 316/316L[1]	2	300	6.5 [165.1]	0.88 [22.4]	3.62 [91.9]	8	0.75 [19.1]	5 [127]	2.32 [59]	+2.21	+1.15	10.1 (4.6)
KL	AISI 316/316L[1]	2	400/600	6.5 [165.1]	1 [25.4]	3.62 [91.9]	8	0.75 [19.1]	5 [127]	2.32 [59]	+2.21	+1.15	11.7 (5.3)
KM	AISI 316/316L[1]	2	900/1500	8.5 [215.9]	1.5 [38.1]	3.62 [91.9]	8	1 25.4	6.5 [165.1]	2.32 [59]	+2.21	+1.15	25 (11.5)
KN	AISI 316/316L[1]	2	2500	9.25 [235]	2 [50.8]	3.62 [91.9]	8	1.12 [28.4]	6.75 [171.5]	2.32 [59]	+2.21	+1.15	37 (17.0)
KU	AISI 316/316L[1]	3	150	7.5 [190.5]	0.94 [23.9]	5 [127]	4	0.75 [19.1]	6 [152.4]	3.50 [89]	+0.19	+0.11	14 (6.3)
KV	AISI 316/316L[1]	3	300	8.25 [209.5]	1.12 [28.4]	5 [127]	8	0.75 [19.1]	6 [152.4]	3.50 [89]	+0.19	+0.11	18 (8.2)
KW	AISI 316/316L[1]	4	150	9 [228.6]	0.94 [23.9]	6.19 [157.2]	8	0.75 [19.1]	7.5 [190.5]	3.50 [89]	+0.19	+0.11	18.5 (8.4)
KX	AISI 316/316L[1]	4	300	10 [254]	1.25 [31.8]	6.19 [157.2]	8	0.88 [22.4]	7.88 [200.2]	3.50 [89]	+0.19	+0.11	28 (12.9)

	Flange						Bolt holes			Diaphragm seal			
Version	**Material**	**Nominal diameter**	**Class**	**Diameter D**	**Thickness b**	**Raised face g**	**Quantity**	**Diameter g_2**	**Bolt circle k**	**Max. diaphragm diameter**	**T_K Ambient**	**T_K Process**	**Total weight**
		[in]	[lb./sq.in]	in [mm]	in [mm]	in [mm]		in [mm]	in [mm]	in [mm]	[mbar/10 K]		lbs (kg)
LJ[2]	AISI 316/ 316L [1]	2	150	6 [152.4]	0.75 [19.1]	3.62 [91.9]	4	0.75 [19.1]	4.75 [120.7]	1.85 [47]	+3.45	+1.67	[2]
MJ[2]													
NJ[2]													
LU[2]	AISI 316/ 316L[1]	3	150	7.5 [190.5]	0.94 [23.9]	5 [127]	4	0.75 [19.1]	6 [152.4]	2.83 [72]	+0.19	+0.7	[2]
MU[2]													
NU[2]													
LW[2]	AISI 316/ 316L[1]	4	150	9 [228.6]	0.94 [23.9]	6.19 [157.2]	8	0.75 [19.1]	7.5 [190.5]	3.50 [89]	+0.19	+0.11	[2]
MW[2]													
NW[2]													

1) Combination of AISI 316 for required pressure resistance and AISI 316L for required chemical resistance (dual rated).

2) Alternatively with 2", 4" and 6" extended diaphragm seal, for extended diaphragm seal diameter and weight, see the following table

ANSI flanges B 16.5 RF (additional technical data)

Version	**Nominal diameter**	**Class**	**Extended diaphragm seal length L**	**Extended diaphragm seal diameter d_3**	**Max. total weight**
	[in]	[lb./sq.in]	in (mm)	in (mm)	lbs (kg)
LJ	2	150	2 (50.8)	1.9 (48.3)	9 (4.2)
MJ			4 (101.6)		10 (4.6)
NJ			6 (152.4)		11 (5.1)
LU	3	150	2 (50.8)	2.99 (75.9)	16 (7.2)
MU			4 (101.6)		17 (7.8)
NU			6 (152.4)		18 (8.3)
LW	4	150	2 (50.8)	3.7 (94)	22 (9.8)
MW			4 (101.6)		24 (11.1)
NW			6 (152.4)		27 (12.4)

Weight

- PMC41
  - Stainless steel housing with a raised cover: approx. 3.1 lbs (1.4 kg)
  - Aluminum housing with a raised cover: approx. 3.5 lbs (1.6 kg)
- PMC45
  - Stainless steel housing with a raised cover, threaded connection or hygienic connection: approx. 4 lbs (1.8 kg)
  - Aluminum housing with a raised cover, threaded connection or hygienic connection: approx.
  - 4.6 lbs (2.1 kg)
  - → For devices with a flange, see Page 37 ff.
- PMP41
  - Stainless steel housing with a raised cover: approx. 2 lbs (0.9 kg)
  - Aluminum housing with a raised cover: approx. 2.6 lbs (1.2 kg)
- PMP45
  - Stainless steel housing with a raised cover: approx. 3.3 lbs (1.5 kg)
  - Aluminum housing with a raised cover: approx. 4 lbs (1.8 kg)
- PMP46
  - → See Page 45 ff, "Process connections PMP46".
- PMP48
  - → See Page 51 ff, "Process connections PMP48".

Material

- Housing:
  - Stainless steel: AISI 316L (1.4404) with surface roughness ≤ 0.8 µm (≤ 30 µin)
  - Die-cast aluminum with powder protective coating on polyester base
- Sight glass:
  - Non-hazardous area : polycarbonate (PC)
  - ATEX: II 1 G, II 1/2 G, II 2 G, II 1/2 GD Ex ia; II 3 G Ex nA; II 1/2 D Ex ia, II 1/3 D; FM: IS, DIP; CSA IS, Cl.II, GP; IECEx: Ex ia; TIIS: Ex ia; NEPSI: Ex ia: mineral glass
- Process diaphragm:
  - PMC41 and PMC45: Ceraphire®: Al_{2O3} aluminum oxide ceramic (FDA 21CFR186.1256, USP Class VI), ultrapure 99.9%
    (→ See also www.endress.com/ceraphire)
- Sealing ring for cover sealing:
  - Stainless steel housing: silicone covered in Teflon
  - Aluminum housing: NBR
- Nameplates:
  - Stainless steel housing: lasered onto the housing
  - Aluminum housing: AISI 304 (1.4301)
- Securing accessories: mounting bracket for pipe and wall mounting AISI 304 (1.4301)
- Capillary: AISI 316 Ti (1.4571)
- Protective hose for capillary: AISI 304 (1.4301)

→ For process connections, see Page 31 ff, "Mechanical construction" section.
→ For process diaphragms and filling oils, see Page 67 ff, "Ordering information" section.

Note!
No animal fats are used in the production of Cerabar M.

Process connections

- "Clamp connetions", "Aseptic couplings" and "Hygienic connections" and "Hygienic pipe diaphragm seal" (see also Chapter "Ordering information"): AISI 316L/1.4435
- "Threaded connection" and "DIN/EN flanges" (see also Chapter "Ordering information): stainless steel AISI 316L with the material number 1.4435 or 1.4404.
- With regard to their stability-temperature property, the materials 1.4435 and 1.4404 are grouped together under 13EO in EN 1092-1 Tab. 18. The chemical composition of the two materials can be identical.

Seals

- For universal process adapter 44mm (1.73"): silicone molded seal FDA 21CFR177.2600/USP Class VI-70C.
- For all other seals, see Page 29, "Temperature operating range, seals" section.

Planning instructions for diaphragm seal systems

Applications

Diaphragm seal systems should be used if the process media and the device should be separated. Diaphragm seal systems offer clear advantages in the following instances:
- In the event of high process temperatures (→ see also Page 29, "Process temperature limits" section.)
- For aggressive media
- If good and rapid measuring point cleaning is necessary
- If the measuring point is exposed to vibrations
- For mounting locations that are difficult to access
- For very humid mounting locations

Planning instructions

Diaphragm seals are separating units between the measuring system and the fluid.

A diaphragm seal system consists of:
- A diaphragm seal
- A capillary tube where applicable
- Fill fluid
- A pressure transmitter.

The process pressure acts via the diaphragm seal membrane on the liquid-filled system, which transfers the process pressure via the capillary tube onto the sensor of the pressure transmitter.

Note!
The correlations between the individual diaphragm seal components are presented in the following section. For further information and comprehensive diaphragm seal system designs, please contact your local Endress+Hauser Sales Center.

Diaphragm seal

The diaphragm seal determines the application range of the system by
- The diaphragm diameter
- The diaphragms: stiffness and material
- The design (oil volume)

Diaphragm diameter

The larger the diaphragm diameter (less stiffness), the smaller the temperature effect on the measurement result.
Note: To keep the temperature effect in practice-oriented limits, you should select diaphragm seals with a nominal diameter ≥ DN 80 (3"), in as far as the process connection allows for it.

Diaphragm stiffness

The stiffness is dependent on the diaphragm diameter, the material, any available coating and the diaphragm thickness and shape. The diaphragm thickness and the shape are defined in construction. The stiffness of a diaphragm seal membrane influences the temperature operating range and the measuring error caused by temperature effects.

Capillary

Capillaries with an internal diameter of 1 mm are used as standard.
The capillary tube influences the T_K zero point, the ambient temperature operating range and the response time of a diaphragm seal system as a result of its length and internal diameter.
→ See also Page 61 ff, "Influence of the temperature on the zero point" and "Ambient temperature range" sections.
→ Observe the installation instructions regarding capillary tubes. See Page 65, "Installation instructions" section.

Filling oil

When selecting the filling oil, the fluid temperature and ambient temperature as well as the operating pressure are of crucial importance. Observe the temperatures and pressures during commissioning and cleaning. A further selection criterion is the compatibility of the filling oil with the requirements of the fluid. For example, only filling oils that are harmless to health – such as vegetable oil – can be used in the food industry.
→ See also the following section "Diaphragm seal filling oils".
The filling oil used influences the T_K zero point, the temperature operating range of a diaphragm seal system and the response time. → See also Page 61 ff, "Influence of the temperature on the zero point" section.

Pressure transmitter

The pressure transmitter influences the temperature operating range, the T_K zero point and the response time as a result of its volume change. The volume change is the volume that has to be shifted to pass through the complete measuring range.
Pressure transmitters from Endress+Hauser are optimized with regard to minimum volume change.

Diaphragm seal filling oils

Version[1]	Filling oil	Permitted temperature range [2] at 0.05 bar ≤ p_{abs} ≤ 1 bar	Permitted temperature range [2] at p_{abs} ≥ 1 bar	Density [g/cm³]	Viscosity [cSt at 25°C/ 77°F]	Expansion coefficient [1/K]	T_K correction factor	Notes
A, J, O, T	Silicone oil (DC 200)	–40 to +180°C (–40 to +356°F)	–40 to +250°C (–40 to +482°F)	0.96	100	0.00096	1	Suitable for foods FDA 21 CFR 175.105
G, H, K, R	High-temp. Silicone oil (DC 704)	–10 to +200°C (+14 to +392°F)	–10 to +400°C (+14 to +752°F)	1.07	37	0.0007	0.72	High temperatures
N, B, C	Inert oil (Halocarbon)	–40 to +80°C (–40 to +176°F)	–40 to +175°C (-40 to +347°F)	1.87	27	0.000876	0.91	Oil for ultrapure gas and oxygen applications
D, F, L [3], P, S	Vegetable oil (Neobee M-20)	–10 to +120°C (+14 to +248°F)	–10 to +200°C (+14 to +392°F)	0.94	9.5	0.00101	1.05	Suitable for foods FDA 21 CFR 172.856
E	Glycerine	—	+15 to +200°C (+59 to +392°F)	1.26	1118	0.000615	0.64	Suitable for foods
M, U	Low temperature oil	–70 to +80°C –94 to +176°F	–70 to +180 °C	0.92	4.4	0.00108	1.12	Low temperatures

1) Version for feature 80 in the order code

2) Observe temperature limits of the device (→ Page 28 and Page 29)

3) Version "L" only for PMP46

Influence of the temperature on the zero point

A temperature change results in a volume change of the filling oil. The volume change depends on the expansion coefficient of the filling oil and the volume of the filling oil at calibration temperature (constant in the range: +21 to +33°C (+69.8 to 91.4°F)). → See also Page 60, "Diaphragm seal filling oils" section.
For example, the filling oil expands in the event of a temperature increase. The additional volume presses against the diaphragm seal membrane. The stiffer a diaphragm is, the greater its return force, which counteracts a volume change and acts on the measuring cell together with the operating pressure, thus shifting the zero point. For the temperature coefficients "T_K Process" and "T_K Ambient (for devices without capillaries)" see Page 45 ff, "Process connections PMP46 and PMP48" section.

The following diagrams illustrate the temperature coefficient "T_K Ambient" as a function of the capillary length. The following situation is illustrated: capillary and transmitter temperature (ambient temperature) change, the process temperature corresponds to the calibration temperature.
The temperature coefficients derived from the diagrams apply to silicone oil and diaphragm material AISI 316L/1.4435. For other filling oils, these temperature coefficients must be multiplied by the T_K correction factor of the corresponding filling oil. For the T_K correction factors, see this Page, "Diaphragm seal filling oils" section.
With regard to the temperature coefficient "T_K Ambient", devices with temperature isolators behave like devices with the same process connection with 1 m capillary.

Diagrams for diaphragm seal PMP46 with sample calculation

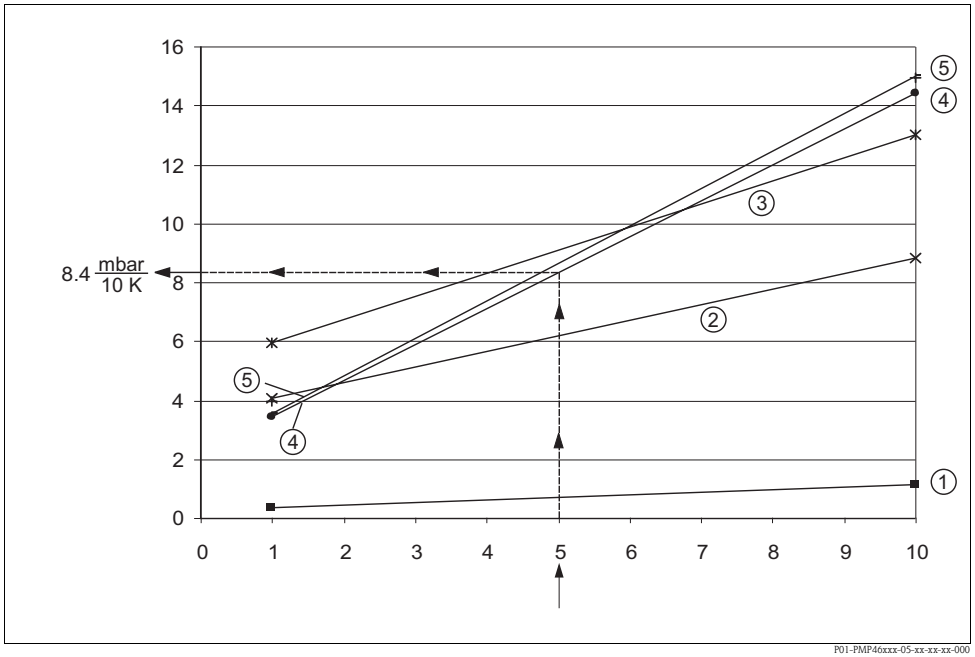

Diagram T_K Ambient as a function of the capillary length for PMP46

Example for:
– Diaphragm seal version "AL, DIN 11851 DN 50 PN 25, AISI 316L"
– Capillary length: 5 m (16 ft)
– Ambient temperature capillary/transmitter: 45°C (113°F)
– Filling oil: silicone oil

1. Select characteristic type for diaphragm seal version "AL" in accordance with the following table.
   Result: characteristic type 4
2. Determine value for T_K Ambient from the diagram.
   Result: 8.4 mbar/10 K
3. $T_{Ambient} - T_{Calibration}$ = 45 °C – 25 °C = 20 °C ⇒ 8.4 mbar/10 K x 20 K = 16.8 mbar

Result: In this example, the zero point is shifted 16.8 mbar.

Note!
- The influence of temperature on the zero point can be corrected through position adjustment.
- The temperature influence can be minimized by using a filling oil with a smaller expansion coefficient, a shorter capillary, a diaphragm seal with a larger diaphragm diameter or by using a smaller capillary internal diameter.

Characteristic type	Version [1]	Diaphragm seal
1	DU	Tri-Clamp, ISO 2852 DN 76.1 (3"), AISI 316L
2	SL	Pipe diaphragm seal Tri-Clamp, ISO 2852 DN 51 (2"), AISI 316L
3	SG	Pipe diaphragm seal Tri-Clamp, ISO 2852 DN 38 (1 1/2"), AISI 316L
4	AL	DIN 11851 DN 50 PN 25, AISI 316L
	PL	Pipe diaphragm seal DIN 11581 DN 50 PN 25, AISI 316L
5	LL	Varivent type N for pipes DN 40 – DN 162, PN 40, AISI 316L
	KL	DRD DN50 (65 mm) PN 25, AISI 316L

1) Version for feature 70 "Process connection" in the order code

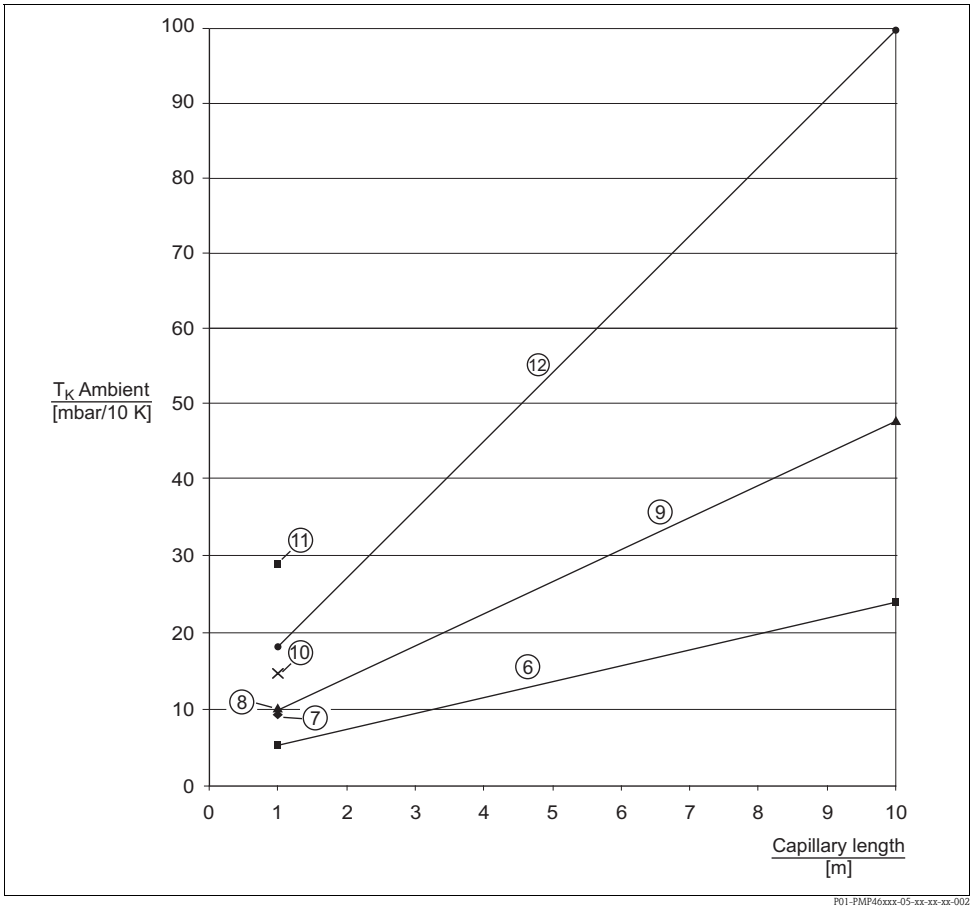

Diagram T_K Ambient as a function of the capillary length for PMP46

Characteristic type	Version [1]	Diaphragm seal
6	DL	Tri-Clamp, ISO 2852 DN 51 (2"), DIN 32676 DN 50, AISI 316L
7 [2]	SB	Pipe diaphragm seal Tri-Clamp, ISO 2852 DN 25 (1"), AISI 316L
	LB	Varivent type F for pipes DN 25 – DN 32 PN40, AISI 316L

Characteristic type	Version [1]	Diaphragm seal
8 [2]	AH	DIN 11851 DN 40, AISI 316L
	PH	Pipe diaphragm seal DIN 11851 DN 40 PN 40, AISI 316L/1.4435
9	EL	SMS 2" PN 25, AISI 316L
	FL	APV-RJT 2" PN 40, AISI316L
	GL	APV-ISS 2" PN 40, AISI316L
10 [2]	AG	DIN 11851 DN 32 PN 40, AISI 316L
	EG	SMS 1 1/2" PN 25, AISI 316L
	FG	APV-RJT 1 1/2" PN 40, AISI 316L
	GG	APV-ISS 1 1/2" PN 40, AISI 316L
	DG	Tri-Clamp, ISO 2852 DN 38 (1 1/2"), DIN 32676 DN 40, AISI 316L
11 [2]	PB	Pipe diaphragm seal DIN 11851 DN 25 PN 40, AISI 316L/1.4435
	DF	Tri-Clamp, ISO 2852 (1"), DIN 32676 DN 25, AISI 316L/1.435
12	SC	Tri-Clamp DN16 (3/4") RDM, 316L, EHEDG, 3A RDM = flow through seal

1) Version for feature 70 "Process connections" in the order code

2) Versions with 1 m (3 ft) capillary, see also feature 80 "Transmitter mounting; fill fluid"

Diagrams for diaphragm seal PMP48

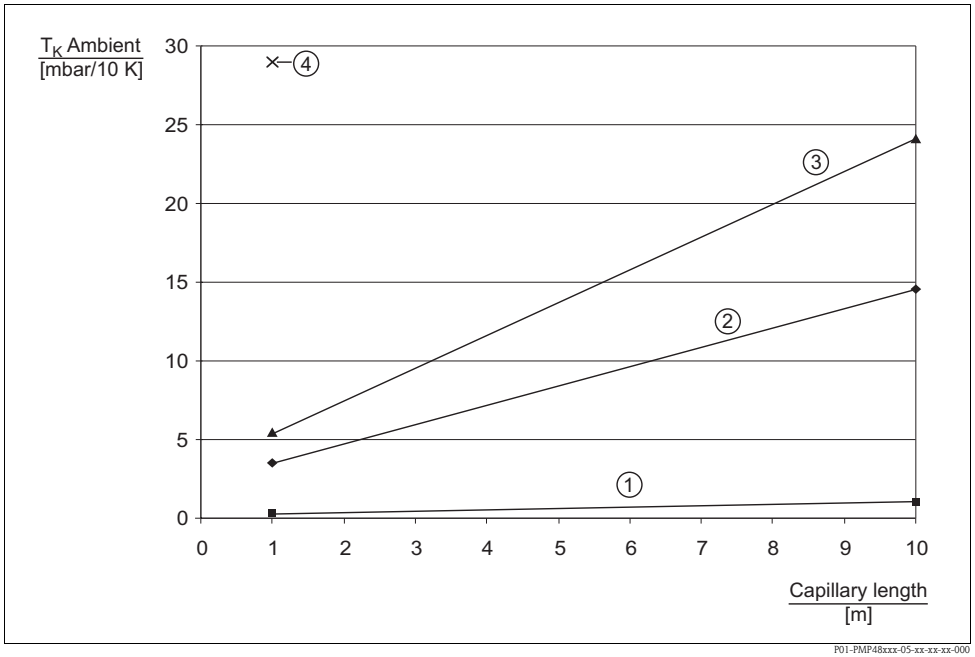

Diagram T_K Ambient as a function of the capillary length for PMP48

Characteristic type	Version [1]	Diaphragm seal
1	EU	EN/DIN flange DN 80 PN 10-40 B1, AISI 316L
	RU	JIS flange 10K 80A RF, AISI 316L
	FU	EN flange DN 80 PN 10-40 B1, extended diaphragm seal: 50 mm, AISI 316L
	GU	EN flange DN 80 PN 10-40 B1, extended diaphragm seal: 100 mm, AISI 316L
	JU	EN flange DN 80 PN 10-40 B1, extended diaphragm seal: 200 mm, AISI 316L
	KU	ANSI flange 3" 150 lbs RF, AISI 316/316L
	KV	ANSI flange 3" 300 lbs RF, AISI 316/316L
	LU	ANSI flange 3" 150 lbs RF, extended diaphragm seal: 2", AISI 316/316L
	MU	ANSI flange 3" 150 lbs RF, extended diaphragm seal: 4", AISI 316/316L
	NU	ANSI flange 3" 150 lbs RF, extended diaphragm seal: 6", AISI 316/316L
	KW	ANSI flange 4" 150 lbs RF, AISI 316/316L
	KX	ANSI flange 4" 300 lbs RF, AISI 316/316L
	LW	ANSI flange 4" 150 lbs RF, extended diaphragm seal: 2", AISI 316/316L
	MW	ANSI flange 4" 150 lbs RF, extended diaphragm seal: 4", AISI 316/316L
	NW	ANSI flange 4" 150 lbs RF, extended diaphragm seal: 6", AISI 316/316L
2	EK	EN/DIN flange DN 50 PN 10-40 B1, AISI 316L
	EM	EN/DIN flange DN 50 PN 63 B2, AISI 316L
	EN	EN/DIN flange DN 50 PN 100/160 E, AISI 316L
	EP	EN/DIN flange DN 50 PN 250 E, AISI 316L
	ER	EN/DIN flange DN 50 PN 400 E, AISI 316L
	KJ	ANSI flange 2" 150 lbs RF, AISI 316/316L
	KK	ANSI flange 2" 300 lbs RF, AISI 316/316L
	KL	ANSI flange 2" 400/600 lbs RF, AISI 316/316L
	KM	ANSI flange 2" 900/1500 lbs RF, AISI 316/316L
	KN	ANSI flange 2" 2500 lbs RF, AISI 316/316L
	RJ	JIS flange 10K 50A RF, AISI 316L
3	FK	EN flange DN 50 PN10-40 B1, extended diaphragm seal: 50 mm, AISI 316L
	GK	EN flange DN 50 PN10-40 B1, extended diaphragm seal: 100 mm, AISI 316L
	JK	EN flange DN 50 PN10-40 B1, extended diaphragm seal: 200 mm, AISI 316L
	LJ	ANSI flange 2" 150 lbs, extended diaphragm seal: 2", AISI 316L
	MJ	ANSI flange 2" 150 lbs, extended diaphragm seal: 4", AISI 316L
	NJ	ANSI flange 2" 150 lbs, extended diaphragm seal: 6", AISI 316L

1) Version for feature 70 "Process connection" in the order code

Characteristic type	Version [1]	Diaphragm seal
4 [2]	EB	EN/DIN flange DN 25 PN 10-40 B1, AISI 316L
	EC	EN/DIN flange DN 25 PN 63-160 E, AISI 316L
	ED	EN/DIN flange DN 25 PN 250 E, AISI 316L
	EF	EN/DIN flange DN 25 PN 400 E, AISI 316L
	KB	ANSI flange 1" 150 lbs RF, AISI 316/316L
	KC	ANSI flange 1" 300 lbs RF, AISI 316/316L
	KD	ANSI flange 1" 400/600 lbs RF, AISI 316/316L
	KE	ANSI flange 1" 900/1500 lbs RF, AISI 316/316L
	KF	ANSI flange 1" 2500 lbs RF, AISI 316/316L
	RB	JIS flange 10K 25A RF, AISI 316L

1) Version for feature 70 "Process connections" in the order code

2) Versions with 1 m (3 ft) capillary, see also feature 80 "Transmitter mounting; fill fluid"

Ambient temperature range

The filling oil, capillary length, capillary internal diameter, process temperature and the oil volume of the diaphragm seal determine the ambient temperature range of the diaphragm seal system. The operating range can be extended by using a filling oil with a smaller expansion coefficient and by using a shorter capillary.

Installation instructions

Instructions for diaphragm seal systems

- The diaphragm seal together with the transmitter form a closed, calibrated system, which is filled through openings in the diaphragm seal and in the measurement system of the transmitter. These openings are sealed and must not be opened.
- In the case of devices with diaphragm seals and capillaries, the zero point shift caused by the hydrostatic pressure of the filling liquid column in the capillaries must be taken into account when selecting the measuring cell. If a measuring cell with a small measuring range is selected, the sensor nominal range can be violated as a result of position adjustment.
- For devices with a temperature isolator or capillary, a suitable fastening device (mounting bracket) is recommended.
- When using a mounting bracket, sufficient strain relief must be ensured in order to prevent the capillary from buckling (capillary bending radius ≥ 100 mm / 4").

Installation instructions

In order to obtain more precise measurement results and to avoid a defect in the device, mount the capillaries as follows:

- Vibration-free (in order to avoid additional pressure fluctuations)
- Not in the vicinity of heating or cooling pipes
- Insulate if the ambient temperature is below or above the reference temperature
- With a bending radius of ≥ 100 mm (4").

Vacuum applications

For applications under vacuum, Endress+Hauser recommends mounting the pressure transmitter below the diaphragm seal. This prevents a vacuum load of the diaphragm seal caused by the presence of fill fluid in the capillary.

When the pressure transmitter is mounted above the diaphragm seal, the maximum height difference H1 – as illustrated in the following diagram – must not be exceeded. The maximum height difference depends on the density of the filling oil and the smallest ever pressure that is permitted to occur at the diaphragm seal (empty tank), see the following illustration on the right. Glycerine is not suitable for vacuum applications.

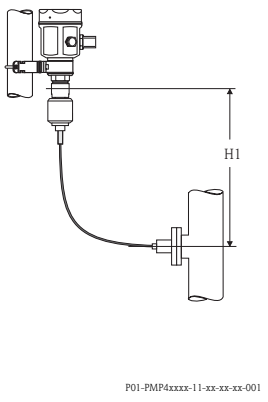

Installation above the diaphragm seal

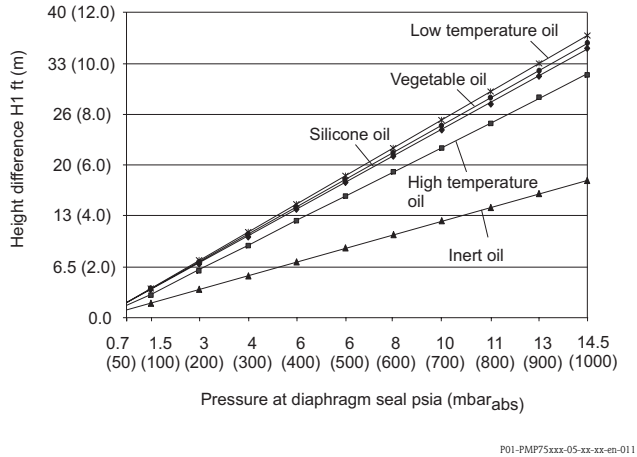

Diagram of maximum installation height above the diaphragm seal for vacuum applications

Certificates and approvals

CE mark

The device meets the legal requirements of the relevant EC directive.
Endress+Hauser confirms that the device has been tested successfully by attaching the CE mark.

Ex approvals

All explosion protection data are given in separate documentation which is available upon request. The Ex documentation is supplied as standard with all devices approved for use in hazardous areas.
→ See also Page 82 ff, "Safety conventions and icons" and "Installation/Control Drawings" sections.

Suitability for hygienic processes

The Cerabar M PMP45 and PMP46 is suitable for use in hygienic processes.
Overview of permitted process connections → Page 31 ff..
Many versions meet the requirements of 3A-Sanitary Standard No. 74.
Endress+Hauser confirms this by attaching the 3A symbol.

✎ Note!
Gap-free connections can be cleaned without residue using the usual cleaning methods.

CRN approval

Some device versions have a CRN approval. For a CRN-approved device, a CRN-approved process connection (→ see Page 31 feature 70 "Process connection") must be ordered together with a CSA approval (→ see Page 67 feature 10 "Approval"). PMP41 devices are not CRN-approved. The CRN-approved devices are fitted with a separate plate bearing the registration number 0F10525.5C.

Pressure Equipment Directive (PED)

- This measuring device corresponds to Article 3 (3) of the EC directive 97/23/EC (Pressure Equipment Directive) and has been designed and manufactured according to good engineering practice.
- PMP41 with threaded connection, PN > 200:
  suitable for stable gases in Group 1, Category I
- PMP46 with pipe diaphragm seal ≥ 1.5"/PN40 or DN40/PN40:
  suitable for stable gases in Group 1, Category II

Functional safety SIL 2/ IEC 61508/IEC 61511-1

The Cerabar M pressure transmitters with 4 to 20 mA HART electronics have been assessed by an independent body according to the IEC 61508/IEC 61511-1 standards. These devices can be used for monitoring process pressure up to SIL 2.
→ For a detailed description of safety functions with Cerabar M, settings and characteristic quantities for functional safety, see the "Functional Safety Manual – Cerabar M SD172P".

Standards and guidelines

DIN EN 60770 (IEC 60770):
Transmitters for use in industrial-process control systems
Part 1: Methods for performance evaluation

DIN 16086:
Electrical pressure measuring instruments - Pressure transmitters, pressure measuring instruments - Concepts, specifications on data sheets

EN 61326-X:
EMC product family standard for electrical equipment for measurement, control and laboratory use.

Ordering information

PMC41

This overview does not identify options which are mutually exclusive.

10	Approval:
	R For non-hazardous areas
	G ATEX II 1/2 G EEx ia IIC T6
	F ATEX II 1 G EEx ia IIC T6
	H ATEX II 2 G EEx ia IIC T6
	N ATEX II 3 G EEx nA II T5
	J ATEX II 1/2 G 1/2 D EEx ia IIC T6
	K ATEX II 1/2 D EEx ia IIC T6
	L ATEX II 1/3 D
	C CSA General Purpose
	S CSA IS, Class I, II, III Division 1, Groups A - G
	T CSA Class II, III, Division 1, Groups E – G (Dust Ex), Class I, Division 2, Groups A – D
	P FM IS, Class I, II, III, Division 1, Groups A – G
	M FM DIP, Class II, III Division 1, Groups E – G
	D IECEx Zone 1 Ex ia IIC T6
	U NEPSI Ex ia IIC T6
	Y Special version, to be specified

20		Housing; Electrical connection:
	E1	316L; gland M20, IP 66
	C1	316L; thread NPT 1/2, IP 66
	G1	316L; thread G 1/2, IP 66
	H1	316L; plug Han7D, IP 65
	L1	316L; plug M12, IP 66 (in conjunction with absolute pressure sensors IP 68/NEMA 6P)
	K1	316L; cable 5 m, IP 68 + atmospheric pressure compensation
	E2	Alu; gland M20, IP 66
	C2	Alu; thread NPT 1/2, IP 66
	G2	Alu; thread G 1/2, IP 66
	H2	Alu; plug Han7D, IP 65
	L2	Alu; plug M12, IP 66 (in conjunction with absolute pressure sensors IP 68/NEMA 6P)
	K2	Alu; cable 5 m, IP 68 + atmospheric pressure compensation
	V2	Alu; valve plug M16 ISO4400, IP64
	Y9	Special version, to be specified

30		Sensor range; MWP; OPL:		
		Sensor range	**MWP (maximum working pressure)**	**OPL (overpressure limit)**
		Sensors for overpressure		
	1C	0 to 100 mbar/10 kPa/1.5 psi	2.7 bar/270 kPa/40 psi	4 bar/400 kPa/60 psi
	1F	0 to 400 mbar/40 kPa/6 psi	5.3 bar/530 kPa/80 psi	8 bar/800 kPa/120 psi
	1H	0 to 1 bar/100 kPa/15 psi	6.7 bar/670 kPa/100 psi	10 bar/1 MPa/150 psi
	1M	0 to 4 bar/400 kPa/60 psi	16.7 bar/1.67 MPa/250 psi	25 bar/2.5 MPa/375 psi
	1P	0 to 10 bar/1 MPa/150 psi	26.7 bar/2.67 MPa/400 psi	40 bar/4 MPa/600 psi
	1S	0 to 40 bar/4 MPa/600 psi	40 bar/4 MPa/600 psi	60 bar/6 MPa/900 psi
		Sensors for negative overpressure		
	5C	–100 to 100 mbar/-10 to 10 kPa/ -1.5 to 1.5 psi	2.7 bar/270 kPa/40 psi	4 bar/400 kPa/60 psi
	5F	–400 to 400 mbar/–40 to 40 kPa/–6 to 6 psi	5.3 bar/530 kPa/80 psi	8 bar/800 kPa/120 psi
	5H	–1 to 1 bar/–100 to 100 kPa/–15 to 15 psi	6.7 bar/670 kPa/100 psi	10 bar/1 MPa/150 psi
	5M	–1 to 4 bar/–100 to 400 kPa/–15 to 60 psi	16.7 bar/1.67 MPa/250 psi	25 bar/2.5 MPa/375 psi
	5P	–1 to 10 bar/–0.1 to 1 MPa/–15 to 150 psi	26.7 bar/2.67 MPa/400 psi	40 bar/4 MPa/600 psi
		Sensors for absolute pressure		
	2F	0 to 400 mbar/40 kPa/6 psi absolute	5.3 bar/530 kPa/40 psi	8 bar/800 kPa/120 psi
	2H	0 to 1 bar/100 kPa/15 psi absolute	6.7 bar/670 kPa/80 psi	10 bar/1 MPa/150 psi
	2M	0 to 4 bar/400 kPa/60 psi absolute	16.7 bar/1.67 MPa/250 psi	25 bar/2.5 MPa/375 psi
	2P	0 to 10 bar/1 MPa/150 psi absolute	26.7 bar/2.67 MPa/400 psi	40 bar/4 MPa/600 psi
	2S	0 to 40 bar/4 MPa/600 psi absolute	40 bar/4 MPa/600 psi	60 bar/6 MPa/900 psi
	9Y	Special version, to be specified		

40			Calibration; Unit:
		1	0.2% sensor range; mbar/bar
		2	0.2% sensor range; kPa/MPa
		3	0.2 % sensor range; mmH_2O/mH_2O
		4	0.2% sensor range; inH_2O/ftH_2O
		5	0.2% sensor range; kgf/cm^2
		6	0.2% sensor range; psi

40				**Calibration; Unit:**						
				B	0.2% see additional specification					
				C	0.1% see additional specification					
				D	DKD certificate; see additional specification					
				9	Special version, to be specified					
50					**Output; Operation:**					
					A	4 to 20 mA analog; without display				
					C	4 to 20 mA analog; display bar graph				
					H	4 to 20 mA SIL HART; without display				
					J	4 to 20 mA SIL HART; display 4-digit + bar graph				
					P	PROFIBUS PA; without display				
					R	PROFIBUS PA; display 4-digit + bar graph				
					W	Without electronics; without display				
					Y	Special version, to be specified				
60						**Additional option:**				
						1	Basic version			
						2	Mounting bracket, wall/pipe			
						B	SIL + EN10204-3.1 material (process connection) inspection certificate SIL Declaration of Conformity			
						C	EN10204-3.1 material (process connection) inspection certificate			
						S	GL (German Lloyd) marine certificate			
						U	SIL Declaration of Conformity			
						Y	Special version, to be specified			
70							**Process connection:**			
							Threaded connection			
							1M	Thread ISO228 G1/2, 316L (CRN)		
							2M	Thread ISO228 G1/2, Alloy C (CRN)		
							1R	Thread ISO228 G1/2 hole 11.4 mm, 316L (CRN)		
							1P	Thread ISO228 G1/2 G1/4 (female), 316L (CRN)		
							1A	Thread ANSI MNPT 1/2 hole 11.4 mm, 316L (CRN)		
							1N	Thread ANSI MNPT 1/2 FNPT1/4, 316L (CRN)		
							2N	Thread ANSI MNPT 1/2 FNPT1/4 , Alloy C (CRN)		
							1S	Thread JIS B0202 G1/2 (male), 316L		
							1K	Thread JIS B0203 R1/2 (male) hole 11.4 mm, 316L		
							1T	Thread DIN 13 M20x1.5, AISI 316L		
							9Y	Special version, to be specified		
80								**Sensor seal:**		
								1	FKM Viton	
								2	NBR	
								4	EPDM	
								C	Chemraz	
								7	Kalrez	
								M	Kalrez, cleaned for silicone-free service	
								A	FKM Viton, cleaned from oil + grease	
								L	FKM Viton, cleaned for silicone-free service	
								6	FKM Viton, oxygen service$_2$ note application limits pressure/temp	
								9	Special version, to be specified	

PMC41										Complete order code

PMC45

This overview does not identify options which are mutually exclusive.

10	Approval:
	R For non-hazardous areas
	G ATEX II 1/2 G EEx ia IIC T6
	F ATEX II 1 G EEx ia IIC T6
	H ATEX II 2 G EEx ia IIC T6
	N ATEX II 3 G EEx nA II T5
	S CSA IS, Class I, II, III Division 1, Groups A – D, G + coal dust
	P FM IS, Class I, II, III, Division 1, Groups A – G
	D IECEx Zone 1 Ex ia IIC T6
	U NEPSI Ex ia IIC T6
	Y Special version, to be specified

20		Housing; Electrical connection:
	E1	316L; gland M20, IP 66
	C1	316L; thread NPT 1/2, IP 66
	G1	316L; thread G 1/2, IP 66
	H1	316L; plug Han7D, IP 65
	L1	316L; plug M12, IP 66 (in conjunction with absolute pressure sensors IP 68/NEMA 6P)
	K1	316L; cable 5 m, IP 68 + atmospheric pressure compensation
	E2	Alu; gland M20, IP 66
	C2	Alu; thread NPT 1/2, IP 66
	G2	Alu; thread G 1/2, IP 66
	H2	Alu; plug Han7D, IP 65
	L2	Alu; plug M12, IP 66 (in conjunction with absolute pressure sensors IP 68/NEMA 6P)
	K2	Alu; cable 5 m, IP 68 + atmospheric pressure compensation
	V2	Alu; valve plug M16 ISO4400, IP64
	Y9	Special version, to be specified

30		Sensor range; MWP; OPL:		
		Sensor range	**MWP (maximum working pressure)**	**OPL (overpressure limit)**
		Sensors for overpressure		
	1C	0 to 100 mbar/10 kPa/1.5 psi	2.7 bar/270 kPa/40 psi	4 bar/400 kPa/60 psi
	1F	0 to 400 mbar/40 kPa/6 psi	5.3 bar/530 kPa/80 psi	8 bar/800 kPa/120 psi
	1H	0 to 1 bar/100 kPa/15 psi	6.7 bar/670 kPa/100 psi	10 bar/1 MPa/150 psi
	1M	0 to 4 bar/400 kPa/60 psi	16.7 bar/1.67 MPa/250 psi	25 bar/2.5 MPa/375 psi
	1P	0 to 10 bar/1 MPa/150 psi	26.7 bar/2.67 MPa/400 psi	40 bar/4 MPa/600 psi
	1S	0 to 40 bar/4 MPa/600 psi	40 bar/4 MPa/600 psi	60 bar/6 MPa/900 psi
		Sensors for negative overpressure		
	5C	–100 to 100 mbar/-10 to 10 kPa/ -1.5 to 1.5 psi	2.7 bar/270 kPa/40 psi	4 bar/400 kPa/60 psi
	5F	–400 to 400 mbar/–40 to 40 kPa/–6 to 6 psi	5.3 bar/530 kPa/80 psi	8 bar/800 kPa/120 psi
	5H	–1 to 1 bar/–100 to 100 kPa/–15 to 15 psi	6.7 bar/670 kPa/100 psi	10 bar/1 MPa/150 psi
	5M	–1 to 4 bar/–100 to 400 kPa/–15 to 60 psi	16.7 bar/1.67 MPa/250 psi	25 bar/2.5 MPa/375 psi
	5P	–1 to 10 bar/–0.1 to 1 MPa/–15 to 150 psi	26.7 bar/2.67 MPa/400 psi	40 bar/4 MPa/600 psi
		Sensors for absolute pressure		
	2F	0 to 400 mbar/40 kPa/6 psi absolute	5.3 bar/530 kPa/40 psi	8 bar/800 kPa/120 psi
	2H	0 to 1 bar/100 kPa/150 psi absolute	6.7 bar/670 kPa/80 psi	10 bar/1 MPa/150 psi
	2M	0 to 4 bar/400 kPa/60 psi absolute	16.7 bar/1.67 MPa/250 psi	25 bar/2.5 MPa/375 psi
	2P	0 to 10 bar/1 MPa/150 psi absolute	26.7 bar/2.67 MPa/400 psi	40 bar/4 MPa/600 psi
	2S	0 to 40 bar/4 MPa/600 psi absolute	40 bar/4 MPa/600 psi	60 bar/6 MPa/900 psi
	9Y	Special version, to be specified	40 bar/4 MPa/600 psi	60 bar/6 MPa/900 psi

40		Calibration; Unit:
	1	0.2% sensor range; mbar/bar
	2	0.2% sensor range; kPa/MPa
	3	0.2 % sensor range; mmH_2O/mH_2O
	4	0.2% sensor range; inH_2O/ftH_2O
	5	0.2% sensor range; kgf/cm^2
	6	0.2% sensor range; psi
	B	0.2% see additional specification
	C	0.1% see additional specification
	D	DKD certificate; see additional specification
	9	Special version, to be specified

50		Output; Operation:
	A	4 to 20 mA analog; without display
	C	4 to 20 mA analog; display bar graph

50	Output; Operation:
H	4 to 20 mA SIL HART; without display
J	4 to 20 mA SIL HART; display 4-digit + bar graph
P	PROFIBUS PA; without display
R	PROFIBUS PA; display 4-digit + bar graph
W	Without electronics; without display
Y	Special version, to be specified

60	Additional option:
1	Basic version
B	SIL + EN10204-3.1 mat. (process connection) inspection certificate SIL Declaration of Conformity
C	EN10204-3.1 material (process connection) inspection certificate
S	GL (German Lloyd) marine certificate
U	SIL Declaration of Conformity
9	Special version, to be specified

70	Process connection:
	Threaded connection
AG	Thread ISO 228 G 1 1/2 , 316L
AR	Thread ISO 228 G 2, 316L
BF	Thread ANSI MNPT 1 1/2 , 316L (CRN)
BR	Thread ANSI MNPT 2 , 316L (CRN)
XK	Thread DIN 13 M44x1.25, 316L
	Clamp connections
DL	Tri-Clamp, ISO 2852 DN 40-51 (2"), DIN 32676 DN 50, 316L, EHEDG, 3A with HNBR/E seal (CRN)
	Hygienic connections
EG	SMS 1 1/2" PN 25, 316L, EHEDG, 3A with HNBR/EPDM seal
EL	SMS 2" PN 25, 316L, EHEDG, 3A with HNBR/EPDM seal
HL	APV-Inline DN 50 PN 40, EHEDG, 316L, 3A with HNBR/EPDM seal
LB	Varivent F for pipes DN 25 – 32 PN 40, 316L, EHEDG, 3A with HNBR/EPDM seal (CRN)
LL	Varivent N for pipes DN 40 – 162 PN 40, 316L, EHEDG, 3A with HNBR/EPDM seal (CRN)
KL	DRD 65 mm PN 25, 316L, 3A with HNBR/EPDM seal
AH	DIN 11851 DN 40 PN 40, 316L, EHEDG, 3A with HNBR/EPDM seal (CRN)
AL	DIN 11851 DN 50 PN 25, 316L, EHEDG, 3A with HNBR/EPDM seal (CRN)
	Aseptic couplings
AS	DIN 11864-1 A DN 40 pipe to DIN 11850, 316L, EHEDG, 3A with HNBR/EPDM seal
AT	DIN 11864-1 A DN 50 pipe to DIN 11850, 316L, EHEDG, 3A with HNBR/EPDM seal
	EN flanges
EK	DN 50 PN 10-40 B1, 316L, flange EN 1092-1 (DIN 2527 D)
EU	DN 80 PN 10-40 B1, 316L, flange EN 1092-1 (DIN 2527 D)
WK	DN 50 PN 10-40, ECTFE >316L, flange EN 1092-1 (DIN2527)
WU	DN 80 PN 10-40, CTFE >316L, flange EN 1092-1 (DIN2527)
	ANSI flanges
K1	1 1/2" 150 lbs RF, 316/316L, flange ANSI B16.5 (CRN)
K2	1 1/2" 300 lbs RF, 316/316L, flange ANSI B16.5 (CRN)
KJ	2" 150 lbs RF, 316/316L, flange ANSI B16.5 (CRN)
KK	2" 300 lbs RF, 316/316L, flange ANSI B16.5 (CRN)
KU	3" 150 lbs RF, 316/316L, flange ANSI B16.5 (CRN)
KV	3" 300 lbs RF, 316/316L, flange ANSI B16.5 (CRN)
KW	4" 150 lbs RF, 316/316L, flange ANSI B16.5 (CRN)
KX	4" 300 lbs RF, 316/316L, flange ANSI B16.5 (CRN)
VJ	2" 150 lbs, ECTFE >316/316L, flange ANSI B16.5
VU	3" 150 lbs, ECTFE >316/316L, flange ANSI B16.5
VN	4" 150 lbs, ECTFE >316/316L, flange ANSI B16.5
ZJ	2" 150 lbs RF, PVDF, flange ANSI B16.5
ZU	3" 150 lbs RF, PVDF, flange ANSI B16.5
	JIS flange
RI	10K 50 RF, 316L, flange JIS B2220
RJ	10K 80 RF, 316L, flange JIS B2220
	Other
HA	Universal adapter 44 mm, EHEDG, 316L incl. silicone molded seal (CRN)
XU	Welding nozzle 75 mm, 316L
YY	Special version, to be specified

80	Sensor seal:	
	1	FKM Viton
	2	HNBR (FDA)
	4	EPDM (FDA)
	C	Chemraz
	7	Kalrez
	M	Kalrez, cleaned for silicone-free service
	A	FKM Viton, cleaned from oil + grease
	L	FKM Viton, cleaned for silicone-free service
	9	Special version, to be specified

PMC45	Complete order code

PMP41

This overview does not identify options which are mutually exclusive.

10	Approval:	
	R	For non-hazardous areas
	G	ATEX II 1/2 G EEx ia IIC T6
	F	ATEX II 1 G EEx ia IIC T6
	H	ATEX II 2 G EEx ia IIC T6
	N	ATEX II 3 G EEx nA II T5
	J	ATEX II 1/2 G 1/2 D EEx ia IIC T6
	K	ATEX II 1/2 D EEx ia II T6
	L	ATEX II 1/3 D
	C	CSA General Purpose
	S	CSA IS, Class I, II, III Division 1, Groups A - G
	T	CSA Class II, III, Division 1, Groups E – G (Dust Ex); Class I, Division 2, Groups A – D
	P	FM IS, Class I, II, III Division 1, Groups A - G
	M	FM DIP, Class I, II, III Division 1, Groups E - G
	D	IECEx Zone 1 Ex ia IIC T6
	U	NEPSI Ex ia IIC T6
	Y	Special version, to be specified

20		Housing; Electrical connection:	
		E1	316L; gland M20, IP 66
		C1	316L; thread NPT 1/2, IP 66
		G1	316L; thread G 1/2, IP 66
		H1	316L; plug Han7D, IP 65
		L1	316L; plug M12, IP 66 (in conjunction with absolute pressure sensors IP 68/NEMA 6P)
		K1	316L; cable 5 m, IP 68 + atmospheric pressure compensation
		E2	Alu; gland M20, IP 66
		C2	Alu; thread NPT 1/2, IP 66
		G2	Alu; thread G 1/2, IP 66
		H2	Alu; plug Han7D, IP 65
		L2	Alu; plug M12, IP 66 (in conjunction with absolute pressure sensors IP 68/NEMA 6P)
		K2	Alu; cable 5 m, IP 68 + atmospheric pressure compensation
		V2	Alu; valve connector M16 ISO 4400, IP 64
		K2	Special version, to be specified

30			Sensor range; MWP; OPL:		
			Sensor range	**MWP (maximum working pressure)**	**OPL (overpressure limit)**
			Sensors for overpressure		
		3H	0 to 1 bar/100 kPa/15 psi	2.7 bar/270 kPa/40 psi	4 bar/400 kPa/60 psi
		3M	0 to 4 bar/400 kPa/60 psi	10.7 bar/1.07 MPa/160 psi	16 bar/1.6 MPa/240 psi
		3P	0 to 10 bar/1 MPa/150 psi	26.7 bar/2.67 MPa/400 psi	40 bar/4 MPa/600 psi
		3S	0 to 40 bar/4 MPa/600 psi	106.7 bar/10.67 MPa/ 1600 psi	160 bar/16 MPa/2400 psi
		3U	0 to 100 bar/10 MPa/1500 psi	100 bar/10 MPa/ 1500 psi	400 bar/40 MPa/6000 psi
		3Z	0 to 400 bar/40 MPa/6000 psi	400 bar/40 MPa/6000 psi	600 bar/60 MPa/9000 psi
			Sensors for negative overpressure		
		7H	–1 to 1 bar/–100 to 100 kPa/–15 to 15 psi	2.7 bar/270 kPa/40 psi	4 bar/400 kPa/60 psi
		7M	–1 to 4 bar/–100 to 400 kPa/–15 to 60 psi	10.7 bar/1.07 MPa/160 psi	16 bar/1.6 MPa/240 psi
		7P	–1 to 10 bar/–0.1 to 1 MPa/–15 to 150 psi	26.7 bar/2.67 MPa/400 psi	40 bar/4 MPa/600 psi
			Sensors for absolute pressure		
		4H	0 to 1 bar/100 kPa/15 psi absolute	2.7 bar/270 kPa/40 psi	4 bar/400 kPa/60 psi
		4M	0 to 4 bar/400 kPa/60 psi absolute	10.7 bar/1.07 MPa/160 psi	16 bar/1.6 MPa/240 psi
		4P	0 to 10 bar/1 MPa/150 psi absolute	26.7 bar/2.67 MPa/400 psi	40 bar/4 MPa/600 psi g
		4S	0 to 40 bar/4 MPa/600 psi absolute	106.7 bar/10.67 MPa/ 1600 psi	160 bar/16 MPa/2400 psi
		4U	0 to 100 bar/10 MPa/1500 psi absolute	100 bar/10 MPa/ 1500 psi	400 bar/40 MPa/6000 psi
		4Z	0 to 400 bar/40 MPa/6000 psi absolute	400 bar/40 MPa/6000 psi	600 bar/60 MPa/9000 psi
		9Y	Special version, to be specified		

40				Calibration; Unit:	
				1	0.2% sensor range; mbar/bar
				2	0.2% sensor range; kPa/MPa
				3	0.2 % sensor range; mmH_2O/mH_2O
				4	0.2% sensor range; inH_2O/ftH_2O
				5	0.2% sensor range; kgf/cm^2
				6	0.2% sensor range; psi
				B	0.2% see additional specification
				C	0.1% see additional specification

40				**Calibration; Unit:**						
				D	DKD certificate; see additional specification					
				9	Special version, to be specified					
50					**Output; Operation:**					
				A	4 to 20 mA analog; without display					
				C	4 to 20 mA analog; display bar graph					
				H	4 to 20 mA SIL HART; without display					
				J	4 to 20 mA SIL HART; display 4-digit + bar graph					
				P	PROFIBUS PA; without display					
				R	PROFIBUS PA; display 4-digit + bar graph					
				W	Without electronics; without display					
				Y	Special version, to be specified					
60						**Additional option:**				
						1	Basic version			
						2	Mounting bracket, wall/pipe			
						C	EN10204-3.1 (wetted) inspection certificate			
						S	GL/RINA marine approval			
						B	SIL + EN10204-3.1 material (wetted parts) inspection certificate SIL Declaration of Conformity			
						U	SIL Declaration of Conformity			
						9	Special version, to be specified			
70							**Process connection:**			
							Threaded connection			
							1M	Thread ISO 228 G1/2, 316L		
							1D	Thread ISO 228 G1/2 seal O-ring, 316L, flush-mounted (adapter 52002643)		
							1F	Thread ISO 228 G1/2 seal DIN 3852, 316L, flush-mounted		
							1G	Thread ANSI MNPT 1/2 hole 11.4 mm, 316L		
							1X	Thread ANSI FNPT 1/2 , 316L		
							1S	Thread JIS B0202 G1/2 (male), 316L		
							1 K	Thread JIS B0203 R1/2 (male) bore 11.4 mm, AISI 316L		
							1T	Thread DIN13 M 20x1.5, AISI 316L		
							9Y	Special version, to be specified		
80								**Seal; Fill fluid:**		
								1	FKM Viton; synthetic oil	
								4	FKM Viton, inert oil, cleaned from oil + grease	
								F	NBR O-ring; synthetic oil	
								H	FKM Viton O-ring; synthetic oil	
								P	FTFE; synthetic oil	
								A	Welded; mineral oil	
								C	Welded; inert oil, oxygen service$_2$	
								D	Welded, inert oil, cleaned from oil+grease	
								9	Special version, to be specified	
PMP41										Complete order code

PMP45

This overview does not identify options which are mutually exclusive.

10	Approval:
	R For non-hazardous areas
	G ATEX II 1/2 G EEx ia IIC T6
	F ATEX II 1 G EEx ia IIC T6
	H ATEX II 2 G EEx ia IIC T6
	N ATEX II 3 G EEx nA II T5
	J ATEX II 1/2 G 1/2D EEx ia IIC T6
	K ATEX II 1/2 D EEx ia IIC T6
	L ATEX II 1/3 D
	C CSA General Purpose
	S CSA IS, Class I, II, III Division 1, Groups A - G
	T CSA Class II, III, Division 1, Groups E – G (Dust Ex), Class I, Division 2, Groups A – D
	P FM IS, Class I, II, III, Division 1, Groups A – G
	M FM DIP, Class II, III Division 1, Groups E – G
	D IECEx Zone 1 Ex ia IIC T6
	U NEPSI EX ia IIC T6
	Y Special version, to be specified

20		Housing; Electrical connection:
	E1	316L; gland M20, IP 66
	C1	316L; thread NPT 1/2, IP 66
	G1	316L; thread G 1/2, IP 66
	H1	316L; plug Han7D, IP 65
	L1	316L; plug M12, IP 66 (in conjunction with absolute pressure sensors IP 68/NEMA 6P)
	K1	316L; cable 5 m, IP 68 + atmospheric pressure compensation
	E2	Alu; gland M20, IP 66
	E2	Alu; gland M20, IP 66
	G2	Alu; thread G 1/2, IP 66
	H2	Alu; plug Han7D, IP 65
	L2	Alu; plug M12, IP 66 (in conjunction with absolute pressure sensors IP 68/NEMA 6P)
	K2	Alu; cable 5 m, IP 68 + atmospheric pressure compensation
	V2	Alu; valve connector M16 ISO 4400, IP 64
	Y9	Special version, to be specified

30			Sensor range; MWP; OPL:		
			Sensor range	**MWP (maximum working pressure)**	**OPL (overpressure limit)**
			Sensors for overpressure		
		3H	0 to 1 bar/100 kPa/15 psi	2.7 bar/270 kPa/40 psi	4 bar/400 kPa/60 psi
		3M	0 to 4 bar/400 kPa/60 psi	10.7 bar/1.07 MPa/160 psi	16 bar/1.6 MPa/240 psi
		3P	0 to 10 bar/1 MPa/150 psi	26.7 bar/2.67 MPa/400 psi	40 bar/4 MPa/600 psi
		3S	0 to 40 bar/4 MPa/600 psi	106.7 bar/10.67 MPa/ 1600 psi	160 bar/16 MPa/2400 psi
		3U	0 to 100 bar/10 MPa/1500 psi	100 bar/10 MPa/ 1500 psi	400 bar/40 MPa/6000 psi
		3Z	0 to 400 bar/40 MPa/6000 psi	400 bar/40 MPa/6000 psi	600 bar/60 MPa/9000 psi
			Sensors for negative overpressure		
		7H	–1 to 1 bar/–100 to 100 kPa/–15 to 15 psi	2.7 bar/270 kPa/40 psi	4 bar/400 kPa/60 psi
		7M	–1 to 4 bar/–100 to 400 kPa/–15 to 60 psi	10.7 bar/1.07 MPa/160 psi	16 bar/1.6 MPa/240 psi
		7P	–1 to 10 bar/–0.1 to 1 MPa/–15 to 150 psi	26.7 bar/2.67 MPa/400 psi	40 bar/4 MPa/600 psi
			Sensors for absolute pressure		
		4H	0 to 1 bar/100 kPa/15 psi absolute	2.7 bar/270 kPa/40 psi	4 bar/400 kPa/60 psi
		4M	0 to 4 bar/400 kPa/60 psi absolute	10.7 bar/1.07 MPa/160 psi	16 bar/1.6 MPa/240 psi
		4P	0 to 10 bar/1 MPa/150 psi absolute	26.7 bar/2.67 MPa/400 psi	40 bar/4 MPa/600 psi g
		4S	0 to 40 bar/4 MPa/600 psi absolute	106.7 bar/10.67 MPa/ 1600 psi	160 bar/16 MPa/2400 psi
		4U	0 to 100 bar/10 MPa/1500 psi absolute	100 bar/10 MPa/ 1500 psi	400 bar/40 MPa/6000 psi
		4Z	0 to 400 bar/40 MPa/6000 psi absolute	400 bar/40 MPa/6000 psi	600 bar/60 MPa/9000 psi
		9Y	Special version, to be specified		

40				Calibration; Unit:
			1	0.2% sensor range; mbar/bar
			2	0.2% sensor range; kPa/MPa
			3	0.2 % sensor range; mmH_2O/mH_2O
			4	0.2% sensor range; inH_2O/ftH_2O
			5	0.2% sensor range; kgf/cm^2
			6	0.2% sensor range; psi
			B	0.2% see additional specification
			C	0.1% see additional specification

40				**Calibration; Unit:**						
				D	DKD certificate; see additional specification					
				9	Special version, to be specified					
50					**Output; Operation:**					
				A	4 to 20 mA analog; without display					
				C	4 to 20 mA analog; display bar graph					
				H	4 to 20 mA SIL HART; without display					
				J	4 to 20 mA SIL HART; display 4-digit + bar graph					
				P	PROFIBUS PA; without display					
				R	PROFIBUS PA; display 4-digit + bar graph					
				W	Without electronics; without display					
				Y	Special version, to be specified					
60						**Additional option:**				
						1	Basic version			
						C	EN10204-3.1 (wetted) inspection certificate			
						S	GL (German Lloyd) marine certificate			
						U	SIL Declaration of Conformity			
						B	SIL + EN10204-3.1 material (wetted parts) inspection certificate SIL Declaration of Conformity			
						9	Special version, to be specified			
70							**Process connection:**			
								Threaded connection		
							CD	Thread ISO 228 G1 seal metal joint, 316L, flush-mounted, adapter 52005087		
							BB	Thread ANSI MNPT 3/4, 316L, flush-mounted (CRN)		
								Clamp connections		
							DA	Mini clamp ISO 2852 DN 22, 316L, EHEDG, 3A, DIN 32676 DN 20 (CRN)		
							DB	Tri-Clamp, ISO 2852 DN 25 – 38 (1 to 1 1/2"), 316L, EHEDG, 3A, DIN 32676 DN 25 - 40 (CRN)		
							DL	Tri-Clamp, ISO 2852 DN 40 – 51 (2"), 316L, EHEDG, 3A, DIN 32676 DN50 (CRN)		
								Hygienic connections		
							EB	SMS 1" PN 25, 316L, EHEDG, 3A		
							EG	SMS 1 1/2" PN 25, 316L, EHEDG, 3A		
							LB	Varivent F for pipes DN 25 – 32 PN 40, 316L, EHEDG, 3A (CRN)		
							LG	Varivent B for pipes DN 10 – 15 PN 40, AISI 316L, EHEDG, 3A (CRN)		
							AB	DIN 11851 DN 25 PN 40, 316L, EHEDG, 3A (CRN)		
							MJ	KingGage 1777-2 (short), 316L, 3A		
							MK	KingGage 1777-2 (middle), 316L, 3A		
							ML	KingGage 1777-2 (long), 316L, 3A		
							YY	Special version, to be specified		
80									**Diaphragm, Fill fluid:**	
								A	316L, synthetic oil	
								F	316L, synthetic oil (FDA)	
								Y	Special version, to be specified	

PMP45										Complete order code

PMP46

This overview does not identify options which are mutually exclusive.

10	Approval:
	R For non-hazardous areas
	G ATEX II 1/2 G EEx ia IIC T6
	F ATEX II 1 G EEx ia IIC T6
	H ATEX II 2 G EEx ia IIC T6
	N ATEX II 3 G EEx nA II T5
	J ATEX II 1/2 G 1/2D EEx ia IIC T6
	K ATEX II 1/2 D EEx ia IIC T6
	L ATEX II 1/3 D
	C CSA General Purpose
	S CSA IS, Class I, II, III Division 1, Groups A - G
	T CSA Class II, III, Division 1, Groups E – G (Dust Ex), Class I, Division 2, Groups A – D
	P FM IS, Class I, II, III, Division 1, Groups A – G
	M FM DIP, Class II, III Division 1, Groups E – G
	D IECEx Zone 1 Ex ia IIC T6
	U NEPSI Ex ia IIC T6
	Y Special version, to be specified

20		Housing; Electrical connection:
	E1	316L; gland M20, IP 66
	C1	316L; thread NPT 1/2, IP 66
	G1	316L; thread G 1/2, IP 66
	H1	316L; plug Han7D, IP 65
	L1	316L; plug M12, IP 66 (in conjunction with absolute pressure sensors IP 68/NEMA 6P)
	K1	316L; cable 5 m, IP 68 + atmospheric pressure compensation
	E2	Alu; gland M20, IP 66
	C2	Alu; thread NPT 1/2, IP 66
	G2	Alu; thread G 1/2, IP 66
	H2	Alu; plug Han7D, IP 65
	L2	Alu; plug M12, IP 66 (in conjunction with absolute pressure sensors IP 68/NEMA 6P)
	K2	Alu; cable 5 m, IP 68 + atmospheric pressure compensation
	V2	Alu; cable 5 m, IP 68 + atmospheric pressure compensation
	Y9	Special version, to be specified

30		Sensor range; MWP; OPL:		
		Sensor range	**MWP (maximum working pressure)**	**OPL (overpressure limit)**
		Sensors for overpressure		
	3H	0 to 1 bar/100 kPa/15 psi	2.7 bar/270 kPa/40 psi	4 bar/400 kPa/60 psi
	3M	0 to 4 bar/400 kPa/60 psi	10.7 bar/1.07 MPa/160 psi	16 bar/1.6 MPa/240 psi
	3P	0 to 10 bar/1 MPa/150 psi	26.7 bar/2.67 MPa/400 psi	40 bar/4 MPa/600 psi
	3S	0 to 40 bar/4 MPa/600 psi	106.7 bar/10.67 MPa/ 1600 psi	160 bar/16 MPa/2400 psi
		Sensors for negative overpressure		
	7H	–1 to 1 bar/–100 to 100 kPa/–15 to 15 psi	2.7 bar/270 kPa/40 psi	4 bar/400 kPa/60 psi
	7M	–1 to 4 bar/–100 to 400 kPa/–15 to 60 psi	10.7 bar/1.07 MPa/160 psi	16 bar/1.6 MPa/240 psi
	7P	–1 to 10 bar/–0.1 to 1 MPa/–15 to 150 psi	26.7 bar/2.67 MPa/400 psi	40 bar/4 MPa/600 psi
		Sensors for absolute pressure		
	4H	0 to 1 bar/100 kPa/15 psi absolute	2.7 bar/270 kPa/40 psi	4 bar/400 kPa/60 psi
	4M	0 to 4 bar/400 kPa/60 psi absolute	10.7 bar/1.07 MPa/160 psi	16 bar/1.6 MPa/240 psi
	4P	0 to 10 bar/1 MPa/150 psi absolute	26.7 bar/2.67 MPa/400 psi	40 bar/4 MPa/600 psi g
	4S	0 to 40 bar/4 MPa/600 psi absolute	106.7 bar/10.67 MPa/ 1600 psi	160 bar/16 MPa/2400 psi
	9Y	Special version, to be specified		

40			Calibration; Unit:
		1	0.2% sensor range; mbar/bar
		2	0.2% sensor range; kPa/MPa
		3	0.2 % sensor range; mmH_2O/mH_2O
		4	0.2% sensor range; inH_2O/ftH_2O
		5	0.2% sensor range; kgf/cm^2
		6	0.2% sensor range; psi
		B	0.2% see additional specification
		D	DKD certificate; see additional specification
		9	Special version, to be specified

50			Output; Operation:
		A	4 to 20 mA analog; without display
		C	4 to 20 mA analog; display bar graph

50					**Output; Operation:**					
					H	4 to 20 mA HART; without display				
					J	4 to 20 mA HART; 4-digit display + bar graph				
					P	PROFIBUS PA; without display				
					R	PROFIBUS PA; display 4-digit + bar graph				
					W	Without electronics; without display				
					Y	Special version, to be specified				
60						**Additional option:**				
						1	Basic version			
						2	Mounting bracket, wall/pipe			
						C	EN10204-3.1 material (wetted) inspection certificate			
						P	Ra < 0.4 µm/15.75 µin (240 grit), electropolished + EN10204-3.1 material (wetted) inspection certificate; in conjunction with process connection versions "DG", "DL" and "LL" please order roughness test separetely			
						S	GL (German Lloyd) marine certificate			
						U	SIL Declaration of Conformity			
						B	SIL + EN10204-31 material (wetted parts) inspection certificate, SIL Declaration of Conformity			
						9	Special version, to be specified			
70							**Process connection:**			
								Clamp connections		
							DF	Tri-Clamp, ISO 2852 DN 25 (1"), 316L, EHEDG, 3A, DIN 32676 DN 25 (CRN)		
							DG	Tri-Clamp, ISO 2852 DN 38 (1 1/2"), 316L, EHEDG, 3A, DIN 32676 DN 40 (CRN)		
							DL	Tri-Clamp, ISO 2852 DN 51 (2"), DIN, 316L, EHEDG, 3A, 32676 DN 50 (CRN)		
							DU	Tri-Clamp, ISO 2852 DN 76.1 (3"), 316L, EHEDG, 3A (CRN)		
								Clamp pipe diaphragm seal (RDM)		
							SA	Clamp DN 10 (3/4") RDM, 316L, EHEDG, 3A, RDM = flow through seal (CRN)		
							SB	Clamp ISO 2852 DN 25 (1") RDM, 316L, EHEDG, 3A, RDM = flow through seal (CRN)		
							SC	Clamp DN16 (3/4") RDM, 316L, EHEDG, 3A RDM = flow through seal		
							SG	Clamp, ISO 2852 DN 38 (1 1/2") RDM, 316L, EHEDG, 3A, 3.1 material + pressure test PED Cat. II, RDM = flow through seal (CRN)		
							SL	Clamp ISO 2852 DN 51 (2") 316L, EHEDG, 3A, 3.1 material + pressure test PED Cat.II, RDM = flow through seal (CRN)		
								Hygienic connections		
							EG	SMS 1 1/2" PN 25, 316L, EHEDG, 3A		
							EL	SMS 2" PN 25, 316L, EHEDG, 3A		
							FG	APV-RJT 1 1/2" PN 40, 316L		
							FL	APV-RJT 2" PN 40, 316L, 3A		
							GG	APV-ISS 1 1/2" PN 40, 316L, 3A		
							GL	APV-ISS 2" PN 40, 316L, 3A		
							KL	DRD 65 mm PN 25, 316L, 3A		
							LB	Varivent F for pipes DN 25 – 32 PN 40, 316L, EHEDG, 3A		
							LL	Varivent N for pipes DN 40 – 162 PN 40, 316L, EHEDG, 3A		
							AG	DIN 11851 DN 32 PN 40, 316L, EHEDG, 3A		
							AH	DIN 11851 DN 40 PN 40, 316L, EHEDG, 3A		
							AL	DIN 11851 DN 50 PN 25, 316L, EHEDG, 3A		
								Hygienic pipe diaphragm seal (RDM)		
							PB	DIN 11851 DN 25 PN 40 RDM, 316L, EHEDG, 3A, RDM = flow through seal		
							PH	DIN 11851 DN 40 PN 40 RDM, 316L, EHEDG, 3A, 3.1 material + pressure test PED Cat. II, RDM = flow through seal		
							YY	Special version, to be specified		
80									**Transmitter mounting; Fill fluid:**	
									A	Direct; silicone oil
									D	Direct; vegetable oil (FDA)
									E	Direct; glycerine
									N	Oxygen service$_2$; inert oil, note application limits pressure/temp.
									L	Temperature isolator 100 mm; vegetable oil (FDA)
									G	Temperature isolator 100 mm; high-temperature oil
									K	1 m capillary; high-temperature oil
									O	1 m capillary; silicone oil
									P	1 m capillary; vegetable oil (FDA)
									H	..... m capillary; high-temperature oil (capillary > 1 m, only as of DN 50/2"; capillary length: 1 – 10 m, price independent of length)
									M	..... m capillary; low-temperature oil (capillary > 1 m, only as of DN 50/2"; capillary length: 1 – 10 m, price independent of length)
									F	..... m capillary; vegetable oil (FDA) (capillary > 1 m, only as of DN 50/2"; capillary length: 1 – 10 m, price independent of length)

80								**Transmitter mounting; Fill fluid:**	
								J	..... m capillary; silicone oil (capillary > 1 m, only as of DN 50/2"; capillary length: 1 – 10 m, price independent of length)
								B	..... m capillary; inert oil
								R	..... ft capillary; high-temperature oil (capillary > 3 ft, only as of DN 50/2"; capillary length: 3 – 33 ft, price independent of length)
								U	..... ft capillary; low-temperature oil (capillary > 3 ft, only as of DN 50/2"; capillary length: 3 – 33 ft, price independent of length)
								S	..... ft capillary; vegetable oil (FDA) (capillary > 3 ft, only as of DN 50/2"; capillary length: 3 – 33 ft, price independent of length)
								T	..... ft capillary; silicone oil (capillary > 3 ft, only as of DN 50/2"; capillary length: 3 – 33 ft, price independent of length)
								C	..... ft capillary; inert oil (capillary > 3 ft, only as of DN 50/2"; capillary length: 3 – 33 ft, price independent of length)
								Y	Special version, to be specified

PMP46									Complete order code

PMP48

This overview does not identify options which are mutually exclusive.

10	Approval:
	R For non-hazardous areas
	G ATEX II 1/2 G EEx ia IIC T6
	F ATEX II 1 G EEx ia IIC T6
	H ATEX II 2 G EEx ia IIC T6
	N ATEX II 3 G EEx nA II T5
	J ATEX II 1/2 G 1/2D EEx ia IIC T6
	K ATEX II 1/2 D EEx ia IIC T6
	L ATEX II 1/3 D
	C CSA General Purpose
	S CSA IS, Class I, II, III Division 1, Groups A - G
	T CSA Class II, III, Division 1, Groups E – G (Dust Ex), Class I, Division 2, Groups A – D
	P FM IS, Class I, II, III, Division 1, Groups A – G
	M FM DIP, Class II, III Division 1, Groups E – G
	D IECEx Zone 1 Ex ia IIC T6
	U NEPSI Ex ia IIC T6
	Y Special version, to be specified

20		Housing; Electrical connection:
	E1	316L; gland M20, IP 66
	C1	316L; thread NPT 1/2, IP 66
	G1	316L; thread G 1/2, IP 66
	H1	316L; plug Han7D, IP 65
	L1	316L; plug M12, IP 66 (in conjunction with absolute pressure sensors IP 68/NEMA 6P)
	K1	316L; cable 5 m, IP 68 + atmospheric pressure compensation
	E2	Alu; gland M20, IP 66
	C2	Alu; thread NPT 1/2, IP 66
	G2	Alu; thread G 1/2, IP 66
	H2	Alu; plug Han7D, IP 65
	L2	Alu; plug M12, IP 66 (in conjunction with absolute pressure sensors IP 68/NEMA 6P)
	K2	Alu; cable 5 m, IP 68 + atmospheric pressure compensation
	Y9	Special version, to be specified

30		Sensor range; MWP; OPL:		
		Sensor range	**MWP (maximum working pressure)**	**OPL (overpressure limit)**
		Sensors for overpressure		
	3H	0 to 1 bar/100 kPa/15 psi	2.7 bar/270 kPa/40 psi	4 bar/400 kPa/60 psi
	3M	0 to 4 bar/400 kPa/60 psi	10.7 bar/1.07 MPa/160 psi	16 bar/1.6 MPa/240 psi
	3P	0 to 10 bar/1 MPa/150 psi	26.7 bar/2.67 MPa/400 psi	40 bar/4 MPa/600 psi
	3S	0 to 40 bar/4 MPa/600 psi	106.7 bar/10.67 MPa/ 1600 psi	160 bar/16 MPa/2400 psi
	3U	0 to 100 bar/10 MPa/1500 psi	100 bar/10 MPa/ 1500 psi	400 bar/40 MPa/6000 psi
	3Z	0 to 400 bar/40 MPa/6000 psi	400 bar/40 MPa/6000 psi	600 bar/60 MPa/9000 psi
		Sensors for negative overpressure		
	7H	–1 to 1 bar/–100 to 100 kPa/–15 to 15 psi	2.7 bar/270 kPa/40 psi	4 bar/400 kPa/60 psi
	7M	–1 to 4 bar/–100 to 400 kPa/–15 to 60 psi	10.7 bar/1.07 MPa/160 psi	16 bar/1.6 MPa/240 psi
	7P	–1 to 10 bar/–0.1 to 1 MPa/–15 to 150 psi	26.7 bar/2.67 MPa/400 psi	40 bar/4 MPa/600 psi
		Sensors for absolute pressure		
	4H	0 to 1 bar/100 kPa/15 psi absolute	2.7 bar/270 kPa/40 psi	4 bar/400 kPa/60 psi
	4M	0 to 4 bar/400 kPa/60 psi absolute	10.7 bar/1.07 MPa/160 psi	16 bar/1.6 MPa/240 psi
	4P	0 to 10 bar/1 MPa/150 psi absolute	26.7 bar/2.67 MPa/400 psi	40 bar/4 MPa/600 psi g
	4S	0 to 40 bar/4 MPa/600 psi absolute	106.7 bar/10.67 MPa/ 1600 psi	160 bar/16 MPa/2400 psi
	4U	0 to 100 bar/10 MPa/1500 psi absolute	100 bar/10 MPa/ 1500 psi	400 bar/40 MPa/6000 psi
	4Z	0 to 400 bar/40 MPa/6000 psi absolute	400 bar/40 MPa/6000 psi	600 bar/60 MPa/9000 psi
	9Y	Special version, to be specified		

40			Calibration; Unit:
		1	0.2% sensor range; mbar/bar
		2	0.2% sensor range; kPa/MPa
		3	0.2 % sensor range; mmH_2O/mH_2O
		4	0.2% sensor range; inH_2O/ftH_2O
		5	0.2% sensor range; kgf/cm^2
		6	0.2% sensor range; psi
		B	0.2% see additional specification
		D	DKD certificate; see additional specification
		9	Special version, to be specified

50	**Output; Operation:**	
	A	4 to 20 mA analog; without display
	C	4 to 20 mA analog; display bar graph
	H	4 to 20 mA SIL HART; without display
	J	4 to 20 mA SIL HART; display 4-digit + bar graph
	P	PROFIBUS PA; without display
	R	PROFIBUS PA; display 4-digit + bar graph
	W	Without electronics; without display
	Y	Special version, to be specified
60	**Additional option:**	
	1	Basic version
	2	Mounting bracket, wall/pipe
	C	EN10204-3.1 material (wetted) inspection certificate
	S	GL (German Lloyd) marine certificate
	U	SIL Declaration of Conformity
	B	SIL + EN10204-3.1 material (wetted parts) inspection certificate, SIL Declaration of Conformity
	Y	Special version, to be specified
70	**Process connection:**	
		Threaded connection
	CA	Thread ISO 228 G 1/2, 316L, separator
	AF	Thread ISO 228 G 1, 316L
	AG	Thread ISO 228 G 1 1/2, 316L
	AR	Thread ISO 228 G 2, 316L
	DA	Thread ANSI NPT 1/2, 316L, separator (CRN)
	BF	Thread ANSI NPT 1, 316L (CRN)
	BG	Thread ANSI NPT 1 1/2 , 316L (CRN)
	BR	Thread ANSI NPT 2, 316L (CRN)
		EN flanges
	EB	DN 25 PN 10 – 40 B1, 316L, flange EN10921-1 (DIN2527 D)
	EC	DN 25 PN 64 – 160 E, 316L, flange DIN2501
	ED	DN 25 PN 250 E, 316L, flange DIN2501
	EF	DN 25 PN 400 E, 316L, , flange DIN2501
	EK	DN 50 PN 10-40 B1, 316L, flange EN10921-1 (DIN2527 D)
	EM	DN 50 PN 63 B2, 316L, flange EN10921-1 (DIN2527 E)
	EN	DN 50 PN 100-160 E, 316L, flange DIN2501
	EP	DN 50 PN 250 E, 316L, flange DIN2501
	ER	DN 50 PN 400 E, 316L, flange DIN2501
	EU	DN 80 PN 10 – 40 B1, 316L, flange EN10921-1 (DIN2527 D)
		EN flanges with extended diaphragm seal
	FK	DN 50 PN 10 – 40 B1, 316L, 50 mm barrel (DIN2527 D)
	GK	DN 50 PN 10 – 40 B1, 316L, 100 mm barrel (DIN2527 D)
	JK	DN 50 PN 10 – 40 B1, 316L, 200 mm barrel (DIN2527 D)
	FU	DN 80 PN 10 – 40 B1, 316L, 50 mm barrel (DIN2527 D)
	GU	DN 80 PN 10 – 40 B1, 316L, 100 mm barrel (DIN2527 D)
	JU	DN 80 PN 10 – 40 B1, 316L, 200 mm barrel (DIN2527 D)
		ANSI flanges
	KB	1" 150 lbs RF, 316/316L, flange ANSI B16.5 (CRN)
	KC	1" 300 lbs RF, 316/316L, flange ANSI B16.5 (CRN)
	KD	1" 400/600 lbs RF, 316/316L, flange ANSI B16.5 (CRN)
	KE	1" 900/1500 lbs RF, 316/316L, flange ANSI B16.5 (CRN)
	KF	1" 2500 lbs RF, 316/316L, flange ANSI B16.5 (CRN)
	KJ	2" 150 lbs RF, 316/316L, flange ANSI B16.5 (CRN)
	KK	2" 300 lbs RF, 316/316L, flange ANSI B16.5 (CRN)
	KL	2" 400/600 lbs RF, 316/316L, flange ANSI B16.5 (CRN)
	KM	2" 900/1500 lbs RF, 316/316L, flange ANSI B16.5 (CRN)
	KN	2" 2500 lbs RF, 316/316L, flange ANSI B16.5 (CRN)
	KU	3" 150 lbs RF, 316/316L, flange ANSI B16.5 (CRN)
	KV	3" 300 lbs RF, 316/316L, flange ANSI B16.5 (CRN)
	KW	4" 150 lbs RF, 316/316L, flange ANSI B16.5 (CRN)
	KX	4" 300 lbs RF, 316/316L, flange ANSI B16.5 (CRN)
		ANSI flanges with extended diaphragm seal
	LJ	2" 150 lbs RF, 316/316L, 2" barrel, flange ANSI B16.5 (CRN)
	MJ	2" 150 lbs RF, 316/316L, 4" barrel, flange ANSI B16.5 (CRN)
	NJ	2" 150 lbs RF, 316/316L, 6" barrel, flange ANSI B16.5 (CRN)
	LU	3" 150 lbs RF, 316/316L, 2" barrel, flange ANSI B16.5 (CRN)
	MU	3" 150 lbs RF, 316/316L, 4" barrel, flange ANSI B16.5 (CRN)
	NU	3" 150 lbs RF, 316/316L, 6" barrel, flange ANSI B16.5 (CRN)

70	**Process connection:**	
	LW	4" 150 lbs RF, 316/316L, 2" barrel, flange ANSI B16.5 (CRN)
	MW	4" 150 lbs RF, 316/316L, 4" barrel, flange ANSI B16.5 (CRN)
	NW	4" 150 lbs RF, 316/316L, 6" barrel, flange ANSI B16.5 (CRN)
		JIS flanges
	RB	10K 25 RF, 316L, flange JIS B2220
	RJ	10K 50 RF, 316L, flange JIS B2220
	RU	10K 80 RF, 316L, flange JIS B2220
	YY	Special version, to be specified

80		**Transmitter mounting; Fill fluid:**
	A	Direct; silicone oil
	D	Direct; vegetable oil (FDA)
	E	Direct; glycerine
	N	Oxygen service$_2$; inert oil, note application limits pressure/temp.
	G	Temperature isolator 100 mm; high-temperature oil
	K	1 m capillary; high-temperature oil
	P	1 m capillary; vegetable oil (FDA)
	O	1 m capillary; silicone oil
	B	..... m capillary; inert oil (capillary > 1 m, only as of DN 50/2"; Capillary length: 1 – 10 m, price independent of length)
	H	..... m capillary; high-temperature oil (capillary > 1 m, only as of DN 50/2"; Capillary length: 1 – 10 m, price independent of length)
	M	..... m capillary; low-temperature oil (capillary > 1 m, only as of DN 50/2"; Capillary length: 1 – 10 m, price independent of length)
	F	..... m capillary; vegetable oil (FDA) (capillary > 1 m, only as of DN 50/2"; Capillary length: 1 – 10 m, price independent of length)
	J	..... m capillary; silicone oil (capillary > 1 m, only as of DN 50/2"; Capillary length: 1 – 10 m, price independent of length)
	C	..... ft capillary; inert oil (capillary > 3 ft, only as of DN 50/2"; Capillary length: 3 – 33 ft, price independent of length)
	R	..... ft capillary; high-temperature oil (capillary > 3 ft, only as of DN 50/2"; Capillary length: 3 – 33 ft, price independent of length)
	U	..... ft capillary; low-temperature oil (capillary > 3 ft, only as of DN 50/2"; Capillary length: 3 – 33 ft, price independent of length)
	S	..... ft capillary; vegetable oil (FDA) (capillary > 3 ft, only as of DN 50/2"; Capillary length: 3 – 33 ft, price independent of length)
	T	..... m capillary; silicone oil (capillary > 3 ft m, only as of DN 50/2"; Capillary length: 3 – 33 ft, price independent of length)
	Y	Special version, to be specified

90		**Diaphragm material:**
		Extended diaphragm seal versions only as 316L
	1	316L
	2	Alloy C276
	5	Tantalum
	7	316L with 0.09 PTFE foil (not for vacuum applications)
	8	316L with 0.25 PTFE foil (not for vacuum applications)
	Y	Special version, to be specified

PMP48	Complete order code

Additional Documentation

Field of Activities

- Pressure measurement, powerful measuring instruments for process pressure, differential pressure, level and flow: FA004P/00/en

Technical Information

- EMC test procedures TI241F/00/en

Operating Instructions

- Cerabar M (4 to 20 mA analog): BA200P/00/en
- Cerabar M (4 to 20 mA HART): BA201P/00/en
- Cerabar M (PROFIBUS PA): BA222P/00/en

Functional Safety Manual (SIL)

- Cerabar M (4 to 20 mA HART): SD172P/00/en

Safety conventions and icons

Certificate/ Type of Protection	Device	Electronic insert	Documentation
ATEX II 1 G EEx ia IIC T6	PMC41, PMC45, PMP41, PMP45, PMP46, PMP48	– 4 to 20 mA HART – PROFIBUS PA	– XA297P – XA311P
ATEX II 1/2 G EEx ia IIC T6 or ATEX II 2 G EEx ia IIC T6	PMC41, PMC45, PMP41, PMP45, PMP46, PMP48	– 4 to 20 mA – 4 to 20 mA HART – PROFIBUS PA	– XA039P – XA039P – XA096P
ATEX II 1/2 G 1/2 D EEx ia IIC T6	PMC41, PMP41, PMP45, PMP46, PMP48	– 4 to 20 mA HART – PROFIBUS PA	– XA309P – XA310P
ATEX II 1/3 D	PMC41, PMP41, PMP45, PMP46, PMP48	– 4 to 20 mA – 4 to 20 mA HART – PROFIBUS PA	– XA040P – XA040P – XA098P
ATEX II 3 G EEx nA II T5	PMC41, PMC45, PMP41, PMP45, PMP46, PMP48	– 4 to 20 mA – 4 to 20 mA HART – PROFIBUS PA	– XA052P – XA052P – XA052P
ATEX II 1/2 D EEx ia T6	PMC41, PMP41, PMP45, PMP46, PMP48	– 4 to 20 mA HART – PROFIBUS PA	– XA038P – XA097P

Certificate/ Type of Protection	Device	Electronic insert	Documentation
IECEx Zone 1 Ex ia IIC T6	PMC41, PMC45, PMP41, PMP45, PMP46, PMP48	– 4 to 20 mA HART	– XB013P

Certificate/ Type of Protection	Device	Electronic insert	Documentation
NEPSI Ex ia IIC T6	PMC41, PMC45, PMP41, PMP45, PMP46, PMP48	– 4 to 20 mA HART, PROFIBUS PA	– XA419P

Installation/Control Drawings

Certificate/ Type of Protection	Device	Electronic insert	Documentation
FM IS Class I, II, III, Division 1, Groups A – G	PMC41, PMC45, PMP41, PMP45, PMP46, PMP48	– 4 to 20 mA – 4 to 20 mA HART – PROFIBUS PA	– ZD039P – ZD039P – ZD052P
CSA IS Class I, II, III, Division 1, Groups A – G	PMC41, PMC45, PMP41, PMP45, PMP46, PMP48	– 4 to 20 mA – 4 to 20 mA HART – PROFIBUS PA	– ZD040P – ZD040P – ZD051P

Accessories

- Continental Tank Spud adapter
  King-Gage adapter to Continental tank spud adapter requires the PMP45 with standard length King-Gage process connection (PMP45 process connection code MK, page 75) complete with cap screws and o-ring.
  Part No. 84601096

- Tank-Mate Tank Spud adapters
  King-Gage to Tank-Mate spud adapter (short) requires the PMP45 with standard King-Gage process connection (PMP45 processn connection code MK, page 75) complete with acorn nuts and standoffs.
  Part No. 84601096

  King-Gage to Tank-Mate tank spud adapter (long) requires the PMP45 with standard King-Gage process connection (PMP45 process connection code ML, page 75) complete with acorn nuts.
  Part No. 84601097

United States	Canada	Mexico
Endress+Hauser, Inc. 2350 Endress Place Greenwood, IN 46143 Tel. 317-535-7138 Sales 888-ENDRESS Service 800-642-8737 fax 317-535-8498 inquiry@us.endress.com www.us.endress.com	Endress+Hauser Canada 1075 Sutton Drive Burlington, ON L7L 5Z8 Tel. 905-681-9292 800-668-3199 Fax 905-681-9444 info@ca.endress.com www.ca.endress.com	Endress+Hauser, México, S.A. de C.V. Fernando Montes de Oca 21 Edificio A Piso 3 Fracc. Industrial San Nicolás 54030. Tlalnepantla de Baz Estado de México México Tel: +52 55 5321 2080 Fax +52 55 5321 2099 eh.mexico@mx.endress.com www.mx.endress.com

TI399P/24/ae/08.08
© 2008 Endress+Hauser, Inc.

Endress+Hauser

People for Process Automation

BA 201P/24/ae/12.03
52004215
Software Version 1.1/1.2

cerabar M
HART
Pressure Transmitter

Operating Instructions

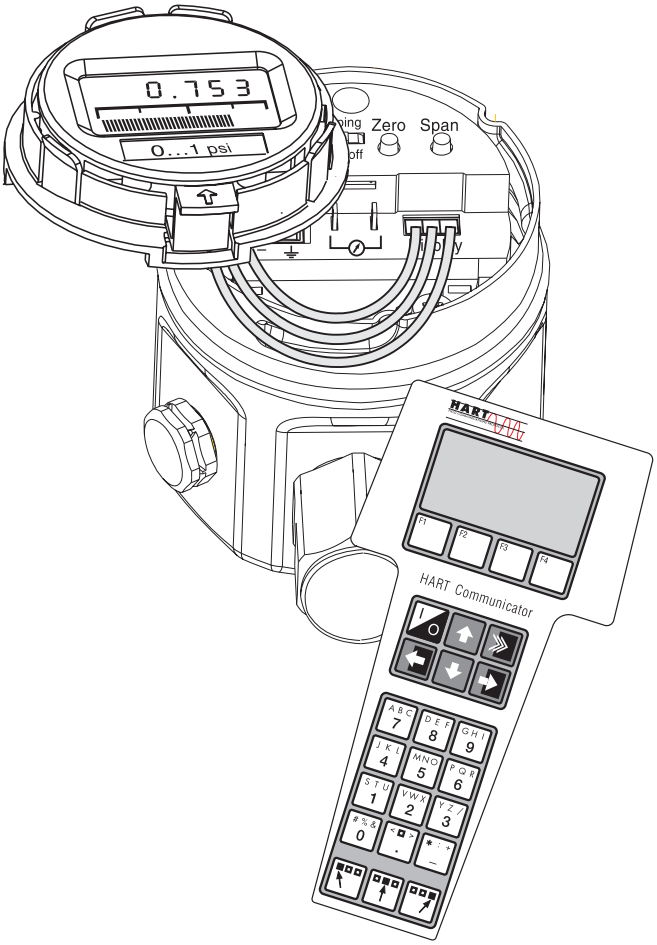

Endress+Hauser
The Power of Know How

Short Operating Instructions

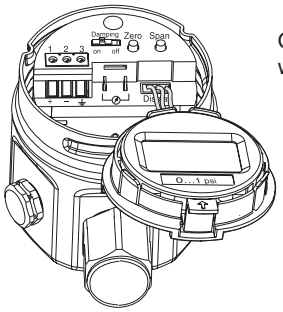

On-site operation
with digital display

Remote operation
via HART® protocol

Operation:
– Function of the display
Chap. 3.2
– Position and function
of the operating elements
on the electronic insert
Chap. 3.3

Commissioning:
– Chap. 4.1

Operation:
– via Commuwin II
Chap. 3.4
– via Universal HART®
Communicator
DXR 275
Chap. 3.5

Commissioning:
– Chap. 4.2

Software History

Software version	Valid Operating Instructions (BA)	Device and software no.	Software changes	BA changes
1.0	04.99	8010	–	–
1.1/1.2	04.02	8011/8012	On-site commissioning: Delayed adopting of Zero, Span and bias pressure	Chapter 4.1
			Reset to factory setting on-site: Option of resetting using keys	Chapter 4.1

Table of Contents

Software History 2

Notes on Safety 4

1 Introduction 6

2 Installation 7
2.1 Installation instructions for PMC 41, PMC 45, PMP 41 and PMP 45 7
2.2 Installation instructions for PMP 46 and PMP 48 8
2.3 Housing versions 10
2.4 Mounting accessories 11
2.5 Electrical connection 12

3 Operation 15
3.1 Access to the operating elements 15
3.2 Function of the display 16
3.3 Position and function of the operating elements on the electronic insert 16
3.4 Operating via Commuwin II 17
3.5 Operating via Universal HART® Communicator DXR 275 18

4 Commissioning 19
4.1 On-site commissioning 19
4.2 Commissioning and operation using communication 21
4.3 Locking/unlocking the operation 23
4.4 Information on measuring point 24

5 Diagnosis and Troubleshooting 25
5.1 Diagnosis of errors and warnings 25
5.2 Current simulation 26
5.3 Reset 26

6 Maintenance and Repair 28
6.1 Maintenance 28
6.2 Repair 28
6.3 Returning for repair 28
6.4 Repair of certified devices 29
6.5 Spare parts 29
6.6 Mounting the digital display 34
6.7 Changing the electronic insert 35
6.8 Changing the sensor 37
6.9 Changing the process seal 37
6.10 Sensor calibration 39

7 Technical Data 40
7.1 Dimensions 44

8 Operating Matrix 45

Index 46

Return Authorization Policy 51

Notes on Safety

Approved usage

The Cerabar M is a pressure transmitter that is used for gauge pressure or absolute pressure measurement, depending on the version.

Installation, commissioning, operation

The Cerabar M has been designed to operate safely in accordance with current technical, safety and EU standards. If installed incorrectly or used for applications for which it is not intended, however, it is possible that application-related dangers may arise, e.g. product overspill due to incorrect installation or calibration. For this reason, the device must be installed, connected, commissioned, operated and maintained by personnel that are authorized and suitably qualified. This Operating Instructions must have been read and understood, and the instructions followed. Modifications and repairs to the device are permissible only when they are expressly approved in the Operating Instructions.

Please pay particular attention to the technical data on the nameplate. The MWP (maximum working pressure) is specified on the nameplate. The value refers to a reference temperature of 68 °F (20 °C) or 100 °F for ANSI flanges.

- Test pressure (over pressure limit OPL) = MWP (nameplate) x 1.5
- The pressure values permitted at higher temperatures can be found in the following standards: EN 1092-1: 2001 Tab. 18; ASME B 16.5a - 1998 Tab. 2-2.2 F316; ASME B 16.5a - 1998 Tab. 2.3.8 N10276; JIS B2201

Explosion hazardous areas

If the device is to be installed in a hazardous area, then national and local regulations must be observed. The device can be supplied with the following certificates as listed in the table below. The certificates are identified by the first letter of the order code on the nameplate (see table below).

- Ensure that all personnel are suitably qualified.
- Observe the specifications in the certificate as well as national and local regulations.
- The requirements regarding measurement and safety equipment at the measuring points must be met.

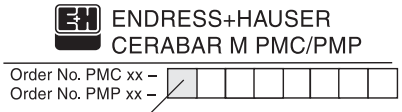

Certificates for applications in explosion hazardous areas

Code	Certificate	Type of protection
R	Standard	None
G	DMT	ATEX II 1/2 G EEx ia IIC T4/T6
K	DMT	PMC 41, PMP 41/45/46/48: ATEX II 1/2D EEx ia IIC T4/T6
L	DMT	PMC 41, PMP 41/45/46/48: ATEX II 1/3D (none - Ex power supply)
H	DMT	ATEX II 2 G EEx ia IIC T4/T6
N	ATEX	ATEX II 3 G EEx nA II T5 (Zone 2)
C	CSA	General Purpose
S	CSA	IS (suitable for Div. 2) Class I, II, III, Div. 1, Groups E-G PMC 45: Groups A-D, G + Coal Dust
T	CSA	PMC 41, PMP 41/45/46/48: Class I, Div. 2, Groups A-D, Class II, III, Div. 1, Groups E-G
P	FM	IS Class I, II, III, Div. 1, Groups A-G
M	FM	PMC 41, PMP 41/45/46/48: DIP, Class II, III, Div. 1, Groups E-G
V	TIIS	TIIS Ex ia IIC T6

Safety Conventions and Symbols

In order to highlight safety-relevant or alternative operating procedures in the manual, the following conventions have been used, each indicated by a corresponding icon in the margin.

Safety conventions

Symbol	Meaning
Note!	**Note!** Notes draw attention to activities or procedures that can have a direct influence on operation or trigger an unforeseen device reaction if they are not carried out properly.
Caution!	**Caution!** Cautions draw attention to activities or procedures that can lead to persons being injured or to incorrect device operation if they are not carried out properly.
Warning!	**Warning!** Warnings draw attention to activities or procedures that can lead to persons being seriously injured, to safety risks or to the destruction of the device if they are not carried out properly.

Explosion protection

Symbol	Meaning
	Explosion protected, type examined operating equipment If this icon is on the device's nameplate, the device can be used in hazardous areas.
	Hazardous area This symbol identifies the hazardous area in the diagrams in these Operating Instructions. – Devices that are used in hazardous areas or cables for such devices must have the corresponding type of protection.
	Safe area (non-hazardous areas) This symbol identifies the non-hazardous area in the diagrams in these Operating Instructions. – Devices in non-hazardous areas must also be certified if connection cables run through a hazardous area.

Electrical symbols

Symbol	Meaning
	Direct current A terminal at which direct current voltage is present or through which direct current flows.
	Alternating current A terminal at which (sinusoidal) alternating voltage is present or through which alternating current flows.
	Ground connection A grounded terminal that, from the user's viewpoint, is already grounded via a grounding system.
	Protective grounding (earth) terminal A terminal that has to be grounded before other connections can be made.
	Equipotential connection A connection that has to be connected to the machine's grounding system: This can be, for example, a potential matching line or a star-shaped grounding system, depending on national or company practice.

1 Introduction

Application

The Cerabar M pressure transmitters measure the pressure of gases, vapors, liquids and dusts and are used in all areas of chemical and process engineering.

Operating principle

Ceramic measuring cell
The system pressure acts directly on the rugged ceramic diaphragm of the pressure sensor deflecting it by a maximum of 0.0098 in. (0.025 mm). A pressure-proportional change in the capacitance is measured at the electrodes of the ceramic substrate and diaphragm. The measuring range is determined by the thickness of the ceramic diaphragm.

Metal measuring cell
The process pressure deflects the separating diaphragm with a fill fluid transmitting the pressure to a resistance bridge. The bridge output voltage, which is proportional to pressure, is then measured and processed.

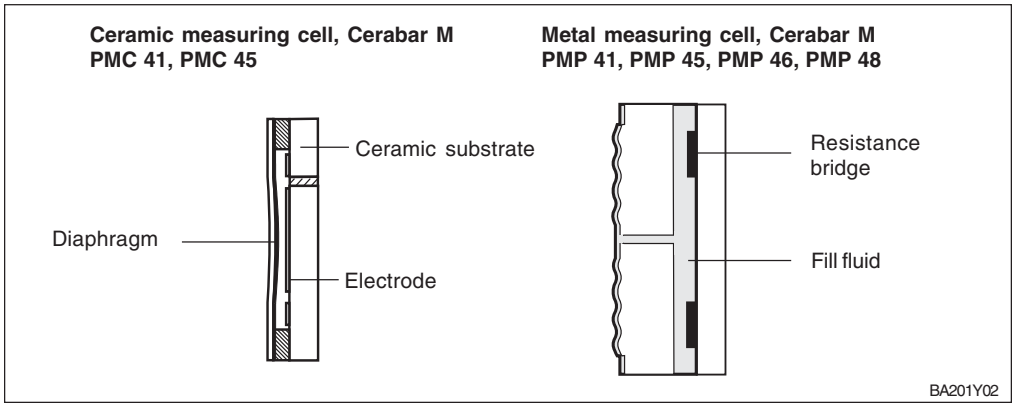

Figure 1.1
Structure of the measuring cell

Measuring system

The complete measuring system consists of:
- A Cerabar M pressure transmitter with current output 4 to 20 mA with superimposed digital signal (HART® protocol) and
- 11.5 to 45 VDC power supply for general purpose, 11.5 to 30 VDC for intrinsically safe

The measuring system can be operated by:
- A digital display for operating and indicating measured values on-site,
- The Universal HART® Communicator DXR 275 Handheld Terminal,
- An operating program, e.g. Commuwin II from Endress+Hauser.

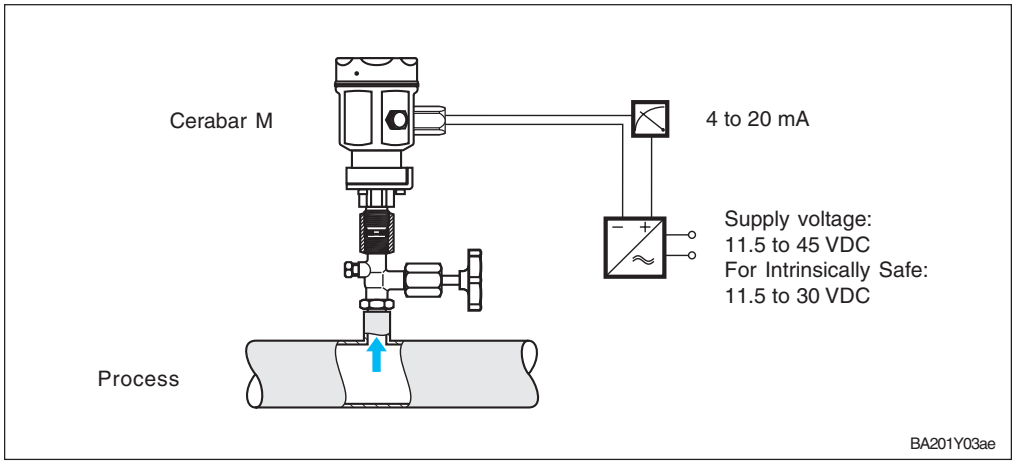

Figure 1.2
Measuring system

2 Installation

This chapter describes:
- The mechanical installation of Cerabar M with and without a diaphragm seal
- The electrical connection.

2.1 Installation instructions for PMC 41, PMC 45, PMP 41 and PMP 45

PMC 41, PMC 45, PMP 41, PMP 45 without diaphragm seal

The Cerabar M without a diaphragm seal is mounted in the same way as manometers. The use of shut-off valves and pigtails is recommended. The orientation depends upon the application.

- Measurement in gases:
  Mount on the shut-off valve above the tapping point.

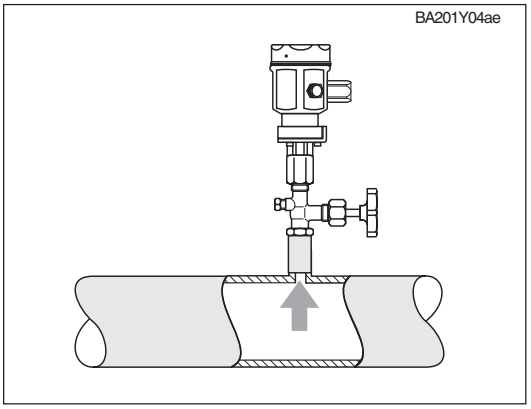

Figure 2.1
Mounting on shut-off valve for measuring in gases

- Measurement in vapor (steam)
  Mount with pigtail below the tapping point.
  The pigtail reduces the temperature in front of the diaphragm to almost ambient temperature. Before start-up, the pigtail must be filled with a fill fluid (e.g. water).

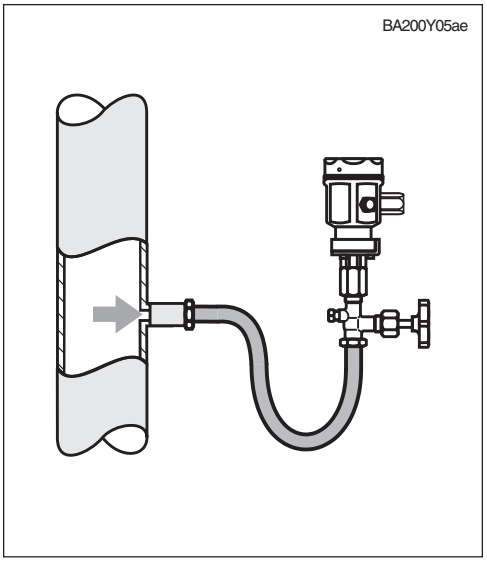

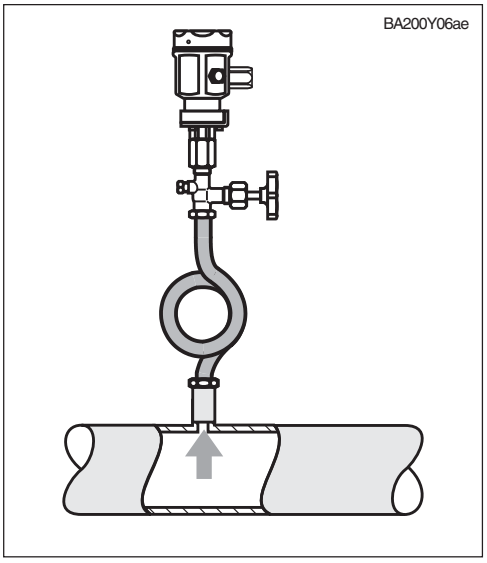

Figure 2.2
Left:
Mounting with U-shaped pigtail for measuring in vapor (steam)
Right:
Mounting with circular pigtail for measuring in vapor (steam)

- Measurement in liquids:
  Mount on the shut-off valve below the tapping point or at the same height.

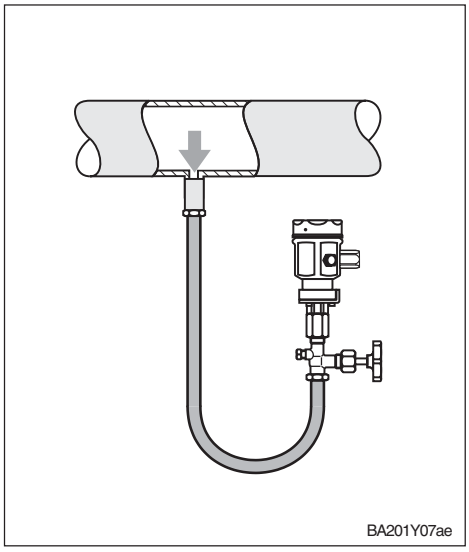

Figure 2.3
Mounting on shut-off valve for measuring in liquids

- Measurement of liquid level:
  Mount directly on the flush-weld tank shell using threaded clamp nut.

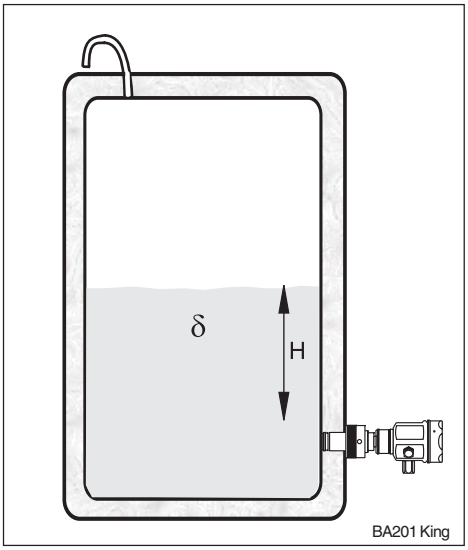

Figure 2.4
Mounting PMP 45 with King Gage® connection for measuring liquid level

2.2 Installation instructions for PMP 46 and PMP 48

PMP 46
PMP 48
with diaphragm seal

The Cerabar M with diaphragm seal is screwed in, flanged or clamped, depending on the type of diaphragm seal.

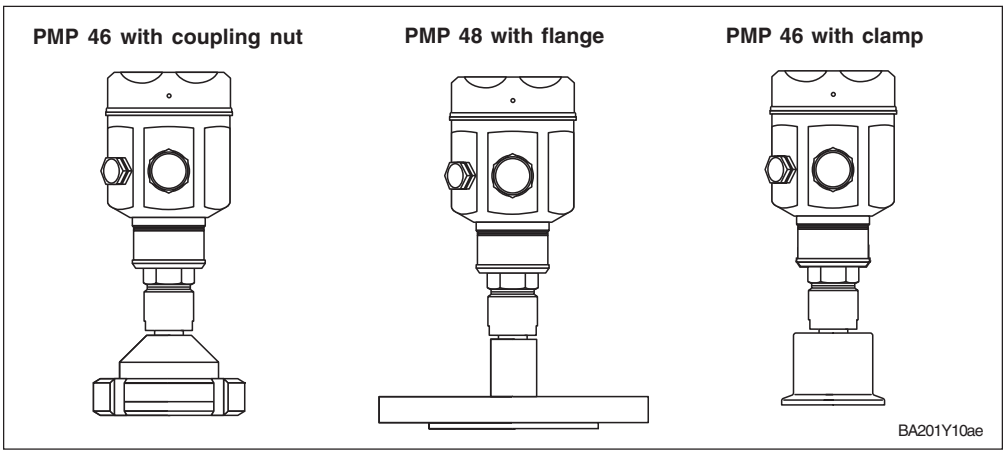

Figure 2.5
Diaphragm seal versions

- The protective cap of the diaphragm seal should only be removed just before installation in order to protect the diaphragm.
- The diaphragm of the diaphragm seal must not be dented or cleaned with pointed or hard objects.
- The diaphragm seal and the pressure sensor together form a closed, oil-filled calibrated system. The following rules should be observed:
  – The filling hole is sealed and is not to be opened.
  – The device should only be turned by the diaphragm seal at the point provided and not by the housing.

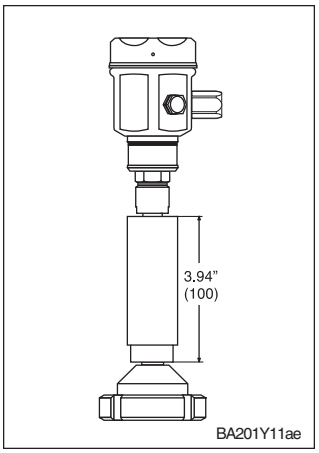

Figure 2.6
Mounting with temperature spacer

PMP 46, PMP 48
Mounting with temperature spacers

The use of temperature spacers is recommended for constant extreme product temperatures that can cause the maximum permissible ambient temperature of +185 °F (+85 °C) to be exceeded.

- Note when installing that the temperature spacer increases the maximum height by 3.94 inches (100 mm).
- Due to the water column in the temperature spacer, the increased height also causes a zero point shift of approx. 0.15 psi (10 mbar). See page 14 for adjustment.

PMP 46, PMP 48
Mounting with capillary tubing

To protect from extremely high temperatures (up to 662 °F / 350 °C medium temperature), moisture or vibration, or where the mounting location is not easily accessible, the housing of the Cerabar M can be mounted with a capillary tube to one side of the measuring point.

A bracket for mounting on a wall or pipe is available for this.

- Material: AISI 304SS
  Order No.: 52001402

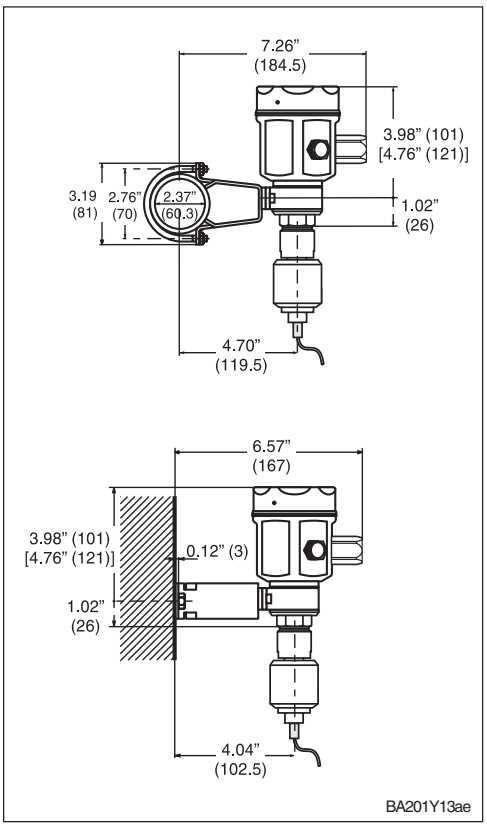

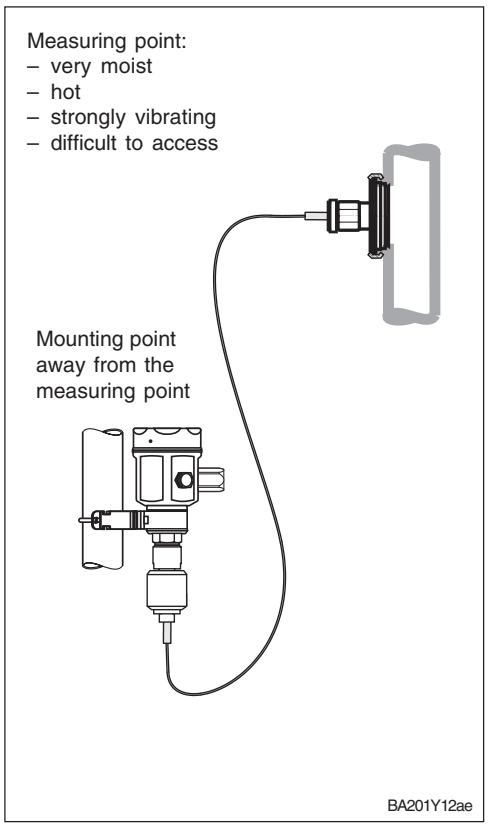

Figure 2.7
Left:
Mounting with bracket
Right:
Mounting with capillary tubing and bracket away from the measuring point.
Values in brackets [ ]apply to instruments with a raised cover.

2.3 Housing versions

- Stainless steel housing
  Type F 15, material 1.4404 (AISI 316L), surface roughness Ra < 0.8 µm.
- Aluminum housing
  Type F 18, material die-cast aluminum with powder coating on polyester base

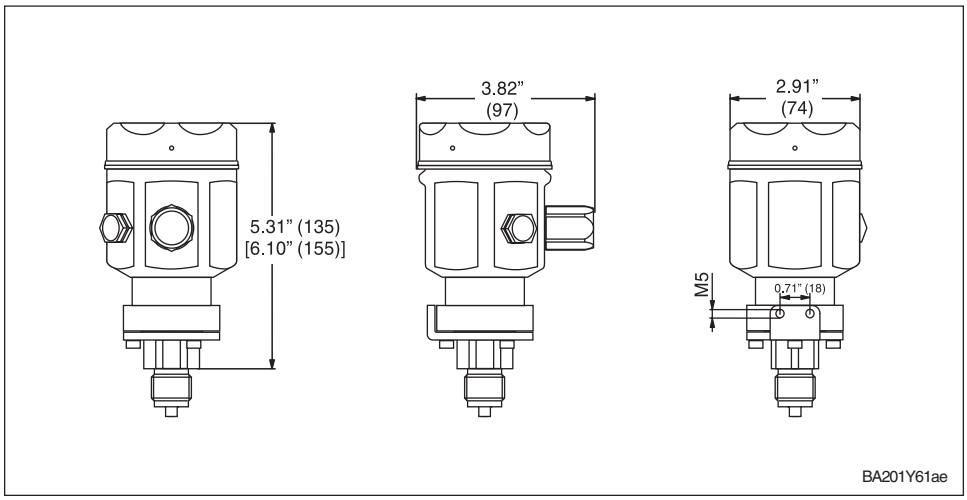

Figure 2.8
Cerabar M
with stainless steel housing.
Values in brackets [ ] apply to
devices with a raised cover.
All dimensions are in inches (mm).

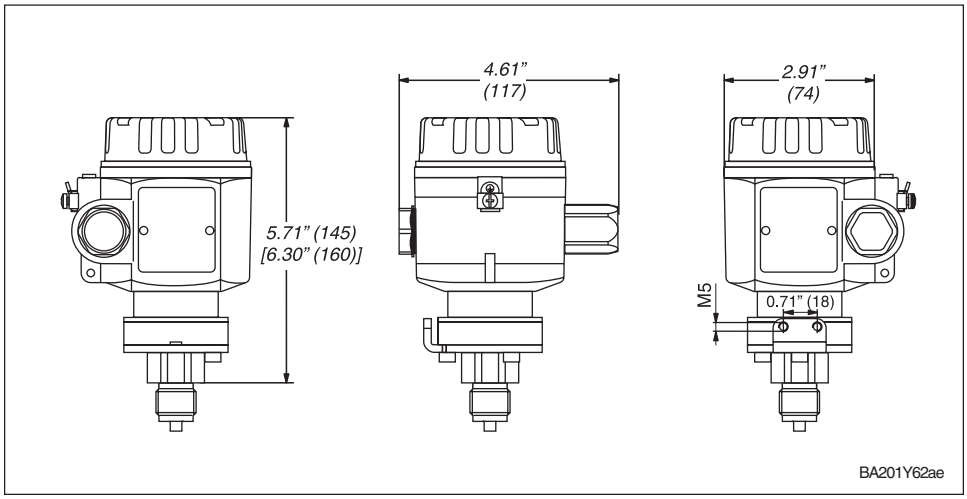

Figure 2.9
Cerabar M
with aluminum housing.
Values in brackets [ ] apply to
devices with a raised cover.
All dimensions are in inches (mm).

2.4 Mounting accessories

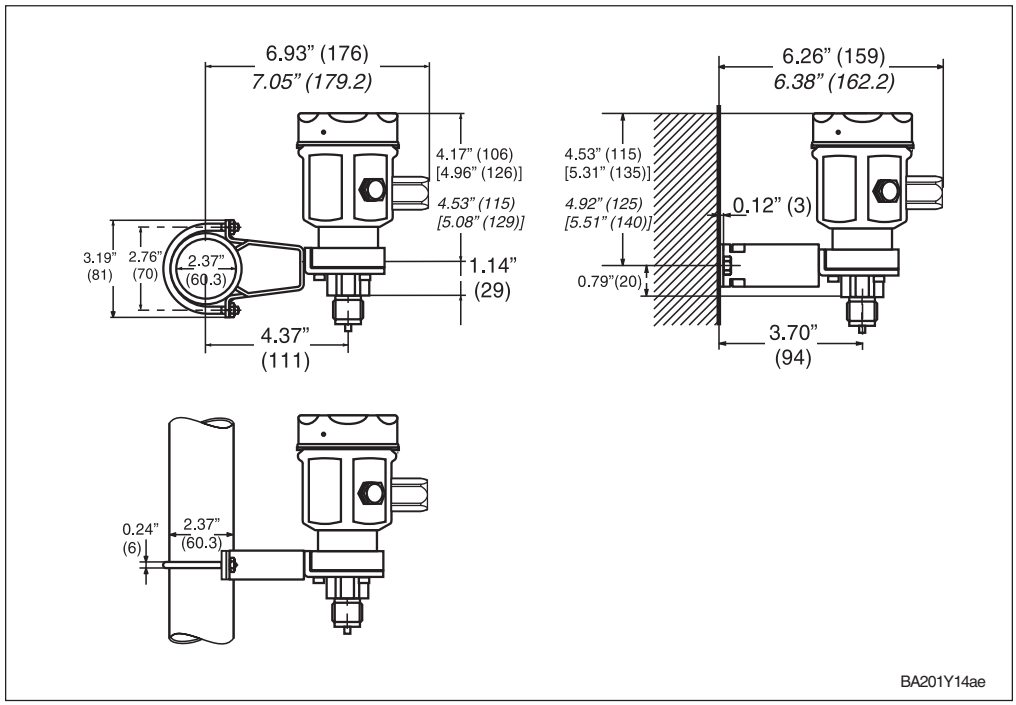

PMC 41
Wall and pipe mounting with mounting bracket

Figure 2.10
Mounting with bracket
Left: on a pipe
Right: on a wall

Values in brackets [ ] apply to devices with a raised cover.
Values in in italics apply to devices with an aluminum housing.
All dimensions are in inches (mm).

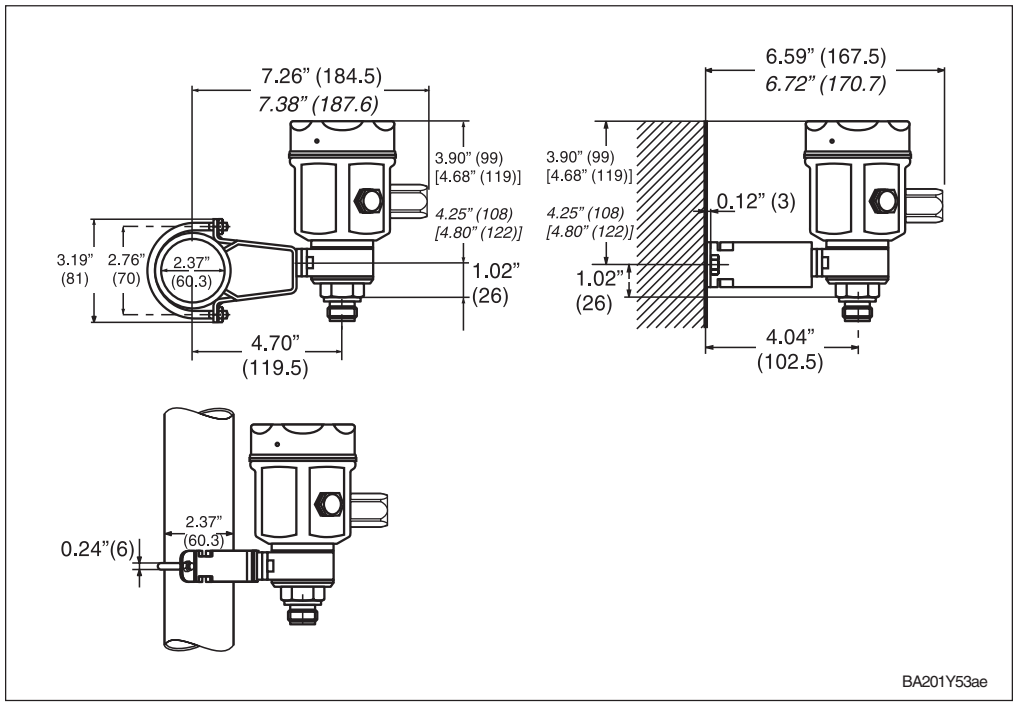

PMP 41
Wall and pipe mounting with mounting bracket

Figure 2.11
Mounting with bracket
Left: on a pipe
Right: on a wall

Values in brackets [ ] apply to devices with a raised cover.
Values in italics apply to devices with an aluminum housing.
All dimensions are in inches (mm).

2.5 Electrical connection

We recommend that you use shielded, twisted pair two-core cables as connecting wires. Max. wire diameter 14 gage AWG (2.5 mm²) permanently attached cable.
The supply voltage is:
- 11.5 to 45 VDC
- Intrinsically safe area: 11.5 to 30 VDC

Protective circuits against reverse polarity, HF influences and overvoltage peaks are installed (see also Technical Information TI 241F "EMC Test Principles").
A test signal can be taken via the appropriate terminal lugs without interrupting measurement.

Cable connection

- Unscrew the cover.
- If present, remove the retaining ring with analog display. To do so:
  – Push up the latch with the arrow until the grip of the retaining ring is audibly released.
  – Release the retaining ring carefully to prevent the display cables from breaking. The plug of the display can remain plugged in.
- Insert the cable through the cable entry.
- Connect cable cores in accordance with connection diagram.
- Where appropriate, re-mount the retaining ring with digital display. The grip of the retaining ring clips in with an audible click.
- Screw down the cover.

Observe national regulations for applications in hazardous areas.

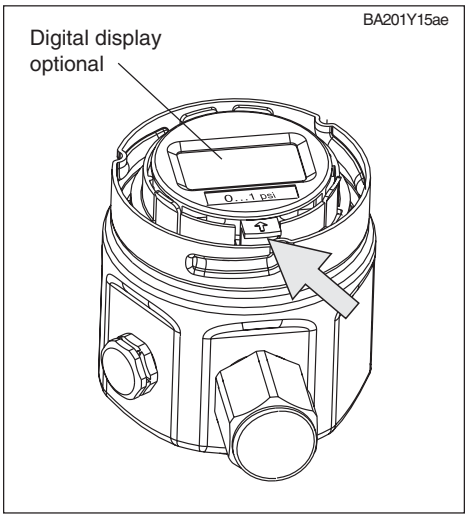

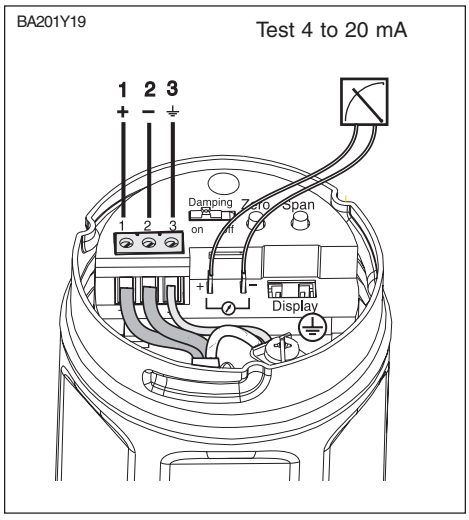

Figure 2.12
Left:
Removing cover and retaining ring with digital display:
To release the retaining ring from the electronic insert, push latch with arrow upwards.
Right: Connection diagram

Note!

Note!
Terminal 3 on the electronic insert is for grounding and is already wired internally. If the connecting cable also has a shield or ground cable, this must be connected to the internal ground terminal of the housing, not to Terminal 3 (see circuit diagram).

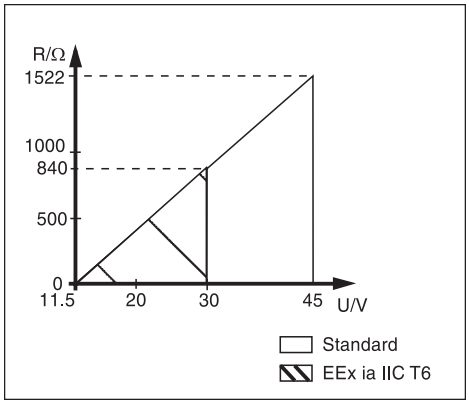

Figure 2.13
Load diagram

M12 plug

Use M12 plugs in degree of protection NEMA 6P (IP 68) for hygienic applications or for moist operating locations. Endress+Hauser offers a plug socket for self-made connections (Order No. 52006263).

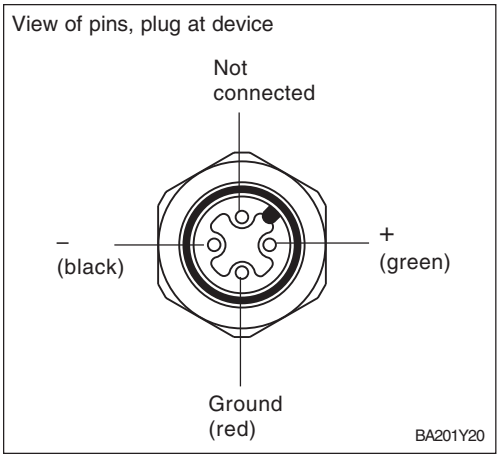

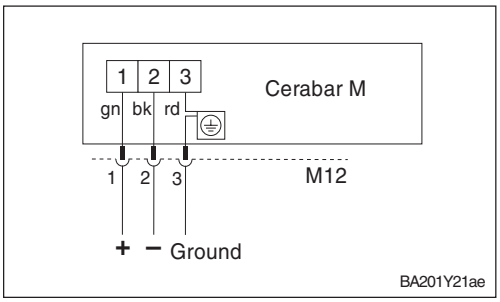

Versions:
- PM ❑ 4❑ – ❑ L1 ❑❑ ❑ H ❑ ❑❑ ❑
- PM ❑ 4❑ – ❑ L1 ❑❑ ❑ J ❑ ❑❑ ❑
- PM ❑ 4❑ – ❑ L2 ❑❑ ❑ H ❑ ❑❑ ❑
- PM ❑ 4❑ – ❑ L2 ❑❑ ❑ J ❑ ❑❑ ❑

Note!

The cover of the stainless steel housing is slightly greased at the factory to make sure that it is easily screwed on and off. Endress+Hauser recommends you regrease the sealing surfaces occasionally. When doing so, however, make sure that the grease does not penetrate the sealing groove of the housing.

DXR 275 Handheld terminal connection

- Do not change the DXR 275 handheld terminal's battery in hazardous areas.
- The following applies to a Cerabar M with FM or CSA certificate: Electrical connection in accordance with "Control drawing" (enclosed in the Cerabar M's packaging).
- To transfer the communication signal without errors, there must be a communication resistance of at least 250 Ω between the connection points and the power supply.

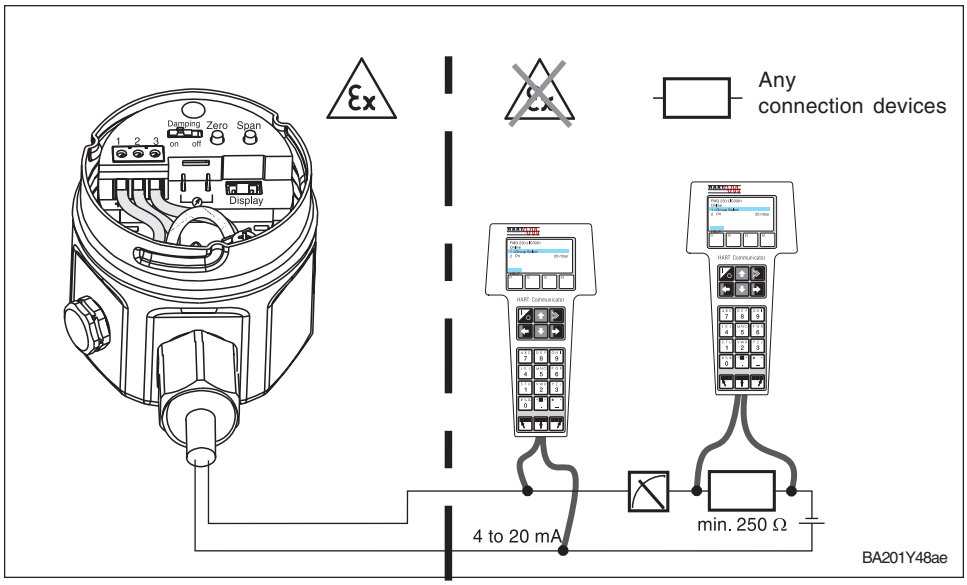

Figure 2.14
The handheld terminal can be connected anywhere along the 4 to 20 mA cable.
Use intrinsically safe voltage source in intrinsically safe area (e.g. RN 221N)

Commubox FXA 191 connection for operation via Commuwin II

The Commubox FXA 191 connects the Cerabar M with HART® protocol to the RS 232 C serial interface of a Personal Computer. This makes it possible to operate the Cerabar M remotely using the Endress+Hauser operating matrix. The Commubox FXA 191 is suitable for use in intrinsically safe signal circuits.

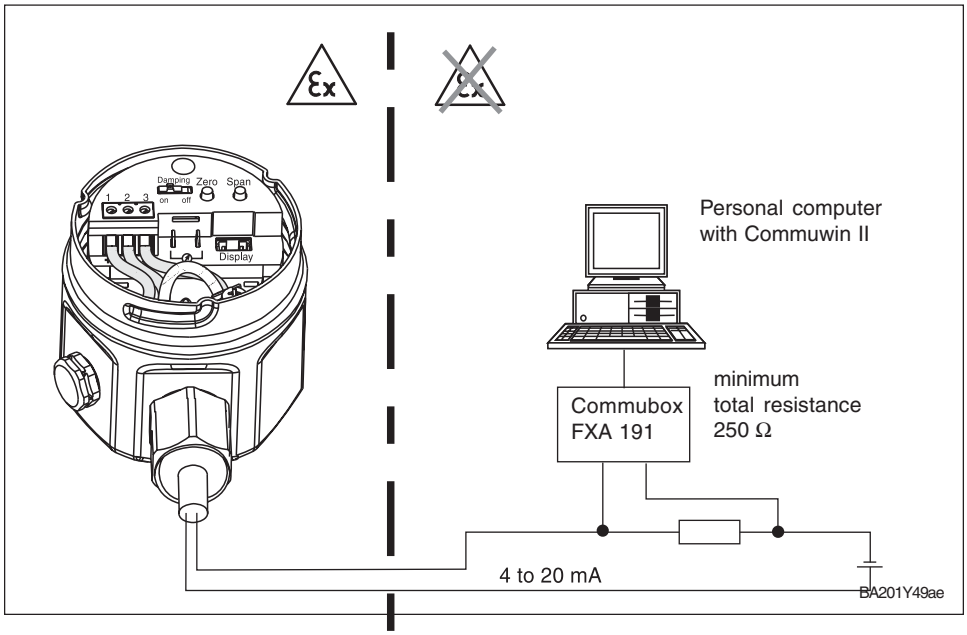

Figure 2.15
The Commubox can be connected anywhere along the 4 to 20 mA cable.

3 Operation

Contents

This chapter describes:
- Mounting the digital display (optional)
- Function of the digital display (optional)
- Position and function of the operating elements on the electronic insert
- Operating via Commuwin II
- Operating via Universal HART® Communicator DXR 275

3.1 Access to the operating elements

Lifting digital display (optional)

The digital display is delivered already mounted when it is ordered with the device. In this case the digital display must be released from the electronic insert with the retaining ring before operating.
If you want to order a digital display (order no. 52002644) at a later date, then please observe the instructions in Chapter 6.6 “Mounting the digital display”.

Releasing the display:
- Push up the latch with the arrow until the grip of the retaining ring on the electronic insert is audibly released.
- Release the retaining ring and lift off carefully to prevent the display cables from breaking.
- For reading the display value during operation, attach the digital display to the edge of the housing or let it hand down loosely by its cable next to the housing.

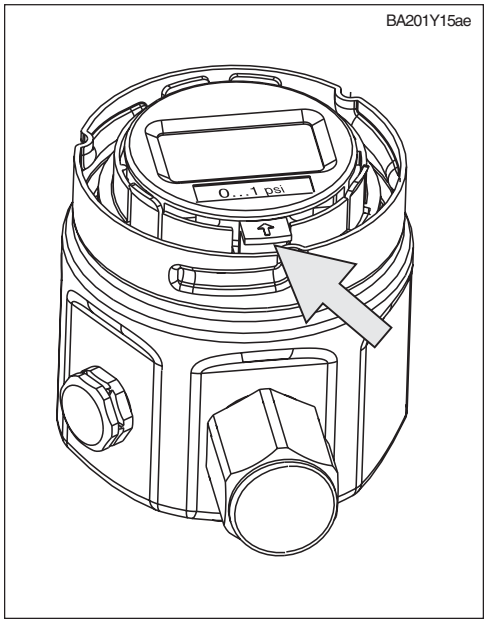

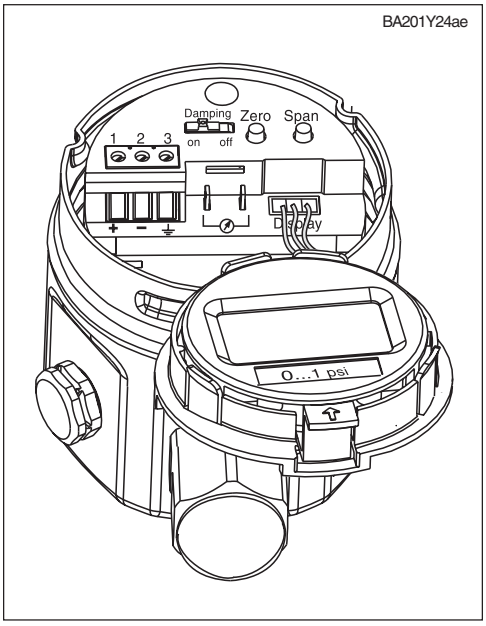

Figure 3.1
Left:
To release the retaining ring, push latch with arrow upwards.
Right:
Lift off retaining ring with display for operation.

3.2 Function of the display

The digital display (optional has two display modes:
- Display in measurement mode: This is shown as standard
- Display in calibration mode: This is shown after pressing the Zero or Span key once. It returns automatically to measurement mode display after 2 seconds.

Figure 3.2
Function of the display

Display in measurement mode
① 4-digit display of measured values and input parameters
② Bar graph of measured value
③ Lower range value
④ Upper range value
⑤ Nominal measuring range:

Additional display in calibration mode
⑥ Displays the calibration point (Z=Zero or S=Span)
⑦ of the set measuring range within the measurement limits

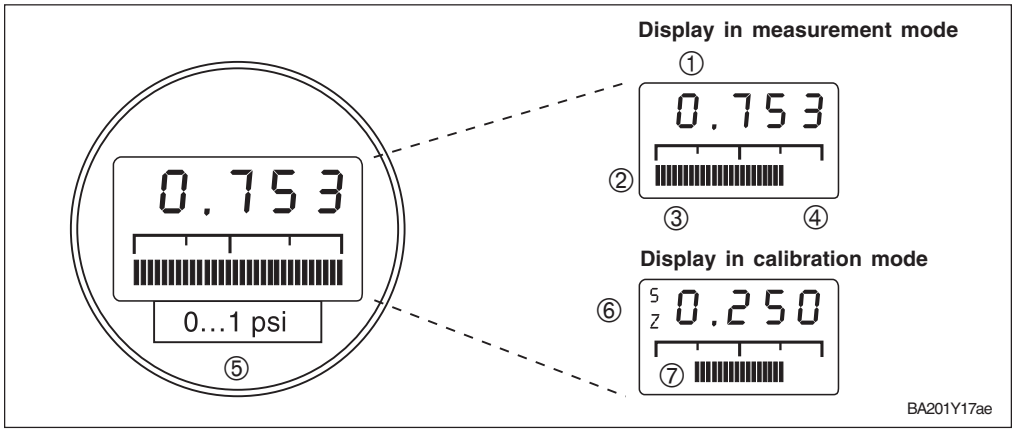

3.3 Position and function of the operating elements on the electronic insert

Position of the operating elements

Figure 3.3
Position of the operating elements

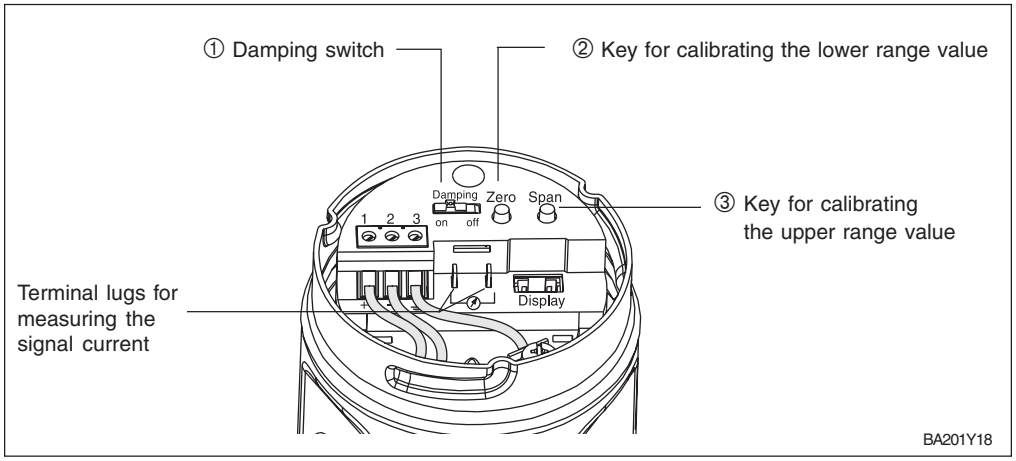

Function of the operating elements

No.	Operating element	Function
①	Damping switch	Switch position "off": Damping 0 s Switch position "on": Damping 2 s It is possible to enter a damping value between 0 and 40 s via communication.
②	Key for lower range value	The value currently saved for the lower range value e.g. 4 mA (zero point) is displayed and the acting pressure is taken as the lower range value.
③	Key for upper range value	The value currently saved for the upper range value e.g. 20 mA is displayed and the acting pressure is taken as the upper range value.
②+③	Bias key combination: Key for lower range value and key for upper range value	The value currently saved for the bias pressure is displayed and the acting pressure is taken as the bias pressure.
②+③	Reset key combination: Key for lower range value and key for upper range value	The reset is activated when both keys are held down for at least 7 s.

3.4 Operating via Commuwin II

With the Commuwin II display and operating program, Cerabar M can be calibrated and operated as follows:

- Via matrix operation or
- graphic operation

For this, the corresponding server (e.g. HART® or ZA 672) must be activated. For a description of the Commuwin II operating program, see Operating Instructions BA 124F.

Operating matrix

In this operating mode in the device parameters menu, you can access advanced Cerabar M functions.
- Each row is assigned to a function group.
- Every field represents a parameter.

Enter the setting parameters in the appropriate fields.

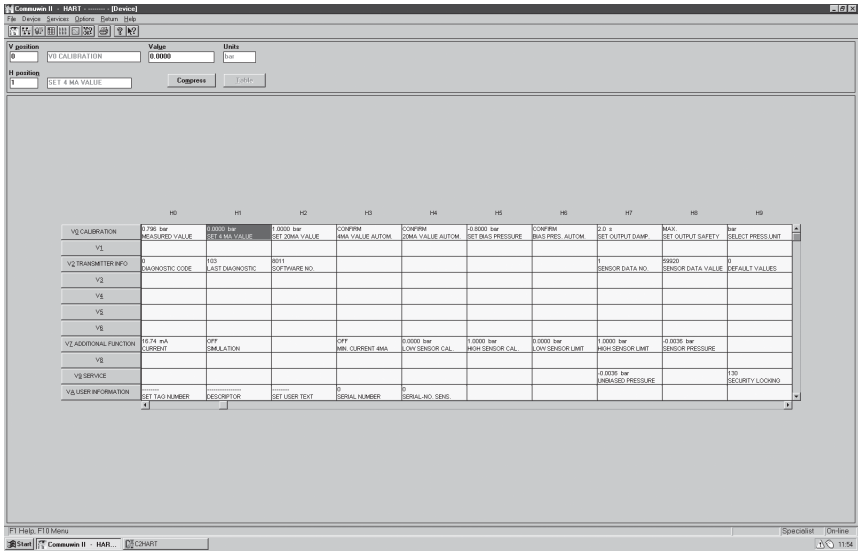

BA201E01

Figure 3.4
Device data menu in Commuwin II

Graphic operation

In this operating mode, enter the setting parameters for defined configuration procedures in the corresponding boxes.

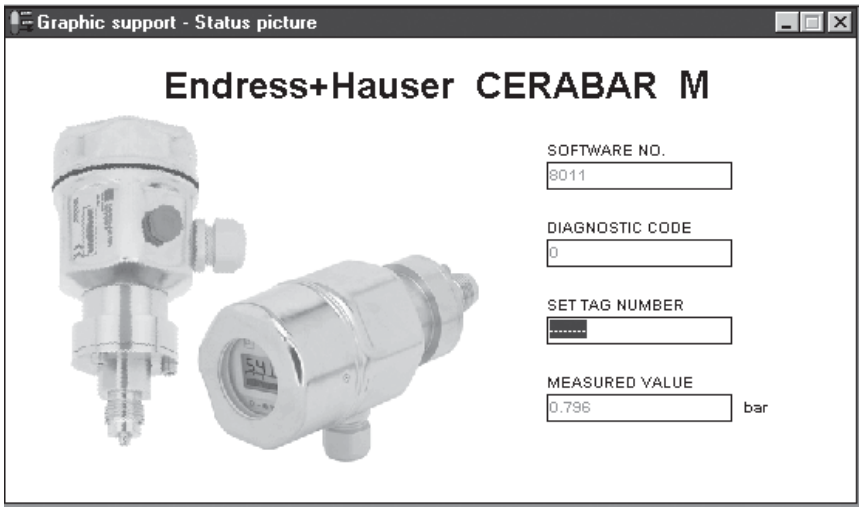

BA201E02

Figure 3.5
Device data menu in Commuwin II

3.5 Operating via Universal HART® Communicator DXR 275

When operating via HART® protocol, a menu control system derived from the matrix is used (see also Operating Instructions for the handheld terminal).

- The “Select group” menu calls up the matrix.
- The menu headers are displayed.
- The parameters are set via sub-menus.

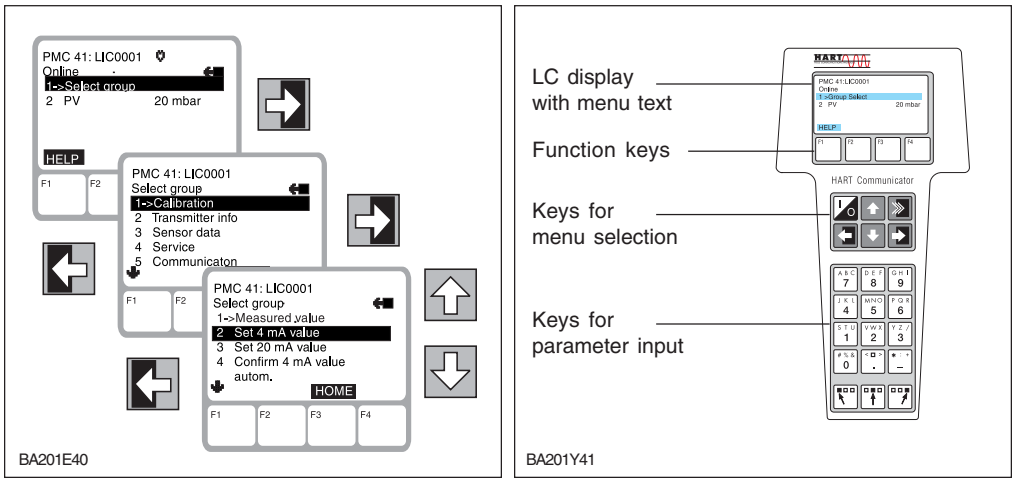

Figure 3.6
Left:
Menu control with the DXR 275
Right:
Universal HART® Communicator DXR 275 Handheld Terminal

The electrical connection of the Universal HART® Communicator DXR 275 handheld terminal is described in Chapter 2.5, the step-by-step commissioning of the measuring point in Chapter 4.

4 Commissioning

Contents

This chapter describes:
- On-site commissioning using keys on the electronic insert
- Commissioning and operation via communication (Universal HART® Communicator DXR 275 handheld terminal or Commuwin II)
- Locking and unlocking the measuring point
- Measuring point information

4.1 On-site commissioning

Preparatory work

- Connect the Cerabar M electrically (Chapter 2.5 “Electrical connection”).
- Ensure that a pressure can be generated within the required measuring range.
- If you have not installed a digital display, then connect a multimeter (4 to 20 mA) to the appropriate terminal lugs.
- If you have installed a digital display, the calibration values appear there.

Damping

The damping t affects the speed with which the output signal and the digital display react to changes in pressure.
The damping is set via a switch on the electronic insert.

- Switch position off: Damping 0 s
- Switch position on: Damping 2 s

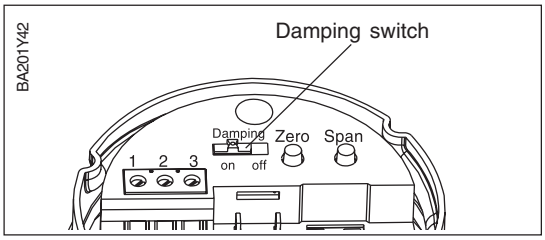

Figure 4.1
Position of the damping switch

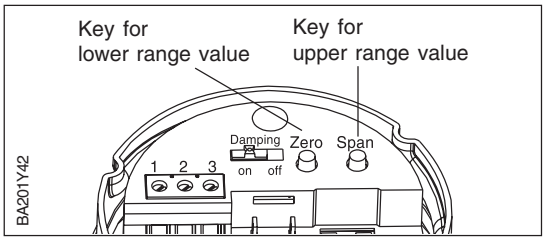

Figure 4.2
Position of keys for calibrating lower and upper range value

Calibrating lower range value

Use the “Zero” key to call up the lower range value currently saved or to calibrate the upper range value.

* Digital display optional

- Calling-up lower range value:
  Press the “Zero” key. The current calibration value appears in the digital display* and remains there for approx. 2 s after releasing the key.
- Calibrating lower range value:
  1. Specify the exact pressure for the lower range value (zero point).
  2. Press the “Zero” key. The calibration value currently saved appears in the digital display*.
  3. Release the key and press the key a second time within approx. 2 s. Hold down the key for 3 to 4 seconds until the “Z” symbol* stops flashing. The available pressure is now adopted as the new lower range value.

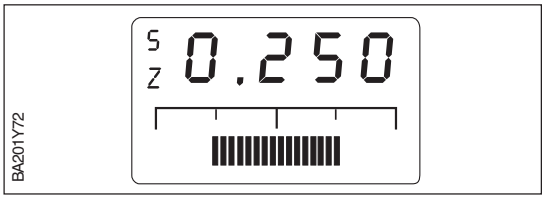

Figure 4.3
Digital display: Left, the “S” and the “Z” symbol

Calibrating upper range value
*Digital display optional

Use the “Span” key to calibrate the upper range value:
1. Specify the exact pressure for the upper range value.
2. Press the “Span” key. The calibration value appears in the digital display*.
3. Release the key and press the key a second time within 2 s. Hold down the key for 3 to 4 seconds until the “S” symbol* stops flashing. The available pressure is now adopted as the new upper range value.

Position calibration - only display (bias pressure)
*Digital display optional

If the display does not show zero after calibrating the lower range value at zero operating pressure (position-dependent), it can be corrected to zero by adopting the available bias pressure (position calibration).

The bias pressure is calibrated using the Zero and Span keys:

1. Press the Zero and Span keys simultaneously. The bias pressure currently saved appears in the digital display*.
2. Release the keys and press them a second time within 2 seconds. Hold down the keys until the “Z” and the “S” symbols* stop flashing.
   The available pressure is now adopted as the new bias pressure.

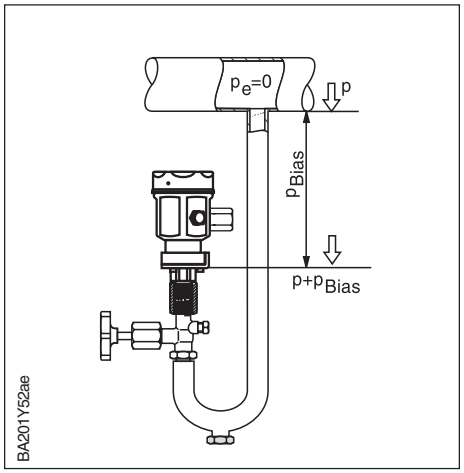

Note!

Note!
Do not hold Zero and Span down for longer than 6 seconds, otherwise the system resets – see next section.

Resetting to factory settings (reset)

Use the Zero and Span keys to reset to the factory setting:
– to the lower range value (Zero) = lower sensor measuring limit
– to the upper range value (Span) = upper sensor measuring limit
– the bias pressure to zero = 0.0 pressure unit

1. Press the Zero and Span keys simultaneously.
2. Release the keys, press them a second time within 2 seconds and hold them for at least 7 seconds. A completed reset is confirmed on the digital display (optional) with “Res”.

4.2 Commissioning and operation using communication

Preparatory work

- Connect the Cerabar M electrically (Chapter 2.5 “Electrical connection”).
- Decide which tool you want to use to operate the Cerabar M and make the connection. (Commuwin II see Chapter 3.4, Universal HART® Communicator DXR 275 see Chapter 3.5).

Resetting to factory setting (Reset)

By entering a certain code, the entries in the matrix are reset partially or completely to the factory settings. Further information on the various types of reset and their effects is given in Chapter 5.3 “Reset”.

#	Matrix	Route through the menus	Input
Main group: Transmitter Information			
1	Resetting to factory setting (Reset)		
	V2H9	➤ Default Values	e.g. 2380 Enter

Damping

The damping t affects the speed with which the output signal and the digital display react to changes in pressure.
To set the damping using the handheld terminal, the damping switch on the electronic insert must be “on”. With the handheld terminal, values between 0 and 40 seconds can be selected for the damping.

#	Matrix	Route through the menus	Input
1	Move damping switch to “on”		
Main group: Basic calibration			
2	Suppression of measured value fluctuations		
	V0H7	➤ Vapor output τ = 0 - 40 s	e.g. 20 s Enter

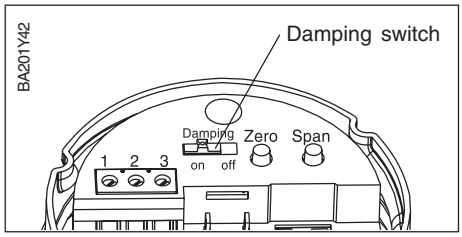

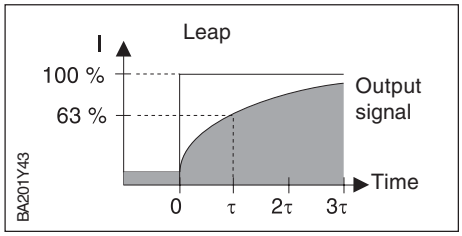

Selecting pressure unit

By selecting the pressure unit you define in which unit the pressure-specific parameters are displayed. The pressure units in the table below can be selected. After selecting a new pressure unit, all entries for pressure are recalculated to the new unit, e.g. 0 - 1 bar = 0 - 14.5 psi.

#	Matrix	Route through the menus	Input
Main group: Basic calibration			
1	Selecting pressure unit		
	V0H9	➤ Select pressure unit	e.g. psi Enter

Units	Units	Units	Units	Units
mbar	kPa	in H_2O	kg / cm^2	Torr
bar	MPa	ft H_2O	kgf / cm^2	mm Hg
Pa	mm H_2O	psi	atm	in Hg
hPa	m H_2O	g / cm^2	lb / ft^2	

Lower and upper range values: Setting without reference pressure

The desired pressure for the lower range value (zero point) and the upper range value is set using the handheld terminal without specifying a reference pressure.

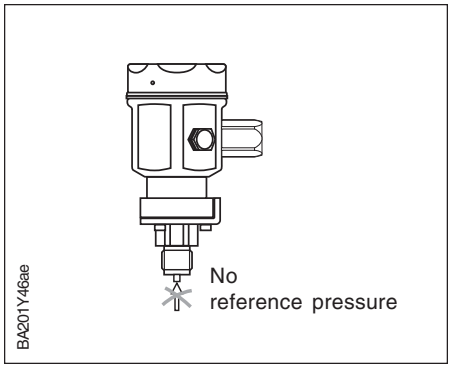

#	Matrix	Route through the menus	Input
Main group: Basic calibration			
1	Enter known pressure for the lower range value		
	V0H1	➤ Set 4 mA	e.g. 0 psi Enter
2	Enter known pressure for the upper range value		
	V0H2	➤ Set 20 mA	e.g. 14.5 psi Enter

Lower and upper range values: Calibration with reference pressure

A reference pressure is available which corresponds exactly to the desired lower range value (zero point) and the desired upper range value.

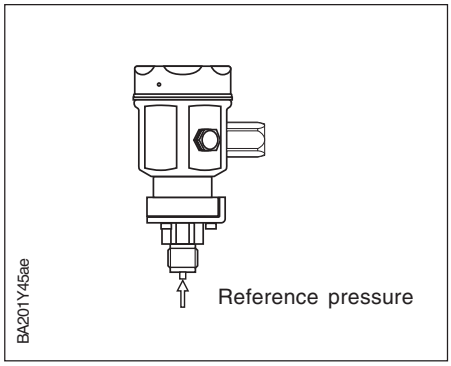

#	Matrix	Route through the menus	Input
Main group: Basic calibration			
1	Adopt available pressure as the lower range value		
	V0H3	➤ Confirm 4 mA automatically	e.g. 0 psi Enter
2	Adopt available pressure as the upper range value		
	V0H4	➤ Confirm 20 mA automatically	e.g. 14.5 psi Enter

Position calibration - only display (bias pressure)

If the display does not show zero after calibrating the zero point at zero operating pressure (position-dependent), the display value can be corrected to zero by entering or adopting a bias pressure (position calibration).

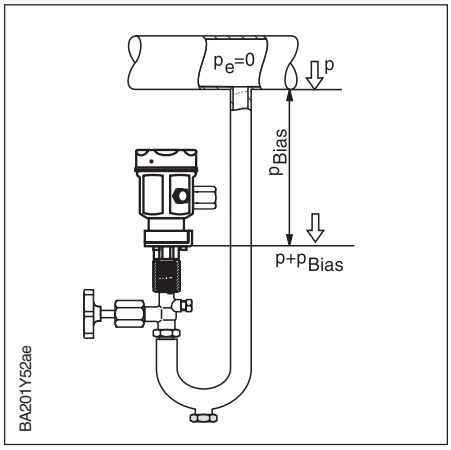

#	Matrix	Route through the menus	Input
Main group: Basic calibration			
1	Set display to zero by entering a known bias pressure (position-dependent pressure).		
	V0H5	➤ Set bias pressure	e.g. 5 psi Enter

alternative

2	Set display to zero An available bias pressure (position-dependent pressure) is adopted as zero pressure.		
	V0H6	➤ Confirm bias pressure automatically	Enter

4 mA threshold (current output min. 4 mA)

The signal current in uninterrupted operation is set to 3.8 to 20.5 mA as standard. Selecting the 4 mA threshold guarantees that a minimum signal current does not fall below 4 mA.

#	Matrix	Route through the menus	Input
Main group: Sensor data			
1	V7H3	➤ Off Current output min. 4 mA	e.g. On Enter

Output with error

To signal an error, an error code with the measured value is transmitted.
The bar graph in the digital display also takes in the value you have selected. The following values can be selected:

- MIN: 3.6 mA
- MAX: 22 mA
- CONTINUE: continue measurement

#	Matrix	Route through the menus	Input
Main group: Basic calibration			
1	Selecting output with error		
	V0H8	➤ Select safety	e.g. MAX. Enter

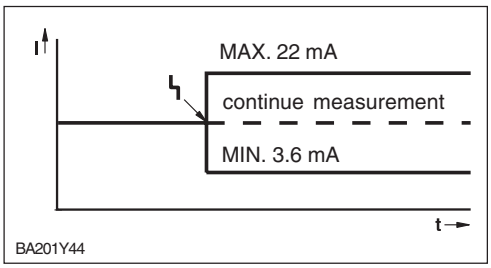

4.3 Locking/unlocking the operation

After calibration or after entering all parameters, operation can be locked using a three-digit code number other than 130. This locks all fields and functions except V9H9 “Security locking”. Entering 130 deactivates the locking.

#	Matrix	Route through the menus	Input
Main group: Service			
1	Lock operation		
	V9H9	➤ Security locking	e.g. 131 Enter

2	Deactivate security locking		
	V9H9	➤ Security locking	130 Enter

4.4 Information on measuring point

The following information on the measuring point can be called up with the handheld terminal or using Commuwin II:

Matrix field	Display or entry
Measured values	
V0H0	Main measured value for pressure
V7H0	Current display: Present current in mA
V7H8	Sensor pressure (unit selectable in V0H9)
V9H7	Current damped pressure without bias correction
Sensor data	
V7H4	Lower calibration pressure
V7H5	Upper calibration pressure
V7H6	Lower range limit of sensor (unit selectable in V0H9)
V7H7	Upper range limit of sensor (unit selectable in V0H9)
Information on transmitter	
V2H2	8011/8012 = Software number
V2H7	Sensor data no.: Number of the entry in the sensor table (1 - 10), please refer to sensor pass
V2H8	Sensor data value: Entry in the sensor table, contains all sensor-specific data, please refer to sensor pass
Error response	
V2H0	Diagnostic code
V2H1	Last diagnostic code

Communication layer

Matrix field	Display
VAH0	Measuring point designation. Here you can name the measuring point using max. 8 characters.
VAH1	System identification (Descriptor) Here you can enter max. 16 characters.
VAH2	User text Here you can enter max. 8 characters.
VAH3	Device serial number
VAH4	Sensor serial number

5 Diagnosis and Troubleshooting

5.1 Diagnosis of errors and warnings

Errors

If the Cerabar M detects an error, the following occurs:
- an error code is generated and flashes on the digital display,
- when the digital display is connected, the bar graph accepts the selected value for the error message (MIN, MAX, CONTINUE),
- the display value and the bar graph flash,
- transmitter information can be read in the main group or error codes can be read in matrix fields V2H0 and V2H1.

Warnings

If the Cerabar M detects a warning, the following occurs:
- an error code is generated: the Cerabar M continues measuring
- the scale flashes when the digital display is connected,
- transmitter information can be read in the main group or error codes can be read in matrix fields V2H0 and V2H1.

Error codes in V2H0 and V2H1

If several errors occur simultaneously, the sequence in which they are displayed corresponds to their order of priority.

Code	Type	Reason and remedial measures	Priority
E 101	Error	Sensor table check sum error – is shown when sensor data is being entered. *The error message disappears when the sensor data is entered correctly and in full.* – Check sum is incorrect *Check sensor data - see Sensor data "parameters no." (V2H7) and "Sensor Data Value" (V2H8). See also Chapter 6.6 Section "Entering sensor data"*	2
E 103	Error	Initialization active – The electronics are initialized when the device is connected. *Wait for initialization procedure*	1
E 104	Warning	Sensor calibration – Values in V7H4 and V7H5 (Low Sensor Cal and High Sensor Cal) are too close to each other e.g. after sensor recalibration – *Carry out reset (Code 2380), recalibrate sensor*	8
E 106	Error	Up/download active – *Wait for download*	5
E 115	Error	Sensor gauge pressure – Gauge pressure present. *Decrease pressure until message disappears.* – Sensor - electronic insert cable connection interrupted. *Check cable connection.* – Sensor defective, *Replace sensor*	3
E 116	Error	Download error (PC - Transmitter) – During download, the data is incorrectly transmitted to the processor, e.g. due to open cable connections, voltage peaks (ripples) on the supply voltage, EMC effects. *Check the PC - transmitter cable connection. Carry out reset "5140".* *Start download again.*	6
E 120	Error	Sensor underpressure – Pressure too low. *Increase pressure until message disappears.* – Sensor - electronic insert cable connection interrupted. *Check cable connection.* – Sensor defective. *Replace sensor.*	4
E 613	Warning	Current simulation active – Stays until simulation is completed - see also Chapter 5.2	7
E 620	Warning	Measured value outside of lower/upper range value	9

5.2 Current simulation

If the function or certain reactions of connected switching units need to be checked, a signal current independent of the available operating pressure can be simulated.

#	Matrix	Route through the menus	Input
Main group: Additional functions			
1	V7H1	➤ Simulation	ON
2	V7H2	➤ Simulate current	e.g. 22 mA

5.3 Reset

Reset via local operation

Use the Zero and Span keys to reset to the factory setting:
– to the lower range value (Zero) = lower sensor measuring limit
– to the upper range value (Span) = upper sensor measuring limit
– the bias pressure to zero = 0.0 pressure unit

1. Press the Zero and Span keys simultaneously.
2. Release the keys, press them a second time within 2 seconds and hold them for at least 7 seconds. A completed reset is confirmed on the digital display (optional) with “Res”.

Reset via communication

By entering a certain code, the entries in the matrix fields are reset partially or completely to the factory settings.

#	Matrix	Route through the menus	Input
Main group: Transmitter Information			
1	V2H9	➤ Factory settings	e.g. 2380

The Cerabar M differentiates between different reset code numbers with different effects. See the table on the next page to find out which parameters are reset by reset code numbers 5140, 2380, 2509 or 731.

Table of parameters that can be reset by the reset code numbers.

Reset via communication (continued)

	H0	H1	H2	H3	H4	H5	H6	H7	H8	H9
V0	**Measured value**	**Set 4 mA**	**Set 20 mA**	**4 mA automat.**	**20 mA automat.**	**Set Bias pressure**	**Bias pressure automat.**	**Set Output Damping**	**Select safety**	**Pressure unit**
5140		= V7H6	= V7H7	deleted	deleted	0.0	deleted	0.0	max.	bar
2380		= V7H6	= V7H7	deleted	deleted	0.0	deleted	0.0	max.	
2509										
731		=V7H6	=V7H7	deleted	deleted	0.0	deleted	0.0	max.	
V2	**Diagnostic code**	**Last Diag. code**	**Software-No.**							
5140		0								
2380										
2509										
731										
V3...V6										
V7	**Current display**	**Simulation**	**Simulation current**	**Current min. 4 mA**	**Low Sen. Calibration**	**High Sen. Calibration**	**Lower measuring limit**	**Upper measuring limit**	**Sensor pressure**	
5140		Off	deleted	Off	= V7H6	= V7H7				
2380				Off	= V7H6	= V7H7				
2509										
731				Off						
V8										
V9							**Pressure before Bias corr.**			**Security locking**
5140										130
2380										
2509										
731										
VA	**Measuring point**	**System identificat**	**User text**	**Serial number**	**Serial no. Sensor**					
5140	deleted	deleted	deleted							
2380	deleted	deleted								
2509										
731										

6 Maintenance and Repair

6.1 Maintenance

In general, no special maintenance is required on the Cerabar M.

Cleaning

In general, the pressure sensor must neither be cleaned nor cleared of material buildup. Buildup has no effect on the measurement result as long as it is porous and does not present a mechanical load on the diaphragm of the pressure sensor. The cleaning agent used should not corrode the surfaces and seals. Avoid mechanical damage to the diaphragm.

Note!
Measuring errors may occur over a short period within the framework of cleaning processes with strong temperature deviations.

6.2 Repair

The Endress+Hauser repairs concept provides for measuring devices to have a modular design and the customer may carry out repairs.
Chapter 6.5 contains all the spare parts listed with their order numbers. You can order them from Endress+Hauser for repairs on your Cerabar M. As far as necessary, the spare parts also include replacement instructions.

Note!
For ex-certified devices, please refer to Chapter 6.4 “Repair of Ex-certified devices”.
For more information on service and spare parts contact Endress+Hauser Service.

6.3 Returning for repair

If you have to return the Cerabar M to Endress+Hauser for repair, please follow the Return Authorization Policy at the back of this manual so that we have the following information:
- A description of the application.
- The chemical and physical properties of the product with which the device came into contact.
- A brief description of the error.

Before sending in the Cerabar M to Endress+Hauser for repair, please take the following protective measures:
- Remove all traces of the product.
  This is particularly important if the product is dangerous to health.
- We request that no device be returned to Endress+Hauser without all dangerous material having first been completely removed.

Note!
Devices with certificates of conformity or design approval must be sent in for repair as complete units only.

6.4 Repair of Ex-certified devices

Warning!
When repairing Ex-certified devices, please not the following:

- Only specialist personnel or Endress+Hauser may undertake repairs to certified devices.
- Relevant standards, national hazardous area regulations and safety instructions (XA...) and certificates must be observed.
- Only genuine Endress+Hauser spare parts may be used.
- When ordering spare parts, please check the device designation on the nameplate.
  Identical parts may only be used as replacements.
- Electronic inserts or sensors already in use in a standard device may not be used as spare parts for a certified device.
- Carry out repairs according to the instructions. After repairs, the device must fulfil the requirements of the specified individual tests.
- A certified device may only be converted into another certified variant by Endress+Hauser.
- All repairs and modifications must be documented.

For more information on service and spare parts, contact Endress+Hauser Service.

6.5 Spare parts

The diagrams on the following pages show all the Cerabar M spare parts which can be ordered from Endress+Hauser.
When ordering spare parts, please not the following:

- When replacing parts that are defined by the order code (e.g. PM❑ 4❑ - ❑❑❑❑❑❑ J ❑ ❑❑ ❑ = Cerabar M with Smart electronics and digital display), you must check whether the device designation on the nameplate is still valid.
- Only the process connection of the PMC 41, PMP 41 and PMC 45 models can be exchanged by the customer. For all other versions, the process connection ordered is supplied with the complete housing, but without the electronic insert.
- If a new sensor is ordered as a spare part, the completely mounted device is generally supplied with housing and process connection, but without the electronic insert.
- If the device designation on the nameplate is changed because of a spare part, a modified nameplate must also be ordered. Information on the new device must be entered on the modified nameplate and the nameplate must then be secured to the Cerabar M's housing.
- An Ex-certified device may not be modified or converted. The device designation specified on the nameplate must still be applicable after a repair.
- It is not possible to convert a standard device into an Ex system by replacing its parts. The appropriate regulations are to be observed when certified devices are being repaired.

Electronic spare parts for Cerabar M with stainless steel housing

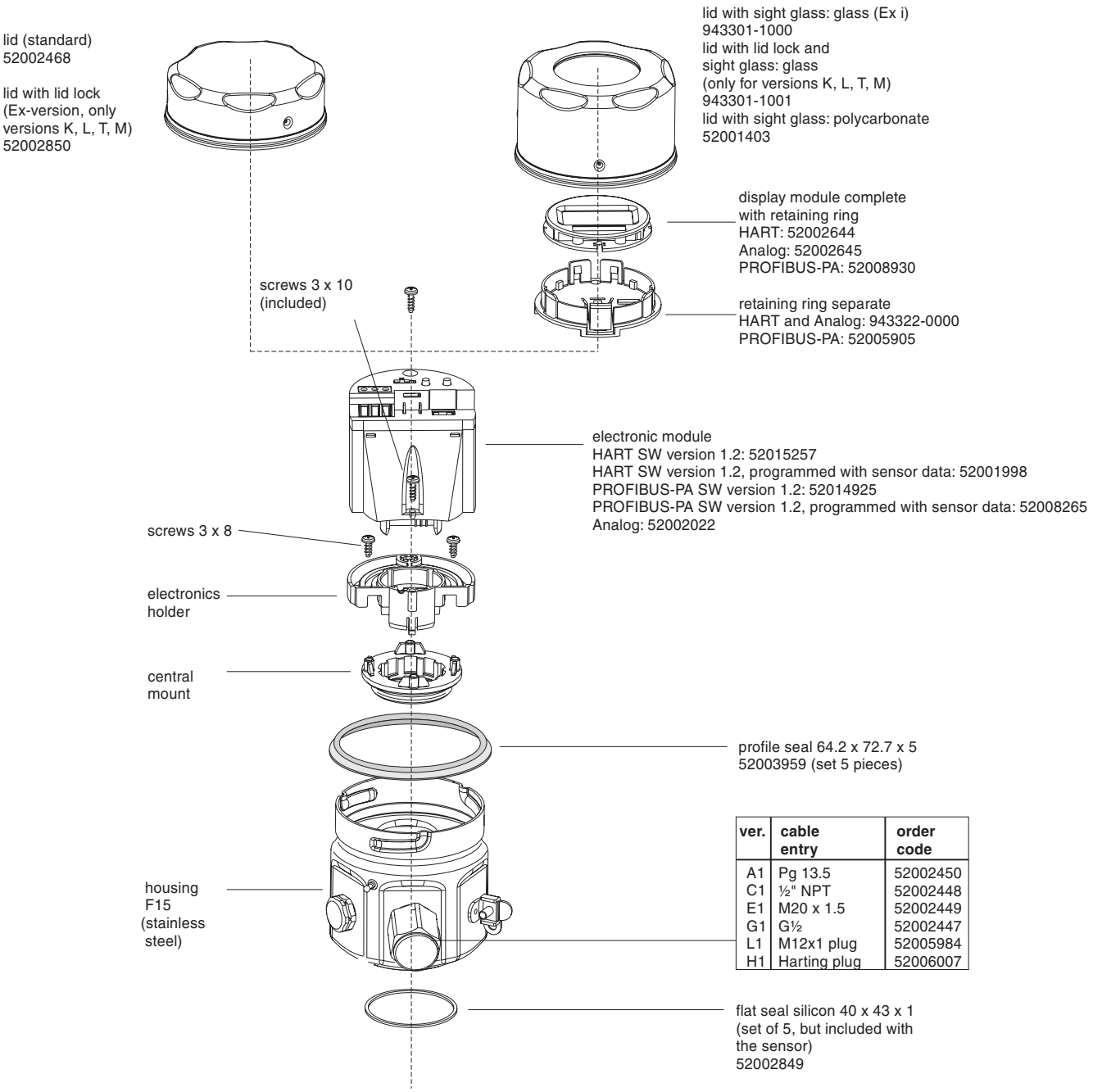

ver.	cable entry	order code
A1	Pg 13.5	52002450
C1	½" NPT	52002448
E1	M20 x 1.5	52002449
G1	G½	52002447
L1	M12x1 plug	52005984
H1	Harting plug	52006007

Electronic spare parts for Cerabar M with aluminum housing

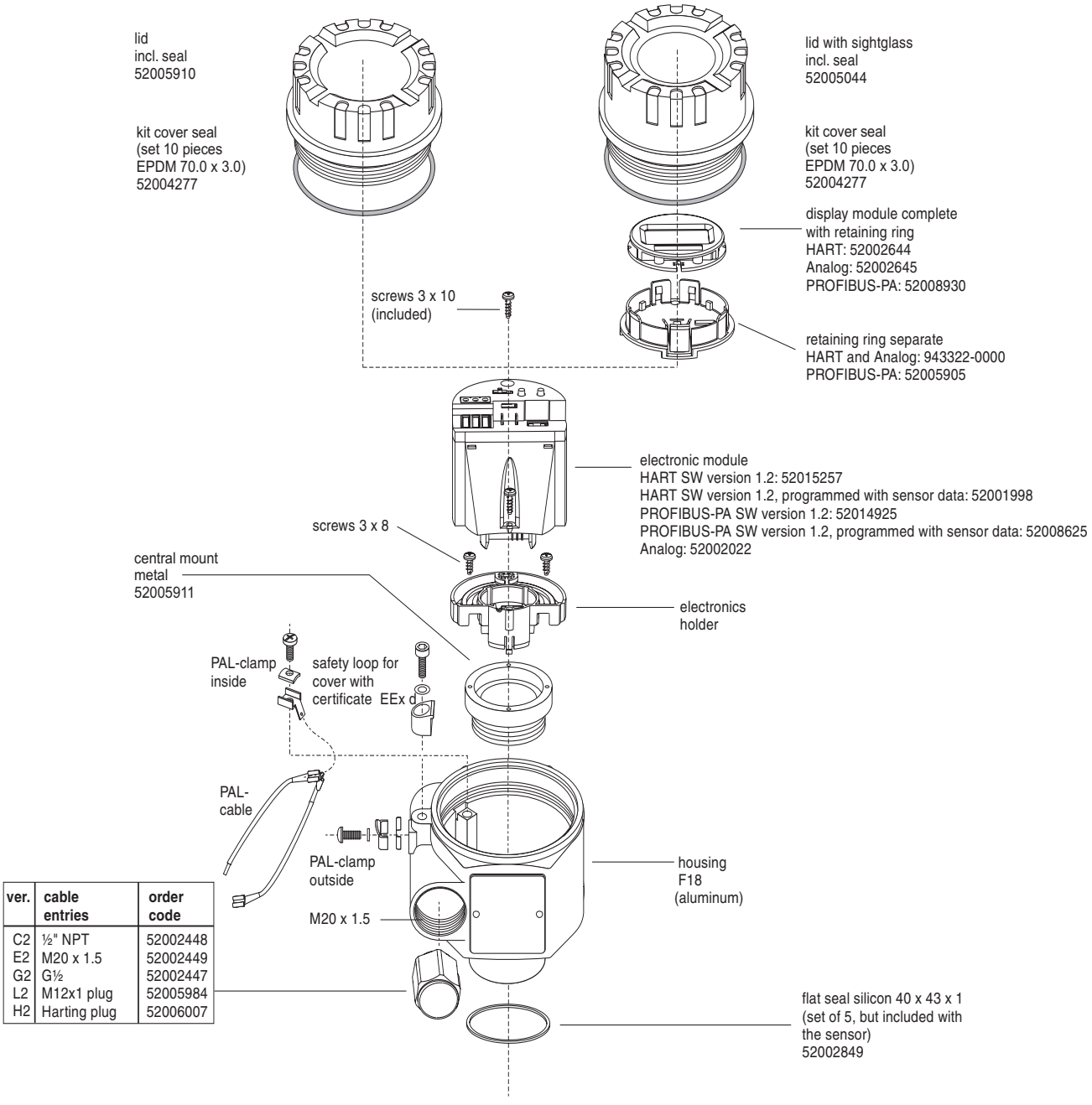

ver.	cable entries	order code
C2	½" NPT	52002448
E2	M20 x 1.5	52002449
G2	G½	52002447
L2	M12x1 plug	52005984
H2	Harting plug	52006007

Spare parts PMC 41

O-ring 26.7 x 1.78	order code
FKM	52009856*
FKM, oxygen use	52010137*
NBR	52009855*
EPDM	52017989*
FFKM, Kalrez	010561-0006
FFKM, Chemraz	52005749

*set of 5

exchangeable thread

ver.	thread	order code
1M	G½ external	52009786
1T	M20 x 1.5 external	52009787
1N	½" NPT external, ¼" internal	52009788
1A	½" NPT external, 11.4 mm internal	52009789
1K	PT½ external	52009790
1R	G½ external, 11.4 mm internal	52009791
1P	G½ external, G¼ internal	52009792
1S	PF½ external	52009793
2M	G½ external, Hastelloy	52000604
2N	½" NPT ext., ¼" internal, Hastelloy	52000603

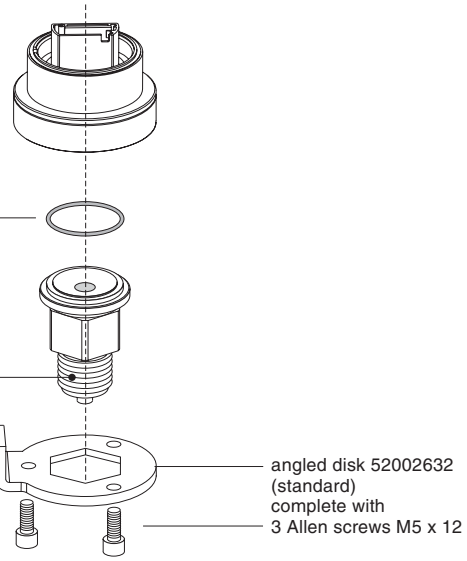

Spare parts PMC 45

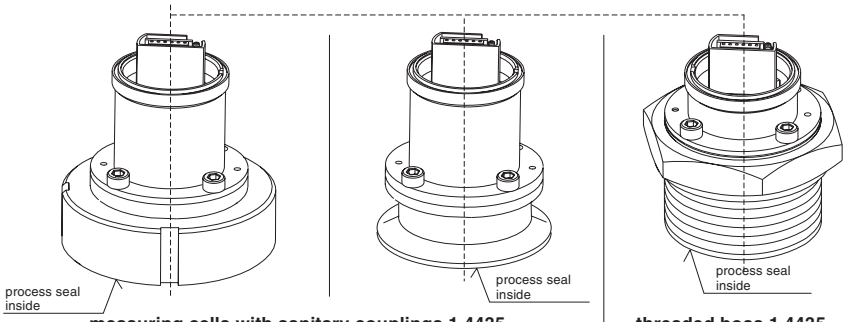

measuring cells with sanitary couplings 1.4435

DIN 11851, DN 50	(version AL)	Triclamp DN 2	(ver. DL)
DIN 11851, DN 40	(version AH)	Varivent 68 mm	(ver. LL)
DIN 11864-1-A DN 40	(version AS)	DRD D=65 mm	(ver. KL)
DIN 11864-1-A DN 50	(version AT)	APV Inline PN 40	(ver. HL)
SMS DN1½	(version EG)		
SMS DN2	(version EL)		

threaded boss 1.4435

G 2	(ver. AR)
2" NPT	(ver. BR)

process seals at the membrane O-rings 26.7 x 1.78		FKM	52009856*
		FFKM Kalrez	010561-0006
		FKM, oxygen use	52010137*
		Chemraz	52005749
	FDA listed	EPM, EPDM	52017989*
		NBR	52010155*

*set of 5

Spare parts PMP 41

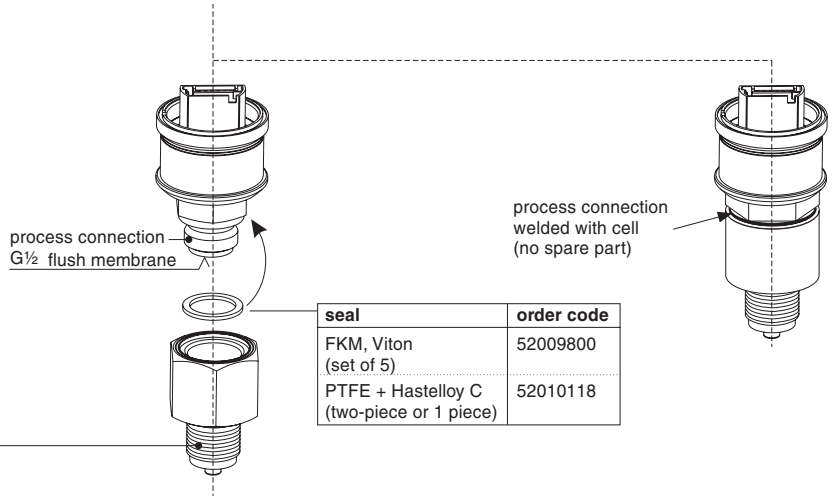

exchangeable thread 1.4435

versions	thread	order code
1M	G½ external	52011825
1G	½" NPT external	52011827
1X	½" NPT internal	52007530
1S	PF½ external	52007524
1K	PT½ external	52007523
1T	M20 x 1.5 ext.	52011826

seal	order code
FKM, Viton (set of 5)	52009800
PTFE + Hastelloy C (two-piece or 1 piece)	52010118

Spare parts PMP 45

measuring cells type PMP 45

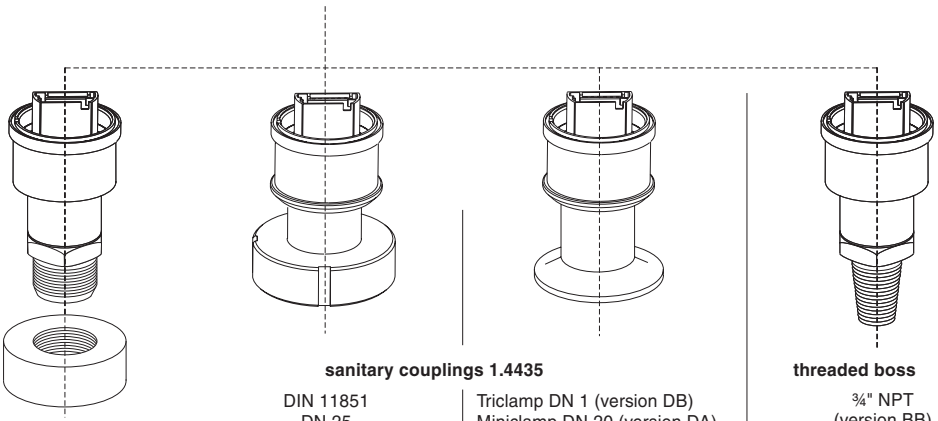

threaded boss G1 with metallic cone seal and weld-in adapter (version CD)

sanitary couplings 1.4435

DIN 11851
DN 25
(version AB)

Triclamp DN 1 (version DB)
Miniclamp DN 20 (version DA)
Varivent 50 mm (version LB)

threaded boss

¾" NPT
(version BB)

Spare parts PMP 46 and PMP 48

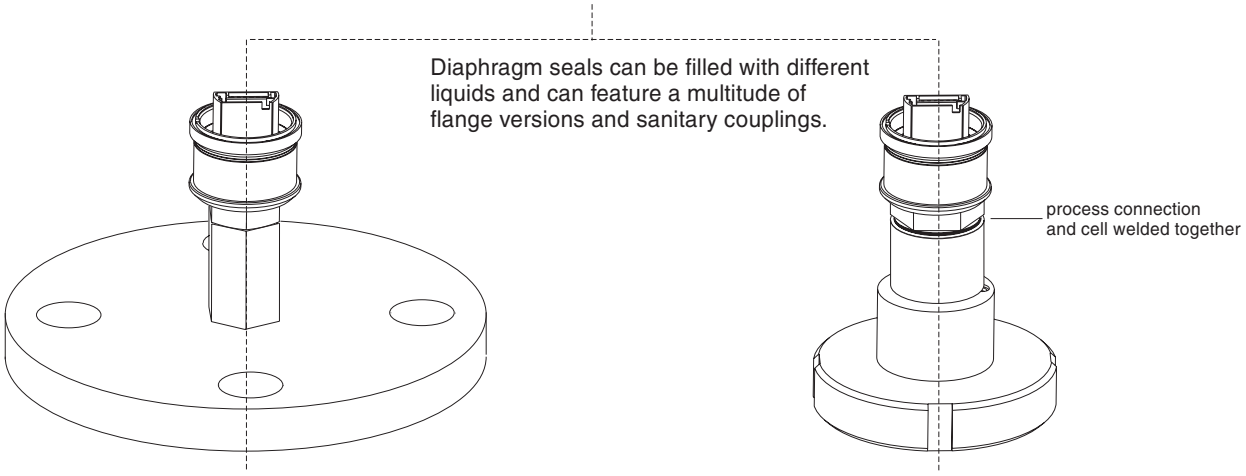

6.6 Mounting the digital display

The digital display is delivered already mounted when it is ordered with the device. It can be ordered as a spare part if required, Order No. 52002644.

Releasing the display

- Push up the latch with the arrow until the grip of the retaining ring on the electronic insert is audibly released.
- Release the retaining ring and lift off carefully to prevent the display cables from breaking.
- Remove the plug of the display from the electronic insert.

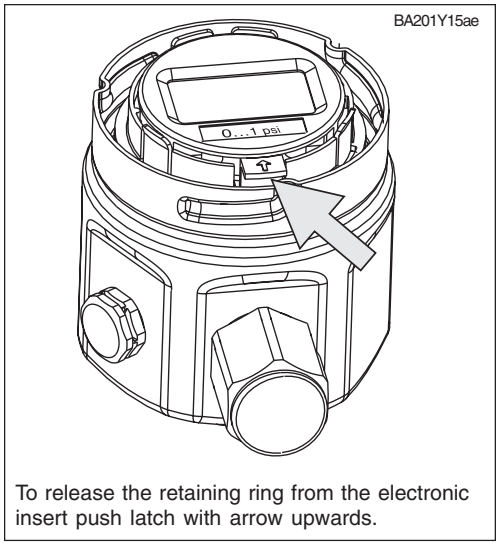

To release the retaining ring from the electronic insert push latch with arrow upwards.

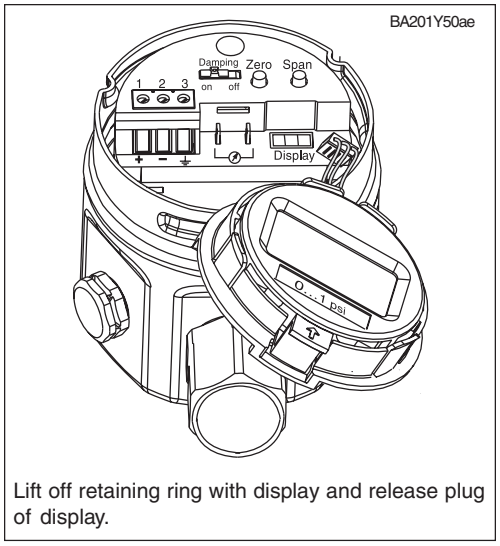

Lift off retaining ring with display and release plug of display.

Figure 6.1
Left:
Releasing the retaining ring
Right:
Lifting off display

Mounting the display

- Insert the plug of the display into the jack provided in the electronic insert and clip in ①.
- Insert the pin on the retaining ring into the hold provided in the electronic insert ②.
- Firmly press down the retaining ring with the display on the electronic insert. The grip clips in with an audible click.

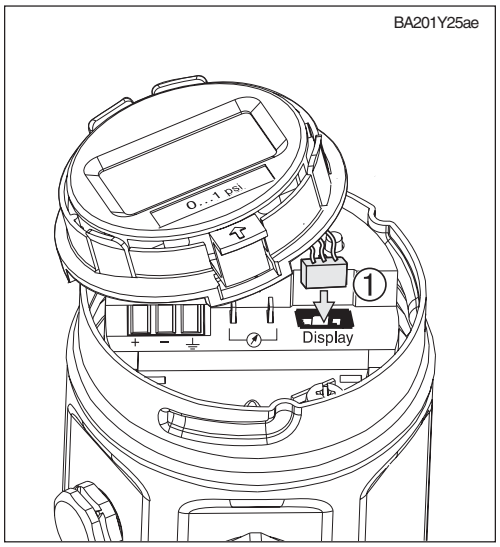

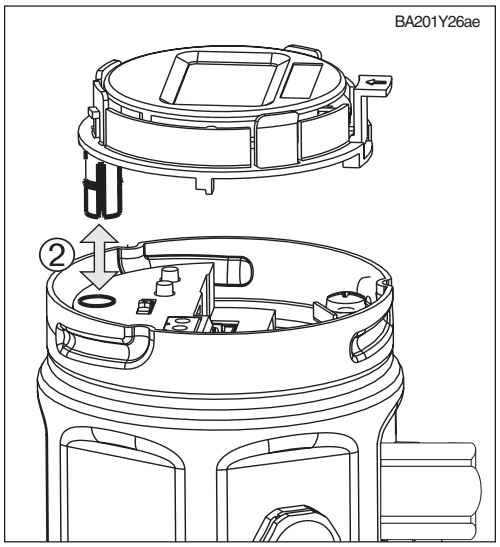

Figure 6.2
Mounting the display

6.7 Changing the electronic insert

If the present Smart electronic insert is to be replaced with another Smart electronic insert, it can be ordered under the following order number:

❑ 52001998
Cerabar M meter electronics, 4 to 20 mA, HART® protocol, with sensor data. When ordering, specify device's sensor number (see nameplate). Your electronic insert is then realigned at the factory to the data of the present sensor.

❑ 52001997
Cerabar M electronics, 4 to 20 mA, HART® protocol, without sensor data. When ordering, the electronic insert is programmed with a default data set. In order to achieve the defined measuring accuracy again, re-enter the data of the present sensor after replacing the electronic insert (see section on the following page "Entering sensor data").

After replacing the electronic insert the device must be recalibrated. Information on calibration is provided in Chapter 4 "Commissioning".
If the available Smart electronic insert is replaced with an analog electronic insert, the specifications in Operating Instructions BA 200P apply; for the PROFIBUS-PA electronic insert Operating Instructions BA 222P apply.

Removing the electronic insert

- Where appropriate, loosen and remove the retaining ring with the display and release the display's plug from the electronic insert.
- Release the connecting cable from the electronic insert.
- Loosen screws ① and ② on the electronic insert.
- Lift out the electronic insert.

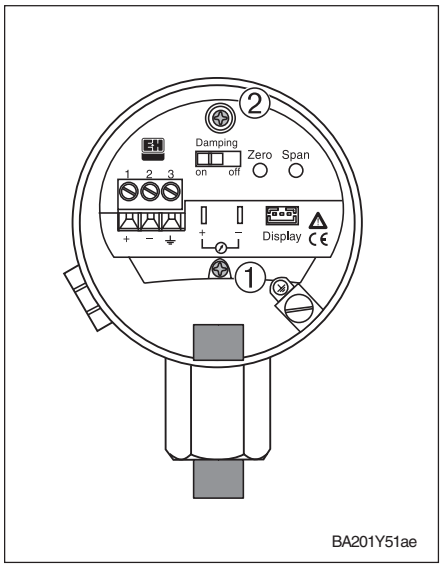

Figure 6.3
Position of the screws ① and ② for releasing the electronic insert

Mounting the electronic insert

- Plug in the new electronic insert and tighten screws ① and ②.
- Connect the connecting cable as shown in Chapter 2.5 “Electrical connection”.
- Carry out a calibration as explained in Chapter 4 “Commissioning”.
- If necessary, mount the display.

Entering sensor data

A sensor pass with sensor data is located in the housing of each device. This data must be re-entered if the electronics are replaced.

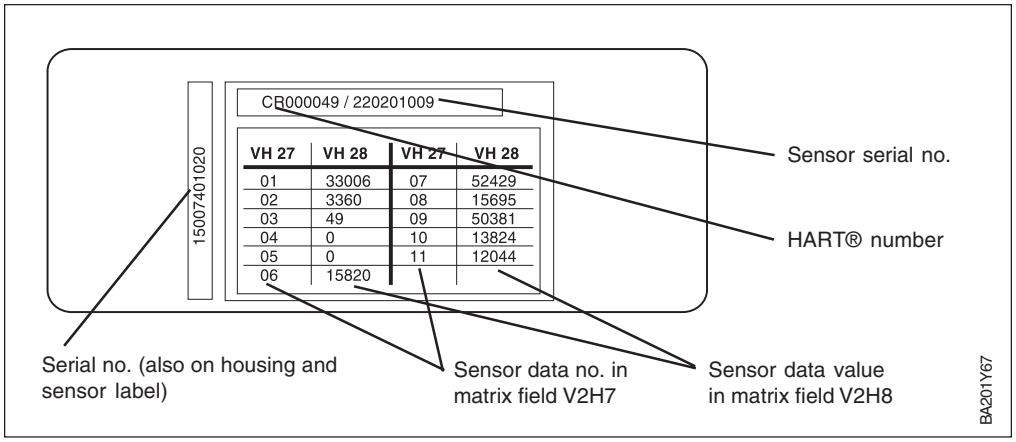

Figure 6.4
Example sensor pass

Before entering the sensor data, the matrix fields V2H7 and V2H8 are released by the code 333. All other matrix fields are then blocked against unauthorized operation. After entering, unlock the matrix fields again and perform a reset with code 2380.

Note!
When entering the sensor data, the error code E101 “Sensor table check sum error” is shown. The error message disappears when the sensor data is entered completely and correctly.

Carry out the entry procedure as follows:

#	Matrix	Route through the menus	Input
Main group: Service			
1	Lock operation		
	V9H9	➤ Security locking	333
Main group: Transmitter Information			
2	Entering sensor data		
	V2H7	➤ Enter sensor data no.	01
	V2H8	➤ Enter sensor check sum	e.g. 3306
	V2H7	➤ Enter sensor data no.	02
	Enter all other pairs of values		
	V2H7	➤ Enter sensor data no.	11
	V2H8	➤ Enter sensor coefficient A1	e.g. 12044
Main group: Service			
3	Unlock operation		
	V9H9	➤ Unlocking	130
Main group: Transmitter information			
4	Carry out reset		
	V2H9	➤ Adopt sensor data	Code 2380

6.8 Changing the sensor

If the sensor has to be changed, Endress+Hauser offers a complete housing with the new sensor and process connection required but without an electronic insert. Therefore, when changing the sensor, simply remove the electronic insert from the old housing and install it in the new one. After changing the measuring cell, the sensor parameters of the new sensor and the Cerabar M must be recalibrated.

- Ordering a housing with sensor and process connection:
  PM❑ 4❑ – ❑ ❑❑ ❑❑ ❑ W ❑ ❑❑ ❑ ❑
- For instructions on mounting the electronic insert and entering sensor parameters, see Chapter 6.7 “Changing the electronic insert”.
- For instructions on calibration, see Chapter 4 “Commissioning”.

6.9 Changing the process seal

The process seal of the Cerabar M PMC 41, PMP 41 and PMC 45 can be replaced. All process seals can be interchanged as required. Observe the different temperature limits of the individual materials. For further information, see Chapter 7 “Technical Data”.

PMC 41

Changing the process seal for PMC 41:

- Loosen the screws on the retaining ring of the exchangeable thread.
- Remove the retaining ring and exchangeable thread.
- Clean the sealing surfaces and diaphragm carefully.
- Replace process seal.
- Secure the exchangeable thread with the retaining ring and screws.

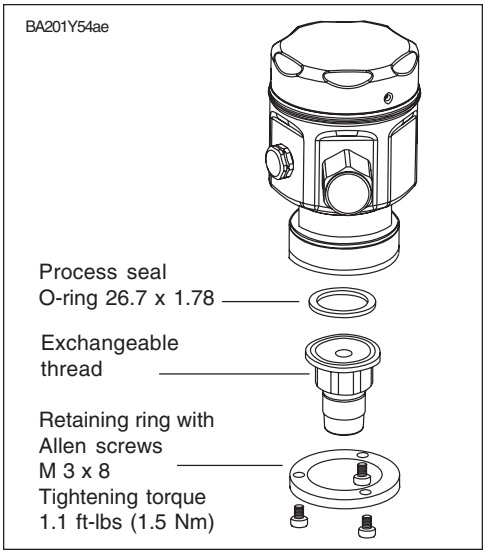

PMP 41

Changing the process seal on the PMP 41 (only versions with exchangeable thread):

- Loosen the exchangeable thread.
- Clean the sealing surfaces and diaphragm carefully.
- Replace process seal.
- Tighten the exchangeable thread.

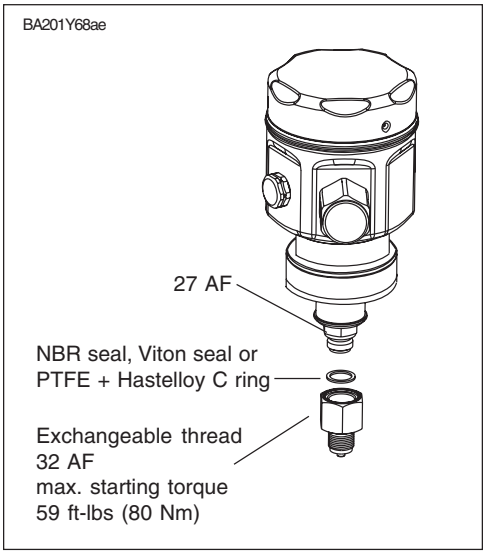

PMC 45

Changing the process seal on the PMC 45: (Process seal for a G 1½, 1½ threaded connection NPT or M 44x1.25 cannot be changed.)

- Loosen the screws of the process connection.
- Clean the sealing surfaces and diaphragm carefully.
- Replace process seal.
- Secure the process connection with the screws.

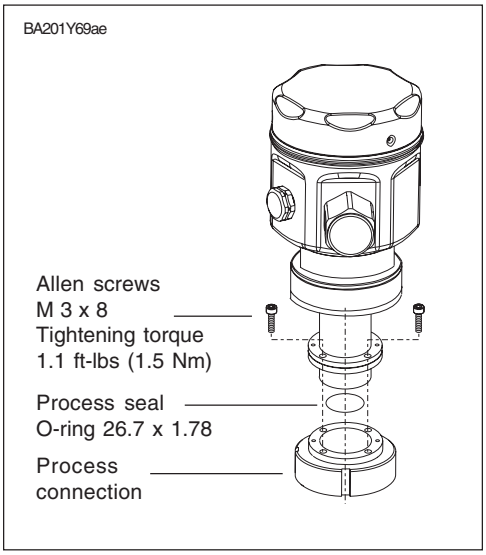

6.10 Sensor calibration

You can use the “Low Sensor Cal” (V7H4) and “High Sensor Cal” (V7H5) parameters to recalibrate a sensor if you want to calibrate your sensor exactly to a measuring range or want to mount a diaphragm seal, for example.
The highest accuracy of the pressure transmitter is obtained when the value for the “Low Sensor Cal” (V7H4) parameter corresponds to the lower range value (V0H1/V0H3) and the value for the “High Sensor Cal” (V7H5) parameter corresponds to the upper range value (V0H2/V0H4).

There must be a known reference pressure for the new lower or upper value of the sensor characteristic curve. The more accurate the reference pressure during sensor calibration, the higher the accuracy of the pressure transmitter later. A new value is then assigned to the applied pressure using the “Low Sensor Cal” (V7H4) and “High Sensor Cal” (V7H5) parameters.

#	VH	Entry	Remarks
1	A device with a sensor: 0.0 - 145 psi (10 bar) should be recalibrated for the range 14.5 - 87 psi (1.0 - 6.0 bar)		
2	Reference pressure acting for value “Low Sensor Cal” (V7H4) = 14.5 psi (1.0 bar).		
3	V7H4	14.5 (1.0)	The value 1.0 is assigned to the acting pressure.
4	Reference pressure acting for value “High Sensor Cal” (V7H5) = 87 psi (6.0 bar).		
5	V7H5	87 (6.0)	The value 6.0 is assigned to the acting pressure.
6	The sensor is now calibrated for 14.5 - 87 psi (1.0 - 6.0 bar). The matrix fields V7H4 and V7H5 display: Low Sensor Cal (V7H4) = 14.5 psi (1.0 bar) High Sensor Cal (V7H5) = 87 psi (6.0 bar)		

Sensor characteristic curve – here, e.g. for a pressure sensor: 0 - 145 psi (0.0 - 10.0 bar)

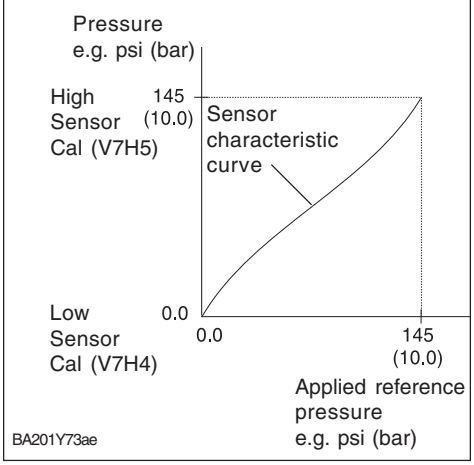

Sensor characteristic curve – recalibrated for the measuring range: 14.5-87 psi (1.0-6.0 bar)

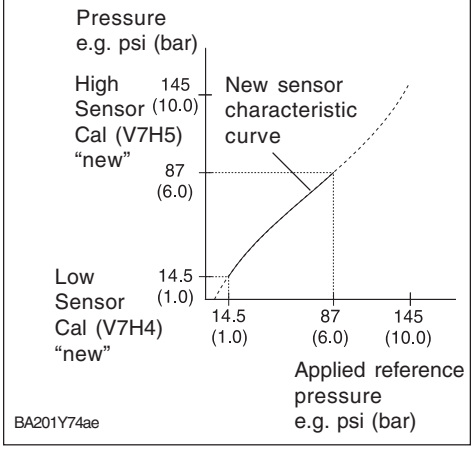

Note!

- By entering the reset code “2509” in matrix field V2H9, you reset the following parameters to the factory setting:
  – Low Sensor Cal = Lower measuring limit (V7H4 = V7H6),
  – High Sensor Cal = Upper measuring limit (V7H5 = V7H7),
- If the “Low Sensor Cal” (V7H4) and “High Sensor Cal” (V7H5) values are too close together, the device outputs the error message “E 104”.

7 Technical Data

General information

Manufacturer	Endress+Hauser
Device	Pressure transmitter
Designation	PMC 41, PMC 45, PMC 45, PMP 45, PMP 46, PMP 48
Technical documentation	BA 201P/24/ae version 12.03

Application

Measurement of absolute and gauge pressure in gases, vapors, liquids and dusts

Operation and system design

PMC 41, PMC 45 with ceramic sensor	The pressure causes a slight deflection of the ceramic disphragm of the sensor. The change in the capacitance is proportional to the pressure and is measured by the electrodes of the ceramic sensor. Volume of chamber: approx. 0.078 in³ (2 mm³)
PMP 41, PMP 45, PMP 46, PMP 48 with metal sensor	The process pressure acting on the metallic separating diaphragm of the sensor is transmitted via a filling fluid to a resistance bridge. The change in the output voltage of the bridge is proportional to the pressure and is then measured. Volume of chamber: smaller than 0.039 in³ (1 mm³)
Measuring system	Cerabar M and power supply e.g. via RN 221 transmitter power pack and operation via – two keys on the device and a plug-in display – DXR 275 handheld terminal – PC with the Commuwin II operating program via Commubox FXA 191
Construction	Stainless steel or aluminum housing, process connections according to European, American and Japanese standards and all common diaphragm seal versions
Signal transmission	4 to 20 mA with HART communications signal, 2-wire

Input

Measured variables	Absolute or gauge pressure

Measuring ranges

PMP 46, PMP 48:
The specified overload applies to the sensor. Please also note the maximum permissible gauge pressure when using diaphragm seals.

PMC 41, PMC 45				PMP 41, PMP 45, PMP 46, PMP 48			
Type of pressure	**Measurement limits**	**Min. span (TD 10:1)**	**Overload**	**Type of pressure**	**Measurement limits**	**Min. span (TD 10:1)**	**Overload**
	psi (bar)	**psi (bar)**	**psi (bar)**		**psi (bar)**	**psi (bar)**	**psi (bar)**
gauge	0 - 1.5 (0 - 0.1)	0.15 (0.01)	60 (4)	**gauge**	0 - 15 (0 - 1)	1.5 (0.1)	60 (4)
gauge	0 - 6 (0 - 0.4)	0.6 (0.04)	100 (7)	**gauge**	0 - 60 (0 - 4)	6 (0.4)	232 (16)
gauge	0 - 15 (0 - 1)	1.5 (0.1)	150 (10)	**gauge**	0 - 150 (0 - 10)	15 (1)	600 (40)
gauge	0 - 60 (0 - 4)	6 (0.4)	360 (25)	**gauge**	0 - 600 (0 - 40)*	60 (4)	2320 (160)
gauge	0 - 150 (0 - 10)	15 (1)	600 (40)	**gauge**	0 - 1500 (0 - 100)*	150 (10)	6000 (400)
gauge	0 - 600 (0 - 40)	60 (4)	850 (60)	**gauge**	0 - 6000 (0 - 400)*	600 (40)	9000 (600)
gauge	-1.5 - 1.5 (-0.1 - 0.1)	0.3 (0.02)	60 (4)	**gauge**	-15 - 15 (-1 - 1)	3 (0.2)	60 (4)
gauge	-6 - 6 (-0.4 - 0.4)	1.1 (0.08)	100 (7)	**gauge**	-15 - 60 (-1 - 4)	7.2 (0.5)	232 (16)
gauge	-15 - 15 (-1 - 1)	3 (0.2)	150 (10)	**gauge**	-15 - 150 (-1 - 10)	15 (1)	600 (40)
gauge	-15 - 60 (-1 - 10)	7.2 (0.5)	360 (25)		*absolute pressure		
gauge	-15 - 150 (-1 - 10)	15 (1.0)	600 (40)				
absolute	0 - 6 (0 - 0.4)	0.6 (0.04)	87 (6)	**absolute**	0 - 15 (0 - 1)	1.5 (0.1)	60 (4)
absolute	0 - 15 (0 - 1)	1.5 (0.1)	130.5 (9)	**absolute**	0 - 60 (0 - 4)	6 (0.4)	232 (16)
absolute	0 - 6 (0 - 4)	6 (0.4)	360 (25)	**absolute**	0 - 150 (0 - 10)	15 (1)	600 (40)
absolute	0 - 150 (0 - 10)	15 (1)	600 (40)	**absolute**	0 - 600 (0 - 40)	60 (4)	2320 (160)
absolute	0 - 600 (0 - 40)	60 (4)	850 (60)	**absolute**	0 - 1500 (0 - 100)	150 (10)	6000 (400)
				absolute	0 - 6000 (0 - 400)	600 (40)	9000 (600)

Resistance to low pressures (vacuum resistance)	PMC 41, PMC 45	– Sensors with nominal value 1.5 psi (0.1 bar): to 10 $psi_{absolute}$ (0.7 bar_{abs}) all other sensors: to 0 $psi_{absolute}$ (0 bar_{abs})
	PMP 41, PMP 45 PMP 46, PMP 48	– To 0.15 $psi_{absolute}$ (10 $mbar_{abs}$) – Depends on the filling liquid of diaphragm seal, see Technical Information TI 322P
Adjusting the span (Turn down)		TD 10:1 Turn down (TD) = nominal value / set span – Example (see adjacent Figure 7.1): Nominal value = 14.5 psi (1 bar) Set span = 5.8 psi (0.4 bar) TD = 1:0.4
Zero point increase and decrease		Within the extended range limits, see table on page 40 for range limits. – Examples (see adjacent Figure 7.2): Gauge pressure sensor: 0-58 psi (0-4 bar) Extended range limits -2.9 - 60.9 psi (-0.2 - 4.2 bar) Absolute pressure sensor: 0-145 psi (0-10 bar) Extended range limits: 0-152 $psi_{absolute}$ (0-10.5 bar_{abs})

Input
(continued)

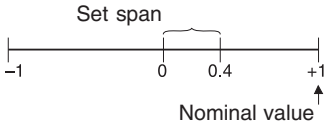

Figure 7.1
Turndown

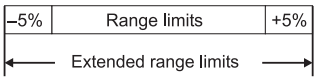

Figure 7.2
Extended range limits

Output

Output signal		4 to 20 mA signal with HART protocol
Signal on alarm		Optional 3.6 mA, 22 mA or CONTINUE
Damping	Local: Remote:	Depending on switch position: off: 0 s; on: 2 s in switch position "on" freely adjustable between 0 and 40 s

Accuracy

Reference operating conditions	To DIN IEC 770 T_U = 77°F (25°C) Accuracy data apply after entering "Low sensor calibration" and "High sensor calibration" for lower range value and upper range value.
Linearity including hysteresis and reproducibility (based on the limit point method to DIN IEC 770)	±0.2% of set span
Special specifications are required for linearity at low absolute pressure measuring ranges (due to smallest possible measuring uncertainty which may be transferred by the DKD calibration point)	PMC 41, PMC 45: ≥0.6 psia (40 $mbar_{abs}$ to <1.5 psia (100 $mbar_{abs}$): ±0.3% of set span
Use of absolute pressure sensors with measuring ranges smaller than 145 psi (10 bar) for gauge pressure measurement	Accuracy can be influenced by fluctuating ambient air pressure.
Warm-up time	1 s
Rise time	220 ms
Setting time	600 ms
Long-term drift (with reference to set span)	±0.1% per year ±0.25% per 3 years
Thermal effects: – With reference to the set span – Applies to transmitter without diaphragm seal and capillary tubes	for 14 to 140°F (-10 to +60°C): ±(0.2% x TD + 0.2%) for -40 to +14°F (-40 to -10°C); 140 to 185°F (60 to 85°C): ±(0.4% x TD + 0.4%) for process temperature 185 to 257°F (85 to 125°C) (PMC 45/PMP 45): ±(0.6% x TD+0.6%)
Temperature coefficient (maximum TK) – If the value of the temperature coefficient exceeds to the value of the thermal effects then the thermal effects automatically apply. – Applies to the transmitter without diaphragm seal and capillary tubes.	for zero signal and span: for 14 to 140°F (-10 to +60°C): ±0.08% of nominal value/10 K for -40 to +14°F (-40 to -10°C); 140 to 185°F (60 to 85°C): ±0.1% of nominal value/10 K for process temperature 185 to 257°F (85 to 125°C) (PMC 45/PMP 45): ±0.12% of nominal value/10K
Vibration effects	None (4 mm in path peak-to-peak 5 Hz - 15 Hz, 2 g: 15 Hz - 150 Hz. 1 g: 150 Hz - 2000 Hz)

Process conditions

Mounting conditions	Any position, zero point shift due to position can be corrected.

Ambient conditions

Ambient temperature range	-40 to +185°F (-40 to +85°C) For Ex-devices see safety instructions XA (ATEX) or Control Drawing ZD (CSA or FM)
Ambient temperature limits (short-term)	-40 to +257°F (-40 to +100°C)
Storage temperature	-40 to +185°F (-40 to +85°C)
Climatic class	4K4H to DIN EN 60721-3
Degree of protection	– IP 65 with Harting plug (Han 7D) – IP 66 or NEMA 4X with cable gland or cable entry or M12 plug (with gauge sensor) – IP 68 (1 m water over 24 h) or NEMA 6P (1.8 m water over 30 min) with assembled cable with reference air feed or M12 plug (with absolute sensor)
Electromagnetic compatibility	Interference emission to EN 61326 electrical equipment B; interference immunity to EN 61326 Annex A (industrial) and NAMUR Recommendation EMC (NE 21). Interference influence to EMC. Interference influence to EMC: 0.5% Use shielded, twisted pair two-core cabling.

Process conditions

Medium temperature range	PMC/PMP 41: -40 to +185°F (-40 to +85°C) PMC/PMP 45: -40 to +257°F (-40 to +125°C) PMP 46/48: depends on maximum permissible temperature of diaphragm seal filling liquid and on diaphragm diameter, see TI 322P. For Ex-devices see safety instructions XA (ATEX) or Control Drawing ZD (CSA or FM). PMC 41, PMC 45, PMP 41: Please note the temperature limits of seals used.
Medium temperature limits	PMC 45, PMP 45: Cleaning temperature for Cerabar M flush-mounted 302°F (150°C) for max. 1 hour. Diaphragm seal with temperature spacer and high-temperature oil: max 662°F (350°C). PMC 41, PMC 45, PMP 41: Please note the temperature limits of seals used – see page 43
Medium pressure limits	Corresponds to permissible overload and resistance to low pressure – see table on page 40. PMP 46, PMP 48: depends on diaphragm seal filling liquid – see TI 322P

Mechanical construction

Design

Housing	Stainless steel (Type F15) or aluminum (Type F18) Optional electrical connection – Cable gland M 20 x 1.5 – Cable entry Pg 13.5, G½, ½ NPT – Harting plug (Han7D) or plug M 12 x 1 – Permanently attached cable with reference air feed
Pressure specifications	See nameplate. Observe pressure-temperature derating.

Materials

Housing		Stainless steel 1.4404 (AISI 316L), Ra < 0.8 µm or die-cast aluminum housing with protective polyester-based powder coat
O-ring	stainless steel housing aluminum housing	– Silicon – NBR
Nameplate	stainless steel housing aluminum housing	– engraved on housing with laser – 1.4301 (AISI 304)
Process connections	PMP 41 PMC 41 PMP 45, PMC 45, PMP 46, PMP 48	– 1.4435 (AISI 316L), adapter 1.4435 (AISI 316L) – 1.4435 (AISI 316L), Alloy 2.4819 (C276) – 1.4435 (AISI 316L)
Process diaphragm	PMC 41, PMC 45 PMC 41, PMP 45, PMP 46 PMP 48	– Al_2O_3 aluminum oxide ceramic (FDA-conform) (PMC 41: 96%; PMC 45: 99.9%) – 1.4435 (AISI 316L) – Alloy 2.4819 (C276), Tantalum, PTFE film on 1.4435 (AISI 316L)
Coupling nut		1.4307
Seals		See adjacent table
Mounting accessories		Mounting bracket for pipe and wall mounting 1.4301 (AISI 304)
Filling fluid in diaphragm seals		Silicone oil, vegetable oil (FDA-conform), glycerine, high-temperature oil, Fluorolube

Measuring cell

PMC 41, PMC 45 PMP 41, PMP 46, PMP 48	– None, dry cell sensor – Optional silicone oil or inert oil (Voltalef) for oxygen or vegetable oil (FDA-conform)
PMP 45	– Vegetable oil (FDA-conform)

1)	Seals	Temperature limits
1	FKM, Viton	-4°F (-20°C)
6	FKM, Viton grease-free	14°F (-10°C)
A	FKM, Viton oil and grease-free for oxygen	14°F (-10°C) to 2)
2	NBR	-4 to +176°F (-20 to +80°C)
7	FFKM, Kalrez compound 4079	41°F (5°C)
C	FFKM Chemraz	14°F (-10°C)
4	EPDM (FDA)	-40°F (-40°C)

1) from Cerabar order code
2) Note the application limits for oxygen (as per BAM list of non-metallic materials)

Display	Pluggable digital display with four-digit pressure display and bargraph with 28 segments.

Display and operating interface

Supply voltage	11.5 to 45 VDC FM approved IS: 11.5 to 30 VDC
Overvoltage category	II to DIN EN 61010-1
Ripple	No effect for 4 to 20 mA signal up to ±5% residual ripple with permissible range. With HART communicator and Commubox: max. ripple (measured on 500 ohm) 47 to 125 Hz: U_{pp} = 200 mV max. noise (measured on 500 ohm) 500 Hz to 10 kHz: U_{eff} = 2.2 mV

Power supply

Ignition protection	See Chapter “Notes on Safety”
CE Mark	The device meets the legal requirements of the EC directive. Endress+Hauser confirms that the device has been tested successfully by attaching the CE mark.
Pressure equipment directive	– This device conforms to Article 3 (3) of EC Directive 97/23/EC (pressure equipment directive) and is developed and produced in sound engineering practice. – PMP 46 with pipe diaphragm ≥ 1½" (DN 40/PN 40): Suitable for stable gases in Group 1 (Pressure Equipment Directive Category II)

Certificates and approvals

7.1 Max. Mounting Space

The dimension indicates the max. mounting space of Cerabar M (with high housing cover for the digital display).

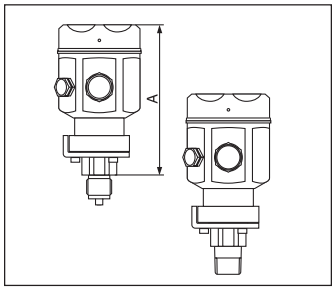

PMC 41
Dimension A
SS housing: 6.10" (155 mm)
Alum. housing: 6.57" (160 mm)

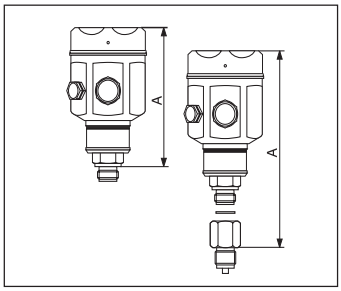

PMP 41
Dimension A, diaphragm flush-mounted
SS housing: 5.71" (145 mm)
Alum. housing: 5.90" (150 mm)

Dimension A, diaphragm internal
SS housing: 7.28" (185 mm)
Alum. housing: 6.85" (174 mm)

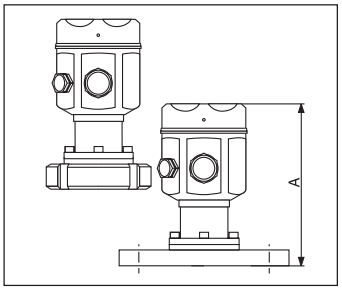

PMC 45
Dimension A
SS housing: 6.85" (174 mm)
Alum. housing: 7.09" (180 mm)
(see also TI 321P)

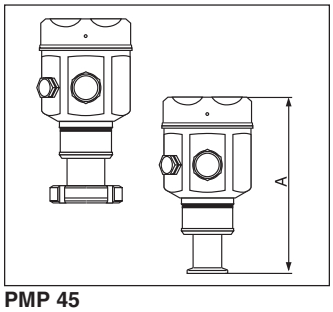

PMP 45
Dimension A
SS housing: 6.57" (167 mm)
Alum. housing: 6.77" (172 mm)
(see also TI 321P)

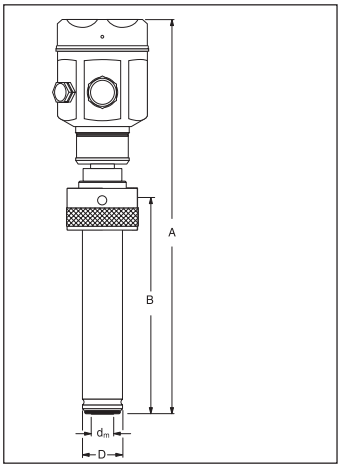

PMP 45 with King-Gage® process connection
Standard and retrofit sanitary level transmitter with flush 316L SS process diaphragm.

Model	A	B	D	d_m	Weld spud length
Short	7.76" (197 mm)	2.24" (57 mm)	1.26" (32 mm)	0.71" (18.1 mm)	1.87"
Standard	12.1 (308 mm)	6.61" (168 mm)	1.26" (32 mm)	0.71" (18.1 mm)	6.25"
Long	14.4" (365 mm)	8.86 (225 mm)	1.26" (32 mm)	0.71" (18.1 mm)	8.5"

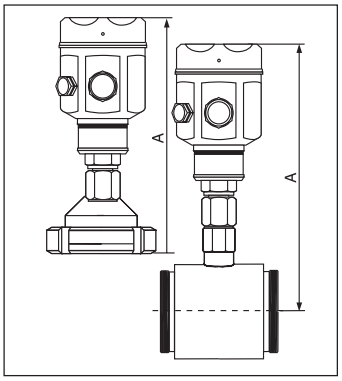

PMP 46
Dimension A: Diaphragm seal
SS housing: 10.5" (268 mm)
Alum. housing: 10.4" (265 mm)

Dimension A: Pipe diaphragm seal
SS housing: 11.4" (289 mm)
Alum. housing: 11.6" (294 mm)
(see also TI 322P)

PMP 48
Dimension A
SS housing: 11.3" (287 mm)
Alum. housing: 11.8" (300 mm)
(see also TI 322P)

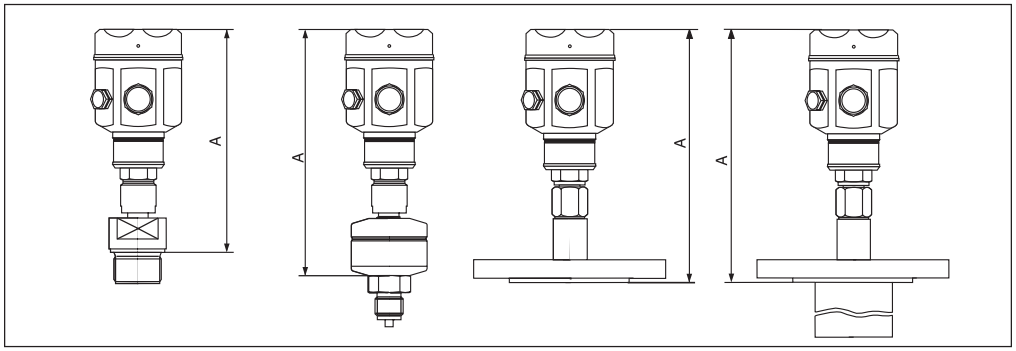

8 Operating Matrix

	H0	H1	H2	H3	H4	H5	H6	H7	H8	H9
V0 **Basic calibration**	Measured value	Set 4 mA	Set 20 mA	Confirm 4 mA autom.	Confirm 20 mA autom.	Set Bias pressure	Confirm Bias pressure autom.	Set Output Damping 0 - 40 s	Select safety MIN. MAX. CONTINUE	Select pressure unit
V1										
V2 Transmitter information	Diagnostic code	Last diagnostic	8011/8012 Software No.					Sensor data no.	Sensor data value	Reset
V3...V6										
V7 Sensor data	Current display	Off Simulation	Simulate current	Off Current output min. 4 mA	Low Sensor Calibration	High Sensor Calibration	Lower measuring limit	Upper measuring limit	Sensor pressure	
V8										
V9 Service								Pressure before bias correction		Security locking: not 130 Unlocking device: 130 Release V2H7, V2H8: 333
VA Communi-cation	Measuring point	System identifica-tion	User text	Serial number	Serial number Sensor					

Display field

This matrix gives a summary of factory settings.
You can also enter your values here.

	H0	H1	H2	H3	H4	H5	H6	H7	H8	H9
V0	—	0.0	V7H7	—	—	0.0	—	0.0	MAX.	psi (bar)
V1										
V2		0	xxxx							0
V3...V6										
V7	—	OFF	—	OFF			—	—	—	0
V8										
V9								—		130
VA	————	————								

Index

!
4 mA threshold 23

A
Application 6

C
Calibrating lower range value 19
Calibrating upper range value 20
Calibration 22
Capillary tubing 9
Ceramic measuring cell 6
Certain code 21, 26
Cleaning 28
Commissioning 4, 19
Commuwin II 17
Connection 12
  Commubox FXA 191 connection 14
  DXR 275 Handheld terminal connection 14
Current simulation 26

D
Damping 19, 21
Diagnosis 25-27
Display 16
Display, mounting 34

E
Electrical symbols 5
Electronic insert, changing 35-37
Error codes 25
Errors 25
Explosion hazardous areas 4
Explosion protection 5

G
Graphic operation 17

I
Information on measuring point 24
Installation 4
Installation drawing 47
Installation instructions 7

L
Locking 23

M
Maintenance 28-39
Measuring system 6
Metal measuring cell 6
Mounting accessories 11
Mounting bracket 11

N
Notes on safety 4

O
Operating elements 15-16
Operating matrix 17, 45
Operating principle 6
Operation 4, 15-18
Output with error 23

P
Position calibration, display (bias pressure) 22
Pressure unit 21
Process seal, changing 37

R
Reference pressure 22
Repair 28-39
Reset 26
Resetting to factory setting (Reset) 21

S
Sensor data, entering 36
Sensor, changing 37
Short operating instructions 2
Software history 2
Spare parts 29-33

T
Technical data 40-44
Temperature spacers 9

U
Universal HART® Communicator DXR 275 18
Unlocking 23
Usage 4

W
Warnings 25

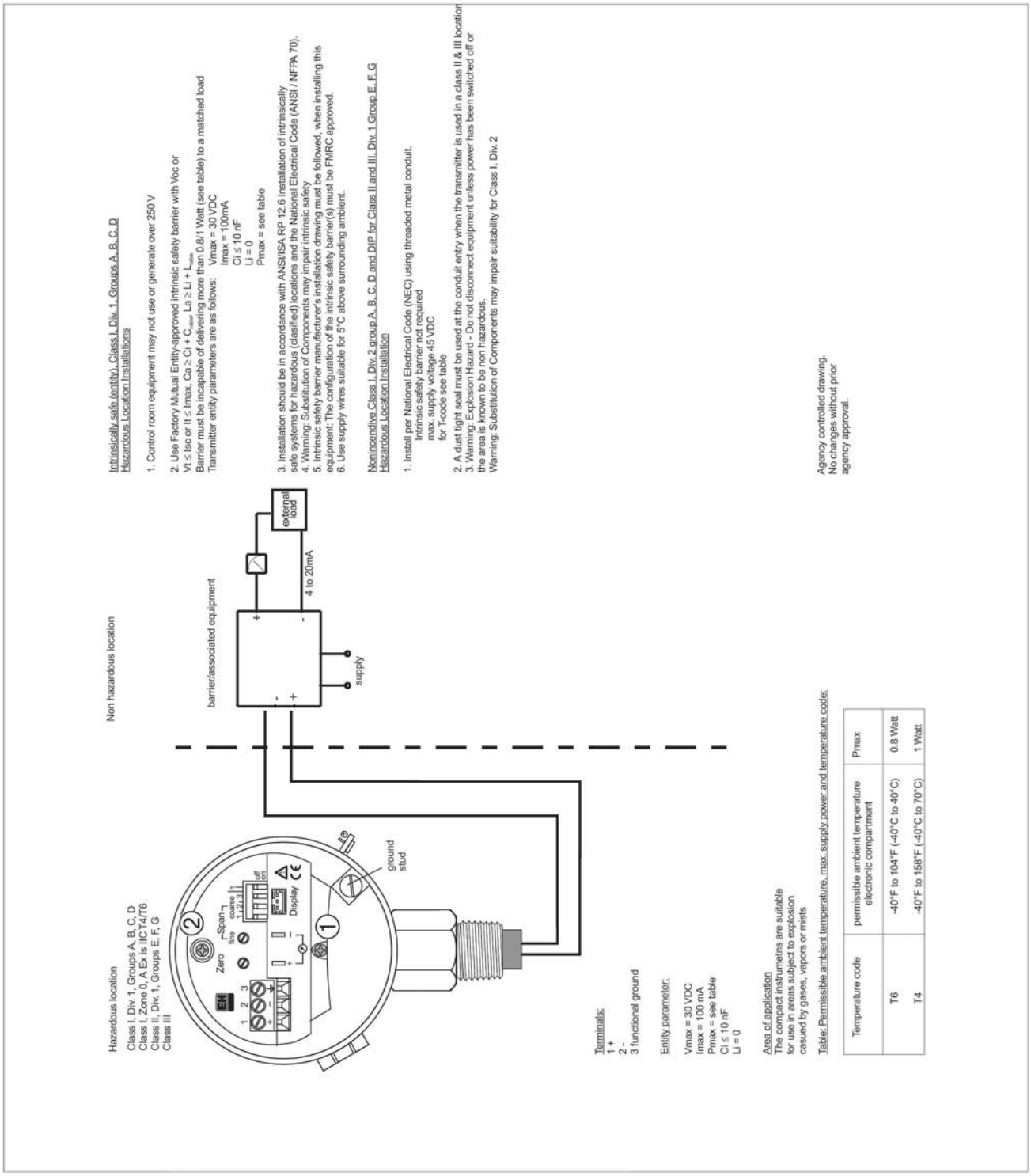

Installation drawing
Cerabar M
PMC 41, PMC 45,
PMP 41, PMP 45, PMP 46, PMP 48

For application and selection assistance,
in the U.S. call 888-ENDRESS

For total support of your installed base, 24 hours a day,
in the U.S. call 800-642-8737

Visit us on our web site, www.us.endress.com

United States	Canada	Mexico
Endress+Hauser, Inc. 2350 Endress Place Greenwood, IN 46143 Phone: (317) 535-7138 888-ENDRESS FAX: (317) 535-8498	Endress+Hauser Canada Ltd. 1440 Graham's Lane Unit 1, Burlington ON, L7S 1W3 Phone: (905) 681-9292 800-668-3199 FAX: (905) 681-9444	Endress+Hauser Paseo del Pedregal No. 610 Col. Jardines del Pedregal 01900, Mexico D.F. MEXICO Phone: (525) 568-2405 FAX: (525) 568-7459

Endress+Hauser
The Power of Know How

BA 201P/24/ae/12.03

© 2003 Endress+Hauser, Inc.

CHLORINE ANALYZER

TABLE OF CONTENTS:

A. DATA SHEETS
B. OPERATION AND MAINTENANCE MANUAL

MANUFACTURER: **SIEMENS – US FILTER**

MODEL #: **MICRO / 2000**

SUBCONTRACTOR / SUPPLIER
HARRELL & ASSOCIATES, INC.
CONTACT: DAVE HARRELL
POST OFFICE BOX 43068
FORT WORTH, TEXAS 76140
(817) 483-7582

CHLORINE ANALYZER

TABLE OF CONTENTS:

A. DATA SHEETS
B. OPERATION AND MAINTENANCE MANUAL

MANUFACTURER: **SIEMENS – US FILTER**

MODEL #: **MICRO / 2000**

SUBCONTRACTOR / SUPPLIER
HARRELL & ASSOCIATES, INC.
CONTACT: DAVE HARRELL
POST OFFICE BOX 43068
FORT WORTH, TEXAS 76140
(817) 483-7582

Water Technologies

Wallace and Tiernan® Analytical Instrumentation

Micro/2000® Residual Analyzer

SIEMENS

The Micro/2000® Residual Analyzer is the industry's most versatile, accurate and reliable on-line instrument for continuous measurement of oxidant residuals. High accuracy and the ability to measure low residuals down to 1 PPB bring a new level of efficiency to the disinfection process regardless of the application. From potable water and wastewater treatment to cooling water, swimming pools and industrial processes, the Micro/2000® Analyzer helps you control your entire treatment process from pretreatment using Potassium Permanganate, Chlorine Dioxide or Chlorine to distribution residual monitoring of Chloramines or free Chlorine.

Features

- Accurately measures free and total Chlorine, Chlorine Dioxide or Potassium Permanganate residuals at ranges from 0-0.1 to 0-50mg/L.
- Suitable for all applications such as wastewater, potable water and cooling water (fresh or seawater source).
- Unmatched sensitivity down to 1 PPB (0.001 mg/L utilizing 3 electrode measurement technology.
- Highest reliability available using a bare electrode cell with low maintenance and minimal chance of fouling.
- Long term stability of calibration that is unaffected by varying water quality, changes in turbidity or conductivity.
- Continuous amperometric measurement allows fast speed of response for control applications.
- Field proven in thousands of installations, now features simplified design and improved operation.

Key Benefits:

- **Accurate measurement of Chlorine, Chlorine Dioxide and Potassium Permanganate Residuals**
- **Fast speed of response for control applications**
- **Low maintenance bare electrode cell technology**
- **Wide variety of measurement ranges up to 50 mg/l**

Advanced Electronics

User-friendly, simple operation is made possible by "intelligent" microprocessor-based electronics. Housed in a NEMA 4X enclosure, this provides for easy access to all of the sophisticated features inherent in every Micro/2000® Analyzer.

A sunlight readable, alphanumeric display provides such information as residual levels, type of residual (free or total), alarm messages, etc. A six-button keypad provides access to the various displays, as well as set-up, calibration and diagnostic menus. Operator access can be restricted by two security codes for supervisory personnel. The unit can be easily configured for different operating ranges, alarm setpoints and display information.

Arrangements

Due to their modular construction, Micro/2000® Analyzer systems can be supplied in a variety of formats to suit any application. Systems are available in freestanding cabinets incorporating circular chart recorders, or as wall and panel mounted units with the protection of watertight, corrosion resistant NEMA 4X enclosures.

Three Electrode Measuring Cell

Utilizing universally accepted and time-proven amperometric measurement technology, the Micro/2000® Analyzer uses an innovative 3 electrode measuring cell to provide direct measurement of residuals with a sensitivity of +/- 1 PPB (0.001 mg/L).

Unlike some indirect measurement technologies such as ORP, amperometric measurement provides you with an accurate output and stable operation regardless of changing water conditions. With its bare electrode design, the Micro/2000® Analyzer is not susceptible to the fouling typical in membrane probe analyzers, caused by bacteria, grease or turbidity. Also, unlike membrane probe analyzers, it measures all species of Chlorine residuals including dichloramine.

The 3-electrode cell eliminates the need for the constant zero adjustment typical of other analyzers. Reliability and stability are vastly improved while maintenance is drastically reduced. The calibration and accuracy of the analyzer is not affected by changes in turbidity or conductivity, which can be a problem with some other analyzers on the market.

Unique Sample Flow System

The sample is delivered to the Micro/2000® Analyzer at a rate of 4-8 lpm (1-2 gpm) for potable water applications 11-19 lpm (3-5 gpm for wastewater applications via a suitable sample pump). A flushing Y-strainer in the sample line filters the sample and divides it into two streams. The larger excess sample stream is used to continuously flush the strainer screen. The smaller stream is throttled and flows to the analyzer.

Inside the Micro/2000® Analyzer, a valveless peristaltic pump is utilized to ensure a consistent sample reaches the analyzing cell for timely measurement in parallel with the actual process lag time. This pump eliminates the need for back-flushing and flow control orifices that

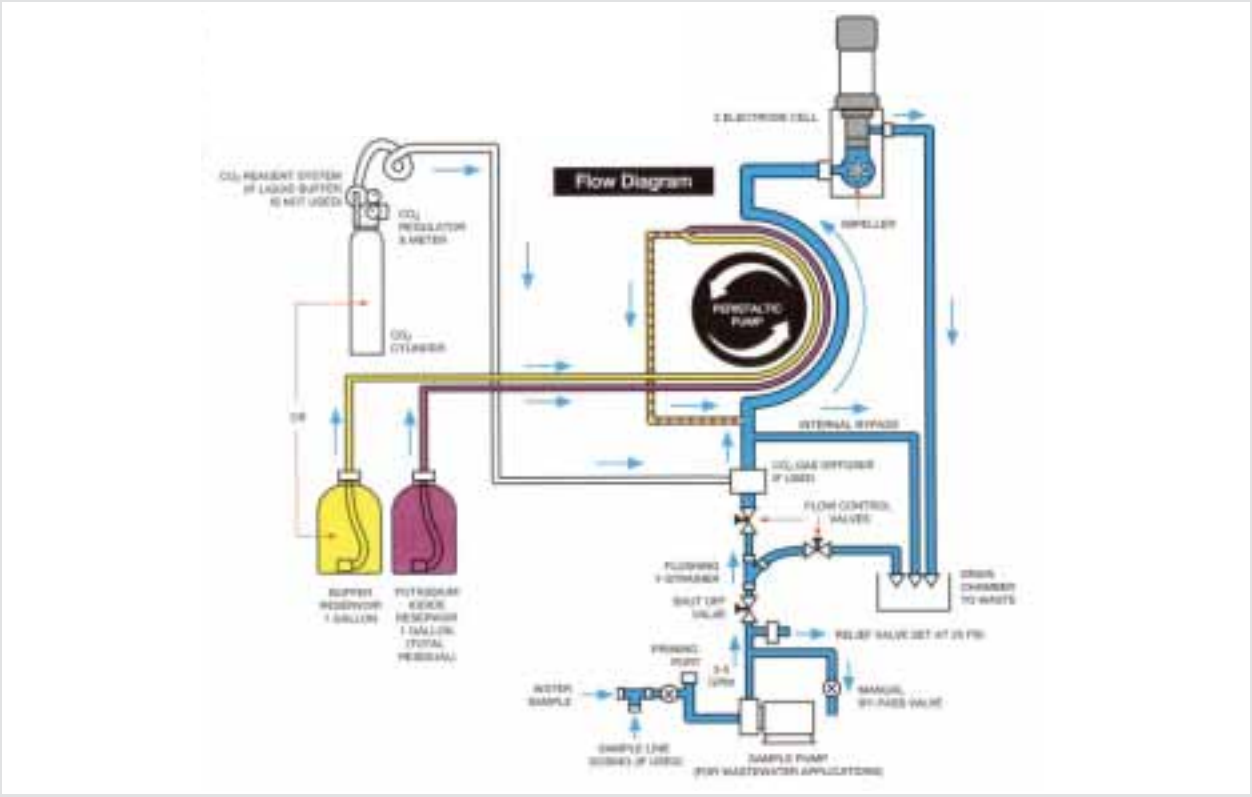

could become fouled. The same pump, also delivers liquid reagents, where required, for pH buffering and total residual measurement, in a fixed proportion to the sample. As an alternative, CO_2 gas is available for pH buffering. The small volume of the sample flow, together with inexpensive reagents, dramatically reduces operating costs without sacrificing performance or reliability. A motor driven impeller in the analyzing cell maintains stable fluid velocity and provides constant grit bombardment for cleaning electrode surfaces, further reducing maintenance requirements.

Automatic Sample Line Dosing

The Micro/2000® Analyzer is particularly well suited to wastewater applications. One of the inherent problems in this service is biological growth in the sample line, from the sample pump to the analyzer, due to very low Chlorine residuals. As an option, the analyzer can be supplied with a small dosing pump for metering a suitable bromocide (typically sodium hypochlorite) to clean the sample line. The pump is activated by the analyzer software to automatically dose the sample line periodically. During dosing, the analyzer's 4-20mA output is frozen to prevent upsets to the control or monitoring operations. Analyzer reliability is enhanced and maintenance is reduced.

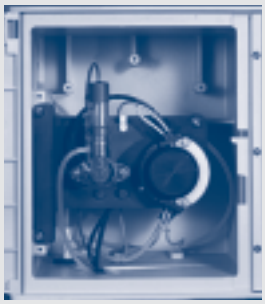

Technical Data

Type of Measurement
Amperometric. Continuously measures and indicates free or total Chlorine residual, Chlorine Dioxide or Potassium Permanganate residuals in potable water, primary or secondary treated wastewater or cooling water.

Accuracy
0.001 mg/L or 1% of full scale, whichever is greater. For any residual measurement, analyzer accuracy is highly dependent on the accuracy of the standardizing (calibrating) analytical procedures used (standard methods procedures). The Chlorine Dioxide procedures, in particular, can be subject to inherently large errors which will thus impact on the above accuracy statement.

Sensitivity
0.001 mg/L or 1% of full scale, whichever is greater

Repeatability
0.001 mg/L or 1% of full scale, whichever is greater.

Stability
Under favorable conditions +/- 1% of full-scale for 1 month.

Residual Measurement Ranges
0-0.10, 0-0.20, 0-0.50, 0-1.0, 0-2.0, 0-5.0, 0-10.0, 0-20.0 and 0-50.0 mg/L free or total Chlorine residuals, Chlorine Dioxide, or Potassium Permanganate residual

Continuous Operating Range
100:1 for each measurement range.

Speed of Response
90 sec. with 2 rpm pump motor.
180 sec. with 1 rpm pump motor.
(Sample is pumped to cell via an internal peristaltic pump.)

Output Signal
Isolated 4-20mA DC analog output proportional to residual. Maximum impedance 600 ohms.

Sample Requirements
Approximately 8 to 10 lpm (2-3 gpm)
Recommended fluid velocity is 5 ft/sec.
Maximum pressure 4 bar (60 psi), throttled to less than 0.3 bar (5 psi) at the Y-strainer before the analyzer inlet. (Measuring cell sample requirements 0.5 L/min.) In long sample lines, greater flow will prevent a lag in readings. An optional remote sample pump is available.

Liquid Reagents
In free Chlorine residual applications where pH varies, a pH 4 buffer solution is also fed. In most wastewater applications, a detergent is added to the Potassium Iodide solution. Pump inlet tubing, with strainers, is placed into the reagent bottles. A one-gallon bottle of any reagent lasts from 3-10 weeks. For Potassium Permanganate or Chlorine Dioxide residuals in the presence of free Chlorine, Ammonium Sulfate solution is added similar to the above.

Gas Reagent
Instead of liquid pH conditioning, for free Chlorine residual measurement in potable or cooling water, an optional Carbon Dioxide system is available. This includes a pressure regulator, tubing, purge meter, regulating valve and diffuser.

Salinity
Fresh to sea water.

Piping Connections
Modular arrangement has 19 mm (3/4") female NPT sample line, 32 mm (1-1/4") female NPT drain connection; wall mounted arrangement has 13 mm (1/2") female NPT sample line, 1 mm (3/8") and 32 mm (1-1/4") drain hose connections.

Temperature
Ambient, 2°C (35°F) to 52°C (125°F). Sample, -3° C (26°F) to 52° C (125°F).

Enclosure
Electronics enclosure designed for NEMA 4X compliance, watertight and corrosion resistant service.

External Alarms
Three electromechanical relays, user configurable through the keypad for High, Low, System Warning, System Failure alarms or any combination of these alarms. Relay contacts are N.O. or N.C. and are supplied unpowered. Contacts rated 5 amps at 250 VAC or 5 amps at 30 VDC. Connections are made at a convenient terminal strip.

Electrical Requirements
Analyzer and recorders require 120-volt +/- 10% or 240-volt +/- 10%, 50/60 Hz, single phase.

Power Consumption
Analyzer, 2 amps at 120 V, 1 amp at 240 V; recorders 15 VA each.

Access Code
Dual 3-digit codes for the operator and supervisor can be entered via the keypad if desired. This prevents unauthorized access to the operating parameters.

Keypad and Display
Control panel contains a 4-digit, sunlight readable LCD numeric display and 16- character alphanumeric display. There are five display menus: main, setup, input/ output, diagnostics and test. These are accessed through the keypad.

Mounting
Analyzer unit, with or without circular chart or strip chart recorder mounted in modular, structural foam ABS cabinet or supplied separately for wall or control panel mounting.

Accessories Furnished
Y-strainer and manual throttling valve for sample waterline. Potassium Iodide for total residual measurement, tube of grit, pH test papers, instruction book. Modular arrangement has pre-piped waterline. Inaddition, for potable or cooling water, 15 l (4 gal) of pH 4 buffer; for wastewater, 15 l (4 gal) of pH4 buffer and 6 oz. of detergent. For Chlorine Dioxide orPotassium Permanganate measurement, a 2-month supply of Ammonium Sulfate to screen out free Chlorine interference.

Optional Accessories

Recorders (supplied with 400-24 hour or 100-7 day circular charts and one year's supply of fiber tip pens) Metering pump for sample line dosing system, amperometric titrator for calibration, sample pump (if sample pressure is less than 0.3 bar; 5 psi), spare reference junction, door lock for analyzer enclosure, Carbon Dioxide gas reagent system, scale for readout of remaining Carbon Dioxide gas reagent supply.

Circular Chart Recorder
This microprocessor based, servo operated recorder is designed for accuracy and dependability. It has a synchronous chart drive motor with speeds selectable for 24 hour or 7 day operation. The chart drive assembly is constructed to give correct alignment when charts are replaced. Digital electronics convert residual input signals into precise mechanical positions. An AC servo motor drives the pen arm directly for accurate input signal tracking and reliable pen motion. Accuracy is +/ 0.5% of span; span step response time is only 9-10 seconds. The recorder case, for wall or panel mounting, is rugged plastic with a gasketed door. Wiring is connected at a convenient terminal strip. The fiber tip pens are the disposable type.

Dimensions
Modular cabinet
1734 mm H x 699 mm W x 406 mm D
(68-1/4"H x 27-1/2"W x 16"D)
Analyzer only (for wall mounting)
381 mm H x 559 mm W x 279 mm D
(15"H x 22"W x 11"D)

Shipping Weight
In cabinet, 91 kgs (200 lbs); wall-mounted analyzer only, 34 kgs (75 lbs).

Wallace & Tiernan and Micro/2000 are trademarks of Siemens, it's subsidiaries or affiliates. NEMA is a trademark of the National Electrical Manufacturer's Association.

The information provided in this brochure contains merely general descriptions or characteristics of performance which in case of actual use do not always apply as described or which may change as a result of further development of the products. An obligation to provide the respective characteristics shall only exist if expressly agreed in the terms of contract.

Siemens
Water Technologies
1901 West Garden Road
Vineland, NJ 08360
www.siemens.com/wallace-tiernan
wtus.water@siemens.com

Lit. No.: WT.050.505.000.UA.PS.0607
Tel: 856.507.9000
Fax: 856.507.4125
Subject to change without prior notice
©2007 Siemens Water Technologies Corp.

MICRO/2000®
RESIDUAL ANALYZER

BOOK NO. IM 50.505AA UA ISSUE B

EQUIPMENT SERIAL NO. _____

DATE OF START-UP _____

START-UP BY _____

Prompt service available from nationwide authorized service contractors.

ORDERING INFORMATION

In order for us to fill your order immediately and correctly, please order material by description and part number, as shown in this book. Also, please specify the serial number of the equipment on which the parts will be installed.

WARRANTY

Seller warrants for a period of one year after shipment that the equipment or material of its manufacture is free from defects in workmanship and materials. Corrosion or other decomposition by chemical action is specifically excluded as a defect covered hereunder, except this exclusion shall not apply to chlorination equipment. Seller does not warrant (a) damage caused by use of the items for purposes other than those for which they were designed, (b) damage caused by unauthorized attachments or modifications, (c) products subject to any abuse, misuse, negligence or accident, (d) products where parts not made, supplied, or approved by Seller are used and in the sole judgement of the Seller such use affects the products' performance, stability or reliability, and (e) products that have been altered or repaired in a manner in which, in the sole judgement of Seller, affects the products' performance, stability or reliability. **SELLER MAKES NO OTHER WARRANTY OF ANY KIND, AND THE FOREGOING WARRANTY IS IN LIEU OF ALL OTHER WARRANTIES, EXPRESS OR IMPLIED, INCLUDING ANY WARRANTY OF MERCHANTABILITY OR OF FITNESS OF THE MATERIAL OR EQUIPMENT FOR ANY PARTICULAR PURPOSE EVEN IF THAT PURPOSE IS KNOWN TO SELLER.** If Buyer discovers a defect in material or workmanship, it must promptly notify Seller in writing; Seller reserves the right to require the return of such defective parts to Seller, transportation charges prepaid, to verify such defect before this warranty is applicable. In no event shall such notification be received by Seller later than 13 months after the date of shipment. No action for breach of warranty shall be brought more than 15 months after the date of shipment of the equipment or material.

LIMITATION OF BUYER'S REMEDIES. The **EXCLUSIVE REMEDY** for any breach of warranty is the replacement f.o.b. shipping point of the defective part or parts of the material or equipment. Any equipment or material repaired or replaced under warranty shall carry the balance of the original warranty period, or a minimum of three months. Seller shall not be liable for any liquidated, special, incidental or consequential damages, including without limitation, loss of profits, loss of savings or revenue, loss of use of the material or equipment or any associated material or equipment, the cost of substitute material or equipment, claims of third parties, damage to property, or goodwill, whether based upon breach of warranty, breach of contract, negligence, strict tort, or any other legal theory; provided, however, that such limitation shall not apply to claims for personal injury.

Statements and instructions set forth herein are based upon the best information and practices known to U.S. Filter/Wallace & Tiernan, Inc., but it should not be assumed that every acceptable safety procedure is contained herein. Of necessity this company cannot guarantee that actions in accordance with such statements and instructions will result in the complete elimination of hazards and it assumes no liability for accidents that may occur.

USFilter
WALLACE & TIERNAN PRODUCTS
1901 West Garden Road, Vineland, NJ 08360

INTRODUCTION

This instruction book provides installation, operation, and maintenance instructions for the U.S. Filter's Wallace & Tiernan Products (USF/W&T) Micro/2000® Analyzer.

The Micro/2000 Analyzer is designed to measure chlorine, chlorine dioxide, potassium permanganate, and ozone residual in water. The analyzer consists of two sections: the "wetside" containing the electrochemical cell and the reagent feed system, and the electronics side, housing the CPU, digital display, and keypad. This equipment continuously analyzes a water sample stream, displaying the measured residual in mg/L; outputs a 4-20mA output signal proportional to the measured residual; and provides various status indicating relay outputs. Setup procedures enable configuring for various requirements and self-diagnostic features aid in troubleshooting. The Analyzer is available for wall mounting or premounted in a free-standing module. To facilitate operation in water prone to biological growth, a relay output is provided to control periodic "dosing" of the sample line with a cleaning agent (e.g., chlorine) to eliminate growth in the line.

An optional paper chart recorder is available, and may also be mounted inside the free-standing module, or wall mounted. A separate instruction book is provided with the recorder.

NOTE: Due to several available variations of this equipment, this instruction book is organized to cover the most complex variation. Disregard information not applicable to your particular system.

NOTE: When unpacking, check all items against the packing list to ensure parts are not discarded with packing material. Whenever possible, unpack the equipment at the installation site.

NOTE: When ordering material always specify model and serial number of apparatus.

Table Of Contents

Very Important Safety Precautions ..... SP-1,-2,-3, -4
Notes On Protective Equipment & Clothing 1.010-6
Regional Offices 1.010-1
Technical Data ..... Section 1
Installation ..... Section 2
Operation ..... Section 3
Service ..... Section 4
Illustrations ..... Section 5
Spare Parts List ..... Section 6

VERY IMPORTANT SAFETY PRECAUTIONS

This and the following pages titled "Very Important Safety Precautions" provide, in brief, information of urgent importance relative to safety, installation, operation, and maintenance of this equipment.

WARNING

TO AVOID POSSIBLE SEVERE PERSONAL INJURY OR EQUIPMENT DAMAGE, OBSERVE THE FOLLOWING:

THIS EQUIPMENT SHOULD BE INSTALLED, OPERATED, AND SERVICED ONLY BY TRAINED, QUALIFIED PERSONNEL WHO ARE THOROUGHLY FAMILIAR WITH THE ENTIRE CONTENTS OF THIS INSTRUCTION BOOK.

MAKE NO CONNECTION THAT MIGHT PERMIT A POTABLE WATER SYSTEM TO BECOME CONTAMINATED. CONSULT YOUR LOCAL HEALTH CODES AND U.S. PUBLIC HEALTH SERVICE BULLETIN #957 (AVAILABLE FROM THE SUPERINTENDENT OF DOCUMENTS, WASHINGTON, D.C.) FOR ADDITIONAL INFORMATION.

HANDLE IN ACCORDANCE WITH MANUFACTURER'S RECOMMENDATIONS. DO NOT MIX WITH OTHER CHEMICALS. DISPOSE OF ANY CHEMICALS IN ACCORDANCE WITH ALL APPLICABLE FEDERAL, STATE, AND LOCAL ENVIRONMENTAL REGULATIONS.

TO ENSURE PROPER AND SAFE OPERATION OF THIS EQUIPMENT, USE ONLY USF/W&T LISTED PARTS EXCEPT FOR THOSE COMMERCIALLY AVAILABLE PARTS THAT ARE IDENTIFIED BY COMPLETE DESCRIPTION ON PARTS LIST. THE USE OF UNLISTED PARTS CAN RESULT IN EQUIPMENT MALFUNCTIONS, CAUSING POSSIBLE SEVERE PERSONAL INJURY.

PH4 BUFFER AND ACETIC ACID WILL SEVERELY IRRITATE EYES AND CAUSE CHEMICAL BURNS TO SKIN. ALWAYS WEAR APPROPRIATE PROTECTIVE EQUIPMENT DURING HANDLING. WHEN DILUTING ACID, ALWAYS POUR THE ACID INTO THE WATER, NEVER POUR WATER INTO ACID. USE CAUTION WHEN DISCONNECTING THE REAGENT TUBING AND AVOID CONTACT WITH ANY FLUID THAT DRIPS FROM THE OPEN END. IT IS THE RESPONSIBILITY OF THE USER OF THE EQUIPMENT TO OBTAIN AND FOLLOW THE SAFETY PRECAUTIONS OF THE MANUFACTURER OF THE HAZARDOUS MATERIAL.

TO AVOID ELECTRICAL SHOCK TURN OFF POWER BEFORE SERVICING.

TO AVOID ELECTRICAL SHOCK OR DAMAGE TO EQUIPMENT, AVOID CONTACTING CIRCUIT BOARD COMPONENTS WHILE MAKING ADJUSTMENTS.

TROUBLESHOOTING AND HARDWARE CALIBRATION OF THE ANALYZER IS PERFORMED WITH A MULTI-METER. ONLY PERSONNEL WHO ARE TRAINED WITH THIS EQUIPMENT AND WHO HAVE A COMBINED KNOWLEDGE OF PROPER SAFETY PRECAUTIONS AND USF/W&T EQUIPMENT SHOULD PERFORM ANY TROUBLESHOOTING AND/OR TESTING.

VERY IMPORTANT SAFETY PRECAUTIONS (CONT'D)

HYDROCHLORIC ACID AND MURIATIC ACID WILL SEVERELY IRRITATE EYES AND CAUSE CHEMICAL BURNS TO SKIN. ALWAYS WEAR APPROPRIATE PROTECTIVE EQUIPMENT DURING HANDLING. WHEN DILUTING ACID, ALWAYS POUR THE ACID INTO THE WATER, NEVER POUR WATER INTO ACID. IT IS THE RESPONSIBILITY OF THE USER OF THE EQUIPMENT TO OBTAIN AND FOLLOW THE SAFETY PRECAUTIONS OF THE MANUFACTURER OF THE HAZARDOUS MATERIAL.

CHEMICALS FOR INDUSTRIAL USE: VAPOR MAY BE HARMFUL IF INHALED. MAY BE FATAL IF SWALLOWED. LIQUID MAY CAUSE SEVERE BURNS OF SKIN AND EYES. AVOID CONTACT WITH EYES, SKIN OR CLOTHING. WASH THOROUGHLY AFTER HANDLING. IN CASE OF SPILL, SOAK UP WITH SAND OR EARTH.

INSTALLATION WIRING SHOULD BE PERFORMED BY A QUALIFIED ELECTRICIAN ONLY AND IN CONFORMANCE WITH APPLICABLE CODES.

DO NOT REMOVE THE PUMP OCCLUSION RING WHILE THERE IS ANY WATER PRESSURE AT THE INLET TO THE ANALYZER. IF THE PUMP OCCLUSION RING IS REMOVED WHILE PRESSURE IS APPLIED TO THE PUMP, WATER (POSSIBLY CONTAINING ACID REAGENTS) CAN BE SPRAYED FROM THE DISCHARGE SIDE OF THE PUMP. SPRAYED WATER MAY RESULT IN DAMAGE TO THE EQUIPMENT OR PERSONAL INJURY BECAUSE IT MAY CONTAIN SOME REAGENT OR MAY BE CONTAMINATED.

THE UNIT SHOULD BE POWERED WITH GROUND FAULT INTERRUPT PROTECTION. THE UNIT IS FUSED INTERNALLY FOR THE PROTECTION OF ELECTRICAL/ELECTRONIC COMPONENTS ONLY—THESE FUSES WILL NOT PROTECT THE USER FROM INJURY CAUSED BY ELECTRICAL SHOCK. WHILE ELECTRICAL COMPONENTS ARE SUITABLY ISOLATED FOR NORMAL OPERATION, THE PRESENCE OF WATER OR OTHER POSSIBLY CONDUCTIVE FLUIDS IN COMBINATION WITH DANGEROUS OPERATING VOLTAGE PRESENTS A SHOCK HAZARD THAT IS BEST MINIMIZED BY THE USE OF GROUND FAULT INTERRUPT PROTECTION ON THE MAIN POWER SUPPLY.

TURN OFF THE FLOW TO THE ANALYZER BEFORE REMOVING THE OCCLUSION RING FROM THE METERING PUMP. THE OCCLUSION RING STOPS THE FREE FLOW OF LIQUID THROUGH THE ANALYZER SAMPLE LINES. IF IT IS REMOVED WITH FLOW STILL PRESENT AT THE ANALYZER, PROCESS WATER WILL BE SPRAYED FROM THE PUMP DISCHARGE LINE AND FROM THE CELL TOP. SPRAYED PROCESS WATER CAN CREATE AN ELECTRICAL SHOCK HAZARD DUE TO THE PRESENCE OF DANGEROUS VOLTAGE POWERING THE IMPELLER AND PUMP MOTORS.

DO NOT SERVICE THE METERING PUMP WHILE IT IS TURNING, THE METERING PUMP HAS SUFFICIENT TORQUE TO CAUSE SEVERE PERSONAL INJURY IF HANDS ARE PINCHED IN THE ROTATING PARTS. DISCONNECT THE PUMP MOTOR CONNECTOR BEFORE SERVICING THE PUMP.

VERY IMPORTANT SAFETY PRECAUTIONS (CONT'D)

WEAR RECOMMENDED PROTECTIVE EYEWEAR WHEN SERVICING THE WET COMPONENTS OF THE ANALYZER, PARTICULARLY WHEN SERVICING REAGENTS AND REAGENT LINES. THE ANALYZER USES CHEMICALS THAT CAN CAUSE SEVERE PERSONAL INJURY BY CHEMICAL BURNS ON CONTACT WITH EYES. RINSE ANY AREA OF CONTACT IMMEDIATELY. IF CHEMICALS CONTACT EYES, RINSE EYES AND SEEK IMMEDIATE MEDICAL ATTENTION.

WHEN SERVICING LIQUID REAGENT LINES OR PUMPS, OR REFILLING RESERVOIRS, TURN PUMPS OFF (SEE PARAGRAPH 3.3.3, SHUT-DOWN/RE-START) TO AVOID POSSIBLE SQUIRTING OF REAGENT. OBSERVE ALL SAFETY PRECAUTIONS RECOMMENDED BY THE REAGENT MANUFACTURER OR SUPPLIER.

ALWAYS RECONNECT THE GROUNDING LEADS WHEN REMOVED OR BROKEN. GROUNDING LEADS ARE PROVIDED FOR SAFETY, TO PREVENT INJURY FROM ELECTRICAL SHOCK.

IF IODATE IS IMPROPERLY MIXED WITH ACETIC ACID AND/OR IODIDE, THE SOLUTION MAY BECOME DARK ORANGE OR BROWN, INDICATING THE FORMATION OF IODINE; AVOID (RESULTING) IODINE VAPORS, WHICH MAY BE DIFFICULT TO DETECT (SMELL), BUT THAT CAN CAUSE PHYSICAL HARM ON INHALATION OF CONCENTRATED VAPORS OR PROLONGED INHALATION.

TO AVOID POSSIBLE SEVERE PERSONAL INJURY FROM ELECTRICAL SHOCK, DISCONNECT ALL SOURCES OF POWER BEFORE SERVICING. IN ADDITION TO POWER REQUIRED TO OPERATE THIS UNIT, UNPOWERED RELAY CONTACT CONNECTIONS ARE PROVIDED TO WHICH ADDITIONAL, INDEPENDENT SOURCES OF POWER MAY BE WIRED.

WHEN SERVICE MAY BE REQUIRED TO BE PERFORMED ON THE UNIT WITH POWER CONNECTED, IT SHOULD BE PERFORMED ONLY BY PERSONNEL QUALIFIED TO PERFORM SUCH SERVICE.

DO NOT DISCARD THIS INSTRUCTION BOOK UPON COMPLETION OF INSTALLATION. INFORMATION PROVIDED IS ESSENTIAL TO PROPER AND SAFE OPERATION AND MAINTENANCE.

VERY IMPORTANT SAFETY PRECAUTIONS (CONT'D)

ADDITIONAL OR REPLACEMENT COPIES OF THIS INSTRUCTION BOOK ARE AVAILABLE FROM:

U.S. FILTER'S WALLACE & TIERNAN PRODUCTS
1901 W. GARDEN ROAD
VINELAND, NEW JERSEY 08360
PHONE: (856) 507-9000
FAX: (856) 507-4125

NOTE

Minor part number changes may be incorporated into USF/W&T products from time to time that are not immediately reflected in the instruction book. If such a change has apparently been made in your equipment and does not appear to be reflected in your instruction book, contact your local USF/W&T sales office for information.

Please include the equipment serial number in all correspondence. It is essential for effective communication and proper equipment identification.

NOTES ON PROTECTIVE EQUIPMENT AND CLOTHING

The following Warning appears in several locations in this book. It is general in nature due to the variety of hazardous liquids this equipment is capable of handling.

WARNING: WHEN DEALING WITH HAZARDOUS MATERIAL, IT IS THE RESPONSIBILITY OF THE EQUIPMENT USER TO OBTAIN AND FOLLOW ALL SAFETY PRECAUTIONS RECOMMENDED BY THE MATERIAL MANUFACTURER/SUPPLIER.

It is good general practice to make use of protective equipment when handling any hazardous material.

IT IS RECOMMENDED THAT SUCH PROTECTIVE EQUIPMENT BE USED BY ALL PERSONS SERVICING THIS PUMP, ASSOCIATED PIPING, TUBING, VALVES, AND ACCESSORIES, WHEN THE EQUIPMENT IS HANDLING ANY HAZARDOUS MATERIAL.

1. Goggles, flexible fitting, hooded ventilation (per ANSI Z87.1)	
2. Face Shield (per ANSI Z87.1)	
3. Chemical Apron	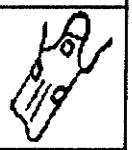
4. Chemical Gloves	

NOTE: (1) ANSI Z87.1 "practice for occupational.....eye and face protection" recommends goggles (#1 above) as the "preferred protection" when handling chemicals that present a hazard from splash, acid burns or fumes; for severe exposure, a face shield (#2 above) over the goggles is recommended.

(2) An eye flushing fountain and a deluge-type shower may be recommended or required by insurance carriers or governmental safety agencies, which should be consulted for specific requirements.

REGIONAL OFFICES

INSTALLATION, OPERATION, MAINTENANCE, AND SERVICE INFORMATION

Direct any questions concerning this equipment that are not answered in the instruction book to the Reseller from whom the equipment was purchased. If the equipment was purchased directly from USFilter's Wallace & Tiernan Products (USF/W&T), contact the office indicated below.

UNITED STATES

1901 West Garden Road
Vineland, NJ 08360
TEL: (856) 507-9000
FAX: (856) 507-4125

CANADA

If the equipment was purchased directly from USF/W&T Canada, contact the nearest office indicated below.

ONTARIO

250 Royal Crest Court
Markham, Ontario
L3R3S1
(905) 944-2800

QUEBEC

243 Blvd. Brien
Bureau 210
Repentigny, Quebec
(514) 582-4266

MEXICO

If the equipment was purchased directly from USF/W&T de Mexico, contact the office indicated below.

Via Jose López Portillo No. 321
Col. Sta. Ma. Cuautepec, Tultitlan
Edo. México 54900
TEL: +52 55 2159 2976 / +52 55 2159 2989
FAX: +52 55 2159 2985

SECTION 1 - TECHNICAL DATA

Residual Ranges	.1, .2, .5, 1, 2, 5, 10, 20, 50 mg/L
Response Time, T90	90 seconds with 2 rpm sample metering pump. 180 seconds with 1 rpm sample metering pump.
Reagent Usage (liquid reagent, per reagent)	5 weeks/gal. with 2 rpm sample metering pump. 10 weeks/gal. with 1 rpm sample metering pump.
Power Requirements	115/230v ± 10%, 60 Hz, 40W External disconnect and GFI protection required.
Customer Wiring Connections	Customer wiring terminal block accepts maximum wire size 12awg copper wire.
Ambient Operating Temperature	35 to 125∝F (2 to 52∝C)
Sample Temperature	26 to 125∝F (-3 to 52∝C)
Sample Flow to the Analyzer (Through the Y-Strainer)	Approximately .1 to 5 gpm or .5 to 24 liters/minute, depending upon application.
Sample Flow (Through the Analyzer)	At less than 5 psi: approximately 0.13 gpm or 0.5 liters/minute.
Relay Outputs	Three electro-mechanical relay outputs, NO and NC contacts with snubber circuits (snubbers can be disabled). Rating: 5A @ 250 Vac/5A @ 30 Vdc.
4-20 mA Analog Output Signal	Isolated-600 ohm maximum loop resistance.
Electronics Enclosure Rating	NEMA 4X, UL94VO-5VA.
Internal Fuse Ratings	
Electronics/CPU	115v-.2A, 250v, 5 x 20mm, Fast Acting Fuse -OR- 230v-.1A, 250v, 5 x 20mm, Fast Acting Fuse
Motors	115v or 230v - .25A, 250v, 1/4" X 1-1/4", SLO-BLO Fuse

SECTION 2 - INSTALLATION

List Of Contents

	PARA./DWG. NO.
General	2.1
Location	2.2
Unpacking	2.3
Mounting	2.4
Wall Mounted	2.4.1
Panel Mounted	2.4.2
Analyzer Module	2.4.3
Installing Reagent Hardware	2.5
Sample Pump	2.6
Water Sample and Sample Line Requirements	2.7
Wall and Panel Mounted	2.7.1
Modular Cabinet	2.7.2
Drain Line	2.8
Wall and Panel Mounted	2.8.1
Modular Mounted	2.8.2
Installation Wiring	2.9
Power Supply – Mains	2.9.1
Relay Outputs	2.9.2
Sample-Line Dosing Control Wiring	2.9.3
mA Output	2.9.4
Illustrations	
Dimensions - Wall Mounted Arrangement	50.505.100.010
Dimensions - Modular Arrangement	50.505.100.020
Typical Installation	50.505.110.010
Typical Installation	50.505.110.040
Installation Wiring	
Wall Mounted	50.505.130.010
Wall Mounted Analyzer and Wall Mounted Recorder	50.505.130.020
Module Mounted	50.505.130.030
Analyzer in Module and Wall Mounted Recorder	50.505.130.040
Analyzer and Circular Chart Recorder in Module	50.505.130.050
Analyzer and Strip Chart Recorder in Module	50.505.130.060

2.1 General

Installation of the analyzer typically consists of the following:

- Mounting the unit.
- Plumbing to provide the water sample to be analyzed.
- Plumbing to provide a drain connection for analyzer sample discharge.
- Wiring to electrical power (main supply).
- Wiring of mA and relay outputs.
- Plumbing and wiring of dosage pump, if used for sample-line dosing.

2.2 Location

Select a location protected from direct sun, rain, snow, ice, etc., and that provides convenient access for routine service. To minimize analyzer response time (i.e., lag time), locate the unit to minimize sample-line length.

CAUTION: To avoid possible equipment damage if unit is mounted outside, do not mount in direct sunlight as this may cause the electronics to become overheated.

2.3 Unpacking

NOTE: When unpacking, check all items against the packing list to ensure parts are not discarded with packing material. Whenever possible, unpack the equipment at the installation site.

a. Remove unit from shipping carton.

b. Open front door and remove any ties, padding, or fillers used for shipping protection.

c. On modular cabinets, remove the shipping crate and unbolt the wooden supports located at the four corners of the module base.

CAUTION: To prevent damage to module, replace shim washers underneath module after plywood feet are removed.

d. Save the black washers (PB2018) for reinstallation when mounting module to floor.

e. Check for loose piping or electrical connections.

2.4 Mounting

2.4.1 Wall Mounted (See Dwg. 50.505.100.010)

a. Mount the unit using the four 3/8-inch diameter mounting holes (5/16-inch diameter bolts).

b. For ease of mounting, remove the two brackets from the sides of the analyzer and mount to the wall first.

c. Place the unit into position, resting on the support ribs.

2.4.2 Panel Mounted

a. Mount the analyzer in a panel up to 1/2-inch thick. The dimensions for the cutout are shown in Figure 2.1.

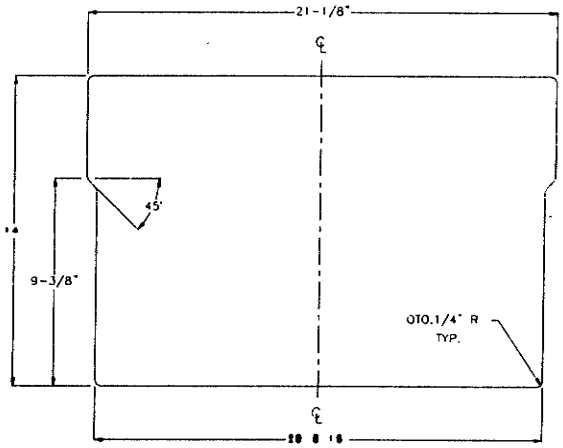

Figure 2.1 - Dimensions of Panel Cut-Out

b. With the panel cut to the dimensions indicated, remove the bolts and washers retaining the mounting brackets to the analyzer.

c. Install the unit through the front of the panel and loosely reinstall the mounting brackets and hardware.

d. With the bolts loose, slide the brackets down and toward the panel to remove all play.

e. Tighten all four mounting bolts.

2.4.3 Analyzer Module (See Dwg. 50.505.100.020)

a. Position the module for mounting on a rigid, flat surface equal to or larger than the module base.

b. Ensure that adequate access is available for routine maintenance and service.

c. Use the holes located at the four corners of the module to secure the unit with 3/8-inch bolts.

d. Save the four black washers (PB2018) used for shipment. Reuse the washers between the bottom of the module and the mounting surface.

CAUTION: Failure to use washers may result in the module being out of level and may cause possible structural damage.

2.5 Installing Reagent Hardware (See Dwgs. 50.505.000.010 and 50.505.010.010)

WARNING: TO AVOID POSSIBLE SEVERE PERSONAL INJURY OR EQUIPMENT DAMAGE, DO NOT SERVICE THE METERING PUMP WHILE POWER IS APPLIED TO THE PUMP. THE MOTOR HAS ENOUGH TORQUE TO CAUSE SEVERE PAIN AND INJURY IF FINGERS ARE CAUGHT IN THE PUMPING MECHANISM.

WARNING: TO AVOID POSSIBLE SEVERE PERSONAL INJURY OR EQUIPMENT DAMAGE, DO NOT REMOVE THE PUMP OCCLUSION RING WHILE THERE IS ANY WATER PRESSURE AT THE INLET TO THE ANALYZER. IF THE PUMP OCCLUSION RING IS REMOVED WHILE PRESSURE IS APPLIED TO THE PUMP, WATER (POSSIBLY CONTAINING ACID REAGENTS) CAN BE SPRAYED FROM THE DISCHARGE SIDE OF THE PUMP. SPRAYED WATER MAY RESULT IN DAMAGE TO THE EQUIPMENT OR PERSONAL INJURY AS IT MAY CONTAIN SOME REAGENT OR MAY BE CONTAMINATED.

NOTE: It is recommended that water-flow to the analyzer should be blocked and the reagent reservoirs are not filled until installation is complete. The metering pump may be operated/tested without reagents or water without damage; however, it is advisable to pour enough water into the cell to cover the impeller (mixer) before powering the unit to prevent damage to the impeller shaft seal from running the unit dry.

On modular arrangements, reagent bottle mounting brackets and bottles are preassembled. When reagent parts are ordered for use with a wall-mounted analyzer, hardware is supplied for panel mounting (two of each: 1/4-inch bolts with nuts and washers); however, due to varying requirements, hardware for wall mounting is not included.

Before attaching the reagent bottle mounting brackets to mounting surface, install the retaining strap through the slots in the bracket. The brackets should be located within four feet of the analyzer.

- Install the reagent tubing as follows:

  Uncoil the reagent tubing segment(s) (one per liquid reagent) and remove the rigid tubing segments (1/32-inch O.D., 13-inch long) from the protective packaging. Using two of the three tubing segments, firmly insert one rigid tube into one end of each piece of flexible tubing. Then insert the exposed rigid end into the small hole in the cap of each of the reagent bottles mounted in the bottle brackets. Then place the other end of the tubing through the holes located in the back/bottom of the wetside of the analyzer and pull the loose tubing into the analyzer enclosure.

- For information on installing or replacing reagent tube units, see paragraph 4.4.6, Pump Tubing Units Replacement.

- Tubing Connections:

  Cut the excess reagent tubing and connect to the reagent fittings at the inlet to the reagent tube units.

  Install the "T" fitting provided in the tubing at the inlet to (bottom of) the analyzer metering pump. To do this, cut the tubing about one inch from the entrance to the pump and reconnect the tubing using the "T" fitting. This will leave the middle (small) end of the fitting unused.

- If two reagent tube units (two liquid reagents) are used:

  Install two, one-inch segments of the reagent tubing, cut from the eight-foot segment of reagent tube, on the fittings at the discharge (upper) end of the reagent tube units and join the two segments with the "Y" fitting provided.

  Using approximately seven inches of reagent tubing, connect the reagent discharge fitting to the tee fitting at the pump sample intake. Run

the tubing behind the panel unit and attach the other end to the remaining (small) end of the "T" fitting at the inlet of the metering pump.

2.6 Sample Pump

WARNING: TO AVOID POSSIBLE SEVERE PERSONAL INJURY OR EQUIPMENT DAMAGE, MAKE NO CONNECTION THAT MIGHT PERMIT A POTABLE WATER SYSTEM TO BECOME CONTAMINATED. CONSULT YOUR LOCAL HEALTH CODES AND U.S. PUBLIC HEALTH SERVICE BULLETIN #957 (AVAILABLE FROM THE SUPERINTENDENT OF DOCUMENTS, WASHINGTON, D.C.) FOR ADDITIONAL INFORMATION.

Where the supply water pressure is not sufficient, a pump must be installed to deliver a sample of water to be analyzed. The following guidelines are recommended for installations where a pump is needed.

The pump should be sized to provide the water sample flow pressure per analyzer sample and sample line requirements.

Locate intake point of the pump to provide a representative sample. Rigidly fix and position the intake away from the walls or bottom of the chamber or the pipe containing the main flow to be analyzed. The sampling point should allow for adequate contact time and mixing in the process monitored to ensure a stable value for measurement.

2.7 Water Sample and Sample Line Requirements

Actual requirements will vary with the equipment application, but the following should be used as general guidelines. Sample plumbing design is the most important part of a reliable monitoring system.

A well designed sampling system minimizes response time and prevents fouling of the sample line plumbing and the analyzer.

Response time is minimized by locating the analyzer close to the point of sample take-off and by designing for a moderately high flow velocity in the sample line, one to 10 ft/sec. Flow velocity also helps in reducing sample line deposits.

Plastic pipe or tubing (PVC, ABS, or polyethylene) is preferred for sample line plumbing due to its corrosion resistance, lack of residual demand, and smooth surface finish, which resists deposits.

Sample plumbing pipe (or tubing) size is a function of the available pressure at the sample point (or sample pump discharge) along with the sample line length and flow velocity required.

- Potable Water

  Four characteristics typical of potable water are that, generally, it is low in particulates, it is available at reasonably high pressure (>15 psi), its use should be minimized, and the analyzer may be mounted within 25 feet of the sample point. In such applications, the sample may be run through 1/4-inch pipe or tubing and the bypass flow on the Y-strainer may be shut. It should be opened only intermittently to flush the strainer element and sample line. Then only (approximately) 500 mL/min of the sample is required, which is the internal analyzer sample requirement.

- Wastewater

  Frequently, wastewater is high in particulates and biological growth potential. The sample is taken from open channel flow, with no pressure available at the sample point. Additionally, the analyzer must frequently be mounted a significant distance from the sample point (inside and protected from weather). Here, a sample pump is required and the Y- strainer bypass flow valve should be open to allow continuous flushing of the strainer element. A high flow, low pressure, open impeller-type pump works well in this environment. Typical systems use 1/2-inch pipe or tubing that bypasses 2 gpm through the Y-strainer or 3/4-inch pipe that bypasses 5 gpm. This results in a flow velocity of about four feet per second and a pressure drop of about 4 psi per 100 ft of sample line.

  Wastewater will frequently exhibit high biological growth potential; therefore, the sample line may need to be treated with a cleaning (biocidal) agent (typically chlorine) to inhibit growth in the sample line. Biological growth may clog fittings in the sample line or analyzer and consume (process) chlorine residual during the sample transit time in the sample line. For sample line dosing, the cleaning agent is periodically injected into the sample line near the sample intake point.

2.7.1 Wall and Panel Mounted (See Dwg. 50.510.110.010)

A self-flushing, 1/2-inch Y-strainer is provided and should be located at the analyzer. Valves are provided to be installed on the Y-strainer bypass discharge to control bypass flow and at the filtered discharge from the Y-

strainer to the 1/4-inch sample inlet at the base of the analyzer enclosure to control analyzer sample flow.

2.7.2 Modular Cabinet (See Dwg. 50.510.110.010)

Modular arrangements of the analyzer come with a prepiped Y-strainer. Analyzer discharge and Y-strainer bypass flow are connected to a drain chamber at the module base. The sample inlet connection is 3/4-inch npt and is located on the rear of the module.

2.8 Drain Line

2.8.1 Wall and Panel Mounted (See Dwg. 50.510.110.010)

The analyzer enclosure is equipped with a hose adapter drain connection for 1-1/4-inch hose. The fitting is shipped packaged within a cloth bag inside the left portion of the enclosure.

a. To install the fitting, insert it through the large opening in the bottom of the analyzer enclosure. It should snap into place when fully seated.

b. Slip 1-1/4-inch drain hose over the end of the drain fitting and run hose to a waste drain.

c. Connect a hose from the Y-strainer bypass valve to the waste drain.

d. Inside the analyzer, insert the analyzer bypass tubing and cell discharge tubing (both 1/4-inch OD translucent) into the drain fitting.

2.8.2 Modular Mounted (See Dwg. 50.510.110.010)

Modular arrangements contain a drain chamber, prepiped to the analyzer enclosure drain fitting, and Y-strainer bypass. The drain chamber has a 1-1/4-inch female npt connection for drain plumbing.

2.9 Installation Wiring (See Dwgs. 50.505.130.010, .020, .030, .040, .050, And .060)

WARNING: TO AVOID POSSIBLE SEVERE PERSONAL INJURY OR EQUIPMENT DAMAGE, INSTALLATION WIRING SHOULD BE PERFORMED ONLY BY A QUALIFIED ELECTRICIAN AND IN CONFORMANCE WITH APPLICABLE CODES.

CAUTION: Check 115/230 power selector switch on power supply board and jumpers on motor adapter board before connecting power

to the unit. Incorrect selection may cause faulty operation or may damage the unit.

NOTE: Field wiring must conform to local electrical codes.

Installation wiring is made to the terminal block located in the rear of the electronics enclosure on wall-mounted units or in the junction box in the rear of the module on module-mounted units.

For connection to the terminal block, 12 AWG solid or stranded copper wire is the maximum recommended size.

2.9.1 Power Supply - Mains

An external power disconnect must be provided to isolate the unit from mains power when servicing the unit. No power switch is provided within the analyzer or module.

WARNING: TO AVOID POSSIBLE SEVERE PERSONAL INJURY OR EQUIPMENT DAMAGE, THE UNIT SHOULD BE POWERED WITH GROUND FAULT INTERRUPT PROTECTION. THE UNIT IS FUSED INTERNALLY FOR THE PROTECTION OF ELECTRICAL/ELECTRONIC COMPONENTS ONLY—THESE FUSES WILL NOT PROTECT THE USER FROM INJURY CAUSED BY ELECTRICAL SHOCK. WHILE ELECTRICAL COMPONENTS ARE SUITABLY ISOLATED FOR NORMAL OPERATION, THE PRESENCE OF WATER OR OTHER POSSIBLY CONDUCTIVE FLUIDS IN COMBINATION WITH DANGEROUS OPERATING VOLTAGE, PRESENTS A SHOCK HAZARD THAT IS BEST MINIMIZED BY THE USE OF GROUND FAULT INTERRUPT PROTECTION ON THE MAIN POWER SUPPLY.

The analyzer is designed to operate on single phase 115 or 230 volt ac ± 10%, 60 Hz.

The operating voltage for the electronics is switch selected by a clearly labeled ("115" or "230") switch on the power supply circuit board inside the analyzer.

The motors driving the impeller and metering pump, on the wetside, are separately powered by the Motor Adapter Board, located in the electronics enclosure, and also require selection of the operating voltage. There are two jumpers that must each be positioned for 115v or 230v operation.

The electronics and the pump and impeller motors are protected, separately, by two internal fuses. See the Section 1 - Technical Data for fuse ratings.

CAUTION: To avoid possible equipment damage, verify that the voltage selectors for the electronics and for the motors are in the proper positions and that the proper fuses are installed before making connection to ac line.

2.9.2 Relay Outputs

Three output relays, designated "A", "B", and "C", are available for external connection. As delivered from the factory, these relays are assigned to High Alarm/System Alarm, Low Alarm/System Alarm, and Dosing Control functions, respectively. The conditions indicated by a respective relay output are customer configurable through the menu interface (one relay may be set to indicate any of several conditions). This allows the customer to select the functions most important to them or change the functions or sense of the relays without re-wiring. These selections must be consistent with the installed wiring.

One common (COM), one normally open (NO), and one normally closed (NC) contact are available for each relay. All contacts are unpowered. Power to the contacts is provided by customer wiring.

The "sense" (normally energized or normally de-energized) of each relay is also user configurable within the software.

Refer to paragraph 3.2, User Interface - Software Operation, for more information about reconfiguring relay outputs.

Each of the relay contacts is wired with a snubber circuit that can be disabled by removing the associated jumper on the power supply board. Snubber circuits are provided to protect the relay contacts from voltage spikes on opening and closing, but leakage current though the snubber circuit can be enough to energize low power electronic devices (erratically)—bypassing the relay contacts. If this occurs, the associated snubber should be disabled. Remove the snubber from the circuit by removing the associated jumper on the power supply board.

CONTACT	JUMPER
Relay "A",NC	J3
Relay "A",NO	J4
Relay "B",NC	J5
Relay "B",NO	J6
Relay "C",NC	J7
Relay "C",NO	J8

2.9.3 Sample-Line Dosing Control Wiring

If sample-line dosing is used, one of the relay outputs must be configured to this function (the default is relay "C"). This relay is used to activate an external dosing means (e.g., a pump) that, when activated, delivers the cleaning agent into the sample line. (See Section 1 - Technical Data under Relay Outputs.) Wire the device so that if power is lost to the analyzer or the wiring connection is broken, the dosing device is de-activated.

2.9.4 mA Output

The analyzer provides an isolated, 4 to 20 mA output proportional to the measured residual, over the measuring range to which the analyzer is configured. This output can operate through a 600 ohms (maximum) impedance.

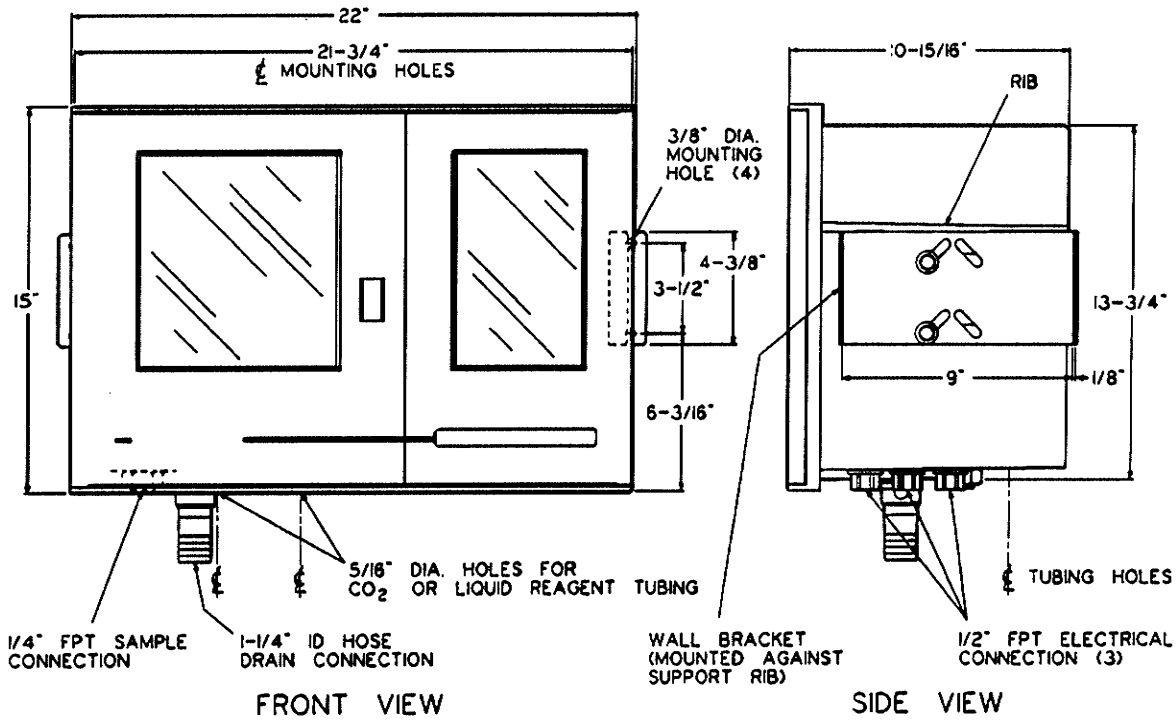

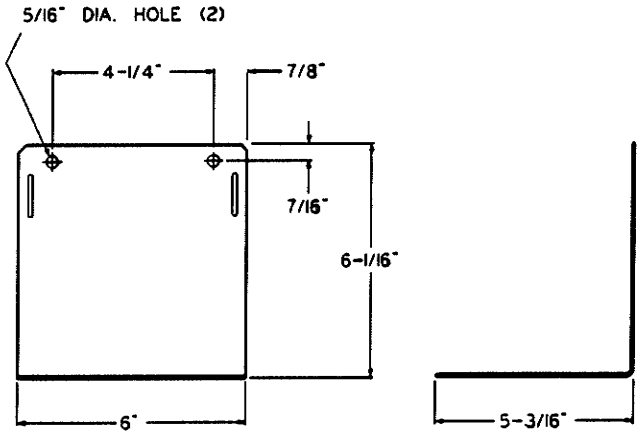

WALL MOUNTING BRACKET
FOR REAGENT BOTTLE

RESIDUAL ANALYZER - DIMENSIONS
Wall-Mounted Arrangement

50.505.100.010
ISSUE 0 4-94

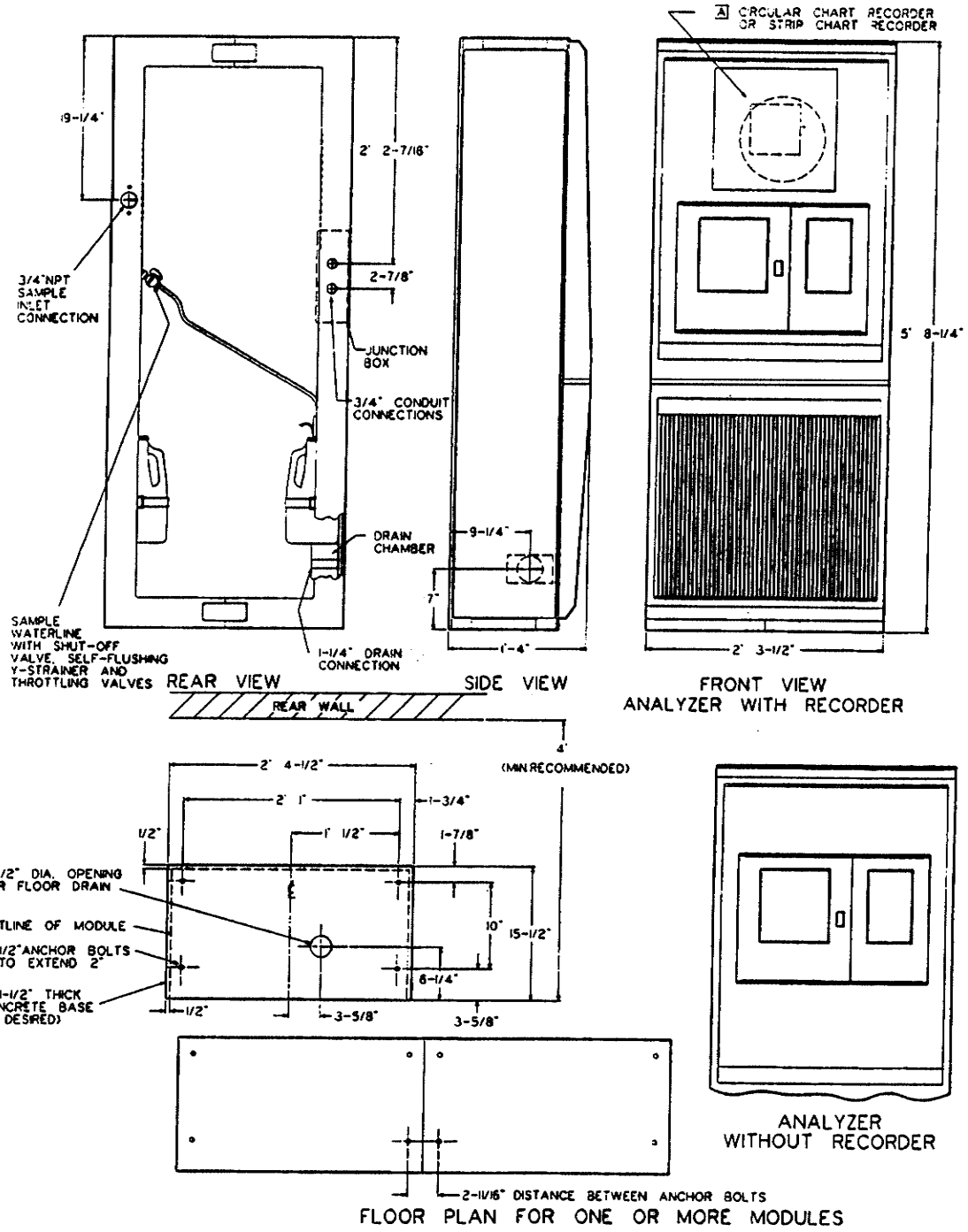

NOTE: (X) NOT FURNISHED BY U.S. FILTER / W & T.

[A] ITEMS FURNISHED ONLY IF SPECIFICALLY LISTED IN QUOTATION.

RESIDUAL ANALYZER - DIMENSIONS
Modular Arrangement

50.505.100.020
ISSUE 0 2-98

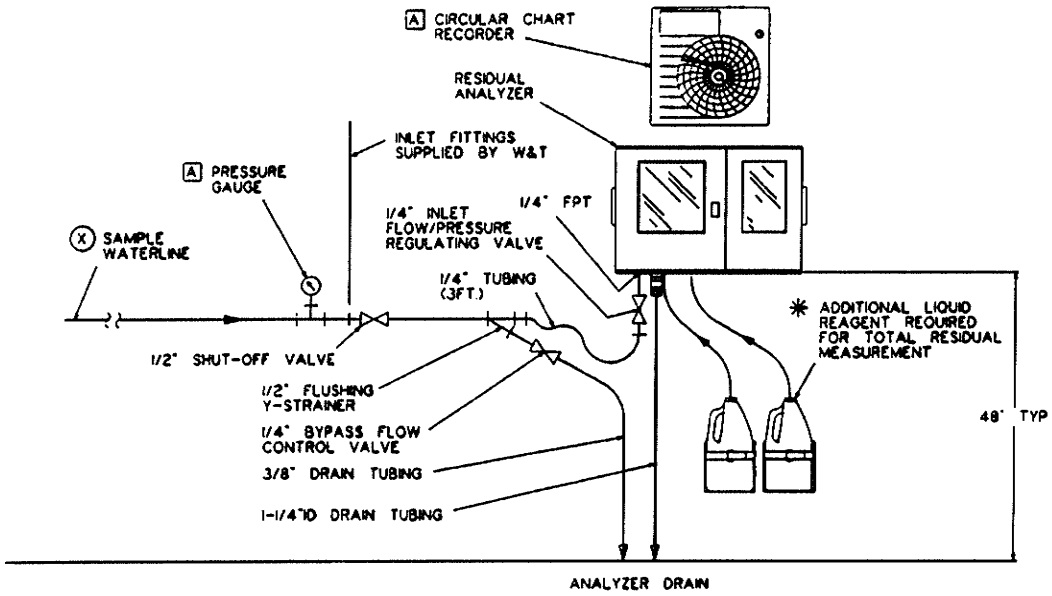

WALL MOUNTED ARRANGEMENT

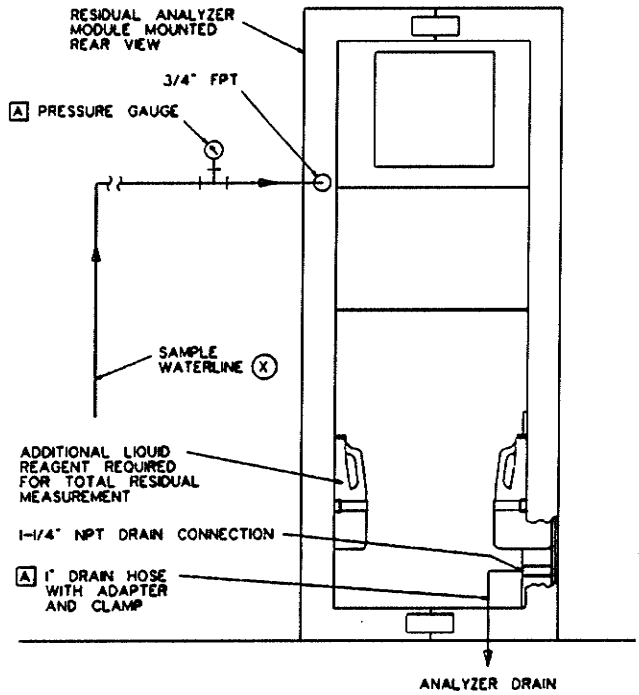

MODULE ARRANGEMENT

NOTE: (X) NOT FURNISHED BY U.S. FILTER / W & T.
[A] ITEMS FURNISHED ONLY IF SPECIFICALLY LISTED IN QUOTATION.

RESIDUAL ANALYZER - TYPICAL INSTALLATION
Residual Analysis Using Liquid Reagent

50.505.110.010
ISSUE 0 2-98

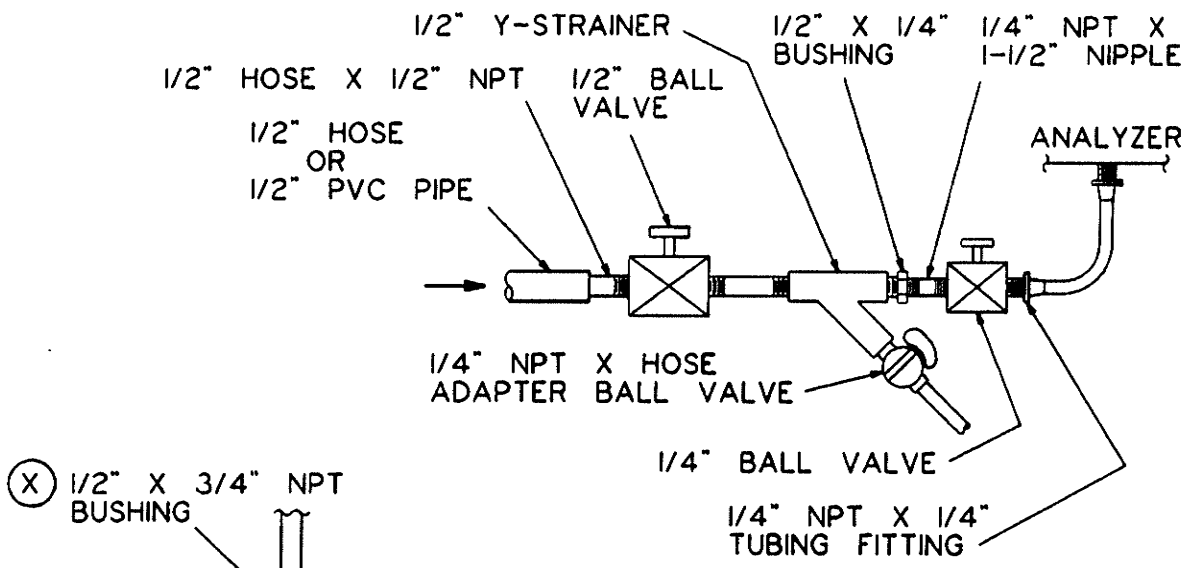

WATER LINE

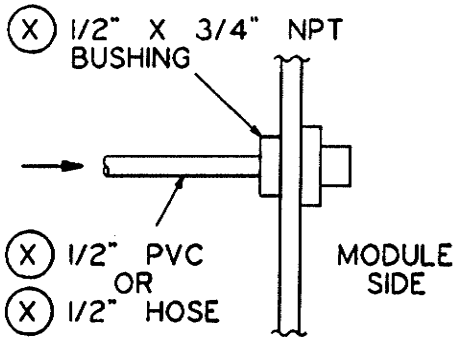

MODULE

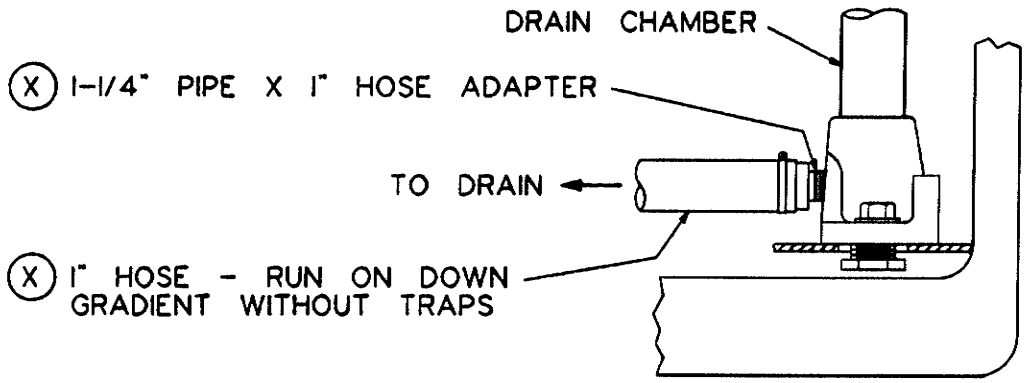

DRAIN CHAMBER

NOTE: (X) NOT FURNISHED BY U.S. FILTER / W & T.
[A] ITEMS FURNISHED ONLY IF SPECIFICALLY LISTED IN QUOTATION.

WATER LINE AND DRAIN CHAMBER - TYPICAL INSTALLATION

50.505.110.040
ISSUE 0 2-98

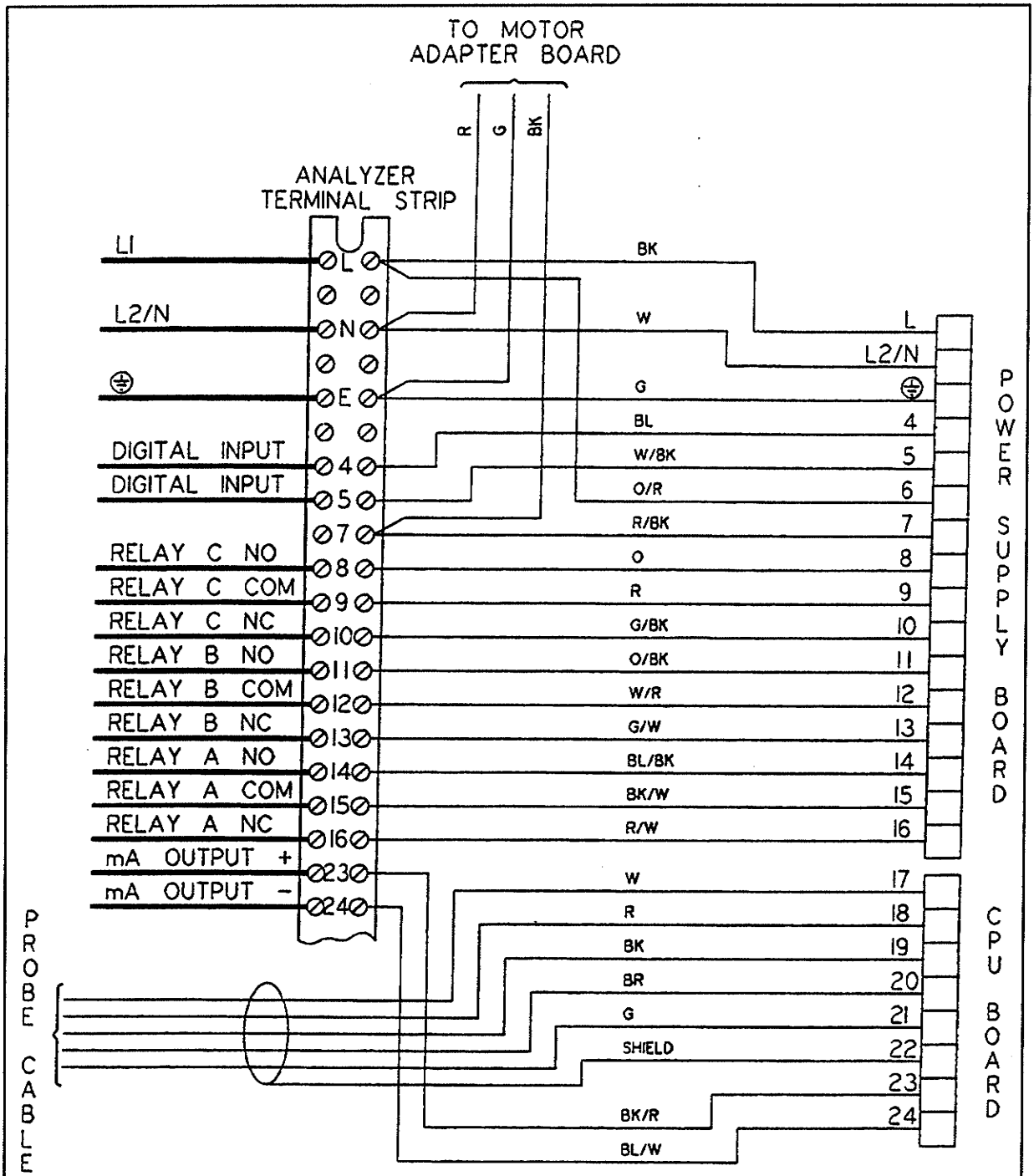

NOTE: —— FIELD WIRING (NOT BY USF/W&T) MUST CONFORM TO LOCAL ELECTRICAL CODES.
—— WIRING BY USF/W&T.

RESIDUAL ANALYZER - INSTALLATION WIRING
Wall-Mounted

50.505.130.010
ISSUE 3 2-98

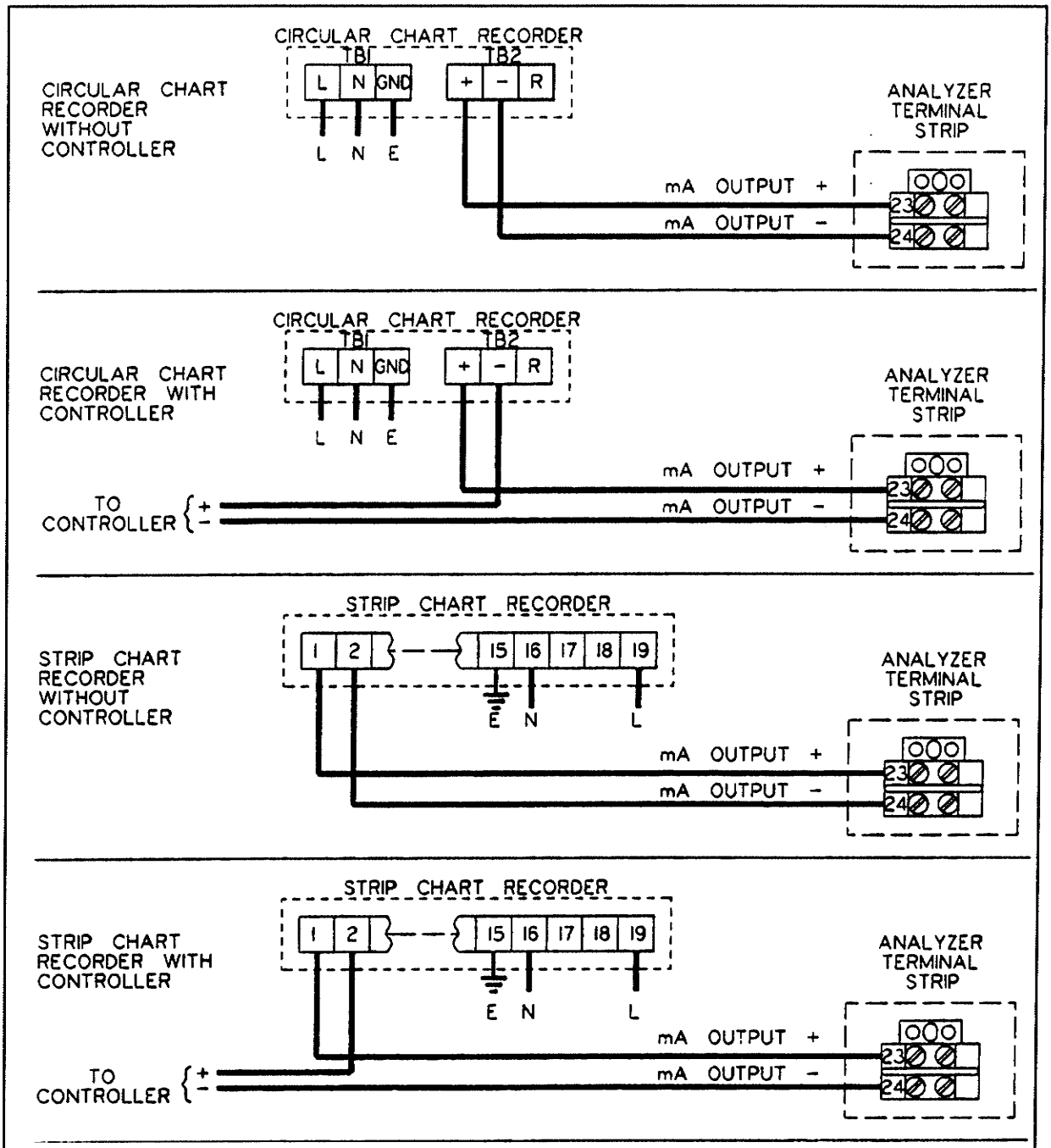

NOTE: —— FIELD WIRING (NOT BY USF/W&T) MUST CONFORM TO LOCAL ELECTRICAL CODES.

WALL-MOUNTED ANALYZER & WALL-MOUNTED RECORDER - INSTALLATION WIRING

50.505.130.020

ISSUE 1 2-98

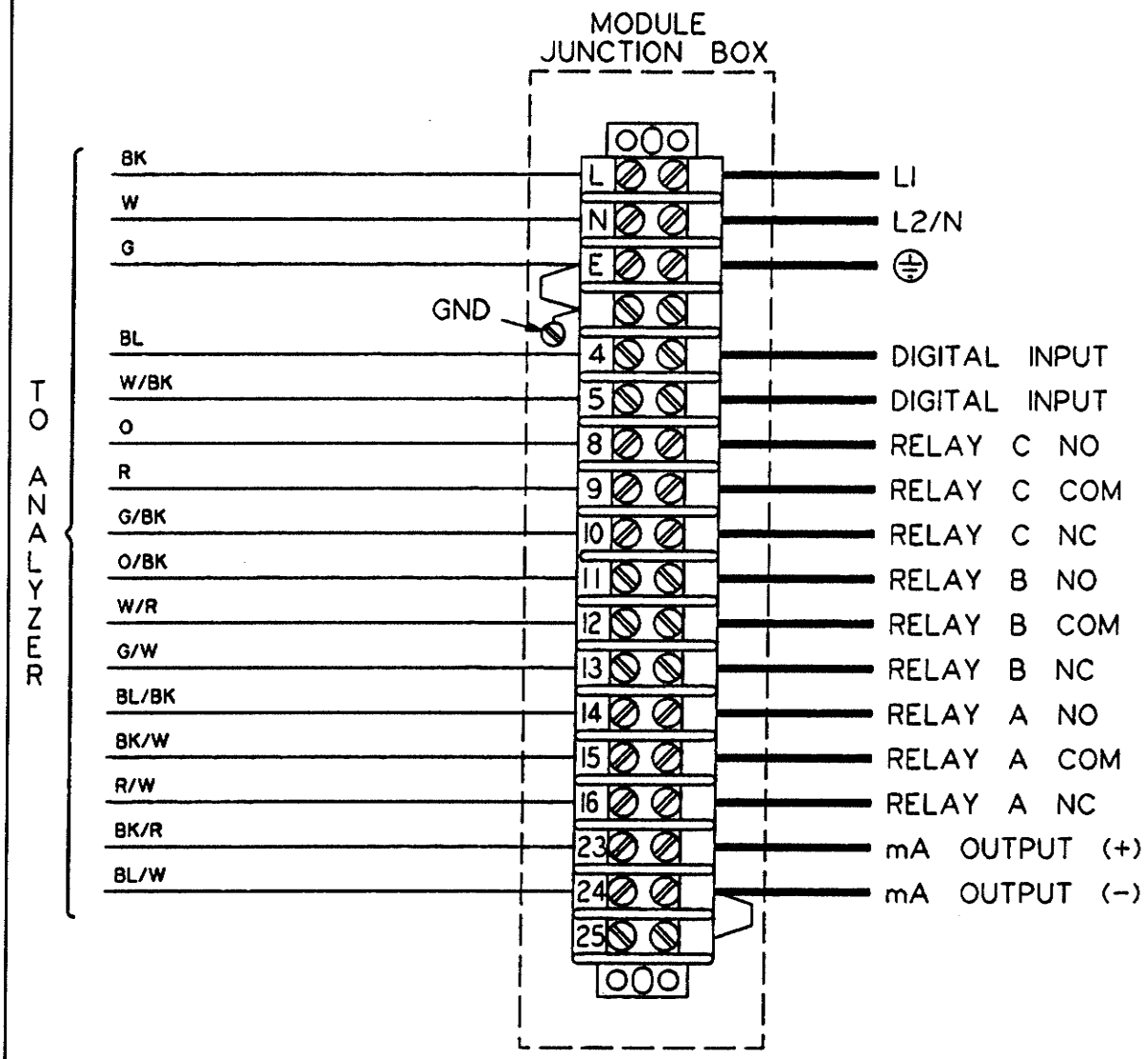

NOTE: —— FIELD WIRING (NOT BY USF/W&T) MUST CONFORM TO LOCAL ELECTRICAL CODES.
—— WIRING BY USF/W&T.

RESIDUAL ANALYZER - INSTALLATION WIRING
Module Mounted

50.505.130.030
ISSUE 1 2-98

CIRCULAR CHART RECORDER WITHOUT CONTROLLER

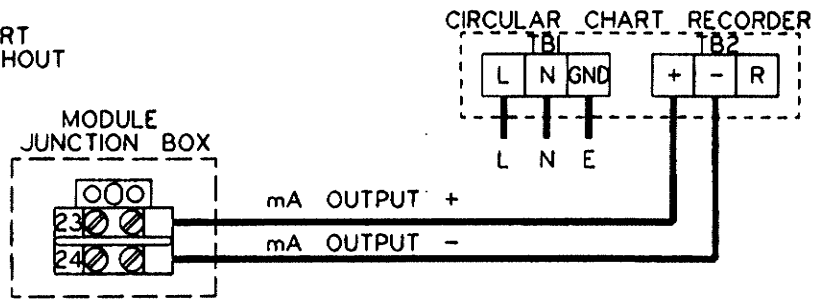

CIRCULAR CHART RECORDER WITH CONTROLLER

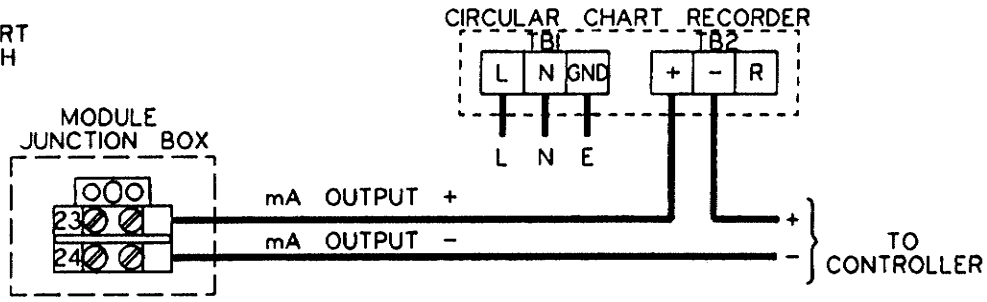

STRIP CHART RECORDER WITHOUT CONTROLLER

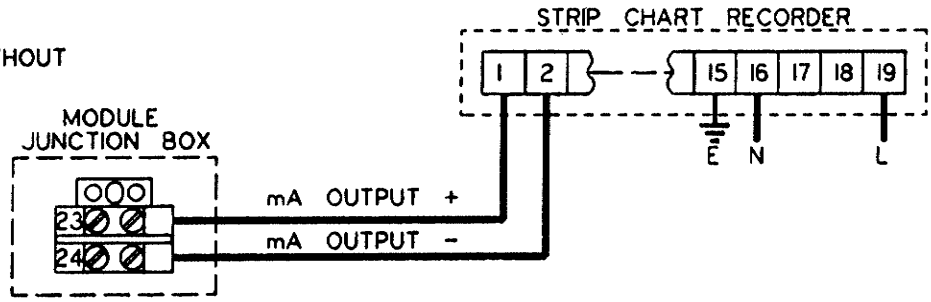

STRIP CHART RECORDER WITH CONTROLLER

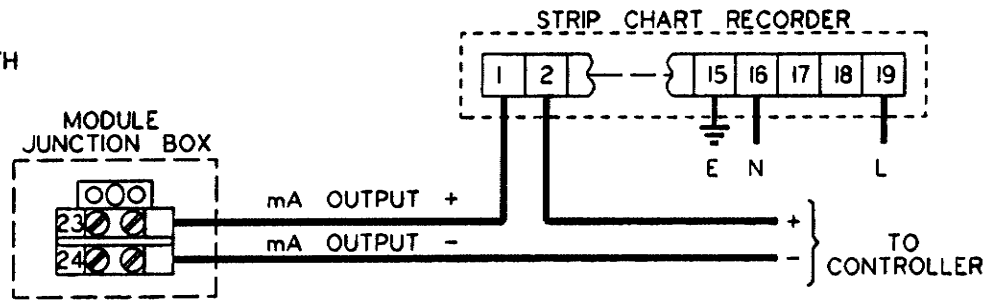

NOTE: —— FIELD WIRING (NOT BY USF/W&T) MUST CONFORM TO LOCAL ELECTRICAL CODES.

ANALYZER IN MODULE WALL-MOUNTED RECORDER
- INSTALLATION WIRING

50.505.130.040
ISSUE 3 2-98

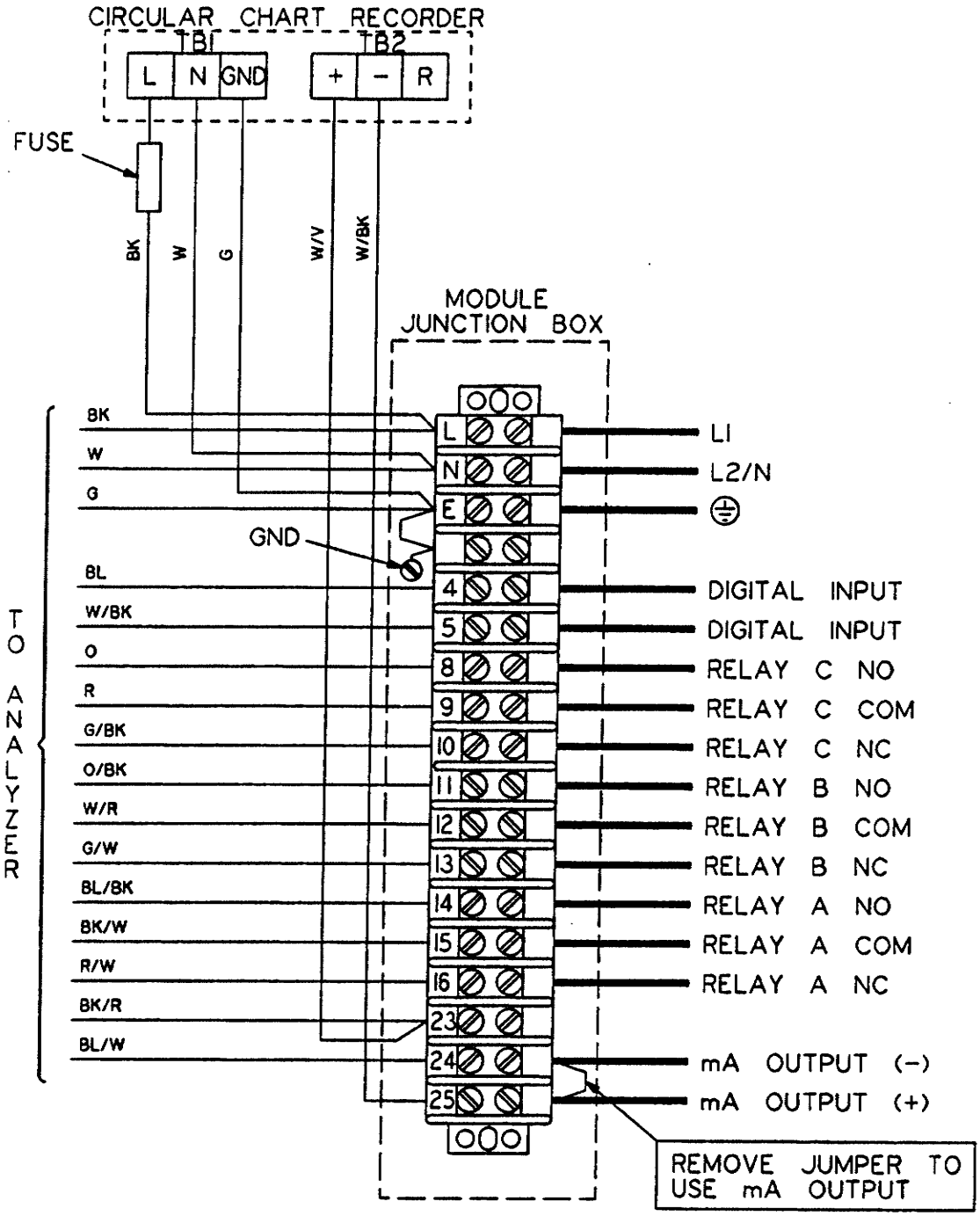

NOTE: ——— FIELD WIRING (NOT BY USF/W&T) MUST CONFORM TO LOCAL ELECTRICAL CODES.
——— WIRING BY USF/W&T.

ANALYZER AND CIRCULAR CHART RECORDER IN MODULE - INSTALLATION WIRING

50.505.130.050
ISSUE 3 2-98

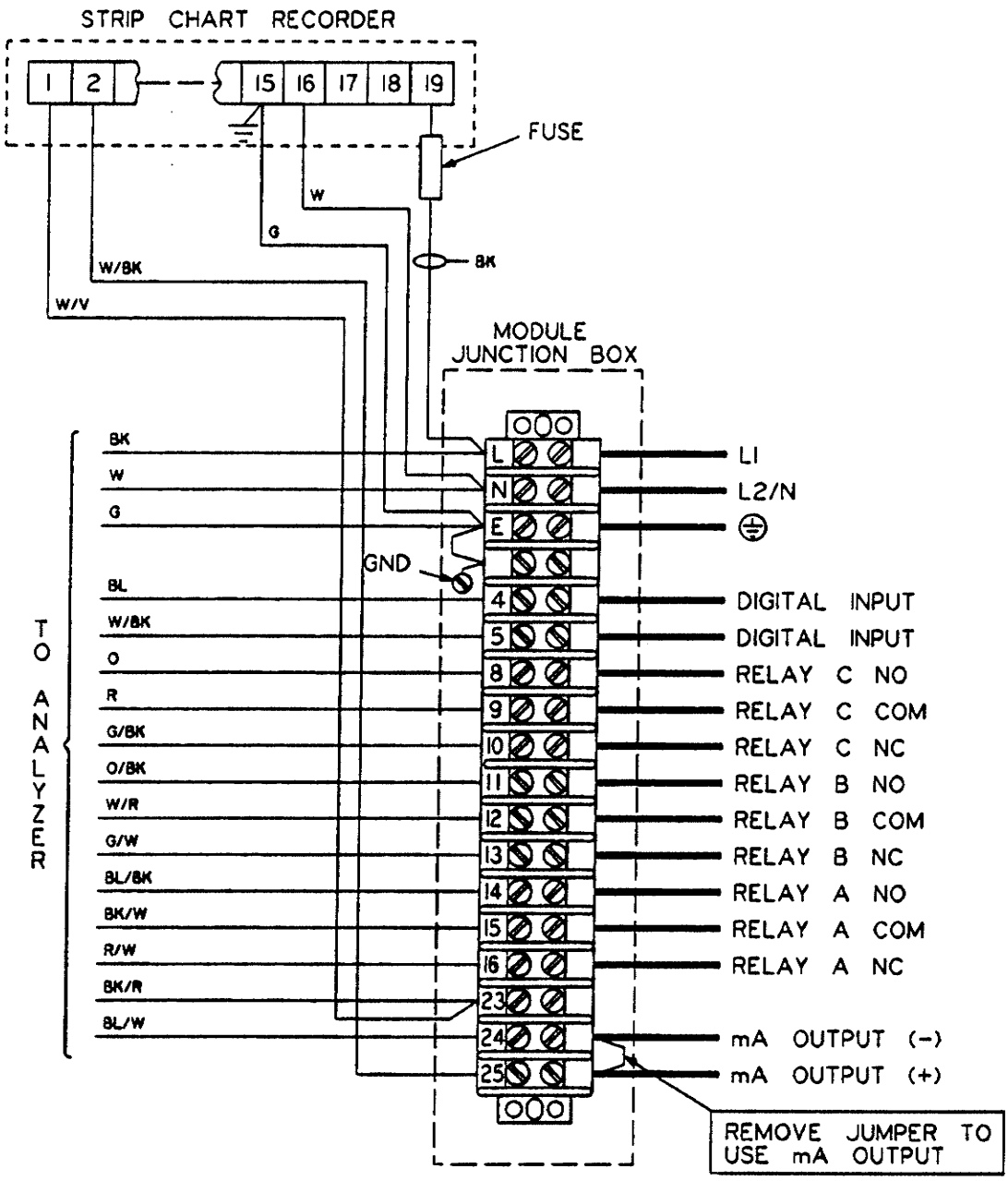

NOTE: —— FIELD WIRING (NOT BY USF/W&T) MUST CONFORM TO LOCAL ELECTRICAL CODES.
—— WIRING BY USF/W&T.

ANALYZER AND STRIP CHART RECORDER IN MODULE - INSTALLATION WIRING

50.505.130.060
ISSUE 3 2-98

SECTION 3 - OPERATION

List Of Contents

PARA./DWG. NO.

Preparation for Operation 3.1
Sample Flow Adjustment 3.1.1
Probe Installation 3.1.2
Reagent Requirements 3.1.3
User Interface - Software Operation (Interface Menu Map) 3.2
Keypad Operation and General Interface Procedures 3.2.1
Main Display - Measured Value 3.2.2
Set-up Group Software Configuration of the Analyzer 3.2.3
I/O (Input/Output) Options Group 3.2.4
Diagnostics Group 3.2.5
Test Functions Group 3.2.6
General Operation 3.3
Start-Up Procedure 3.3.1
Checks and Maintenance 3.3.2
Shut-Down/Re-Start 3.3.3
Theory of Operation 3.4
Additional Calibration Tips 3.5
Illustrations
Operation 50.505.170.010
Flow Diagram 50.505.180.010

3.1 Preparation For Operation

NOTE: Prior to initial operation, ensure that the procedures detailed in Section 2 - Installation have been followed and completed.

3.1.1 Sample Flow Adjustment

Before starting the sample pump or otherwise starting sample flow, check that the bypass control valve on the bypass leg of the Y-strainer, at the analyzer, is open and that the sample flow control valve to the inlet of the analyzer is closed.

CAUTION: To prevent possible equipment damage, apply up to a maximum of 5 psi water pressure to the analyzer sample input. The tubing in the analyzer metering pump cannot withstand more than 5 psi pressure. If pressure in excess of 5 psi is applied to the analyzer input, fluid may be sprayed from the analyzer metering pump inlet.

Once the flow is started, adjust the Y-strainer bypass valve to the desired bypass flow. As discussed in paragraph 2.7, Water Sample and Sample Line Requirements: 0-2 gpm for drinking water applications and 1-5 gpm for wastewater applications.

Adjust the sample flow control valve at the discharge of the Y-strainer to produce a flow through the analyzer of approximately 500 ml/min to the analyzer sample inlet. Most of the 500 ml/min flow through the analyzer bypasses the cell; a small portion is metered into the analyzer cell for measurement.

NOTE: If the application is for clean water and the supply pressure is greater than 20 psi, it may be desirable to replace the ball valve provided for sample flow control with a flow meter with a needle flow control valve for better adjustability.

NOTE: To ensure adequate flushing and minimize fouling, continuous flow (above 1 gpm) through the Y-strainer bypass valve may be required.

3.1.2 Probe Installation

The probe should be installed in the analyzer after the rest of the analyzer installation (mounting, plumbing, wiring) is completed and inspected.

CAUTION: Do not fill the probe with electrolyte until immediately before it is installed in the analyzer. Once the probe is filled with

electrolyte, the electrode end must be kept wetted, as it is when installed in the analyzer. If the probe is filled and the porous element is allowed to dry, the pores will clog with potassium chloride crystals.

Fill the probe (through the fill hole in the side of the probe body) with electrolyte. Fill only to a level just below the fill hole when the probe is upright. The hole plug is not watertight. A small breather hole should be made in the plastic hole plug before replacing in the probe.

Remove the protective cap from the electrode end of the probe. Check that the electrodes are clean; wipe clean with a paper towel if necessary. Do not touch the electrodes (platinum elements) or the porous element (white element), as finger dirt or oil may impede the probe operation. Also, treat the platinum electrodes gently because the platinum material is thin and easily punctured or sheared off. The electrodes are not repairable.

Allow the probe to stand upright (or hang it by its cord) for about ten minutes until electrolyte emerges from the porous element. If the electrolyte does not emerge shortly, it can be forced through the porous element by pressurizing the reservoir with a rubber squeeze bulb—used to force air into the fill hole. Use a sharp blade or a pointed object to cut a small vent hole in filling hole plug just enough to allow air through the plug to equalize pressure to atmospheric pressure on both sides of the plug. Replace the hole plug to prevent evaporation of the electrolyte.

Connect the probe plug into the receptacle labeled "PROBE" inside the analyzer enclosure (wetside) and lay the cable behind the panel unit. Be sure that the probe rests squarely in the flow block. The cable may tend to tilt the probe, but this can be corrected by adjusting the cable.

If, during the preceding start-up of the analyzer, the display indicates "Check Probe Junction" error, it means the electrolyte has not yet emerged on the outside surface of the porous element of the probe. Either allow the analyzer to operate until the alarm stops (electrolyte emerges) or pressurize the electrolyte reservoir with a squeeze bulb to accelerate flow of electrolyte.

3.1.3 Reagent Requirements

NOTE: See paragraph 4.4.1, Preparation of Reagents.

- GENERAL

  The Micro/2000 Residual Analyzer allows the flexibility to select from several analyzer sample conditioning chemicals (reagents). The

choice of conditioning chemical is made to provide the best analyzer performance while considering chemical cost and handling requirements. Some applications require no chemical conditioning of the analyzer sample, while others may require a combination of chemicals. Sample conditioning may be used to provide a stable condition for residual measurement, to eliminate interference from background residuals that are not of interest, and to chemically convert residuals to a form that is conveniently measurable by the analyzer. Also, when required (e.g., with wastewater), detergent may be added to the liquid reagents to prevent the accumulation of grease in the analyzer.

More specifically, the choice of chemicals for analyzer sample conditioning in a given application is based on three parameters:

† the residual to be monitored
† other (potentially interfering) residuals present
† water pH and alkalinity

- RESIDUAL FORM

† Chlorine dioxide and potassium permanganate monitoring

The stability of the sample pH is not as critical when monitoring chlorine dioxide and potassium permanganate residuals as when measuring chlorine residuals. A sample pH change of 0.2 pH units between calibration will cause less than 5% error. Response to chlorine dioxide is somewhat improved at lower pH, however, and for best accuracy (stability) in the monitoring of both residuals, carbon dioxide gas buffering of the analyzer sample is recommended. Carbon Dioxide will also help prevent deposits caused by water hardness within the wetted analyzer components.

† Bromine residual monitoring

Bromine residuals are often encountered in chlorinated water with a significant bromide residual (e.g., in saline waters). Bromine residual behaves very similarly to chlorine residual and so the application recommendations for each are the same.

† Chlorine residual monitoring

For the purpose of this description, chlorine species can be grouped as follows:

Free chlorine	-	hypochlorous acid and hypochlorite ion
Chloramines	-	monochloramine and dichloramine
Organic chlorine	-	a broad group of compounds with relatively weak disinfecting and oxidizing potential, a byproduct of chlorination
Total chlorine	-	the sum of the above residuals

‡ Free Chlorine monitoring

In applications where the pH is less than pH8 and is stable, free chlorine residual can be monitored with no chemical conditioning. Often the stability of the water sample pH is not certain and a buffer is used to regulate the analyzer sample pH to between pH6 and pH4. If it is important that the analyzer function accurately under conditions where the pH of the water sampled may vary, buffering is recommended.

‡ Total Chlorine monitoring

Potassium iodide liquid reagent must be added to the analyzer sample for the measurement of total chlorine residual. The sample pH should be maintained between 4.0 and 4.7. The iodide solution is made by adding 120 grams of potassium iodide to one gallon of unchlorinated DI water.

- INTERFERING RESIDUALS

Interfering residuals can cause either positive interference (strong oxidants) or negative interference (e.g., organics that combine with chlorine to form organic chlorine forms, some of which can behave as free chlorine or may not be detected at all by the standard method of measurement or by the analyzer). Decreasing the analyzer sample pH (e.g., from pH4 to pH2.5) may, in some applications, cause interference from oxidants but, where acceptable, may also be desirable to improve the response to sluggish organic chlorine compounds.

In the measurement of potassium permanganate or chlorine dioxide residuals, ammonium sulfate reagent liquid is used to eliminate the response (interference) to free chlorine when necessary.

- BUFFER SELECTION

WARNING: PH4 BUFFER WILL SEVERELY IRRITATE EYES AND CAUSE CHEMICAL BURNS TO SKIN. ALWAYS WEAR APPROPRIATE PROTECTIVE EQUIPMENT DURING HANDLING. WHEN DILUTING ACID, ALWAYS POUR THE ACID INTO THE WATER, NEVER POUR WATER INTO ACID. USE CAUTION WHEN DISCONNECTING THE REAGENT TUBING AND AVOID CONTACT WITH ANY FLUID THAT DRIPS FROM THE OPEN END. IT IS THE RESPONSIBILITY OF THE USER OF THE EQUIPMENT TO OBTAIN AND FOLLOW THE SAFETY PRECAUTIONS OF THE MANUFACTURER OF THE HAZARDOUS MATERIAL.

† CARBON DIOXIDE gas may be used as a buffer for chlorine, potassium permanganate, and chlorine dioxide monitoring. The buffered sample pH should be between pH6 and pH5.

† pH4 BUFFER liquid reagent may be used for sample buffering in chlorine, potassium permanganate, and chlorine dioxide monitoring. It is the preferred buffer for use in waters of low alkalinity for measuring total chlorine with a substantial percentage as dichloramine or organic chlorine. USF/W&T supplies pH4 buffer for this purpose. The buffered sample pH should be between pH4.7 and ph4.

3.2 User Interface - Software Operation

The analyzer is software controlled. Software control allows more flexibility to be incorporated into the hardware and sometimes enables improvements to the operation of already installed units by software upgrades. For example: The analyzer is able to check for failure of the cell temperature sensor. In the event of such a failure, the analyzer warns the user by an alarm and system fault message and changes to the non-temperature compensated mode of operation.

The software and set-up and calibration information are stored in non-volatile memory, meaning the information will not be lost in the event of a power loss.

In normal operation, the measured residual is displayed. The value is displayed in the upper portion of the display; the units of measure and the identifier are displayed in the lower portion. The lower portion of the display allows two lines of text to be used for various parameter "prompts" and alarm messages. Normally, the measured residual is the only parameter

that is important to the user; however, there is more information the analyzer needs for operation and that it is capable of providing to the user. These other functions and parameters are organized into Display Groups. Some parameters are display only (for information only), and some require information input to configure the analyzer to the customer's requirements.

Other than the Main Display, the typical user will have an interest only in the Setup Group (at initial start up). There the main functions of interest are the Identifier, the Measuring Range, and the High and Low Alarm Levels.

Table 3.1 - Interface Menu Map

DISPLAY GROUP	FUNCTIONS/PARAMETERS (contained in)
MAIN	Measured Value
SETUP	Measuring Units Measuring Range Cell Voltage Set Point High Alarm Menu Low Alarm Menu Failure Alarm Warning Alarm Sample Line Dosing Control Menu Interface Lock Status
I/O OPTIONS	Digital Input Relay "A" Menu Relay "B" Menu Relay "C" Menu Alarm Deadband
DIAGNOSTICS	Measured Value Slope mA Output Cell Signal Cell Voltage Cell Temperature Software Version Unit Serial Number System Restart System Shutdown Local Operating Mode
TEST	mA Output Test/Calibration Menu Relay/Alarm Test Menu Dosing Control Test Time to Next Dosing

The only parameter needed for regular operation is the MAIN display parameter. The other functions and parameters are required only for configuration (at the start of operation) and for Troubleshooting.

3.2.1 Keypad Operation and General Interface Procedures (See Dwg. 50.505.170.010)

User interaction with the analyzer is made using the keypad to view or select (implement) functions aided by prompts on the alphanumeric display.

The keypad is located on the front of the analyzer, below the display window. It consists of six keys, listed and briefly described as follows:

KEY NAME	IDENTIFIER	PURPOSE
ALARM ACKNOWLEDGE	*	Acknowledges alarm.
ESCAPE	●	Escape a sub-menu, escape from a function, abort a parameter value change sequence, or return to MAIN display.
UP	▲	View previous function/parameter or increase a selected parameter value.
DOWN	▼	View next function/parameter or decrease a selected parameter value.
FUNCTION	F	DISPLAY GROUP selector.
ENTER	E	Enter a sub-menu, initiate a function, initiate a change to a parameter value, or update/ record a new parameter value.

To change the parameter value, use the FUNCTION key to move to the correct Display Group and the UP and DOWN keys to move within the Display Group to the intended display. At a parameter display (within a Display Group), the value of the parameter will usually be displayed on the lower line. If the lower line reads "menu" (e.g., as is the case with "high alarm"), this is an indication that a sub-menu exists for this parameter. To enter the sub-menu, simply press ENTER. The UP and DOWN keys can then be used to move within the sub-menu.

At the intended parameter, press ENTER to initiate the change sequence. The top line, which is the parameter name, begins to flash. This flashing

display, prompts the user to use the UP and DOWN keys to scroll to a new value. When the desired value is reached, press ENTER to update/record the setting, or press ESCAPE to abort the change. If the user is in a sub-menu, press ENTER at the "exit" display or use the ESCAPE, to close the menu.

3.2.2 Main Display - Measured Value

The Main display shows the measured value (residual) and the measuring units and identifier. The Main display is the primary or nominal parameter of the analyzer. If the interface is left at another display for more than five minutes without any keyboard activity, the interface will return to the Main display automatically. The Main display is also used to calibrate the analyzer. Refer to the calibration procedure instruction for further detail.

3.2.3 Set-up Group - Software Configuration of the Analyzer (See Table 3.1)

While configuration parameters are set to default settings on initial power-up, the settings should be verified to correspond to installation wiring and user preferences or application requirements. Parameters contained in the SET-UP display group are for this purpose. The parameters and their settings may be viewed without altering them; the default settings are also provided in the following instructions.

3.2.3.1 Measuring Unit/Identifier

The identifier is a convenience—it modifies the units "mg/L" displayed on the text line beneath the main display. Available modifiers are:

"ClO_2"	-	chlorine dioxide
"Cl_2 TOT"	-	total chlorine
"Cl_2 FR"	-	free chlorine
"$KMnO_4$"	-	potassium permanganate
"Ozone"	-	ozone

The factory default is "Cl_2 TOT".

3.2.3.2 Measuring Range

The Measuring Range is the range of measured residual over which the analyzer will be expected to function, also the range to which the 4 to 20 mA output corresponds. It is elsewhere referred to as the "range of the analyzer." If the range is changed from the factory default, or from any prior setting, the hardware gain switches should also be changed accordingly. The default range is 2.0 mg/L. Refer to the Section 4 - Service for instructions on changing gain.

3.2.3.3 Cell Voltage Set Point

The cell voltage is set at the factory to 0.25v and generally needs no adjustment by the user. If the cell voltage is not correct (if it deviates from the set point), the software will report a system fault.

The cell voltage is a potential maintained on the electro-chemical cell that controls the response to various oxidants (chemicals) in the sample. The cell is able to selectively measure the desired chemical because of the selected potential. This potential is hardware controlled (by a dedicated circuit), but is monitored by the software.

WARNING: TO AVOID ELECTRICAL SHOCK OR DAMAGE TO EQUIPMENT, AVOID CONTACT WITH CIRCUIT BOARD COMPONENTS WHILE MAKING ADJUSTMENTS.

TO AVOID POSSIBLE SEVERE PERSONAL INJURY FROM ELECTRICAL SHOCK, WHEN SERVICE MAY BE REQUIRED TO BE PERFORMED TO THE UNIT WITH POWER CONNECTED, IT SHOULD BE PERFORMED ONLY BY PERSONNEL QUALIFIED TO PERFORM SUCH SERVICE.

Adjusting the cell voltage requires access to the electronics and adjustment of a potentiometer on the input board (a component of the CPU board). Refer to paragraph 4.4.14.2 for instructions on cell voltage adjustment.

To reset the cell voltage setpoint (software setpoint):

a. Initiate the change by pressing ENTER. The top line will flash. The bottom line indicates the current measured cell voltage.

b. To change the current setting, adjust the potentiometer.

c. Press ENTER again. The setpoint is now set at the new value.

The factory default is set at 0.25v.

3.2.3.4 High and Low Alarm

The analyzer can be configured to alarm (to actuate relay outputs) in the event that the measured value varies from a user-selected range. These functions allow the user to set the alarm levels (the extremes of the accepted range), configure the alarm as latching or non-latching, and enable or disable the alarm. If the alarm is disabled, the alarm levels set are

retained. The analyzer is delivered with alarms enabled and the alarm levels set to the extremes of the default operating range.

Factory Defaults:
High Alarm Level = 2.00 mg/l
High Alarm Action = LATCHING
High Alarm State = ENABLED

Low Alarm Level = 0.00 mg/l
Low Alarm Action = LATCHING
Low Alarm State = ENABLED

3.2.3.5 System Fault Alarm

System faults are errors in the operation of the equipment detected by the self-diagnostic functions. These faults can be classified as either WARNING conditions, during which the analyzer can continue to operate, or FAILURE conditions, during which the analyzer cannot continue to operate. The mA output is turned off during FAILURE conditions. Unlike HIGH and LOW alarms, system fault alarms cannot be disabled from appearing on the display. They can only be configured as LATCHING (user acknowledgement required to clear) or NON-LATCHING (self canceling when condition is corrected).

Factory Defaults:
System Failures = LATCHING
System Warnings = NON-LATCHING

3.2.3.6 Sample Line Dosing Control

The analyzer's Sample Line Dosing Control function provides a relay output for the control of periodic addition of a cleaning agent to the sample flow to inhibit biological growth in the sample line. Sample line dosing is necessary in process water exhibiting a high biological growth potential, and is also necessary when a weak or no chlorine residual (i.e., sulfur dioxide residual) is measured in the sample.

- FUNCTIONAL DESCRIPTION

  The procedure is as follows:

  At some user-selected frequency (dosings per week), the dosing relay is actuated (energized). This closes the dosing relay output contacts (wired to a dosing apparatus pump) and causes a dosing agent to be fed into the sample-line for a selected time period (dosing time). While the dosing agent is being fed into the sample flow, the analyzer will stop the sample metering pump to block the sample flow to the measuring

cell (no flow time). The sample flow is blocked during this period because the dosing chemical might disrupt the cell or produce false alarms and a false control or recorded mA signal. Generally, the dosing chemical is chlorine in a concentration of one or more orders of magnitude greater than the process concentration. During the no flow time, the dosed sample is bypassed through the analyzer internal bypass line.

Where there is a substantial hydraulic delay between the dosing feed point and the analyzer, the user may want to delay the "no flow time". The reason for this delay is to allow the analyzer to continue to operate during most of the time period from when the dosing agent is fed until it reaches the analyzer. Generally, it is sufficient to configure the analyzer to shut off cell flow immediately. The factory default "delay time" is zero.

The analyzer "no flow time" cannot be set less than the "dosing time" plus one minute. If necessary, the "no flow time" is increased automatically, by the analyzer software, to meet this requirement.

After the flow is resumed to the cell, there is a five minute stabilization delay, during which the analyzer is allowed to stabilize before resuming the mA output; however, the display resumes operation without delay.

EXAMPLE (DELAY TIME SETTING)

For a system that has a one-minute hydraulic delay time between the dosing point and the analyzer, and the user chooses to dose 14 times per week for five minutes duration at each dosing: Dosings per week = 14, and dosing time = 5.0.

With Delay Time - set the "delay time" .5 minute (shuts off cell flow before the dosing agent reaches the analyzer) and set the "no flow time" to 6.5 minutes ("dosing time" plus one minute, plus the remaining one-half minute from the hydraulic delay).

Without Delay Time - set the "delay time" to zero and set the "no flow time" to 7 minutes ("dosing time" plus one minute, plus the hydraulic delay).

As demonstrated in the above example, a moderate dosing period necessitates a substantial time period when the analyzer is off-line. Also, in most systems, the reduction in "no flow time" provided by the "delay time" is not great.

- SETTING DOSING CONTROL PARAMETERS

A number of parameters must be entered into the analyzer for sample line dosing. In addition, the dosing function may be enabled or disabled. The parameters are:

dosings per week
dosing time
delay time
no flow time

These are set through the sample line dosing control sub-menu. Once set, the dosing sequence can be tested in the Test display group. This test runs through the dosing sequence to observe that the installation and set-up and component functions are correct.

3.2.3.7 Setting the Interface Lock

The user may configure the system for locked or unlocked mode. In locked mode, the use of any function that requires input is locked and requires the input of a three-digit access code before further input will be accepted. The system is then unlocked until the ESCAPE key or ENTER key is pressed or until it "times-out" (after five minutes) back to locked mode in the MAIN display.

There are two security level codes. The Level 1 code (CALIBRATION CODE) allows clearance for system calibration only. The Level 2 code (MASTER CODE) allows access for all parameter changes, functions, and calibration. The purpose of these functions is to prevent accidental or unauthorized personnel from tampering with the analyzer. The locking option is a two-step function requiring the selection of an access code and enabling the function.

To set the access code, set the calibration code, and lock or unlock the analyzer, do the following:

a. Press ENTER at the "lock setup" display. The user will be prompted to accept the present master code or enter a new master code.

b. A new code is entered one digit at a time from left to right. To choose the code numbers, press the UP or DOWN keys until the correct number appears. Press ENTER to record each digit and advance to the next.

c. Press ENTER to record the new master code or accept the current code.

d. The user will be prompted to accept the present calibration code or enter a new calibration code. To change the calibration code, follow the procedure in step b. To accept the current code, press ENTER.

e. The user will be prompted to lock or unlock the system. Use the UP or DOWN keys to choose the "lock" or "unlocked" code. Press ENTER to accept the lock setting.

The factory default settings are: MASTER CODE = 000
CALIBRATION CODE = 000
UNLOCKED

3.2.4 I/O (Input/Output) Options Group (See Table 3.1)

The I/O Options display group contains displays for setting up the digital input and relay parameters.

3.2.4.1 Digital Input

The voltage used to energize the digital input is user-selectable through a jumper (JP1) on the power supply board. The user can configure the digital input for 24Vac/dc, 115Vac/dc, or 230Vac/dc. The digital input must be valid for one-half second before action is taken. This filters any spikes occurring at the digital input caused by induced noise.

The digital input can be configured to act as either a remote "system shutdown" or a remote "alarm acknowledge". The default is "system shutdown".

As remote "alarm acknowledge" momentarily energizes the digital input, it will have the same effect as pressing the alarm acknowledge key.

As remote "system shutdown" energizes the digital input, it causes the system to go into "sleep mode". The unit acts as if the system had been shutdown through the keypad in the DIAGNOSTIC display group. Pressing any key on the keypad will restart the system. With the digital input in this configuration, the system is looking for a transition at the digital input. That is, to shutdown the system, an unenergized-to-energized transition must occur. To restart the system, an energized-to-unenergized transition must occur. To restart the system remotely, after the system has been shutdown locally using the keypad, energize the digital input for at least one-half second, then de-energize it.

3.2.4.2 Relay Setup (Relays A, B and C)

- Relay Function: This parameter associates each relay with a function.

The available functions are:

high alarm	high/warn
low alarm	lo/warn
high/low alarm	hi/lo/warn
system fail	fail/warn
high/fail	hi/fail/warn
low/fail	lo/fail/warn
hi/lo fail	all alarms
system warn	line dosing

The factory defaults are:
Relay A = hi/fail/warn
Relay B = lo/fail/warn
Relay C = LINE DOSING

- Relay State: This parameter determines if the relay is normally energized or de-energized. For safety, if the relay function is set for line dosing, the relay state is normally de-energized and cannot be modified by the user.

The factory defaults are:
Relay A = NORMALLY ENERGIZED
Relay B = NORMALLY ENERGIZED
Relay C = NORMALLY DE-ENERGIZED

3.2.4.3 Alarm Deadband

This parameter determines the amount of hysteresis that exists around a high or low alarm level. The purpose of this parameter is to avoid relay "chattering" (chattering would occur only if non-latching alarm operation is selected) or immediate re-triggering when the measured value varies in and out of an alarm condition. By introducing hysteresis, the alarm condition is required to clear well beyond the trigger level before re-triggering can occur. The deadband is set in percent of full scale and can be set from 0 to 20%.

Example: Range = 0 mg/l - 1.0mg/l
High Alarm = 0.5mg/l
Deadband = 10%

The alarm is triggered if the measured residual exceeds 0.5mg/l.

If LATCHED: After ALARM ACKNOWLEDGE is pressed, the measured residual must drop below 0.4mg/l [0.5 - (10% * 1.0)] before it can re-trigger the alarm by exceeding the high alarm level.

If UNLATCHED: The measured residual must drop below 0.4mg/l before the alarm will clear itself.

The factory default is 5%.

3.2.5 Diagnostics Group

The Diagnostic display group contains a set of "display only" functions, used to aid in troubleshooting performance problems. See paragraph 3.2, User Interface - Software Operation, for the Interface Menu Map.

3.2.5.1 Measured Value

Measured Value is the same as the measured value in the Main display. It is repeated in this group for reference when monitoring diagnostics. In the Diagnostics Group, however, the measured value is not limited to the user-selected analyzer range.

3.2.5.2 Slope

Slope indicates the constant of proportionality between the measured value and the cell signal (corrected to 77°F (25°C) cell sample temperature), as determined at the time of calibration.

3.2.5.3 mA Output

The displayed mA Output value can be used to verify that the output signal is appropriate for the indicated measured value and the value indicated by the receiving device (for the range selected for the analyzer). The indicated value cannot be changed at this display function, but can be toggled to indicate in units of milliamps or percent of full scale by pressing the ENTER key.

The predicted value can be calculated as:

(16 * Measured Value / Range) + 4

3.2.5.4 Cell Signal

The Cell Signal is the value of the signal produced by the (amperometric) cell expressed in microamps. It can be used to verify that the signal is present and that it is approximately the expected value for the measured value.

3.2.5.5 Cell Voltage

Normally, the current value of the cell voltage should not change during the operation of the analyzer and should be the same as the cell voltage setpoint (a Set-Up function).

3.2.5.6 Cell Temperature

The temperature of the water sample in the cell. The indicated value cannot be calibrated, but it can be toggled to indicate in units of degrees Centigrade or Fahrenheit by pressing the ENTER key.

3.2.5.7 Software Version

The software version is the EPROM part number and issue. This information may be needed for service support.

3.2.5.8 Serial Number

The serial number of the complete analyzer arrangement is displayed by this function. The serial number consists of two letters followed by five digits. The serial number is also printed on the specification label in the electronics enclosure or on the back of the module.

3.2.5.9 System Restart

This function allows for a "warm" startup of the system. It simulates a system power-up by resetting the CPU. All parameter values stored in the non-volatile RAM are transferred to the working RAM. Press ENTER to activate this function.

This function allows the user to restore operation to a unit when it has become corrupted by electrical noise. Calibration and other important parameters are not lost.

If a warm restart does not restore proper operation, the system may be forced to re-initialize. At this point, all factory default information is restored, and the user's calibration and set-up parameters are lost.

To re-initialize, the system must first be unlocked (if it is locked). Then, initiate a warm restart and immediately press and hold the ESCAPE key. The system will respond by indicating that it is re-initializing. User set-up and calibration parameters must then be re-entered.

3.2.5.10 System Shutdown

This function puts the system in "sleep mode". The mA output is set to zero, all relays are de-energized, and the pumps are turned off. Pressing any key takes it out of "sleep mode". This function can also be done remotely, using the digital input (See paragraph 3.2.4, I/O Options).

3.2.5.11 Local Operating Mode

This parameter is used to put the system in "SERVICE" mode. In this mode, the mA output is frozen, the system will no longer monitor for alarm conditions, and the five-minute "time-out" back to the MAIN display is disabled. The system will automatically switch back to the "NORMAL" operating mode upon leaving the DIAGNOSTIC display group.

3.2.5.12 Self-Diagnostic, System Fault Messages

The self-diagnostic, system fault messages are listed here for reference. Refer to paragraph 4.3, Troubleshooting, for explanations of the messages. The difference between a System Warning and a System Failure is that the analyzer is usually able to continue to operate under a warning condition.

SYSTEM WARNINGS	SYSTEM FAILURES
CELL VOLTAGE DEVIATION	CELL VOLTAGE OUT OF RANGE
LOSS OF TEMPERATURE COMPENSATION	CHECK PROBE CONNECTION
HIGH ALARM	CHECK PROBE JUNCTION
LOW ALARM	CELL INPUT SATURATED
HIGH mA LOOP IMPEDANCE	
SLOPE ERROR	

3.2.6 Test Functions Group

See paragraph 3.2, User Interface - Software Operation, for the Interface Menu Map.

3.2.6.1 mA Output Test and Calibration

The analyzer provides an isolated, 4 to 20 mA output, proportional to the measured residual. It can be tested and calibrated using this function. (Also refer to paragraph 2.9.4, mA Output).

To test and calibrate the mA output:

a. Enter the "mA OUTPUT" sub-menu.

b. Press ENTER at the "0% output" display. The unit will output what it determines to be 4mA.

c. The user is prompted to adjust the output, using the UP and DOWN keys.

d. Press ENTER to record the new calibration point and return to normal operation, or press ESCAPE to return to normal operation.

Follow the same procedure for the "100% output" display. The "50% output" can only be used to test for linearity; it cannot be adjusted.

3.2.6.2 Relay and Alarm Tests

These functions can be used to test the operation of the individual relays and to test the configuration of individual alarms.

- To test the relays:

  a. Enter the "relay tests" sub-menu. At the "Relay A" display, the normal state of the relay is displayed on the lower line.

  b. Press ENTER to put the relay in its non-normal state (energized/ de- energized).

  c. Press ENTER or ESCAPE to terminate the test.

  Follow the same procedure to test "Relay B" and "Relay C".

- To test the alarms:

  a. Enter the "relay tests" sub-menu. At the "high alarm" display, the lower line will show the relay(s) currently configured for high alarm.

  b. Press ENTER to put this relay in its alarm state. This is reflected on the display.

  c. Press ENTER or ESCAPE to terminate the test. Follow the same procedure to test the "low alarm" and "system alarm".

3.2.6.3 Dosing Control Test

This function allows the user to activate the dosing control function manually. Unlike an automatically activated dosing sequence, this dosing sequence can be terminated at any time by pressing ESCAPE.

- To test the dosing control function:

  a. At the "dosing test" display, the lower line shows the relay(s) currently configured for line dosing.

  b. Press ENTER to start the test. The upper line shows the configured relay(s), the letter "W" (which represents the pump ("wetside") control relay D), and the state of the pumps.

     The lower line indicates the state of each of these relays ("e" for energized, "d" for de-energized). The short line above the lower lines indicates the time, in seconds, until the next action occurs.

  c. At the end of this test, whether terminated normally or prematurely by the user, the time until the next line dosing is reset. The next dosing occurs as it would if an automatic dosing had just taken place.

3.2.6.4 Next Dosing

This display shows the time before the next line dosing sequence will occur.

3.3 General Operation

Before attempting to use the analyzer, verify that all preliminary mechanical and electrical requirements have been satisfied according to Sections 2 and 3 of this instruction book.

3.3.1 Start-Up Procedure

a. Close the valve to the inlet of the analyzer and open the Y-strainer bypass valve before starting the sample flow through the Y-strainer.

b. Adjust the Y-strainer bypass flow control valve for desired bypass flow and inspect the sample line for leaks.

c. Slowly open the valve at the inlet to the analyzer, while checking for leaks within the analyzer. Adjust for a sample flow of approximately 500 mL/min into the analyzer.

It may take approximately five minutes for the reagents to prime and for the reagent and sample flow to stabilize. During this time, warnings and alarms may act intermittently. Allow the analyzer to operate at least 30 minutes before attempting initial calibration or expecting stable operation.

Observe the analyzer operation upon start-up to be sure all components are functioning properly.

When operation is stable, add a small amount of cleaning grit to the cell and calibrate the analyzer. A "rough" calibration of the analyzer is made upon start-up of the analyzer, but calibration should be rechecked after 24 hours of operation.

If difficulties occur during startup, refer to paragraph 4.3, Troubleshooting, for instructions.

3.3.2 Checks and Maintenance

The following checks should be performed regularly. Reagent usage (duration between reservoir refills) will determine the frequency of reagent maintenance checks.

3.3.2.1 Reagent Reservoirs

Check reagent reservoir levels regularly. Note the change in level at weekly intervals. If the reagent usage is less than or greater than normally observed, or if there is backflow into the reagent reservoirs, check the metering pump and reagent tubing units in the pump.

3.3.2.2 Calibration

Before beginning calibration, be sure the interface is at the Main display function, Measured Value.

a. Take a sample of the process water from the analyzer bypass flow within the analyzer wetside. A sample of 500 ml is taken to allow one minute of hydraulic mixing in the sample container. Immediately after the sample is taken, initiate the calibration procedure.

b. To initiate the calibration procedure, the interface should be at the Main display function. Press ENTER at the Main display to initiate calibration and enter the access code, if required. The display reads "CALIBRATE". When the function is initiated, the display is frozen indicating the last measured value, but the mA output continues to operate.

c. Measure the residual contained in the process sample. Enter this value (correct the value on the display) using the UP and DOWN keys. Press ENTER to set the value.

3.3.2.3 Grit in Cell

Check that there is "sufficient" grit in the cell, meaning there is enough grit so that it is easily visible scouring around the cell, but not enough so that it piles up on the bottom of the cell.

To add grit, remove the probe from the cell. Add the grit and replace the probe. Do not allow anything to touch the electrodes. They are easily damaged, and any contact (especially cleaning) may affect calibration.

The cell should contain two to four grams of grit. Add approximately one gram at a time. When adding grit initially, it may pile on the bottom or float to the top of the cell. This is normal. Allow the grit to "break in". If it continues to be a problem, rinse the grit in alcohol.

3.3.2.4 Leaks and Corrosion

Check for signs of leaks (i.e., wetness or corrosion) around the sample line and inside the analyzer wetside. Repair all leaks.

3.3.2.5 Impeller Drive and Grit

The impeller functions properly when it rotates steadily and quietly.

Occasionally, when there is a lot of grit in the cell, the impeller may be heard striking the grit. An occasional occurrence of this is normal. If this occurs frequently, the cell must be removed and the grit rinsed from the cell. Add a smaller quantity of grit. Restart the analyzer.

3.3.2.6 Probe Electrolyte Level

Check the probe electrolyte level approximately once a month. Fill the probe with electrolyte through the fill hole in the side of the probe body.

Fill only to a level just below the fill hole when the probe is upright. The hole plug is not watertight. After filling the probe with electrolyte, replace the plug, then replace the probe in the cell.

3.3.2.7 Analyzer Metering Pump

Check that the metering pump is turning quietly. Tubing should be in place properly and not show excessive wear or leakage.

Check that there is flow from the discharge line of the analyzer cell. It will not be steady, but should be consistent. Typical flow is seven drops in rapid succession followed by a pause in flow (8 mL/min for 1 rpm pump, 16 mL/min for 2 rpm pump).

Note the reagent usage (i.e., the change in reservoir level). Refer to the paragraph 4.3.4, Troubleshooting - Metering Pump, or paragraph 4.4.6, Special Service Instructions - Pump Tubing Units Replacement.

3.3.2.8 Sample-Flow, Y-Strainer, and Sample-Pump

Check that there is sample flow from the bypass line in the analyzer. It should be a substantial flow, 500 ml/min nominal. The pressure into the analyzer must not be greater than 5 psi.

Open the Y-strainer bypass flow to flush the sample line and strainer element (for about one minute). Readjust the valve for the desired bypass flow through the Y-strainer, then open the analyzer sample inlet valve.

If flow from the Y-strainer discharge leg is marginal with the bypass valve fully open, check for a clogged sample line, low supply pressure, or a failing sample pump.

If flow into the analyzer is marginal with the inlet valve open, check the strainer element in the Y-strainer for clogging.

3.3.3 Shut-Down/Re-Start

The system may be shut down for short periods of time (up to one week) by turning off the power switch with the sample flow either on or off, closing the valve at the inlet to the analyzer, then turning off the sample pump.

For periods of greater than one week duration: Unplug the probe and remove it from the analyzer. For long periods of disuse, wipe the probe clean with a paper towel and place the caplug (as shipped with the probe unit)

on the probe tip. The caplug should contain a small amount of water or electrolyte solution. Store the probe in a vertical position (tip down).

When the power is disconnected, intentionally or by a power failure, the configuration and calibration settings of the analyzer are maintained. When the system is restarted it resumes operation in the same state as when the power was turned off.

Restarting the system is the same as the system start-up procedure.

3.4 Theory of Operation

The measurement of free chlorine is made directly at a buffered pH of 4 with pH 4 buffer or pH of 5 or 6 with carbon dioxide. The measurement of total chlorine is made by reacting the various chlorine species with potassium iodide at the buffered pH, then measuring the resulting iodine concentration.

The net reaction of chlorine with iodide is:

$Cl_2 + H_2O \rightarrow 2H+ + OCl- + Cl-$ (hydrolysis of chlorine)

$OCl- + 2I- + 2H+ \rightarrow H_2O + 2Cl- + I_2$

The analyzer measuring process is as follows:

A continuous sample is delivered to the analyzer. A flushing Y-strainer divides the sample into two streams—the larger bypass stream continuously flushes the Y-strainer and the smaller stream, about 500 ml/min, flows into the analyzer. Most of the flow into the analyzer is again bypassed, but a small portion is metered from this flow by a peristaltic metering pump. The reagents, pH 4 buffer or carbon dioxide for the measurement of free chlorine residual and potassium iodide solution with detergent for the measurement of total chlorine residual, are also metered by the same pump. The reagents are then mixed with the sample as the sample is pumped to the analyzer cell. A three-electrode amperometric "probe" is immersed in the sample in the cell. A rotating impeller stirs the sample and maintains a constant sample velocity across the electrode surfaces. It also agitates the grit used to clean deposits from the electrodes, improving the stability of calibration. The amperometric cell produces a signal (electrical current) proportional to the oxidant (e.g., chlorine) concentration in the cell.

3.5 Additional Calibration Tips

Because the analyzer is on-line, the process should be observed for a few moments before and while taking the sample to insure that the process does not deviate suddenly during sample taking and before initiating the calibration. A substantial change in the process during calibration results in an inaccurate calibration.

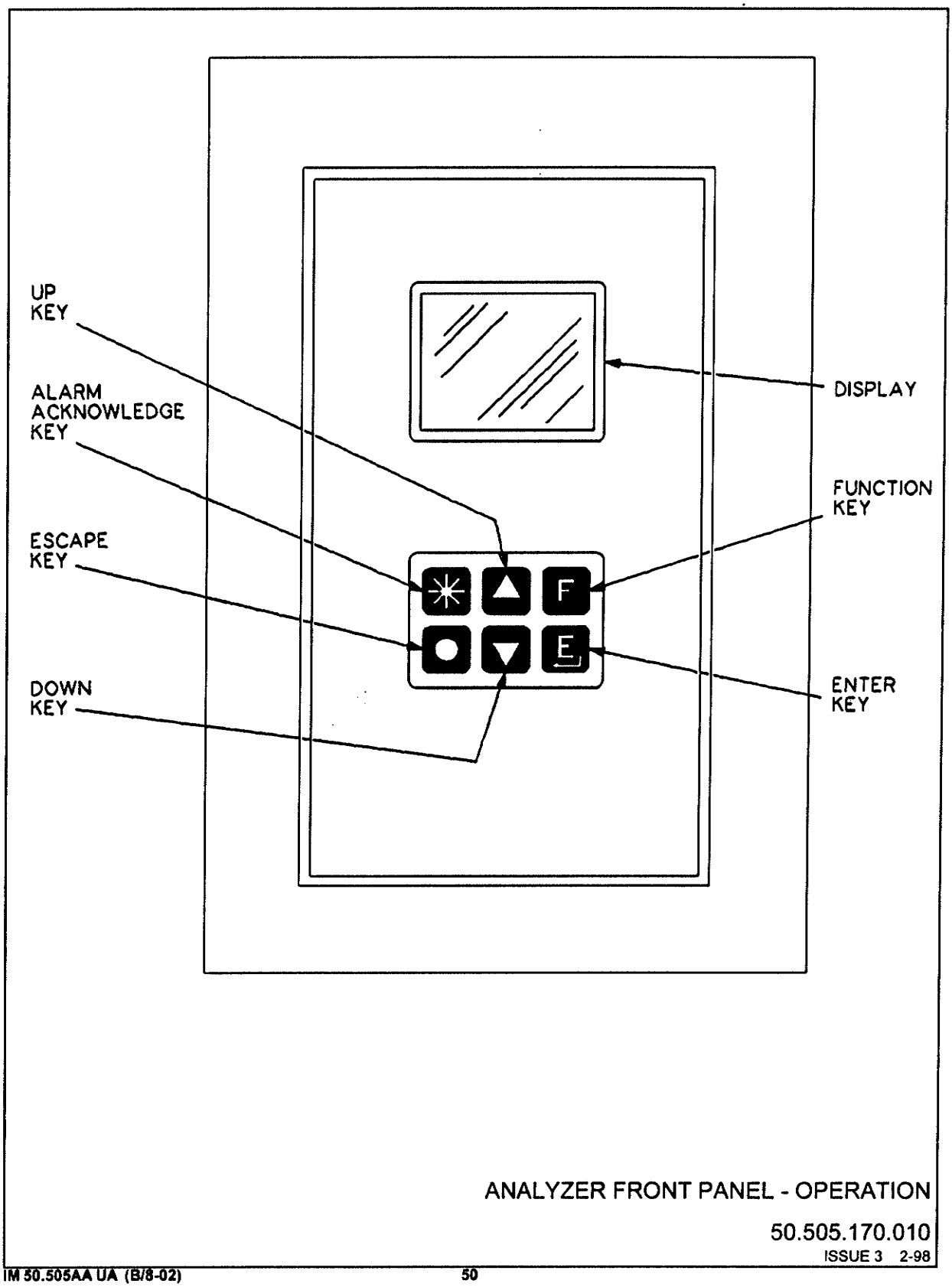

ANALYZER FRONT PANEL - OPERATION

50.505.170.010

ISSUE 3 2-98

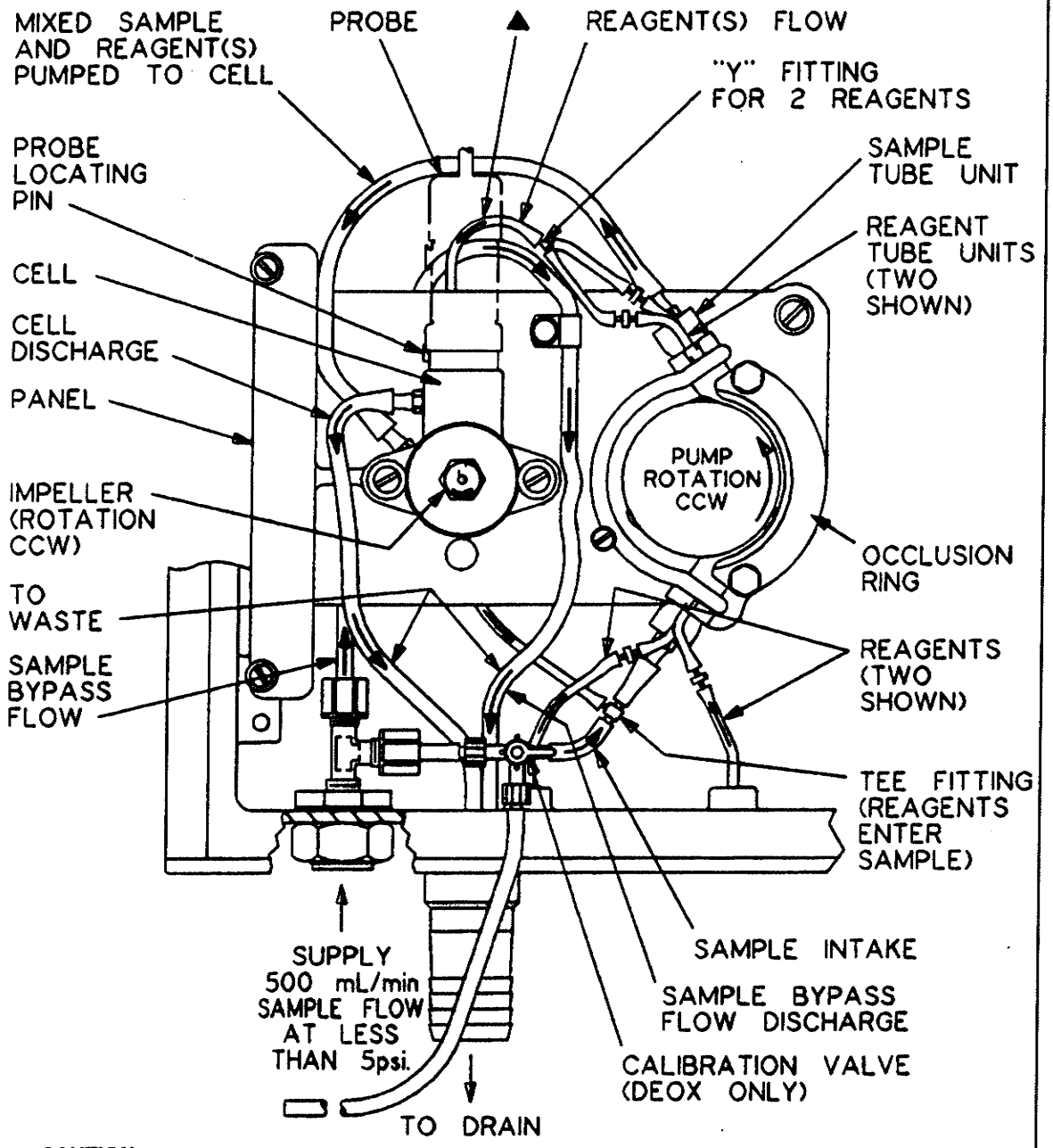

CAUTION: To prevent possible equipment damage, apply up to a maximum of 5 psi water pressure to the analyzer sample input. The tubing in the analyzer metering pump can not withstand more than 5 psi pressure. If pressure in excess of 5 psi is applied to the analyzer input, fluid may be sprayed from the analyzer metering pump inlet.

NOTE: ▲ THE LENGTH OF THIS TUBING FOR MICRO/2000 ANALYZERS IS SEVEN INCHES. THE LENGTH OF THIS TUBING FOR DEOX/2000 ANALYZERS IS EIGHT FEET TO ALLOW FOR SUFFICIENT CHEMICAL REACTION.

RESIDUAL ANALYZER - FLOW DIAGRAM

50.505.180.010

ISSUE 1 2-98

SECTION 4 - SERVICE

List Of Contents

PARA./DWG. NO.

General 4.1
Preventive Maintenance Recommendations 4.2
Sample Pump 4.2.1
Y-Strainer 4.2.2
Wearable Items Replacement 4.2.3
Probe 4.2.4
Tubing 4.2.5
Troubleshooting 4.3
General 4.3.1
System Self-Diagnostics 4.3.2
Impeller Drive 4.3.3
Metering Pump 4.3.4
Probe 4.3.5
Electronics 4.3.6
Probe and Circuit Boards Wiring 4.3.7
Special Service Instructions 4.4
Preparation of Reagents 4.4.1
Re-filling Reagent Reservoirs 4.4.2
Wetside Panel Removal and Replacement 4.4.3
Occlusion Ring Removal and Replacement 4.4.4
Pump Rotor, Rollers, and Thrust Washer Removal and Replacement 4.4.5
Pump Tubing Units Replacement 4.4.6
Pump Bearing Replacement 4.4.7
Impeller Shaft Seal Replacement 4.4.8
Impeller Motor Removal and Replacement 4.4.9
Impeller Shaft Replacement 4.4.10
Pump Motor Removal and Replacement 4.4.11
Probe Electrolyte and Electrodes 4.4.12
Probe Cleaning, Refilling, and Porous Element Replacement 4.4.13
Electronics 4.4.14
Warning/Caution Summary Page ..... 2 Pages
Illustrations
Service - U29086 Probe 50.510.150.010

4.1 General

Plan a regular maintenance program to ensure proper operation and avoid unplanned equipment downtime.

4.2 Preventive Maintenance Recommendations

4.2.1 Sample Pump

If the installation uses a sample pump, periodic maintenance ensures a reliable sample to the analyzer. Consult the manufacturer's literature for proper maintenance procedures and schedules. Gradually deteriorating pump performance is not usually evident to the operator, as over 95% of the sample discharge may be discarded through the bypass valves.

Adequate flow velocities through the sample lines must be maintained to minimize lag time and fouling that may result in a residual demand.

4.2.2 Y-Strainer (See Dwg. 50.500.002.011)

The Y-strainer (8) contains a porous plastic filter element that removes large particles from the sample flow to the analyzer. This element is continuously flushed by the bypass flow to drain. Depending upon the quality of the water being monitored and to prevent the need for frequent cleaning of the strainer element, a flow of at least 1 gpm may be necessary.

The strainer should be periodically cleaned. Throttling the bypass valve to force sufficient flow through a partially blocked filter accelerates the fouling.

Clean the filter as follows:

a. Turn off the flow to the analyzer.

b. Disconnect the drain line at the strainer bypass valve.

c. Unscrew the filter element cap and attached the fittings as a unit.

d. Remove and thoroughly clean the element by rinsing in clean water and wiping if necessary.

e. Reinstall the element and drain fittings. Ensure that the collar of the element points away from the cap. Restore the sample flow to the analyzer.

4.2.3 Wearable Items Replacement

The impeller shaft, impeller shaft seal, and the sample and reagent tubing units are wearable items. They should be inspected regularly for wear and replaced as needed. Recommended frequency of replacement is every six months to one year, as experience indicates.

When the occlusion ring is removed from the pump to inspect or replace the tubing units, check that the pump rollers rotate freely.

NOTE: Do not remove the occlusion ring with water pressure applied to the pump inlet, as water will flow through the pump sample tubing and possibly overflow the cell or spray from the disconnected tubing.

When the cell, grit guard, and seal adapter are removed to replace the shaft seal, inspect the shaft for wear where the seal rides. If noticeable wear or abrasion has occurred, replace the impeller shaft.

4.2.4 Probe

The probe cannot be disassembled (all joints are cemented) and is not serviceable except for the following maintenance operations.

NOTE: The analyzer will perform best when the probe is left undisturbed as much as possible.

Check the electrolyte level and refill as necessary.

Clean the electrodes by wiping with a clean paper towel. If there is a greasy film on the electrodes, this can be removed by cleaning with a paper towel dipped in alcohol. If there are hard deposits on the electrodes, this can be removed by wiping the electrodes with a clean paper towel dipped in muriatic acid (10% hydrochloric acid). The analyzer will require recalibration after 24 hours of operation after the electrodes are cleaned.

WARNING: HYDROCHLORIC ACID AND MURIATIC ACID WILL SEVERELY IRRITATE EYES AND CAUSE CHEMICAL BURNS TO SKIN. ALWAYS WEAR APPROPRIATE PROTECTIVE EQUIPMENT DURING HANDLING. WHEN DILUTING ACID, ALWAYS POUR ACID INTO THE WATER, NEVER POUR WATER INTO ACID. IT IS THE RESPONSIBILITY OF THE USER OF THE EQUIPMENT TO OBTAIN AND FOLLOW THE SAFETY PRECAUTIONS OF THE MANUFACTURER OF THE HAZARDOUS MATERIAL.

If the probe is to be stored for more than a week, the porous element should be removed and the electrolyte drained. The reservoir should be rinsed with distilled water to eliminate any remaining electrolyte. Otherwise, the electrode end must be kept wetted to prevent crystallization of the electrolyte in the pores of the element and clogging of the element.

The porous element can be removed and the electrolyte drained as follows: Using a self-tapping screw (a #6 drywall screw is preferred), tap into the porous element, then pull out the element. The element is approximately 1/4-inch long. This porous element is no longer useable. The electrolyte will drain out slowly. Rinse the reservoir well with distilled water to remove residual electrolyte. When removing the element in this manner, use care not to scar the sides of the element bore as this might prevent insertion of a new piece of porous material or cause excessive leakage of the electrolyte.

A new porous element can be created and installed as follows: Do not precut the porous material to length. A clean, sharp razor blade is required to make a clean cut in the porous material. First, using a sawing motion, slice off a thin slice of one end of a length of the porous material. This fresh cut end is then pressed into the element bore. The fit should be snug. The material should be embedded to a 1/4-inch to 3/8-inch depth. Next, saw off most of the remaining material. Finally, taking care not to damage the probe end, shave off the remaining material so that the element is flush.

It is recommended to periodically replace the probe reference junction and electrolyte. Rinse the reservoir with distilled water, twice, before adding new electrolyte. Recommended frequency of replacement is every 12 months (more frequently if contamination or junction clogging occurs).

This is also a good time to inspect the electrodes for wear and the probe for signs of deterioration.

4.2.5 Tubing

It is recommended to replace all flexible tubing once a year.

4.3 Troubleshooting

4.3.1 General

Sources of trouble are of four types: mechanical, chemical, electronic/electrical, and software (bugs). The frequency of occurrence is approximately in the order indicated. Mechanical problems are the easiest to locate, or rule out.

Sources of malfunction can be located, or ruled out, by performing the routine checks described in the Section 3 - Operation.

System fault messages can be helpful when diagnosing problems. The messages are brief, but an experienced operator can immediately recognize the probable cause of a system fault message. If a fault message is indicated, first acknowledge the condition by pressing the Acknowledge key. This will terminate the associated alarm, if present, and allow the system to resume operation (if possible) until the condition is resolved. The fault message flashes periodically on the display until the condition is resolved.

The following requirements must be met for an analyzer to operate correctly:

- correct plumbing/tubing connections
- correct and steady flow and pressure of sample to the analyzer
- correct and steady flow of sample through the analyzer
- correct and steady flow of sample metered to the cell
- proper reagents (selection, mixture, and reservoirs not empty)
- correct and steady flow of reagents metered into the sample
- impeller turns smoothly (CCW) and rapidly (600rpm-60Hz, 500rpm-50Hz)
- cell body contains sample/reagents and grit
- sample/reagents drain through cell drain tube
- electrolyte in probe reservoir
- probe reference junction is not clogged
- temperature sensor functions properly
- electrode surface in good condition and not fouled by deposits
- probe functions properly
- probe and motors connected properly
- electronic circuits function properly
- proper installation wiring
- correct fuse, in good condition
- properly configured software
- correct calibration
- metering pump functions (CCW)
- trained operator has read and understood all parts of the instruction book

4.3.2 System Self-Diagnostics

Self diagnostic messages indicate conditions that might otherwise go unobserved. They aid the operator in avoiding or locating the cause of inaccurate performance. Refer to the description of conditions that cause error messages.

The Diagnostic functional group contains many functions that can provide information about poor or changes in system performance.

4.3.2.1 Measured Value

The measured value is repeated here, in addition to showing in the Main display. This is done so that it can be viewed easily, along with the diagnostic functions.

Additionally, the Main function measured value indicates values within the functional range only, so that it corresponds strictly with the 4-20 output. The measured value (Diagnostic Function) displays over the full limit of the amplifier stage of the electronics (as determined by the amplifier switch settings).

4.3.2.2 Response Slope

The response slope is the calibrated slope of the signal from the probe to the amplifier. Its value is fixed at the time of calibration. The amperometric (current) signal is proportional to the concentration of chlorine (or iodine) in the sample and the constant of proportionality is the response slope—with units of uA/(mg/l). While this value can vary somewhat from one probe to the next, due to variation in manufacture (a value in the range of 1 to 7 is accepted without warning), it should not vary by more than $\pm$ .2 from one calibration to the next. See paragraph 4.3.2.14, System Warnings - Slope Error. The slope is normally expected to be in the range of 1 to 10.

4.3.2.3 mA Output

The calculated mA output signal is reported here. If the mA signal or the chart recorder value does not agree with the calculated (indicated) value, check the range of both the analyzer and the chart recorder. If the ranges are set correctly, then the nominal value for the mA output can be calculated as: 16*measured value/range + 4. If the indicated mA is not correct for the range, check that the range is set correctly. If the value is as calculated, measure the mA signal (with an ammeter). If the output is not as measured, perform a mA calibration. For more information, see paragraph 3.2.4, I/O Options. This function can be toggled to display in "%" of range or "mA".

4.3.2.4 Cell Signal

This is the amperometric signal from the probe to the amplifier in uA (micro-amps). This signal is proportional to the chlorine (or iodine) con-

centration in the cell. If the amplifier gain switches are set correctly, the value reported for this signal is correct, as the signal is inferred from the anticipated switch setting after being amplified. This value is also used in calculating Response Slope, so, if the switch position is not correct, it can cause Slope Error.

4.3.2.5 Cell Voltage

It is one of the functions of the amplifier circuit to maintain a stable potential across the electrodes of the probe. The actual value is indicated here. This is compared to the Cell-Voltage setpoint, which is normally set to .25V, but can be checked or reset through the Cell Voltage Setpoint function in the Set-Up functional group.

4.3.2.6 Cell Temperature

The Cell Signal temperature is used in calculating the measured value. The temperature sensor is located in the wetted end of the probe. Pressing ENTER allows the indicated value to be toggled between degrees F and degrees C. The indicated temperature does not need to be extremely accurate (± 5 is acceptable). A reasonable displayed value for cell temperature confirms that the sensor is functioning.

4.3.2.7 Software Version

This information is needed for factory technical support. The software version consists of the EPROM part number and issue letter.

4.3.2.8 Unit Serial Number

This information is needed for factory technical support. The serial number consists of two letters and five digits. It is displayed at this point in the menu and should agree with the number on the label in the electronics enclosure (on wall mounted units) or on the back of the module.

4.3.2.9 System Restart

See Section 3 - Operation.

4.3.2.10 System Shutdown

This is not a Troubleshooting function. Refer to Section 3 - Operation for information.

4.3.2.11 Local Operating Mode

At this function, the operating mode can be toggled from "NORMAL" to "SERVICE" mode. The purpose of the service mode is to prevent unnecessary external alarms that may occur while performing certain types of service (e.g., probe removal for inspection).

In the service mode, the relay outputs are frozen in their non-alarm states and the mA output is frozen.

The analyzer will not automatically return to the main display once placed in the service mode. The operating mode is automatically reset to normal (re-enabling alarms) when exiting (escaping from) the Diagnostic Group.

4.3.2.12 Extended Calibration Methods

This is not a Troubleshooting function. Refer to Section 3 - Operation for information.

4.3.2.13 System Error Messages

All system error messages are discussed below. They are grouped as system warning or system failure messages, along with an explanation of the cause and remedy for each error condition.

SYSTEM WARNINGS	SYSTEM FAILURES
CELL VOLTAGE DEVIATION	CELL VOLTAGE OUT OF RANGE
LOSS OF TEMPERATURE COMPENSATION	CHECK PROBE CONNECTION
HIGH ALARM	CHECK PROBE JUNCTION
LOW ALARM	CELL INPUT SATURATED
HIGH mA LOOP IMPEDANCE	
SLOPE ERROR	

4.3.2.14 System Warnings

The system can continue to operate during a system warning condition, even though the warning may be a condition resulting from inaccurate user input or might indicate a condition that prevents the analyzer from operating accurately. When a warning condition occurs, the display is blanked, except for the message, until the message is acknowledged. The unit then returns to operation with a normal display and the warning

flashed every 30 seconds. Some conditions can cause multiple warnings or warnings and failures. Each message must then be separately acknowledged.

- CELL VOLTAGE DEVIATION – This message occurs if the cell voltage has changed by more than 50mV from the setpoint value. This is an unusual condition that can be caused by readjusting the cell voltage without re-entering the setpoint, by a failure of the circuit, or by a faulty probe wiring connection.

- LOSS OF TEMPERATURE COMPENSATION – This error indicates that the temperature sensor has failed and that the analyzer is operating in an uncompensated mode. This message is also caused by a faulty electrical connection to the sensor and may be the first indication that the probe has been disconnected. On transition from compensated to uncompensated mode (on the failure of the sensor), the analyzer accuracy declines. The analyzer will operate, however, and can be reasonably accurate, once it is recalibrated, if the sample temperature does not change by more than 10°F (18°C), until the probe can be replaced or the reason for the apparent failure found.

- HIGH ALARM – This is a user-enabled warning that indicates the measured value is outside (above) the desired operating range.

- LOW ALARM – This is a user-enabled warning that indicates the measured value is outside (below) the desired operating range.

- HIGH mA LOOP IMPEDANCE – This message indicates a problem with the mA output operation. The output may be connected to a high impedance or there may be a fault in the connection.

- SLOPE ERROR – This error occurs on calibration. It indicates that the response slope is outside the normally expected range. The response slope is calculated from the ratio of the Cell signal (uA) to the net cell residual concentration (process concentration plus bias value) value. This condition most often indicates an inaccurate calibration, wrong range switch setting for the analyzer operating range, low cell output caused by loss of reagent feed or fouling of the probe, or high cell output caused by a failure of the probe.

If the gain switch positions are found to be incorrect, set them correctly, in accordance with the analyzer operating range.

4.3.2.15 System Failures

- CELL VOLTAGE OUT OF RANGE – This condition is like the Cell Voltage Deviation condition, except that this indicates that the voltage has deviated to the point that the analyzer can no longer function. The likely causes are a disconnected probe or faulty probe wiring, an improper cell voltage adjustment, or a circuit failure.

- CHECK PROBE CONNECTION – This message indicates that the probe has been disconnected. Due to the nature of the amplifier circuit, there may be a substantial delay between when the probe is disconnected and when the failure is first reported. Other error messages may be reported before this condition is detected.

- CHECK PROBE JUNCTION – This message indicates that the cell voltage is not measurable, indicating a failure in the electrical connection to the probe, a clogged porous element in the probe, or depleted electrolyte. See paragraph 4.3.5, Troubleshooting - Probe, or paragraph 4.2.4, Preventive Maintenance Recommendations - Probe.

- CELL INPUT SATURATED – This message indicates that the amplifier circuit is saturated. The unit is receiving more current than can be measured for the present range switch settings. This occurs when the measured concentration exceeds the range of the analyzer or if the switches are set incorrectly.

If the gain switch positions are found to be incorrect, set them correctly, in accordance with the analyzer operating range.

4.3.3 Impeller Drive

PROBLEM	PROBABLE CAUSE(S)	CORRECTIVE ACTION
DOES NOT TURN, TURNS SLOWLY, TURNS UNSTEADILY, NOISY.	Too much grit.	Remove excess grit. See paragraph 3.3.2.3.
	Shaft or shaft seal failure.	Replace shaft or shaft seal. See paragraph 4.4.8.
	Motor failure.	Check for incorrect or loose wiring. Replace motor.
	Motor adapter board failure.	Replace motor adapter board.

4.3.4 Metering Pump

PROBLEM	PROBABLE CAUSE(S)	CORRECTIVE ACTION
DOES NOT TURN, TURNS UNSTEADILY, NOISY.	Tubing or occlusion ring not installed correctly.	Remove occlusion ring and check that tubes are located in the roller grooves. Also check to make sure tubes are not crossed over each other.
	Rollers do not turn freely.	Remove rollers and inspect bores for damage and pins for wear. Clean or replace parts as required.
	Motor or bearing failure.	Remove motor and inspect motor and bearing. See paragraph 4.4.7.
	Motor adapter board failure.	Replace motor adapter board.
LEAKING SAMPLE OR REAGENTS	Fitting connections made improperly.	Check fittings.
	Tubing cut or worn.	Replace tubing.
	Leaks from cell or past the impeller shaft seal.	Inspect and replace cell or shaft seal as required.
NO SAMPLE OR REAGENT FLOW, FLOW INCORRECT.	Incorrect sample flow through analyzer.	Check sample flow through the analyzer bypass. Correct flow as required, check/ correct for clogged tubing.
	No reagents in reservoirs.	Refill reagent reservoirs.
	Occlusion ring installed incorrectly or loose.	Install occlusion ring correctly. Tighten occlusion ring.
	Reagent tubing or pump tubing units clogged.	Clear or replace tubing.

4.3.5 Probe

PROBLEM	PROBABLE CAUSE(S)	CORRECTIVE ACTION
ELECTROLYTE LEVEL LOW	Electrolyte level low through porous element.	Refill probe with electrolyte. (Fill hole in side of probe.)
ELECTROLYTE LEVEL LOW, MORE THAN ONCE A MONTH.	Leak in reference junction or probe body.	Check for excessive leakage from the porous element or lower probe body. Replace element or repair leak.
CLOGGED POROUS ELEMENT	Probe allowed to dry out.	Replace junction and electrolyte.
	Electrolyte contamination.	Replace junction and electrolyte regularly.
LOW CELL OUTPUT	Electrode covered with deposits:	
	Greasy deposits.	Add detergent to reagents. Clean probe with detergent.
	Hard deposits.	Maintain correct grit level. Clean probe with muriatic acid solution.
	Improper reagents.	Check/replace reagents.
	Improper reagent feed.	Check feed and connections. Replace tube units.
	Clogged porous element.	Replace porous element.
("SLOPE ERROR" - SLOPE < 1)	Wrong gain switch settings.	Check gain switch settings. (Set at or one level above software range.)
ELECTRODES DAMAGED	Too much grit.	Reduce amount of grit. See paragraph 3.3.2.3.
	Defective impeller shaft, causing impeller to wobble and hit probe.	Check for wobble. Replace impeller shaft.
	Probe improperly serviced; electrodes sanded or probe damaged in handling.	Check electrodes. Check/replace probe.
TEMPERATURE SENSOR FAILURE	Incorrect wiring.	Check and correct wiring between the wetside panel and CPU board.
	Failed sensor.	Replace probe.
GENERAL FAILURE DUE TO PROBE - HIGH CELL OUTPUT OR NO CELL SIGNAL	Contaminated porous element or electrolyte.	Replace porous element or electrolyte.

4.3.5 Probe (Cont'd)

PROBLEM	PROBABLE CAUSE(S)	CORRECTIVE ACTION
("SLOPE ERROR" - SLOPE < 7)	Wrong gain switch settings.	Check switch settings. (Set at or one level above software range.)
	Improper reagents.	Check/replace reagents.
GENERAL FAILURE DUE TO PROBE	Incorrect or failed wiring.	Check/correct wiring. Incorrect wiring can damage probe or may cause an upset to the probe, which requires electrolyte replacement and/or 24 hours to recover.
	Internal probe failure.	Replace probe.
	Damaged electrodes.	Replace probe.

4.3.6 Electronics

WARNING: TO AVOID ELECTRICAL SHOCK TURN POWER OFF BEFORE SERVICING.

TO AVOID ELECTRICAL SHOCK OR DAMAGE TO EQUIPMENT, AVOID CONTACT WITH CIRCUIT BOARD COMPONENTS WHILE MAKING ADJUSTMENTS.

TROUBLESHOOTING AND HARDWARE CALIBRATION OF THE ANALYZER IS PERFORMED WITH A MULTI-METER. ONLY PERSONNEL WHO ARE TRAINED WITH THIS EQUIPMENT AND WHO HAVE A COMBINED KNOWLEDGE OF PROPER SAFETY PRECAUTIONS AND USF/W&T EQUIPMENT SHOULD PERFORM ANY TROUBLESHOOTING AND/OR TESTING.

None of the circuit boards used in the analyzer are serviceable. The only serviceable parts are the fuse and output relays on the power supply board and the fuse on the motor adapter board.

4.3.6 Electronics (Cont'd)

PROBLEM	PROBABLE CAUSE(S)	CORRECTIVE ACTION
NO DISPLAY	Power failure.	Reset breaker or replace blown fuse.
	Display board disconnected.	Check/reconnect Display board ribbon cable (leads from CPU board to Display board).
	Software failure.	Toggle power (off/on at disconnect) to reset software.
	Defective Display board.	Replace Display board.
	Defective CPU board.	Replace CPU board.
	Defective Power Supply board.	Replace Power Supply board.
KEYPAD DOES NOT FUNCTION.	Alarm condition requires acknowledgement.	Press Alarm Acknowledge key.
	Keypad disconnected.	Check/connect keypad ribbon cable (located under Display board) from Display board to keypad.
	Software failure.	Toggle power (off/on at breaker) to reset software.
	Defective keypad.	Replace keypad.
	Defective Display board.	Replace Display board.
	Defective CPU board.	Replace CPU board.
BOTH PUMP AND IMPELLER MOTORS DO NOT TURN.	Blown fuse on Motor Adapter board.	Replace fuse.
	Incorrect or faulty wiring from terminal block to Motor Adapter board.	Inspect and correct wiring.
	Wetside control relay faulty or de-energized (during sample line dosing).	If relay is de-energized (Relay "D"), the condition should be indicated on the analyzer display. If relay should not be de-energized, check for power on "motors" terminal of analyzer terminal block. Replace relay.
PUMP OR IMPELLER MOTOR DOES NOT TURN, OR TURNS UNSTEADILY.	Loose or incorrect wiring from motor to the Motor Adapter board or between Motor Adapter board and terminal strip.	Inspect and correct wiring.
	Defective Motor board.	Replace Motor board.
	Defective Motor.	Replace Motor.

4.3.6 Electronics (Cont'd)

PROBLEM	PROBABLE CAUSE(S)	CORRECTIVE ACTION
mA OUTPUT DOES NOT FUNCTION, OR FUNCTIONS INCORRECTLY.	System failure alarm.	Check and repair the cause of the system failure alarm.
	mA output is locked during calibration procedure.	mA output will resume function upon completion of calibration. Exit calibration procedure.
	mA output is out of calibration.	Calibrate mA output.
	mA receiving device is out of calibration.	Calibrate mA receiving device.
	Loose or incorrect wiring or "High" mA loop impedance.	Tighten or correct wiring. Check receiving device input impedance.
RELAY OUTPUTS DO NOT FUNCTION CORRECTLY.	Software sense settings incorrectly set (normally energized/non-energized) or output connections made to wrong contacts.	Correct sense settings. See the Section 2.
	Loose or incorrect wiring.	Tighten or correct wiring.
	Loose or incorrect wiring between terminal strip and Power Supply board.	Tighten or correct wiring.
	Defective relay.	Replace relay.
	Defective Power Supply board.	Replace Power Supply board.

4.3.7 Probe and Circuit Boards Wiring

Refer to Dwg. 50.505.130.010 for an installation wiring diagram of the probe to the CPU board wiring, and of wiring to the power supply, relay outputs, digital input, and 4 to 20 mA output (to the CPU and power supply boards through the installation wiring terminal strip). Refer to Dwg. 50.505.010.020 for a depiction of the connections between the keypad and the display board, the display board and the CPU board, and the CPU board and the power supply board.

4.4 Special Service Instructions

WARNING: TO AVOID ELECTRICAL SHOCK, TURN OFF POWER BEFORE SERVICING.

TO AVOID ELECTRICAL SHOCK OR DAMAGE TO EQUIPMENT, AVOID CONTACT WITH CIRCUIT BOARD COMPONENTS WHILE MAKING ADJUSTMENTS.

WEAR RECOMMENDED PROTECTIVE EYEWEAR WHEN SERVICING THE WET COMPONENTS OF THE ANALYZER, PARTICULARLY WHEN SERVICING REAGENTS AND REAGENT LINES. THE ANALYZER USES CHEMICALS THAT CAN CAUSE SEVERE PERSONAL INJURY BY CHEMICAL BURNS ON CONTACT WITH EYES. RINSE ANY AREA OF CONTACT IMMEDIATELY. IF CHEMICALS CONTACT EYES, RINSE FROM EYES AND SEEK IMMEDIATE MEDICAL ATTENTION.

4.4.1 Preparation of Reagents

WARNING: PH4 BUFFER AND ACETIC ACID WILL SEVERELY IRRITATE EYES AND CAUSE CHEMICAL BURNS TO SKIN. ALWAYS WEAR APPROPRIATE PROTECTIVE EQUIPMENT DURING HANDLING. WHEN DILUTING ACID, ALWAYS POUR THE ACID INTO THE WATER, NEVER POUR WATER INTO ACID. USE CAUTION WHEN DISCONNECTING THE REAGENT TUBING AND AVOID CONTACT WITH ANY FLUID THAT DRIPS FROM THE OPEN END. IT IS THE RESPONSIBILITY OF THE USER OF THE EQUIPMENT TO OBTAIN AND FOLLOW THE SAFETY PRECAUTIONS OF THE MANUFACTURER OF THE HAZARDOUS MATERIAL.

CHEMICALS FOR INDUSTRIAL USE: VAPOR MAY BE HARMFUL IF INHALED AND MAY BE FATAL IF SWALLOWED. LIQUID MAY CAUSE SEVERE BURNS TO SKIN AND EYES. AVOID CONTACT WITH EYES, SKIN, OR CLOTHING. WASH THOROUGHLY AFTER HANDLING. IN CASE OF SPILL, SOAK UP WITH SAND OR EARTH.

WHEN SERVICING LIQUID REAGENT LINES, PUMPS, OR REFILLING RESERVOIRS, TURN OFF PUMPS (SEE PARAGRAPH 3.3.3, SHUT-DOWN/RE-START) TO AVOID POSSIBLE SQUIRTING OF REAGENT. OBSERVE ALL SAFETY PRECAUTIONS RECOMMENDED BY THE REAGENT MANUFACTURER OR SUPPLIER.

WARNING: HANDLE IN ACCORDANCE WITH MANUFACTURER'S RECOMMENDATIONS. DO NOT MIX WITH OTHER CHEMICALS. DISPOSE OF ANY CHEMICALS IN ACCORDANCE WITH ALL APPLICABLE FEDERAL, STATE AND LOCAL ENVIRONMENTAL REGULATIONS.

The type and number of reagents are determined by the specific application and residual requirements.

4.4.1.1 Preparation of pH4 Buffer

This reagent is available from USF/W&T premixed in one-gallon plastic bottles. It may also be made on-site as follows: dissolve 919 grams of sodium acetate, trihydrate in approximately 1.5 liters of distilled water, then mix with 1.73 liters of glacial acetic acid and dilute with distilled water to obtain one gallon of reagent solution.

WARNING: GLACIAL ACETIC ACID WILL SEVERELY IRRITATE EYES AND CAUSE CHEMICAL BURNS TO SKIN. ALWAYS WEAR APPROPRIATE PROTECTIVE EQUIPMENT DURING HANDLING. WHEN DILUTING ACID, ALWAYS POUR ACID INTO WATER, NEVER POUR WATER INTO ACID. IT IS THE RESPONSIBILITY OF THE USER OF THE EQUIPMENT TO OBTAIN AND FOLLOW THE SAFETY PRECAUTIONS OF THE MANUFACTURER OF THE HAZARDOUS MATERIAL.

4.4.1.2 Preparation of Potassium Iodide Solution

NOTE: Potassium iodide solution is used only in the measurement of total chlorine. Therefore, this section does not apply to analyzers installed to measure free chlorine or potassium permanganate.

Potassium iodide (KI) is added to distilled water and fed into the water sample by the metering pump when measuring total chlorine. The KI reacts with the various forms of chlorine present to release a proportional amount of iodine. The amount of KI required is dependent upon the maximum range of the analyzer.

The quantity of KI required is calculated as follows:

50 + 4 * range = grams KI

Example: Analyzer range: 5 mg/l

50 + 4 * 5 = 70 grams KI

CAUTION: Never mix potassium iodide (KI) with sulfuric acid, as free iodine will form immediately.

KI Consumption - Grams									
Range	.1	.2	.5	1	2	5	10	20	50
KI grams/gal	50	51	52	54	58	70	90	130	250

KI either in tablets or in granular form may be used. When using auxiliary KI tablets (U11829), one tablet equals 3 grams.

4.4.1.3 Preparation of Ammonium Sulfate Solution

Ammonium sulfate is used to eliminate free chlorine interference in analyzers monitoring potassium permanganate or chlorine dioxide residuals. It should be purchased in crystal form, technical or reagent grade. The crystal is then mixed with distilled water in the proportion of 36 grams per gallon of solution per maximum mg/l of free chlorine residual expected in the sample water. For example, if a residual of approximately 0.5 mg/l of free chlorine is the highest concentration normally expected then the reagent should be mixed as 18 grams (36 x 0.5) of ammonium sulfate with enough distilled water to make one gallon of solution.

4.4.1.4 Detergent Additive

Detergent additive (UXA29142 - one gallon, or U29142 - six ounce) is used to aid in cleaning and wetting of the system while the analyzer is in operation. Add one ounce of additive to one gallon of KI solution.

To avoid cross contamination of the reagents, always use the same reservoir for the same reagent. The reservoirs should be clearly labeled with the reagent they contain.

Use a funnel when filling reagent reservoirs. Refer to paragraph 4.4.2 for instructions on re-filling the reservoirs once the analyzer is in operation.

4.4.2 Refilling Reagent Reservoirs

WARNINGS: TO AVOID POSSIBLE SEVERE PERSONAL INJURY OR EQUIPMENT DAMAGE, OBSERVE THE FOLLOWING:

PH4 BUFFER AND ACETIC ACID WILL SEVERELY IRRITATE EYES AND CAUSE CHEMICAL BURNS TO SKIN. ALWAYS WEAR APPROPRIATE PROTECTIVE EQUIPMENT DURING HANDLING. WHEN DILUTING ACID, ALWAYS POUR THE ACID INTO THE WATER, NEVER POUR WATER INTO ACID. USE CAUTION WHEN DISCONNECTING THE REAGENT TUBING AND AVOID CONTACT WITH ANY FLUID THAT DRIPS FROM THE OPEN END. IT IS THE RESPONSIBILITY OF THE USER OF THE EQUIPMENT TO OBTAIN AND FOLLOW THE SAFETY PRECAUTIONS OF THE MANUFACTURER OF THE HAZARDOUS MATERIAL.

CHEMICALS FOR INDUSTRIAL USE: VAPOR MAY BE HARMFUL IF INHALED AND MAY BE FATAL IF SWALLOWED. LIQUID MAY CAUSE SEVERE BURNS OF SKIN AND EYES. AVOID

CONTACT WITH EYES, SKIN, OR CLOTHING. WASH THOROUGHLY AFTER HANDLING. IN CASE OF SPILL, SOAK UP WITH SAND OR EARTH.

To avoid cross contamination of the reagents, always use each reservoir for the same reagent. The reservoirs should be clearly labeled with the name of the reagent they contain.

To fill reagent reservoirs, loosen and move or remove the threaded cap on the reservoir. Use a funnel when filling reagent reservoirs. The use of a funnel allows the reservoir to be filled without removing the rigid length of tubing from the reservoir. If the tubing is removed from the reservoir, keep it clean. Dirt can clog the tubing. If the tubing is removed from the reservoir while the metering pump is operating, air is drawn into the tubing. This causes a momentary disruption of service until the tubing is returned to the reservoir and the inducted air is purged from the tubing and pump.

4.4.3 Wetside Panel Removal and Replacement (See Dwg. 50.505.000.010)

a. Shut off sample flow to the analyzer.

b. Disconnect the probe and motor connectors from the connection to the electronics enclosure.

c. Remove the probe and set it carefully aside. Do not rest it on its electrode end. If the probe will be removed for more than an hour, place it, with the electrodes, in a beaker of water.

d. Disconnect the liquid reagent tubing from the inlet and discharge of the metering pump.

e. Disconnect the water sample tube from the metering pump inlet.

f. Move the bypass discharge sample tube from in front of the wetside panel.

g. Remove the clamp holding the pump and impeller motor cables.

h. Remove the three screws holding the panel in the enclosure, and remove the panel from the enclosure.

i. Hold the panel upright while removing it to avoid spilling water trapped in the cell. In an appropriate location, tip the panel upside down to empty the water from the cell. There is also water trapped in the various tubing units and chemical trapped in the reagent tube units.

4.4.4 Occlusion Ring Removal And Replacement (See Dwg. 50.505.010.010)

WARNING: TO AVOID POSSIBLE SEVERE PERSONAL INJURY OR EQUIPMENT DAMAGE, OBSERVE THE FOLLOWING:

TURN OFF THE FLOW TO THE ANALYZER BEFORE REMOVING THE OCCLUSION RING FROM THE METERING PUMP. THE OCCLUSION RING STOPS THE FREE FLOW OF LIQUID THROUGH THE ANALYZER SAMPLE LINES. IF IT IS REMOVED WITH FLOW STILL PRESENT AT THE ANALYZER, PROCESS WATER WILL BE SPRAYED FROM THE PUMP DISCHARGE LINE AND FROM THE CELL TOP. SPRAYED PROCESS WATER CAN CREATE AN ELECTRICAL SHOCK HAZARD DUE TO THE PRESENCE OF DANGEROUS VOLTAGE POWERING THE IMPELLER AND PUMP MOTORS.

DO NOT SERVICE THE METERING PUMP WHILE IT IS TURNING, THE METERING PUMP HAS ENOUGH TORQUE TO CAUSE SEVERE PERSONAL INJURY IF HANDS ARE PINCHED IN THE ROTATING PARTS. DISCONNECT THE PUMP MOTOR CONNECTOR BEFORE SERVICING THE PUMP.

WEAR RECOMMENDED PROTECTIVE EYEWEAR WHEN SERVICING THE WET COMPONENTS OF THE ANALYZER, PARTICULARLY WHEN SERVICING REAGENTS AND REAGENT LINES. THE ANALYZER USES CHEMICALS THAT CAN CAUSE SEVERE PERSONAL INJURY BY CHEMICAL BURNS ON CONTACT WITH EYES. RINSE ANY AREA OF CONTACT IMMEDIATELY. IF CHEMICALS CONTACT EYES, RINSE FROM EYES AND SEEK IMMEDIATE MEDICAL ATTENTION.

- Removal:

  a. Disconnect power to the wetside of the analyzer by disconnecting the pump motor, impeller motor, and probe from the panel connectors (to the electronics enclosure).

  b. Turn off the water supply to the analyzer.

  c. Remove the wetside panel (optional). See paragraph 4.4.3, Wetside Panel Removal and Replacement.

  d. Using a 7/16-inch socket wrench, remove the two bolts (with washers) attaching the occlusion ring to the panel. Lift off the

occlusion ring. Some residue from the tube units accumulates on the ring during usage. This is normal.

- Replacement:

The occlusion ring may be difficult to reinstall if the following procedure is not followed. Do not use excessive force. Use care not to pinch the tube units (installed on the pump rollers) when installing the occlusion ring. Before reinstalling the occlusion ring, check that the pump tube units are properly seated in the roller grooves and in the tube retainer grooves. See paragraph 4.4.6, Pump Tubing Units Replacement.

a. Place the occlusion ring loosely in place over the tube units, but do not attempt to clamp the occlusion ring in place yet.

b. Hold the ring in place with one hand and slide a bolt, with washer, into the lower mounting hole in the ring until it bottoms against the casting.

c. Gently squeeze the ring against the tubing while pushing the bolt into place. The bolt will drop (about 1/4 inch) into place when the ring is properly located.

d. Tighten this first bolt a few turns, so that the occlusion ring will pivot on the bolt.

e. Slide the second bolt (and washer) into its mounting hole in the ring.

f. Firmly squeeze the ring against the pump rotor (squeeze near the second bolt) to obtain leverage against the pivot bolt until the second bolt drops into place.

g. Tighten both bolts securely.

4.4.5 Pump Rotor, Rollers, and Thrust Washer Removal and Replacement

The rotor is fastened to the motor shaft by a set screw requiring a 3/32-inch Allen wrench for adjustment.

When the rotor body is removed, check the rollers, roller shafts, thrust washer, the shaft bearing, and shaft bore in the rotor body for signs of excessive wear, damage, or corrosion. Some residue on the roller shafts and inside the rollers is normal. The rotors should function properly for

at least one to two years. Do not lubricate the rollers, as some greases may attack the nylon roller material. Lubrication of the rollers is not necessary. If any of the roller shafts show significant wear marks and the corresponding roller is loose, the rollers and rotor body unit must be replaced.

- Removal

  a. Remove the wetside panel from the enclosure.

  b. Remove the occlusion ring from the panel unit.

  c. Remove the sample and reagent tube units from the panel unit.

  d. Locate the set screw in the hub of the rotor body (just behind the back face of the body) and loosen the set screw one or two turns.

NOTE: **Hold the panel upright while removing the rotor body to avoid dropping and losing the rollers. To use as a guide for reinstallation, take note of the orientation of the rollers (small groove toward the front of the panel) before removing the rotor.**

  e. Slide the rotor body off the motor shaft.

  f. The thrust washer (located against the panel assembly) should be removed and set aside so that it does not drop off the panel and become lost.

- Reinstallation

  a. If the thrust washer was removed, reinstall it over the pump hub, against the panel.

  b. Install the rollers on their shafts in the position noted during the removal of the rotor (small groove toward front).

  c. Look into the shaft bore in the rotor body and adjust the set screw until it just protrudes into the bore (approximately a half turn). The set screw protruding into the bore helps to locate it on the flat of the shaft as the rotor assembly is installed.

  d. Note the position of the flat on the pump shaft and slide the rotor assembly onto the shaft with the set screw over the flat.

     The shaft bore has a sliding fit on the shaft, so there may be a slight resistance to the sliding. If the resistance seems excessive, back-

off the set screw a quarter turn and twist the rotor body back and forth slightly as it slides back onto the shaft.

e. Tighten the set screw gently, until it begins to lock in place, on the flat on the shaft. Be sure that the hub of the rotor is flush against the pump hub (but without pressure) when the set screw is tightened. Using the Allen wrench, tighten the set screw as firmly as is practical. Use pliers to apply additional torque, but not so much as to permanently deform the Allen wrench.

NOTE: If the set screw is not tightened sufficiently, the rotor may wobble on the shaft or may slip on the shaft, damaging the shaft and causing the pump to not operate properly.

4.4.6 Pump Tubing Units Replacement

WARNING: TURN OFF THE FLOW TO THE ANALYZER BEFORE REMOVING THE OCCLUSION RING FROM THE METERING PUMP. THE OCCLUSION RING STOPS THE FREE FLOW OF LIQUID THROUGH THE ANALYZER SAMPLE LINES. IF IT IS REMOVED WITH FLOW STILL PRESENT AT THE ANALYZER, PROCESS WATER WILL BE SPRAYED FROM THE PUMP DISCHARGE LINE AND FROM THE CELL TOP. SPRAYED PROCESS WATER CAN CREATE AN ELECTRICAL SHOCK HAZARD DUE TO THE PRESENCE OF DANGEROUS VOLTAGE POWERING THE IMPELLER AND PUMP MOTORS.

DO NOT SERVICE THE METERING PUMP WHILE IT IS TURNING, THE METERING PUMP HAS SUFFICIENT TORQUE TO CAUSE SEVERE PERSONAL INJURY IF HANDS ARE PINCHED IN THE ROTATING PARTS. DISCONNECT THE PUMP MOTOR CONNECTOR BEFORE SERVICING THE PUMP.

WEAR RECOMMENDED PROTECTIVE EYEWEAR WHEN SERVICING THE WET COMPONENTS OF THE ANALYZER, PARTICULARLY WHEN SERVICING REAGENTS AND REAGENT LINES. THE ANALYZER USES CHEMICALS THAT CAN CAUSE SEVERE PERSONAL INJURY BY CHEMICAL BURNS ON CONTACT WITH EYES. RINSE ANY AREA OF CONTACT IMMEDIATELY. IF CHEMICALS CONTACT EYES, RINSE FROM EYES AND SEEK IMMEDIATE MEDICAL ATTENTION.

The sample and reagent tube units include glued stop rings and adapters and fittings. Replace the entire unit when required.

The tube units should provide approximately six months of service, but should be observed monthly (without disturbing the analyzer) for signs of wear or leakage. If either condition is noticed, replace the suspected tube units immediately.

Remove the tube units only when replacement units are readily available, so there is no confusion about how to reconnect the new tube units. Refer to Dwg. 50.505.180.010 (in Section 3) when installing the tube units.

- Removal of the tube segments is as follows:

  a. Disconnect power to the wetside of the analyzer by unplugging the pump and impeller motor connectors

  b. Disconnect the sample and reagent tubing from the fittings at the ends of the tubing segments. The fittings are replaced with the tube units.

  c. Remove the occlusion ring mounting bolts (requires a 7/16-inch socket).

  d. Remove the tube units.

- Installation of tube units (refer to Figure 4.1):

  a. Remove the occlusion ring (F).

  b. Remove the old tube units (A or B) (if replacing).

  c. Both reagent tube units (A) fit into the small groove (J) on the tube retainer (G), as well as into the small groove (H) on the rollers (E).

     The sample tube unit (B) fits into the large groove (K) on the tube retainer (G) and the large groove (I) on the rollers (E).

     Guide the (new) tube unit through the small (J) or large (K) groove in the lower end of the tube retainer (G) and slide the unit up through the groove until the lower tube stop (M) is against the outer surface of the tube retainer (G).

  d. Lay the tube unit (A or B) over the pump rollers (E) in the small (H) or large (I) groove, toward the front of the pump rollers. If two reagent tube units (A) are installed, ensure that the tubes lay side by side and do not cross when placed over the rollers (E).

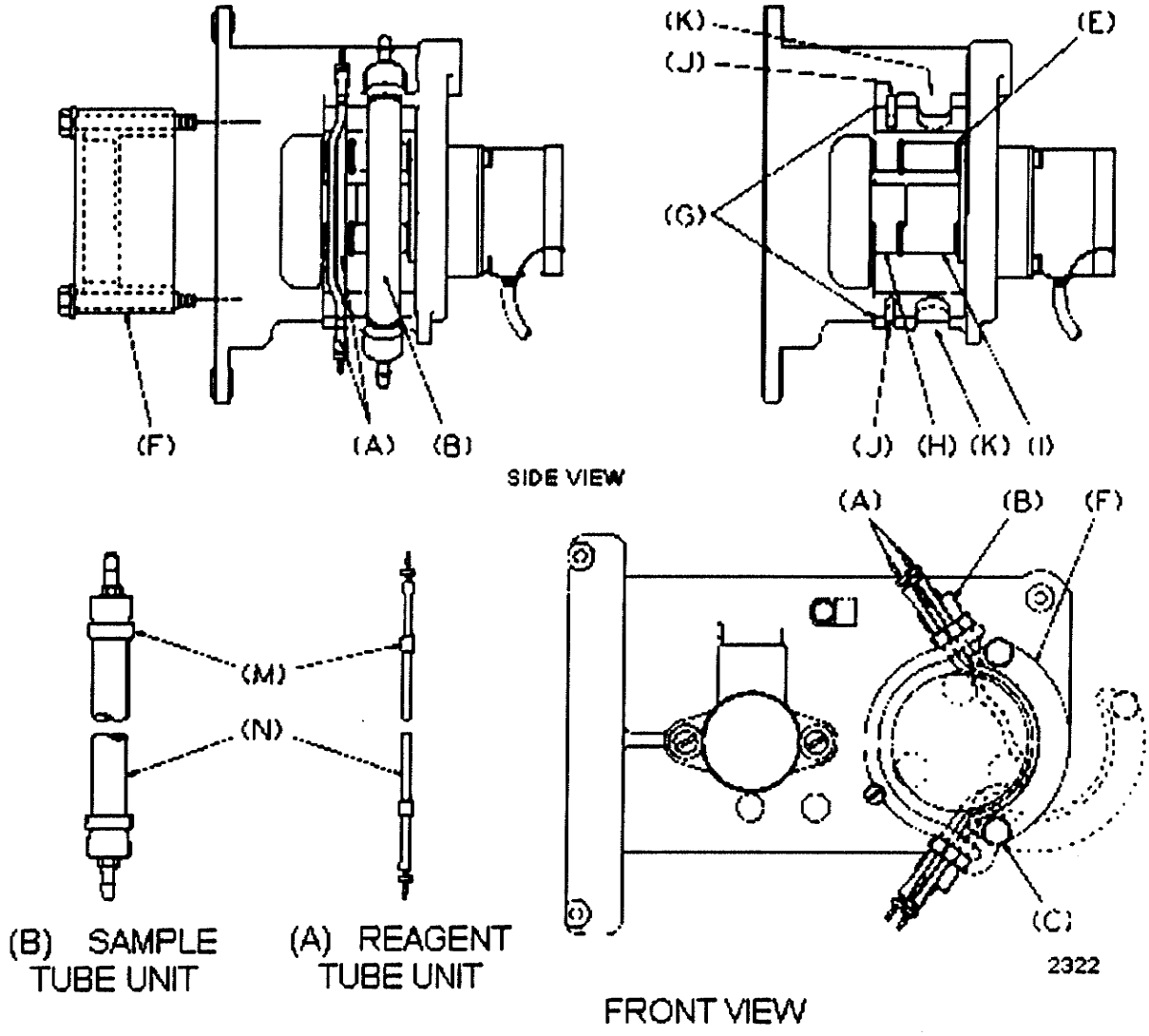

Figure 4.1

NOTE: If the pump is operated with the reagent tube units crossed, the tube units may be damaged.

e. Stretch the tubing (N) slightly and guide it through the small (J) or large (K) groove in the upper end of the tube retainer (G), with the upper tube stop (M) above the top surface of the upper end of the tube retainer (G). When tension on the tubing is released, the tube stops should be against the outside surfaces of tube retainer.

f. Check that the tube units (A or B) are in their proper small (H) or large (I) groove in the roller (E). Check that the reagent tubes do not cross.

g. Replace the occlusion ring, so that the larger inside radius (in which the sample tubing (B) rides) is facing away from the operator. Locate and start the lower mounting bolt (C) before attempting to squeeze the occlusion ring against the tubing. Then secure the second mounting bolt.

The tubing exerts side pressure on the retaining bolts, causing some tendency for cross-threading of the bolts as they are reinstalled. **Do not** force the bolts. If they do not turn smoothly, remove them and install them again.

4.4.7 Pump Bearing Replacement

a. Remove the wetside panel from the analyzer.

b. Remove the pump occlusion ring, tube units, rotor body (with rollers), and thrust washer from the front of the wetside panel.

c. Remove the pump motor from the rear of the wetside panel.

d. Drive the bearing out of the front of the casting using the square end of a rod that is approximately 1/2 inch in diameter by 4 inches long. (A socket wrench socket on an extension will work.) Use care not to scar the bore in which the bearing is pressed.

e. Tap in the new bearing until it is flush with the end of the bearing support. Place the long side of a flat bladed screwdriver over the bearing face and tap with a hammer. Make sure the new bearing is square to the bearing support bore.

4.4.8 Impeller Shaft Seal Replacement

- Removal of the Impeller Shaft Seal:

a. Disconnect power to the wetside of the analyzer by unplugging the pump and impeller motor connectors.

b. Remove the probe from the cell body. Make sure the probe electrodes are not scratched or damaged. Lay the probe on its side so that the electrodes do not contact any surface, but in a position so that the electrolyte does not leak from reservoir fill hole.

c. Remove the cell body retaining screws and remove the cell body. When removing the cell body take notice of the O-ring that seals

the cell body against the seal adapter. This O-ring may cling to the cell body and then fall off.

d. Use a 3/32-inch Allen wrench to loosen the set screw holding the impeller on the shaft. This set screw leaves a noticeable mark on the shaft. If the shaft is not replaced, reinstall the impeller in the same position. Tighten the set screw until snug.

e. Slide the grit guard off the shaft.

f. Slide the seal adapter, with the seal, off the shaft.

g. Using a pair of needle nose pliers, grab the center of the seal and remove it from the front of the adapter.

h. Rinse the grit from the cell body, cell body sealing O-ring, impeller, and seal adapter. Wipe the sealing surfaces and the shaft (gently) with a paper towel to remove all grit and residue.

i. Check the shaft for signs of unusual wear, which indicates that it needs replacement. Refer to Impeller Shaft Replacement instructions.

- Installation of Shaft Seal:

a. If not already done while removing old shaft seal, rinse grit from the cell body, cell body sealing O-ring, impeller, and seal adapter. Wipe the sealing surfaces and the shaft (gently) with a paper towel to remove all grit and residue.

b. Apply a small quantity of silicone grease to the back side (the front side is the concave side) of the new seal before installation into the seal adapter.

c. Install the seal into the seal adapter, making sure the edges are fully seated (flush with the inside diameter of the seal adapter).

d. Slide the seal adapter over the impeller shaft until it seats in the panel. Wipe any excess grease from the front of the shaft.

e. Slide the grit guard (small end first) onto the shaft and up against the seal adapter.

f. Slide the impeller onto the shaft, up to the grit guard. Retighten the set screw until just snug.

g. Install the cell body sealing O-ring on the front of the seal adapter.

h. Install the cell body with the retaining screws and washers.

i. Replace the probe.

j. Restart the analyzer.

k. Once the flow is restarted and the cell body is full of sample, replace the grit.

4.4.9 Impeller Motor Removal and Replacement

- Removal

  a. Remove the panel assembly from the analyzer enclosure. See paragraph 4.4.3, Wetside Panel Removal and Replacement.

  b. Remove the cell body, impeller, and shaft seal adapter from the front of the panel assembly. See paragraph 4.4.8, Impeller Shaft Seal Replacement.

  c. Turn the panel over and remove the ground lug screw and motor mounting screws.

  d. Remove the motor with the impeller shaft.

  e. If the motor is being replaced, remove the impeller shaft and coupling from the motor.

- Replacement

  Replacement is basically the reverse sequence of removal. Grease the impeller shaft seal, with suitable silicone grease, before reinstalling it on the front of the panel assembly.

WARNING: ALWAYS RECONNECT THE GROUNDING LEADS WHEN REMOVED OR BROKEN. GROUNDING LEADS ARE PROVIDED FOR SAFETY, TO PREVENT INJURY FROM ELECTRICAL SHOCK.

Be sure to reconnect both motor ground leads to the back of the panel before reinstalling the panel in the analyzer.

Motor replacement is the reverse sequence of removal.

Be sure to reattach the motor ground leads before replacing the panel assembly in the analyzer.

4.4.10 Impeller Shaft Replacement

- Impeller Shaft Removal:

  a. Disconnect power to the wetside of the analyzer by unplugging the pump and impeller motor connectors.

  b. Stop the flow of sample to the analyzer.

  c. Disconnect the sample and reagent tubing from the metering pump inlet.

  d. Remove the cell body, impeller, grit guard, cell sealing O-ring, and seal adapter as described in paragraph 4.4.8, Impeller Shaft Seal Replacement.

  e. Remove the panel assembly from the analyzer.

  f. Disconnect the impeller motor grounding terminal.

  g. Remove the impeller motor mounting screws and washers. Remove the impeller motor.

  h. Loosen the impeller shaft retaining setscrew using a 3/32-inch Allen wrench.

  i. Remove the impeller shaft from the coupling.

- Impeller Shaft Installation:

  a. If the impeller shaft coupling is removed from the impeller motor install the coupling on the motor shaft against the front face of the motor. Tighten the retaining setscrew (using a 3/32-inch Allen wrench).

  b. Slide the impeller shaft into the coupling until it bottoms against the end of the motor shaft. Tighten the retaining setscrew snugly (using a 3/32-inch Allen wrench), about 1/4 turn past the first resistance.

  c. Mount the impeller motor on the back of the panel with the retaining screws and washers.

d. Fasten the impeller motor grounding terminal (with pump motor grounding terminal) on the back of the panel with the retaining screw and serrated lockwasher.

e. Remount the panel in the analyzer.

f. Reattach the sample and reagent tubing to the inlet of the metering pump.

g. Apply a small quantity of silicone grease to the O-ring and impeller shaft.

h. Reinstall the seal adapter, grit guard, cell sealing O-ring, impeller, and cell body and cell retaining screws, as described in paragraph 4.4.8, Impeller Shaft Seal Replacement - Installation of Shaft Seal.

4.4.11 Pump Motor Removal and Replacement

a. Remove the panel assembly from the analyzer enclosure. Refer to paragraph 4.4.3, Wetside Panel Removal and Replacement.

b. Remove the pump rotor and thrust washer from the panel assembly. Refer to paragraph 4.4.5, Pump Rotor, Rollers, and Thrust Washer Removal and Replacement.

c. Turn the panel over and disconnect the motor ground lead from the back of the panel.

d. Turn the panel over again (to its original position) and remove the two screws that mount the motor to the panel.

e. Gently slide the motor out from the back of the panel. The motor shaft has a sliding fit inside the ball bearing in the pump hub. If it binds while trying to slide it out, check the exposed portion of the shaft for dirt or scratches that may cause binding. Clean off the dirt or carefully remove scratches with a fine file. The shaft can be damaged by excessive filing.

4.4.12 Probe Electrolyte and Electrodes

The analyzer performs best when the probe is left undisturbed as much as possible. Manual cleaning of the probe electrodes should not be done unless necessary, as this will require recalibration of the analyzer.

CAUTION: Do not sand the probe electrodes! The electrodes are made of a thin film of platinum and cannot be replaced or repaired. If sanded, this thin film of platinum will be quickly removed and the probe will no longer function. If cleaning is necessary, a clean paper towel may be used.

Check the electrolyte level occasionally and maintain the level so that it is at least visible through the clear section of the probe with the probe in the installed position. If the electrolyte level drops noticeably in less than a month, the porous element is leaking excessively. The porous element is intended to allow a slight flow of electrolyte and excessive flow will not harm the performance of the analyzer unless the probe is allowed to run out of electrolyte. If excessive use of electrolyte becomes a nuisance (requires constant monitoring of the level), replace the porous element and check the element bore for damage that would hinder the sealing around the element.

Also, check if the electrolyte has become contaminated. This is usually indicated by a color change or by the electrolyte becoming watery. It is not unusual for the electrolyte to become alternately cloudy and then clear, this can be caused by changes in water or ambient temperature.

4.4.13 Probe Cleaning, Refilling, and Porous Element Replacement

The probe cannot be disassembled (all joints are cemented). It is not serviceable except for the following maintenance operations.

NOTE: The analyzer will perform best when the probe is left undisturbed as much as possible.

Check the electrolyte level and refill as necessary.

Clean the electrodes by wiping with a clean paper towel. If there is a greasy film on the electrodes, this can be removed by cleaning with a paper towel dipped in alcohol. If there are hard deposits on the electrodes, this can be removed by wiping the electrodes with a clean paper towel dipped in muriatic acid (10% hydrochloric acid). The analyzer will require recalibrations after 24 hours of operation after the electrodes are cleaned.

WARNING: HYDROCHLORIC ACID AND MURIATIC ACID WILL SEVERELY IRRITATE EYES AND CAUSE CHEMICAL BURNS TO SKIN. ALWAYS WEAR APPROPRIATE PROTECTIVE EQUIPMENT DURING HANDLING. WHEN DILUTING ACID, ALWAYS POUR ACID INTO THE WATER, NEVER POUR WATER INTO ACID. IT IS THE RESPONSIBILITY OF THE USER

OF THE EQUIPMENT TO OBTAIN AND FOLLOW THE SAFETY PRECAUTIONS OF THE MANUFACTURER OF THE HAZARDOUS MATERIAL.

If the probe is to be stored for more than a week, the porous element should be removed, the electrolyte drained, and the reservoir should be rinsed with distilled water to eliminate any remaining electrolyte. Otherwise the electrode end must be kept wetted to prevent crystallization of the electrolyte in the pores of the element and clogging of the element.

The porous element can be removed and the electrolyte drained as follows: Using a self-tapping screw (a #6 drywall screw is preferred), tap into the porous element, then pull out the element. The element is approximately 1/4-inch long. This porous element is no longer usable. The electrolyte will drain out slowly. Rinse the reservoir well with distilled water to remove residual electrolyte. When removing the element in this manner, use care not to scar the sides of the element bore as this might prevent insertion of a new piece of porous material or cause excessive leakage of the electrolyte.

A new porous element can be created and installed as follows: Do not precut the porous material to length. A clean, sharp razor blade is required to make a clean cut in the porous material. First, using a sawing motion, slice off a thin slice of one end of a length of the porous material. Press this fresh cut end into the element bore. The fit should be snug. The material should be embedded to a 1/4-inch to 3/8-inch depth. Next, saw off most of the remaining material. Finally, taking care not to damage the probe end, shave off the remaining material so that the element is flush.

4.4.14 Electronics

4.4.14.1 Change of Supply (Mains) Voltage (See Dwgs. 50.505.000.010 and .010.020)

The analyzer can operate from 115/230V, 60Hz supply voltage, but this must be set in <u>two</u> locations inside the electronics enclosure. These locations are a selector switch on the power supply board and the <u>two</u> jumpers on the motor board. Also, the power supply board requires a different fuse rating for each operating voltage. See paragraph 4.4.14.4, Fuse Replacement.

<u>CAUTION</u>: Before starting operation of the analyzer, verify that the voltage selectors are set properly and the power supply fuse is the correct rating for the operating voltage provided. Operation with the selectors improperly set may damage the equipment.

WARNING: TO AVOID POSSIBLE SEVERE PERSONAL INJURY OR DAMAGE TO THE EQUIPMENT, THIS EQUIPMENT SHOULD BE INSTALLED, OPERATED, AND SERVICED ONLY BY PERSONNEL WHO ARE THOROUGHLY FAMILIAR WITH THE CONTENTS OF THE INSTRUCTION BOOK PROVIDED.

TO AVOID POSSIBLE SEVERE PERSONAL INJURY FROM ELECTRICAL SHOCK, DISCONNECT ALL SOURCES OF POWER BEFORE SERVICING. IN ADDITION TO POWER REQUIRED TO OPERATE THIS UNIT, UNPOWERED RELAY CONTACT CONNECTIONS ARE PROVIDED TO WHICH ADDITIONAL, INDEPENDENT SOURCES OF POWER MAY BE WIRED.

WHEN SERVICE MAY BE REQUIRED TO BE PERFORMED TO THE UNIT WITH POWER CONNECTED, IT SHOULD ONLY BE PERFORMED BY PERSONNEL QUALIFIED TO PERFORM SUCH SERVICE.

4.4.14.2 Cell Voltage Adjustment (See Dwg. 50.505.010.020)

WARNING: TO AVOID POSSIBLE SEVERE PERSONAL INJURY, ELECTRICAL SHOCK OR DAMAGE TO EQUIPMENT, AVOID CONTACTING CIRCUIT BOARD COMPONENTS WHILE MAKING ADJUSTMENTS.

A fine, flat-bladed screwdriver is required to make this circuit adjustment.

With the unit operating, open the door to the electronics enclosure and locate the cell voltage adjustment potentiometer on the CPU board (next to the range selection switches). Turn the potentiometer and view the cell voltage on the display of the analyzer until the voltage is set to the desired value.

4.4.14.3 Setting Range Switches (See Dwg. 50.505.010.020)

WARNING: TO AVOID POSSIBLE SEVERE PERSONAL INJURY, EQUIPMENT DAMAGE, OR ELECTRICAL SHOCK TURN OFF POWER BEFORE SERVICING.

The analyzer requires correct setting of range switches. Input the stage gain selection switches for proper operation. The correct switch position is dependent on the range to which the analyzer is set to operate within the software.

POWER REQUIREMENTS: 115/230 VAC, 50/60 HZ
THE UNIT IS PROTECTED BY INTERNAL FUSES:
POWER SUPPLY BOARD
.2A(115V)/.1A(230V),250V,FAST ACTING, 5 x 20MM
MOTOR ADAPTER BOARD
.25A,250V,TIME DELAY, 1/4 x 1-1/4 IN

GAIN SWITCHES
(INPUT/CPU BOARD)

RANGE		SW POS			
MICRO	DEOX	1	2	3	4
0.1		0	0	0	0
0.2		0	1	0	0
0.5		1	1	0	0
1	0.5	0	0	0	1
2	1	0	1	0	1
5	2.5	1	1	0	1
10	5	0	0	1	1
20	10	0	1	1	1
50		1	1	1	1

(O = OPEN, 1 = CLOSED)

JUMPERS (PS BOARD):
JP1 - DIG INPUT
1-2 230V AC/DC
1-3 115V AC/DC
1-4 24V AC/DC
SNUBBER JUMPERS
(REMOVE TO DISABLE)

JP2	-	RELAY "A" (NC)
JP3	-	RELAY "A" (NO)
JP4	-	RELAY "B" (NC)
JP5	-	RELAY "B" (NO)
JP6	-	RELAY "C" (NC)
JP7	-	RELAY "C" (NO)
JP8	-	WETSIDE CTRL

PROBE WIRING

	CONN.	WIRE	CPU BD (j3)
WRK	1	W	1
REF	2	BK	3
CTR	3	R	2
TEMP	4	BR	4
TEMP	5	G	5
SHIELD	6	-	6

Disconnect power to the analyzer before opening the electronics enclosure to set the range switches. When setting range switches, the up position is "open" and down position is "closed".

4.4.14.4 Fuse Replacement (See Dwgs. 50.505.000.010 and 50.505.010.020)

WARNING: TO AVOID POSSIBLE SEVERE PERSONAL INJURY, EQUIPMENT DAMAGE, OR ELECTRICAL SHOCK TURN OFF POWER BEFORE SERVICING.

Disconnect power to the analyzer before opening the electronics enclosure to replace a fuse.

The Power Supply board is located at the top of the electronics enclosure door. The Power Supply board fuse is located at the top left corner of the board (with the door open).

The Motor Adapter board is located in the left side of the electronics enclosure. The Motor Adapter board fuse is located at the bottom of the motor adapter board.

See Section 1 - Technical Data for fuse ratings.

4.4.14.5 Circuit Boards Removal and Replacement (see Dwgs. 50.505.000.010 and .010.020)

WARNING: TO AVOID POSSIBLE SEVERE PERSONAL INJURY OR DAMAGE TO THE EQUIPMENT, THIS EQUIPMENT SHOULD BE INSTALLED, OPERATED, AND SERVICED ONLY BY PERSONNEL WHO ARE THOROUGHLY FAMILIAR WITH THE CONTENTS OF THE INSTRUCTION BOOK PROVIDED.

TO AVOID POSSIBLE SEVERE PERSONAL INJURY FROM ELECTRICAL SHOCK, DISCONNECT ALL SOURCES OF POWER BEFORE SERVICING. IN ADDITION TO POWER REQUIRED TO OPERATE THIS UNIT, UNPOWERED RELAY CONTACT CONNECTIONS ARE PROVIDED TO WHICH ADDITIONAL, INDEPENDENT SOURCES OF POWER MAY BE WIRED.

WHEN SERVICE MAY BE REQUIRED TO BE PERFORMED TO THE UNIT WITH POWER CONNECTED, IT SHOULD BE PERFORMED ONLY BY PERSONNEL QUALIFIED TO PERFORM SUCH SERVICE.

- Motor Board

  a. Disconnect all sources of power to the analyzer.

  b. Disconnect the pump and impeller motors from where they connect to the bulkhead connectors on the right hand side of the wetside enclosure.

  c. Remove the screws that attach the bulkhead connectors (two per connector with nuts) to the panel between the electronics and wet-sides.

  d. Remove the bulkhead connectors with the gaskets from the electronics side of the panel.

e. Disconnect the power leads to the motor board from the terminal strip on the wiring panel. Disconnect the ground lead attached to the panel.

f. Pull the leads out from the panel through the holes with grommets.

g. Remove the motor board from the plastic snap-on standoffs on the wiring panel. To do this, pinch the head of each standoff, while pulling gently on the board. Pull one standoff at a time.

WARNING: ALWAYS RECONNECT THE GROUNDING LEADS WHEN REMOVED OR BROKEN. GROUNDING LEADS ARE PROVIDED FOR SAFETY, TO PREVENT INJURY FROM ELECTRICAL SHOCK.

Replacement of the motor board is the reverse sequence of removal. Reattach all grounding leads.

- Power Supply Board

CAUTION: Replace the (4) plastic standoffs that attach the power supply board to its mounting panel, as they will likely be damaged during removal of the board.

a. Disconnect all sources of power to the analyzer before opening the door to the electronics enclosure.

b. Disconnect the ribbon cable from the power supply board, where it connects to the CPU board.

c. Disconnect the terminal block plug on the left-hand end of the board. It fits tightly, so rock it out one end at a time. Do not pry it out with a tool, as this will damage the connector.

d. Remove the four screws and lockwashers attaching the panel (behind the power supply board) to the keypad backing plate.

e. Turn the panel/power supply board over and remove the three screws attaching the panel to the circuit board (into the transformer).

f. Detach the power supply board by pinching each of the heads of the standoffs (one at a time) and pulling apart the circuit board and panel.

Replacement is the reverse of removal.

Be sure to reinstall the serrated lockwashers with the screws attaching the panel behind the Power Supply board to the keypad backing plate. The panel is grounded through these screws and the serrated lockwashers ensure a sound electrical connection.

- CPU Board

  a. Disconnect all sources of power to the analyzer before opening the electronics door for access to the electronics.

  b. Disconnect the ribbon cables from the power supply board and display board where they attach to the CPU board.

  c. Disconnect the terminal block/plug on the left-hand end of the board. It fits tight, so rock it out one end at a time. Do not pry it out with a tool, as this will damage the connectors.

  d. Remove the four screws and lockwashers attaching the CPU board to the keypad backing plate. Remove the CPU board with the plastic insulating panel behind it.

  Replacement is the reverse of removal. Be sure to replace the insulating board behind the CPU board. This insulating board is needed to prevent the sharp leads on the back of the board from cutting into the wiring harness.

  Check that the gain switches and the cell voltage are correct. See paragraphs 4.4.14.2, Cell Voltage Adjustment, and 4.4.14.3, Setting Range Switches.

- Display Board

  a. Disconnect all sources of power before opening the electronics enclosure door for access to the electronics.

  b. Remove the power supply and CPU boards.

  c. Remove the three screws attaching the display board and remove the display board from the keypad backing plate.

  d. Remove extender cable from display board cable. Note the orientation of the connection to display board cable for reassembly.

Replacement is the reverse of removal. Be sure to reinstall the insulating washers under the screw heads of the screws that attach the display board to the backing plate. These washers prevent the screw heads from shorting to the conductors on the display board. Note the red (color-coded) conductor on the display board ribbon cable. This conductor should mate with the red conductor on the extender cable, which is keyed to Pin 1 on the CPU board.

4.4.14.6 Snubber Jumpers

As discussed in the Section 2 - Installation, the relay output contacts are provided with snubbers. These electrical components extend the life of the contacts when they are providing power to an inductive load (e.g., a solenoid valve or electrical alarm). However, snubbers can cause improper operation of the output functions if the relay outputs are used to drive low-power, solid-state devices. The leakage current through the snubber may be enough to interfere with the proper actuation/de-actuation of the driven device. The jumpers can be selectively disabled by removing the associated jumper.

4.4.14.7 Identification, Removal, and Replacement of Relays

WARNING: TO AVOID POSSIBLE SEVERE PERSONAL INJURY OR DAMAGE TO THE EQUIPMENT, THIS EQUIPMENT SHOULD BE INSTALLED, OPERATED, AND SERVICED ONLY BY PERSONNEL WHO ARE THOROUGHLY FAMILIAR WITH THE CONTENTS OF THE INSTRUCTION BOOK PROVIDED.

TO AVOID POSSIBLE SEVERE PERSONAL INJURY FROM ELECTRICAL SHOCK, DISCONNECT ALL SOURCES OF POWER BEFORE SERVICING. IN ADDITION TO POWER REQUIRED TO OPERATE THIS UNIT, UNPOWERED RELAY CONTACT CONNECTIONS ARE PROVIDED TO WHICH ADDITIONAL, INDEPENDENT SOURCES OF POWER MAY BE WIRED.

WHEN SERVICE MAY BE REQUIRED TO BE PERFORMED TO THE UNIT WITH POWER CONNECTED, IT SHOULD BE PERFORMED ONLY BY PERSONNEL QUALIFIED TO PERFORM SUCH SERVICE.

There are four relays plugged into sockets on the power supply board, labeled K1 through K4. The relays are referred to elsewhere in this manual as: K1 = Relay "A", K2 = Relay "B", K3 = Relay "C", and K4 = The Wetside Control Relay. The relay outputs ("A", "B", and "C") can be

tested through the software, before opening the electronic side for service. In the test group of functions, the Wetside Control Relay (Relay "D") can be tested through the "Sleep Mode" function in the Diagnostic Functions Group.

WARNING LABELS AND TAGS

The following warning labels and tags are attached to the equipment.

P60792: TO AVOID POSSIBLE SEVERE PERSONAL INJURY FROM ELECTRICAL SHOCK, TURN POWER OFF BEFORE SERVICING.

THIS EQUIPMENT MAY HANDLE HAZARDOUS MATERIALS SUCH AS ACID OR CAUSTIC WHICH CAN CAUSE SEVERE BURN TYPE INJURIES. WHEN HANDLING ANY HAZARDOUS MATERIAL:

USE EXTREME CARE TO AVOID CONTACT WITH THE MATERIAL AND POSSIBLE PERSONAL INJURY.

USE EYE PROTECTION AND APPROPRIATE PROTECTIVE CLOTHING.

REFER TO THE SAFETY PRECAUTIONS OF THE MANUFACTURER OF THE HAZARDOUS MATERIAL AND THE EQUIPMENT INSTRUCTION BOOK FOR FURTHER IMPORTANT DETAILS AND PRECAUTIONS.

TO PREVENT POSSIBLE SEVERE PERSONAL INJURY OR DAMAGE TO THE EQUIPMENT, THIS EQUIPMENT SHOULD BE INSTALLED, OPERATED AND SERVICED ONLY BY TRAINED QUALIFIED PERSONNEL WHO ARE THOROUGHLY FAMILIAR WITH THE ENTIRE CONTENTS OF THE INSTRUCTION BOOK PROVIDED.

WARNING LABELS AND TAGS (CONT'D)

P60794: TO AVOID POSSIBLE SEVERE PERSONAL INJURY OR DAMAGE TO THE EQUIPMENT, THIS EQUIPMENT SHOULD BE INSTALLED, OPERATED AND SERVICED ONLY BY PERSONNEL WHO ARE THOROUGHLY FAMILIAR WITH THE CONTENTS OF THE INSTRUCTION BOOK PROVIDED.

TO AVOID POSSIBLE SEVERE PERSONAL INJURY FROM ELECTRICAL SHOCK, DISCONNECT ALL SOURCES OF POWER BEFORE SERVICING. IN ADDITION TO POWER REQUIRED TO OPERATE THIS UNIT, UNPOWERED RELAY CONTACT CONNECTIONS ARE PROVIDED TO WHICH ADDITIONAL, INDEPENDENT SOURCES OF POWER MAY BE WIRED.

WHEN SERVICE MAY BE REQUIRED TO BE PERFORMED TO THE UNIT WITH POWER CONNECTED, IT SHOULD ONLY BE PERFORMED BY PERSONNEL QUALIFIED TO PERFORM SUCH SERVICE.

CAUTION LABEL

The following caution label is attached to the equipment.

L3259: TO PREVENT DAMAGE TO MODULE, REPLACE SHIMS UNDERNEATH MODULE AFTER PLYWOOD FEET ARE REMOVED.

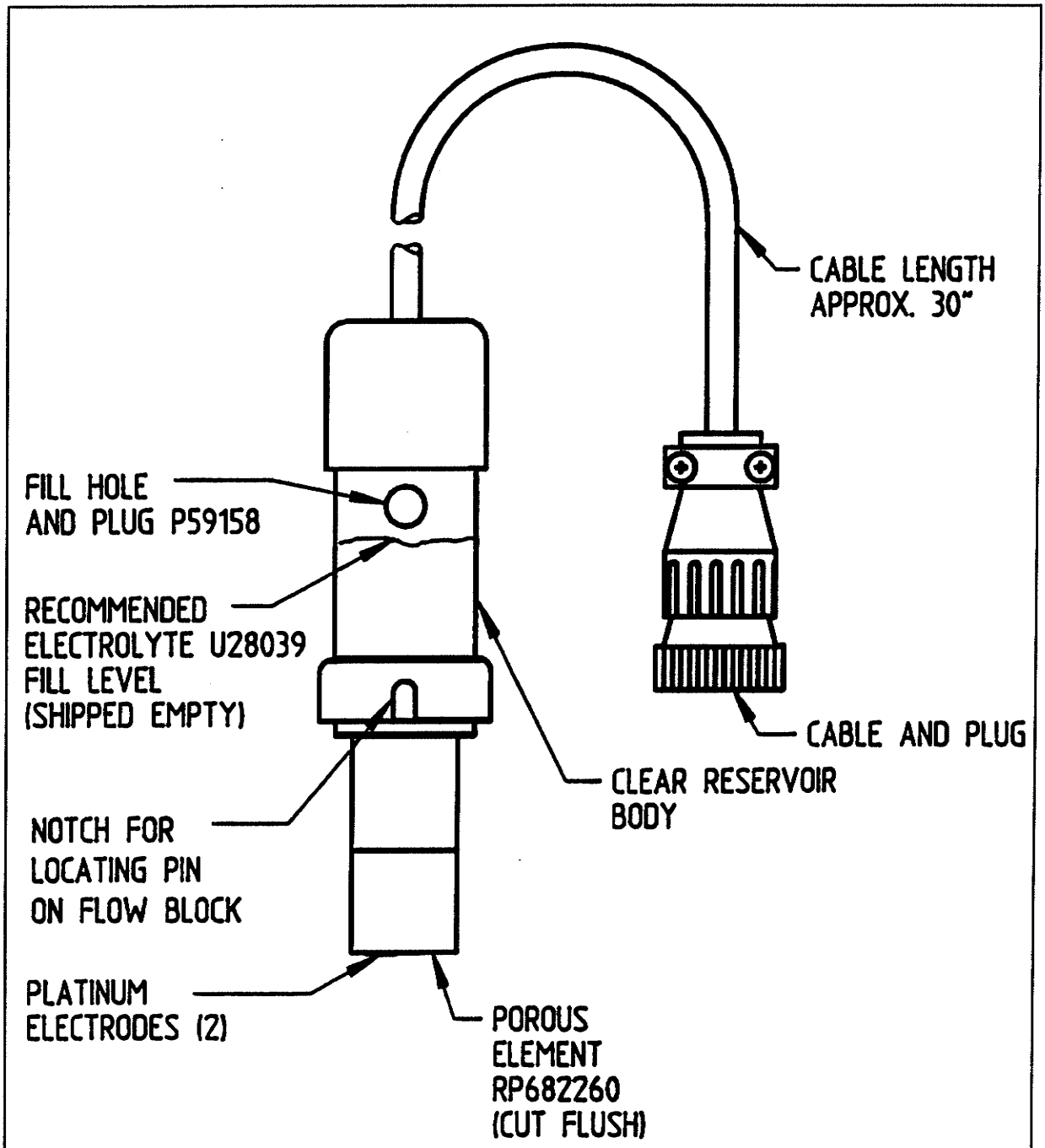

WHEN ORDERING MATERIAL ALWAYS SPECIFY MODEL AND SERIAL NUMBER OF APPARATUS.

U29086 PROBE - SERVICE

50.510.150.010

ISSUE 1 2-98

SECTION 5 - ILLUSTRATIONS

List Of Contents

	DRAWING NO.
Parts	
AAA8849 Basic Analyzer	50.505.000.010A-G
Panel Unit	50.505.010.010A-C
AAA8963 Electronic Door Unit	50.505.010.020A&B
Modular Cabinet	50.500.002.011A&B
Reagents	50.505.020.010
Modular Enclosure	25.055.004.010A&B
Junction Enclosure	50.505.020.020A&B

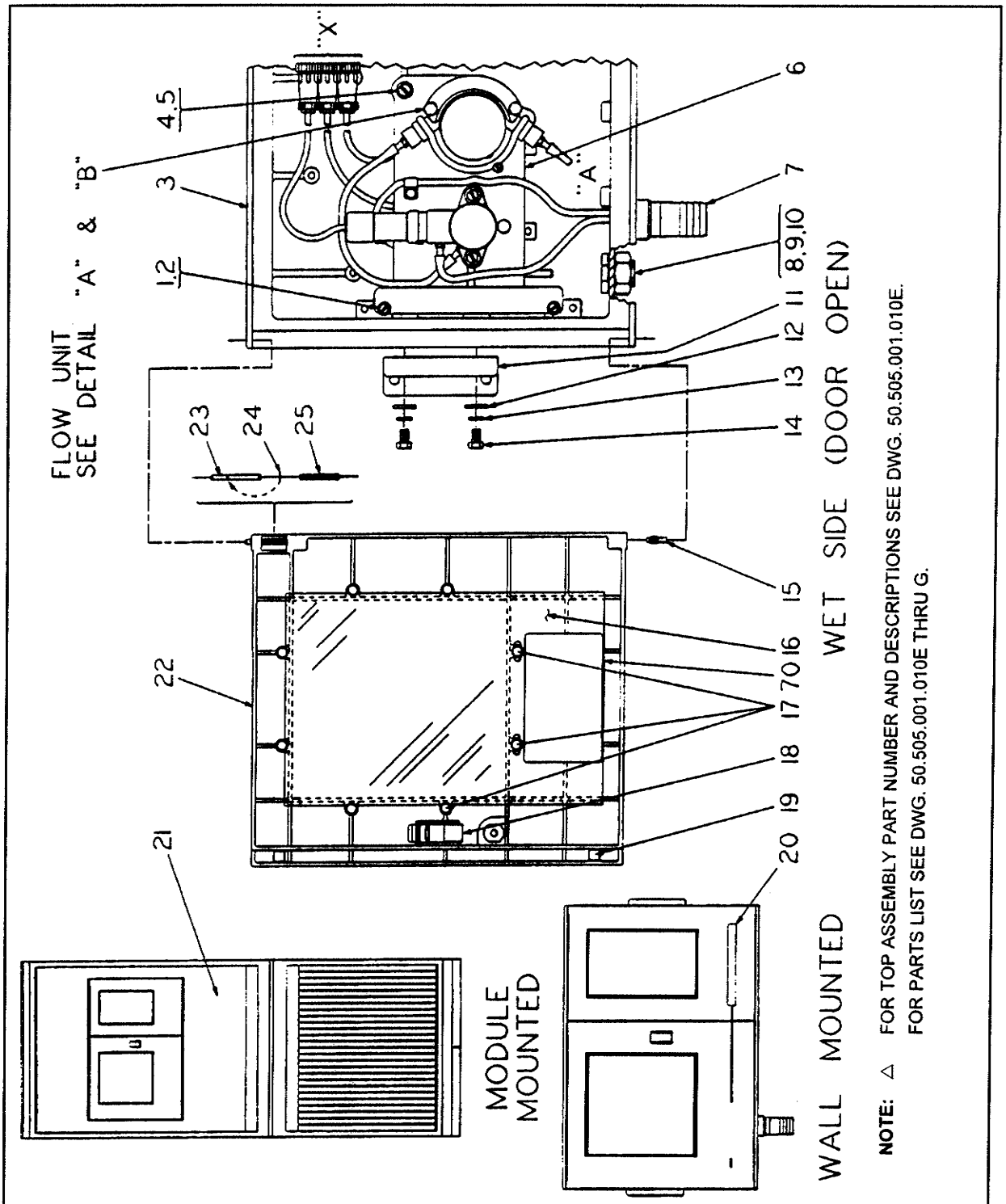

BASIC ANALYZER - PARTS
AAA8849 Common Parts

50.505.001.010A
ISSUE 1 2-98

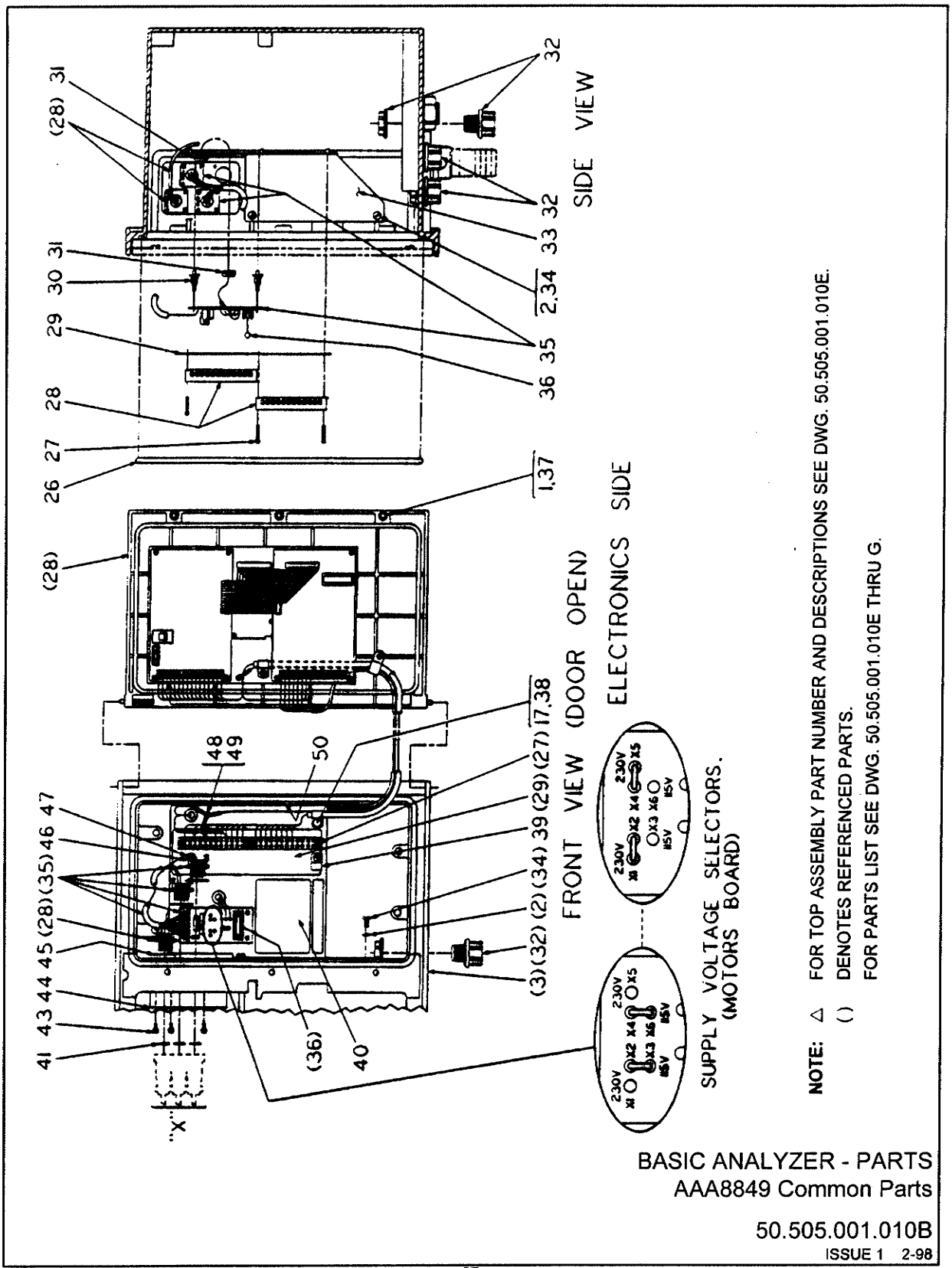

BASIC ANALYZER - PARTS
AAA8849 Common Parts

50.505.001.010B
ISSUE 1 2-98

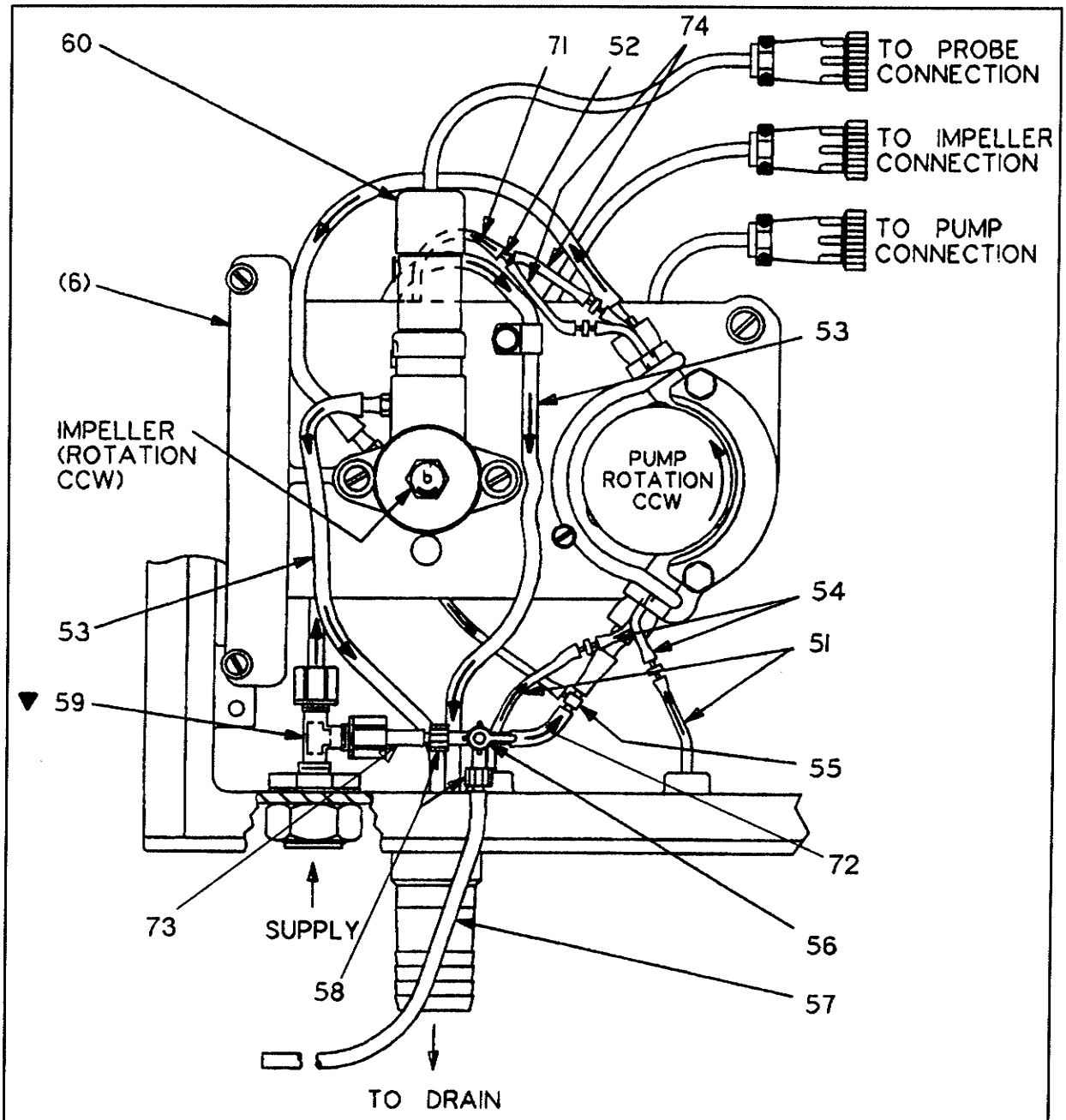

DEOX/2000 AND MICRO/2000 ARRANGEMENT

NOTE: ▲ FOR TOP ASSEMBLY PART NUMBER AND DESCRIPTIONS SEE DWG. 50.505.001.010E.
▼ USE TFE TAPE ON PIPE THREADS.
( ) DENOTES REFERENCED PARTS.
FOR PARTS LIST SEE DWG. 50.505.001.010E THRU G.

BASIC ANALYZER - PARTS
AAA8849 Common Parts

50.505.001.010C
ISSUE 2 7-02

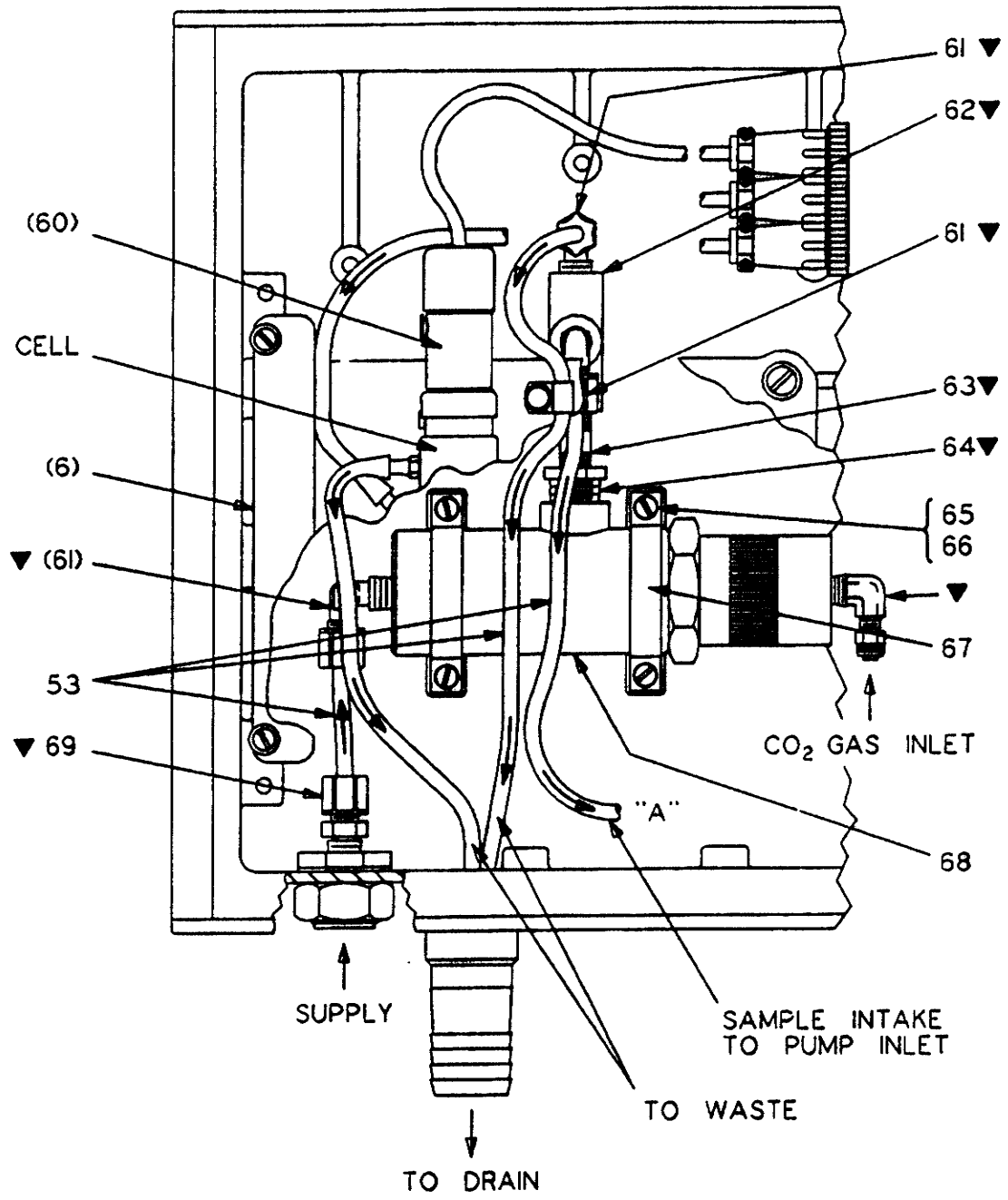

NOTE: ▲ FOR TOP ASSEMBLY PART NUMBER AND DESCRIPTIONS SEE DWG. 50.505.001.010E.

▼ USE TFE TAPE ON PIPE THREADS.

( ) DENOTES REFERENCED PARTS.
FOR PARTS LIST SEE DWG. 50.505.001.010E THRU G.

BASIC ANALYZER - PARTS
AAA8849 Common Parts

50.505.001.010D
ISSUE 1 2-98

DEOX/2000 ANALYZER	
AAA9005	MONITOR, WALL MOUNTED
AAA9008	CONTROL, WALL MOUNTED
AAA8933	MONITOR, MODULE MOUNTED
AAA8930	CONTROL, MODULE MOUNTED

MICRO/2000 ANALYZER	
AAA8918	MONITOR, WALL MOUNTED, NON-REAGENT
AAA8915	CONTROL, WALL MOUNTED, NON-REAGENT
AAA8906	MONITOR, WALL MOUNTED, ONE-REAGENT
AAA8903	CONTROL, WALL MOUNTED, ONE-REAGENT
AAA8900	MONITOR, WALL MOUNTED, TWO-REAGENT
AAA8897	CONTROL, WALL MOUNTED, TWO-REAGENT
AAA8840	MONITOR, MODULE MOUNTED, NON-REAGENT
AAA8837	CONTROL, MODULE MOUNTED, NON-REAGENT
AAA8828	MONITOR, MODULE MOUNTED, ONE-REAGENT
AAA8825	CONTROL, MODULE MOUNTED, ONE-REAGENT
AAA8822	MONITOR, MODULE MOUNTED, TWO-REAGENT
AAA8819	CONTROL, MODULE MOUNTED, TWO-REAGENT

MICRO/2000 ANALYZER WITH CARBON DIOXIDE	
AAA8912	MONITOR, WALL MOUNTED,
AAA8909	CONTROL, WALL MOUNTED,
AAA8894	MONITOR, WALL MOUNTED, ONE-REAGENT
AAA8891	CONTROL, WALL MOUNTED, ONE-REAGENT
AAA8834	MONITOR, MODULE MOUNTED,
AAA8831	CONTROL, MODULE MOUNTED,
AAA8843	MONITOR, MODULE MOUNTED, ONE-REAGENT
AAA8816	CONTROL, MODULE MOUNTED, ONE-REAGENT

WHEN ORDERING MATERIAL ALWAYS SPECIFY MODEL AND SERIAL NUMBER OF APPARATUS.

BASIC ANALYZER - PARTS LIST
AAA8849 Common Parts

50.505.001.010E
ISSUE 1 2-98

KEY NO.	PART NO.	QTY.	DESCRIPTION
◆ 1	P 19665	5	MACH. SCREW (RD. HD., SS) #10-32X5/8" LG.
◆ 2	P 45188	4	#10 LOCKWASHER (SS)
◆ 3	AAA7385	1	ENCLOSURE
◆ 4	P 29693	1	MACH. SCREW (RD. HD., SS) 1/4-20X1/2" LG.
◆ 5	P 14635	1	1/4" LOCKWASHER (SS)
* 6	UXA29380	1	PANEL UNIT (1RPM), (SEE DWG. 50.505.010.010A&B)
	OR		
	UXB29380	1	PANEL UNIT (2RPM), (SEE DWG. 50.505.010.010A&B)
◆ 7	P 58270	1	DRAIN FITTING
◆ 8	P 54550	1	BULKHEAD FITTING
◆ 9	P 45385	1	GASKET
◆ 10	P 47065	1	NUT (PVC) 3/4"
◆ 11	P 58145	2	BRACKET
◆ 12	P 22616	4	5/16" WASHER (SS)
◆ 13	P 43049	4	5/16" LOCKWASHER (SS)
◆ 14	P 32755	4	BOLT (HEX. HD., SS) 5/16"-18X1/2" LG.
◆ 15	P 58137	1	GROOV-PIN
◆ 16	U 29531	1	WINDOW UNIT
◆ 17	P 57595	10	PUSH-ON CLIP
◆ 18	U 27934	1	LATCH
◆ 19	P 57548	2	FOAM BUMPER
* 20	P 60546	1	NAMEPLATE LABEL (DEOX)
	OR		
	P 60547	1	NAMEPLATE LABEL (MICRO)
21	AAA7394	1	FRONT PANEL (WITHOUT RECORDER)
	OR		
	AAA7391	1	FRONT PANEL (WITH CIRCULAR CHART RECORDER)
	OR		
	AAA8741	1	FRONT PANEL (WITH STRIP CHART RECORDER)
◆ 22	AAA7376	1	WET SIDE DOOR
◆ 23	P 58139	1	PIN
◆ 24	P 40867	1	RETAINING RING
◆ 25	P 58138	1	SPRING
◆ 26	RK31 2260	4FT.	RUBBER ROD, 1/4" DIA.
◆ 27	P 27292	3	MACH. SCREW (FIL. HD., SS) #4-40X3/4" LG.
◆ 28	AAA8963	1	ELECTRONIC DOOR UNIT (SEE DWG. 50.505.010.020A)
◆ 29	P 60584	1	TERMINAL MARKER LABEL
◆ 30	P 59080	4	CIRCUIT BOARD SUPPORT
◆ 31	P 8430	2	GROMMET
◆ 32	U 24505	3	1/2" CONNECTOR
◆ 33	U 29400	1	WIRING BRACKET
◆ 34	P 56799	3	MACH. SCREW (PAN HD., SS) #10-32X3/8" LG.
◆ 35	U 29376	1	BOARD & CABLE

NOTE: ◆ PART OF AAA8849. * PART OF BASIC ANALYZER.

WHEN ORDERING MATERIAL ALWAYS SPECIFY MODEL AND SERIAL NUMBER OF APPARATUS.

BASIC ANALYZER - PARTS LIST
AAA8849 Common Parts

50.505.001.010F
ISSUE 1 2-98

KEY NO.	PART NO.	QTY.	DESCRIPTION
36	U 13434	1	TIME DELAY FUSE, 250mA, 250V (PART OF KEY NO. 35)
◆ 37	P 45336	3	O-RING
◆ 38	P 41970	2	CLAMP (NYLON) 5/16" ID
◆ 39	P 22644	1	CLAMP (NYLON) 1/2" ID
◆ 40	P 60794	1	WARNING LABEL
◆ 41	P 58189	3	RECEPTACLE SEAL
◆ 43	P 58258	6	SEAL SCREW, #4-40 x 3/8" LG.
◆ 44	P 60418	1	CONNECTION LOCATION LABEL
◆ 45	P 58259	3	GASKET
◆ 46	P 15362	6	#4 LOCKWASHER (SS)
◆ 47	P 56615	6	HEX. NUT (SS) #4-40
◆ 48	P 19841	1	MACH. SCREW (RD. HD.,SS) #6-32 x 1/2" LG.
◆ 49	P 43816	1	#6 SHAKEPROOF WASHER (SS)
◆ 50	P 60793	1	INFORMATION LABEL
51	RK63 4411	8 FT.	TUBING (WHITE NORP.) .020" ID x 1/16" OD
● 52	P 60420	1	"Y" TUBE FITTING
53	RP684448	3.5	TUBING (PE) 3/16" ID x 1/4" OD
54	U 29399	1	REAGENT TUBE UNIT (EACH REAGENT)
● 55	P 60424	1	TEE TUBE FITTING
● 56	U 29402	1	CALIBRATION VALVE (DEOX ONLY)
● 57	RK63 4442	3 FT.	TUBING (NORP.) 1/8"ID x 1/4" OD
● 58	P 60534	2	MALE FITTING (LUER)
○● 59	U 29401	1	MALE RUN TEE (1/4" NPT)
◆ 60	U 29086	1	PROBE
■ 61	U 28046	3	ELBOW TUBING CONNECTOR, 1/4" NPT x 1/4" OD
■ 62	P 38216	1	TEE (PVC) 1/4" NPT
■ 63	P 35518	1	NIPPLE (PVC) 1/4" NPT x 1-1/2" LG.
■ 64	P 35108	1	REDUCING BUSHING (PVC) 1/2" NPT x 1/4" NPT
□ 65	P 56799	4	MACH. SCREW (SS) 10-32 X 3/8" LG.
□ 66	P 45188	4	#10 LOCKWASHER (SS)
□ 67	P 58128	2	DIFFUSOR MOUNTING STRAP
□ 68	U 26965	1	CO_2 DIFFUSOR
■ 69	U 28045	1	TUBING CONNECTOR, 1/4" NPT x 1/4" OD
70	P 60792	1	WARNING LABEL
71	● RK63 4411	8 FT.	TUBING (WHITE NORP.) .020" ID x 1/16" OD (DEOX ONLY)
	OR		
	RK63 4411	1 FT.	TUBING (WHITEN NORP.) .020" ID x 1/16" OD (MICRO ONLY)
72	RK63 4442	2 IN.	TUBING (NORP.) 1/8"ID x 1/4" OD
73	RK63 4442	6 IN.	TUBING (NORP.) 1/8"ID x 1/4" OD
74	RK63 4411	2 IN.	TUBING (WHITEN NORP.) .020" ID x 1/16" OD

NOTE: ◆ PART OF AAA8849. ● PART OF AAA8827. ■ PART OF AAA9002.
□ PART OF AAA8825. ○ PART OF AAA8846.

WHEN ORDERING MATERIAL ALWAYS SPECIFY MODEL AND SERIAL NUMBER OF APPARATUS.

BASIC ANALYZER - PARTS LIST
AAA8849 Common Parts

50.505.001.010G
ISSUE 2 7-02

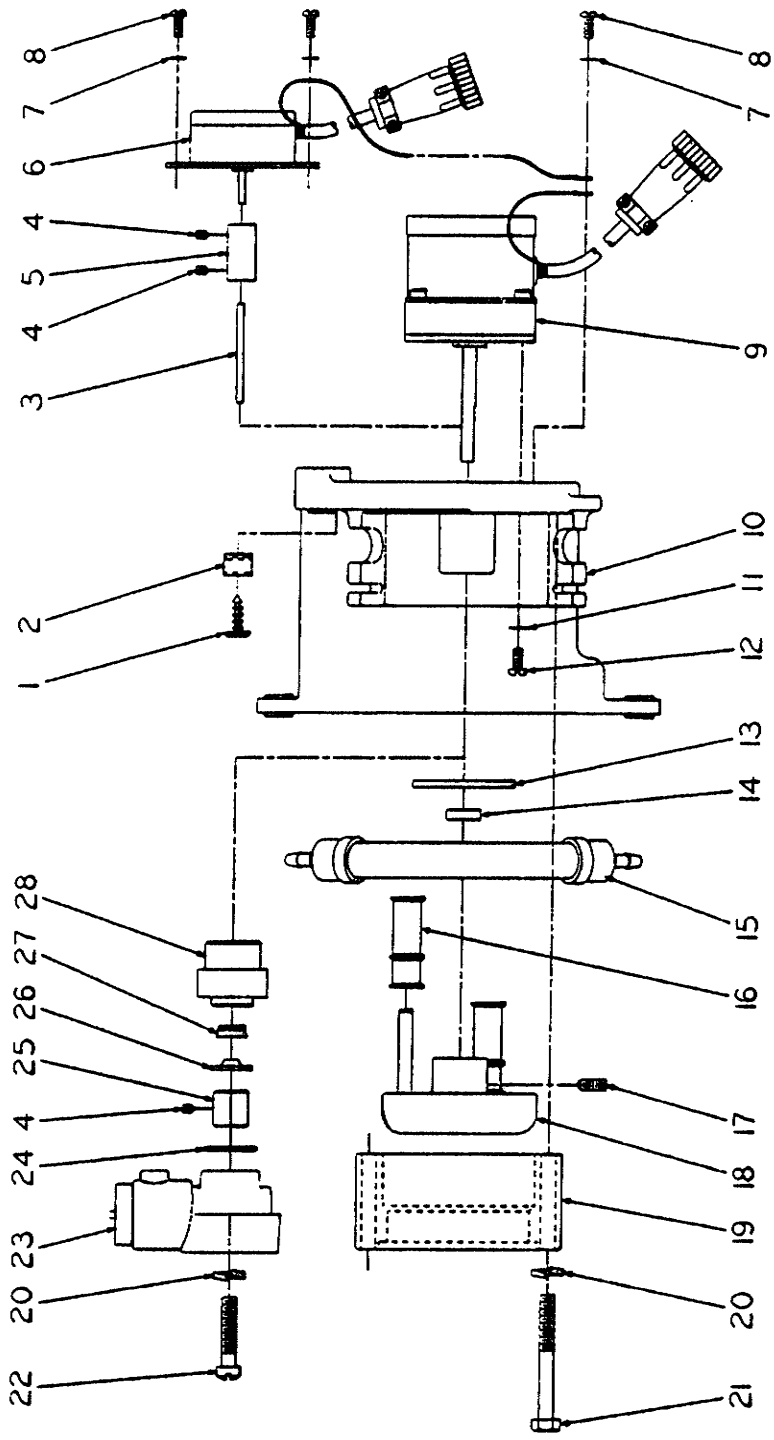

NOTE: FOR PARTS LIST SEE DWG. 50.505.010.010C.

UXA 29380 - 1 RPM MOTOR; UXB 29380 - 2 RPM MOTOR
PANEL UNIT - PARTS

50.505.010.010A
ISSUE 1 2-98

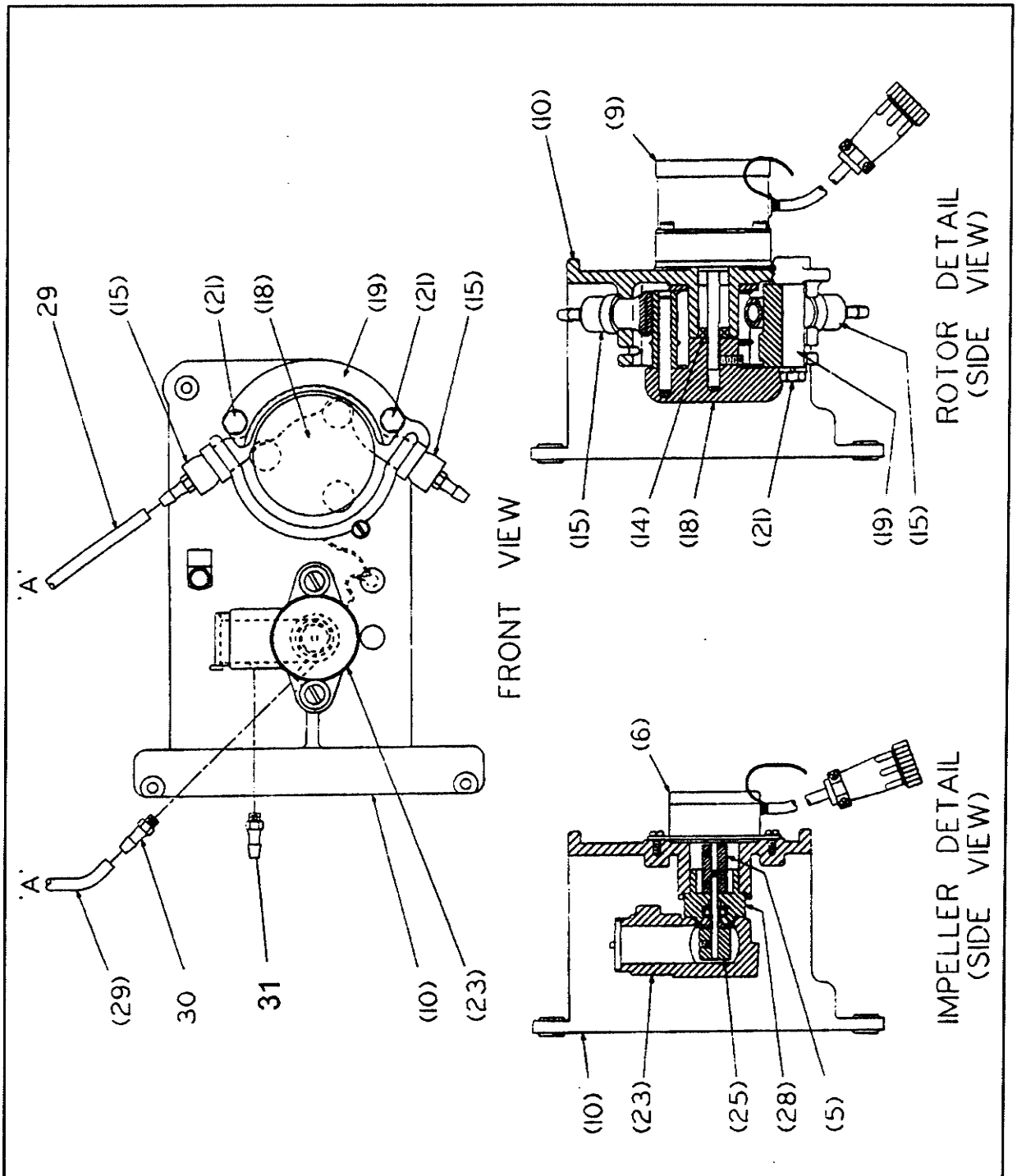

NOTE: ( ) INDICATES A REFERENCE PART.
FOR PARTS LIST SEE DWG. 50.505.010.010C.

UXA 29380 - 1 RPM MOTOR; UXB 29380 - 2 RPM MOTOR
PANEL UNIT - PARTS

50.505.010.010B
ISSUE 2 6-02

KEY NO.	PART NO.	QTY.	DESCRIPTION
1	P 57595	1	CLIP
2	P 40282	1	CLAMP
3	P 60414	1	IMPELLER SHAFT
4	P 34673	3	SET SCREW (SS) 6-32 x 3/16" LG.
5	P 60346	1	COUPLING
6	U 29410	1	MOTOR
7	P 43816	3	#6 WASHER (SS)
8	P 46999	3	SCREW (P.HD., SS) 6-32 x 5/16" LG.
9	UXA29379	1	MOTOR, 1 RPM
	OR		
	UXB29379	1	MOTOR, 2 RPM
10	P 60384	1	FRAME CASTING
11	P 43747	2	#8 WASHER (SS)
12	FP 2431	2	SCREW (P. HD., SS) 8-32 x 1/2" LG.
13	P 60411	1	THRUST WASHER
14	U 29403	1	BALL BEARING, 1/4" ID x 5/8" OD
15	U 29398	1	SAMPLE TUBE UNIT
16	P 60412	3	PUMP ROLLER
17	P 60552	1	SET SCREW (SS) 10-24 x 1/2" LG.
18	U 29378	1	ROTOR BODY UNIT
19	P 60410	1	OCCLUSION RING
20	P 14635	4	1/4" LOCKWASHER (SS)
21	P 12143	2	SCREW 1/4-20 x 2-1/4" LG.
22	P 43216	2	SCREW (F.HD.,SS) 1/4-20 x 1-1/4" LG.
23	P 60417	1	CELL
24	PXE 51161	1	O-RING (018) EPR
25	P 60415	1	IMPELLER
26	P 60210	1	SEAL, GRIT
27	P 60207	1	U-CUP (TEFLON)
28	P 60409	1	ADAPTER SEAL
29	RK63 4442	.670 FT.	TUBING, 1/8" ID x 1/4" OD (NORPRENE)
30	P 60419	1	TUBE FITTING 1/8T x 10-32
31	AAA3894	1	TUBE FITTING 3/16 T x 1/4-28

WHEN ORDERING MATERIAL ALWAYS SPECIFY MODEL AND SERIAL NUMBER OF APPARATUS.

UXA 29380 - 1 RPM MOTOR; UXB 29380 - 2 RPM MOTOR
PANEL UNIT - PARTS LIST

50.505.010.010C
ISSUE 2 7-02

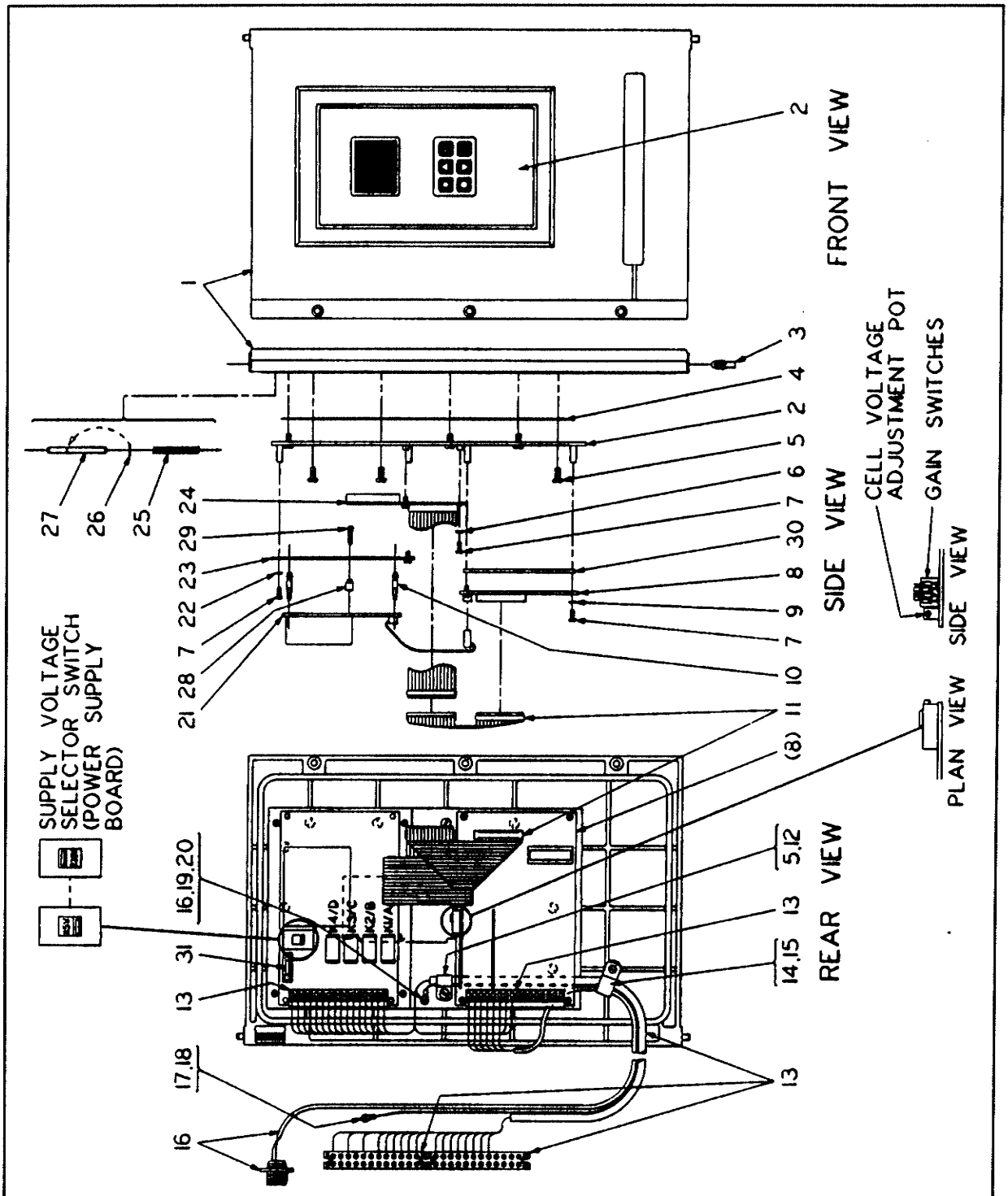

NOTE: FOR PARTS LIST SEE DWG. 50.505.010.020B.

AAA8963 ELECTRONIC DOOR UNIT - PARTS

50.505.010.020A

ISSUE 1 2-98

KEY NO.	PART NO.	QTY.	DESCRIPTION
1	AAA7379	1	ELECTRONIC DOOR
2	U29406	1	DISPLAY PANEL
3	P58137	1	GROOV PIN
4	P58129	1	GASKET
5	PC51130	14	MACH. SCREW (PAN HD.,SS) #8-32 x 3/8" LG.
6	P56608	3	WASHER (NYLON)
7	P46650	11	MACH. SCREW (PAN HD.,SS) #4-40 x 5/16" LG.
8	U29423	1	CPU PRINTED CIRCUIT BOARD UNIT
9	P15362	4	#4 WASHER (SS)
10	P60753	4	STANDOFF (NYLON)
11	U29436	1	RIBBON CABLE
12	P41970	1	CLAMP, 5/16
13	U29414	1	WIRING HARNESS
14	P22644	1	CABLE CLAMP
15	FP2431	1	MACH. SCREW, 8-32 x 5/8" LG.
16	U29377	1	PROBE CABLE UNIT
17	P31220	3 FT.	16GA. WIRE (STRANDED)
18	P36635	2	#6 LUG
19	P19841	1	MACH. SCREW, 6-32 x 1/2" LG.
20	P43816	1	#6 LOCKWASHER
21	UXF96146	1	POWER SUPPLY PRINTED CIRCUIT BOARD UNIT
22	P45194	1	#4 WASHER (SS)
23	P60754	4	SUPPORT PANEL
24	U96345	1	LCD MODULE
25	P58138	1	SPRING
26	P40867	1	RETAINING RING
27	P58139	1	PIN
28		3	SPACER (NYLON)
29		3	#4 SCREW (RD. HD.) SELF-THREADING
30		1	BOARD COVER
31	UXG92568	1	FUSE, 200mA (115)
	OR		
	UXD92568	1	FUSE, 100mA (230)

WHEN ORDERING MATERIAL ALWAYS SPECIFY MODEL AND SERIAL NUMBER OF APPARATUS.

AAA8963 ELECTRONIC DOOR UNIT - PARTS LIST

50.505.010.020B

ISSUE 1 2-98

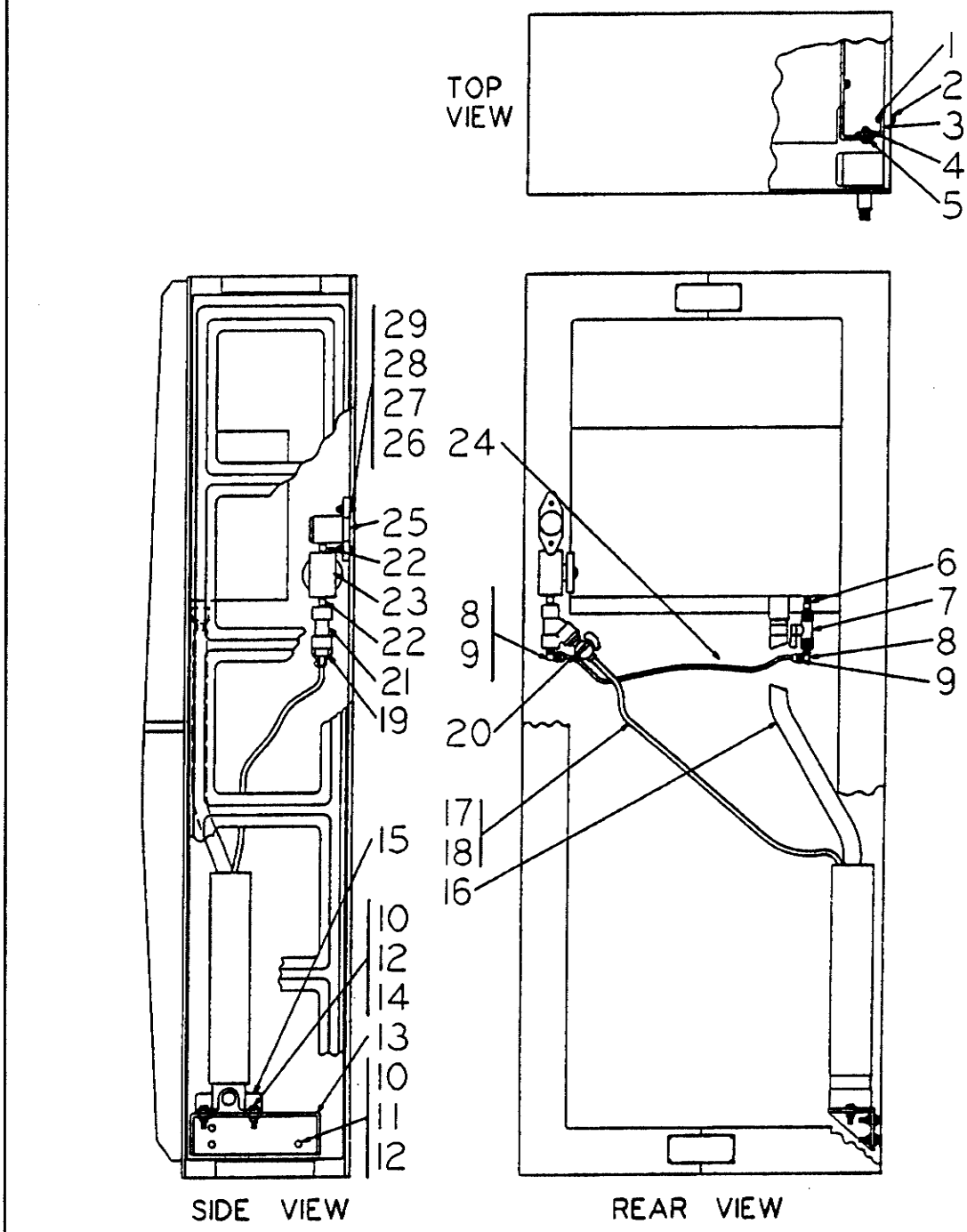

NOTE: FOR PARTS LIST SEE DWG. 50.500.002.011B.

G2161: DRAIN CHAMBER; G2177: SUPPORT HARDWARE;
G2405: WATER LINE MODULAR CABINET
ADDITIONAL PARTS - PARTS

50.500.002.011A
ISSUE 1 2-98

KEY NO.	PART NO.	QTY.	DESCRIPTION
○ 1	PC6239	4	HEX. NUT (STL.) 1/4-20
○ 2	P4719	4	MACH. SCREW (HEX. HD., STL.) 1/4-20 x 3/4" LG.
○ 3	P59025	2	BRACKET
○ 4	PC27649	4	1/4" LOCKWASHER (SS)
○ 5	PC16966	8	1/4" WASHER (STL.)
□ 6	P35518	1	1/4" NPT NIPPLE
□ 7	U28398	1	1/4" BALL VALVE
□ 8	P39235	2	90∞ELBOW (1/4" x 3/8")
□ 9	PXB39234	2	UNION NUT
◆ 10	P20864	5	HEX. NUT (MONEL) 5/16-18
◆ 11	P35125	3	MACH. SCREW (RD.HD.,MONEL) 5/16-18 x 1" LG.
◆ 12	P57050	10	5/16" WASHER (MONEL)
◆ 13	P58959	1	DRAIN CHAMBER BRACKET
◆ 14	P17949	2	MACH. SCREW (HEX.HD.,SS) 5/16-18 x 1-1/4" LG.
◆ 15	U25080	1	DRAIN CHAMBER
□ 16	RP52 4608	3 FT.	TUBING 1-1/4" ID (PVC)
□ 17	RK18 4484	3 FT.	TUBING 3/8" ID (HYPALON)
□ 18	P21189	1	HOSE ADAPTER
□ 19	P35108	1	REDUCING BUSHING (1/4" x 1/2" NPT)
□ 20	U24311	1	VALVE
□ 21	U27949	1	STRAINER
▲ 22	P37830	1	1/2" NPT NIPPLE
□ 23	UXA21673	1	1/2" BALL VALVE
□ 24	RP68 4464	3 FT.	TUBING 1/4" ID (POLYETHYLENE)
▲ 25	P45413	1	INLET BLOCK
▲ 26	P19888	2	1/4" WASHER (SS)
▲ 27	P44567	2	HEX. NUT (SS) 1/4-20
▲ 28	P43216	2	MACH. SCREW (FIL.HD.,SS) 1/4-20 x 1-1/4" LG.
▲ 29	P29713	2	1/4" LOCKWASHER (SS)

NOTE: ▲ PART OF G2520. ◆ PART OF G2161. ○ PART OF G2405. □ PART OF G2177.

WHEN ORDERING MATERIAL ALWAYS SPECIFY MODEL AND SERIAL NUMBER OF APPARATUS.

G2161: DRAIN CHAMBER; G2177: SUPPORT HARDWARE;
G2405: WATER LINE MODULAR CABINET
ADDITIONAL PARTS - PARTS LIST

50.500.002.011B
ISSUE 1 2-98

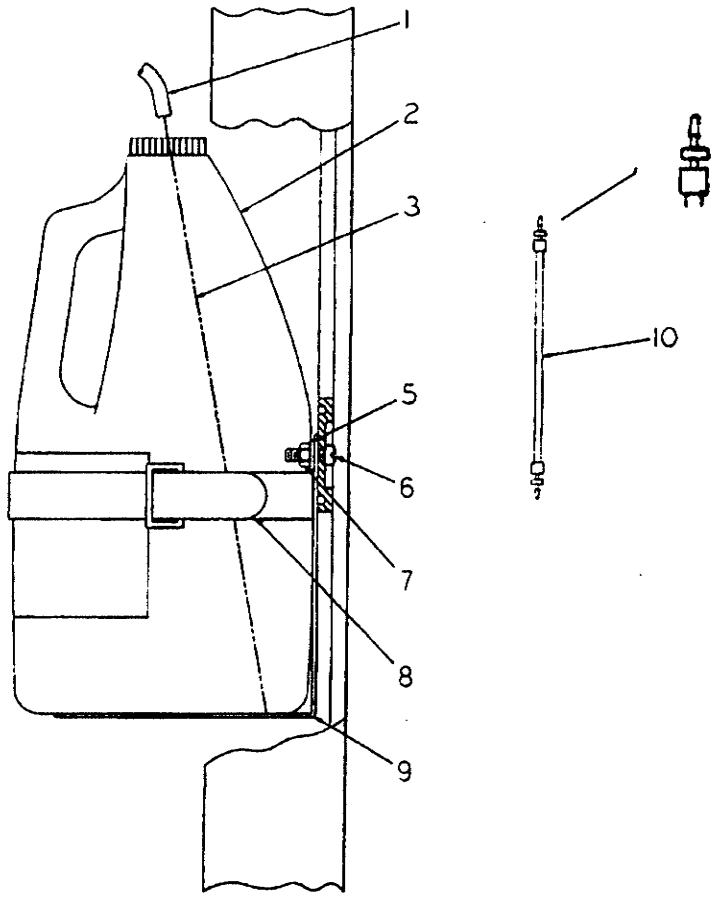

KEY NO.	PART NO.	QTY.	DESCRIPTION
1	■ RP63 4411	8'	TUBING (.020 ID) NORPRENE
2	U 29407	1	BOTTLE
3	CHS4017	13"	RIGID TUBING (.027 ID)
5	P 29713	2	1/4" LOCKWASHER (SS)
6	P 42901	2	MACH. SCREW (RD.HD.,SS) 1/4"-20 x 3/4" LG
7	P 44567	2	HEX. JAM NUT (SS) 1/4"-20
8	PXB 52592	1	STRAP
9	P 58160	1	BOTTOM BRACKET SHELF
10	U 29399	1	REAGENT TUBE UNIT

NOTE: ■ NOT PART OF AAA8849.

WHEN ORDERING MATERIAL ALWAYS SPECIFY MODEL AND SERIAL NUMBER OF APPARATUS.

G2401: WALL-MOUNTED; G2404: MODULE-MOUNTED
REAGENTS - PARTS

50.505.020.010
ISSUE 3 6-02

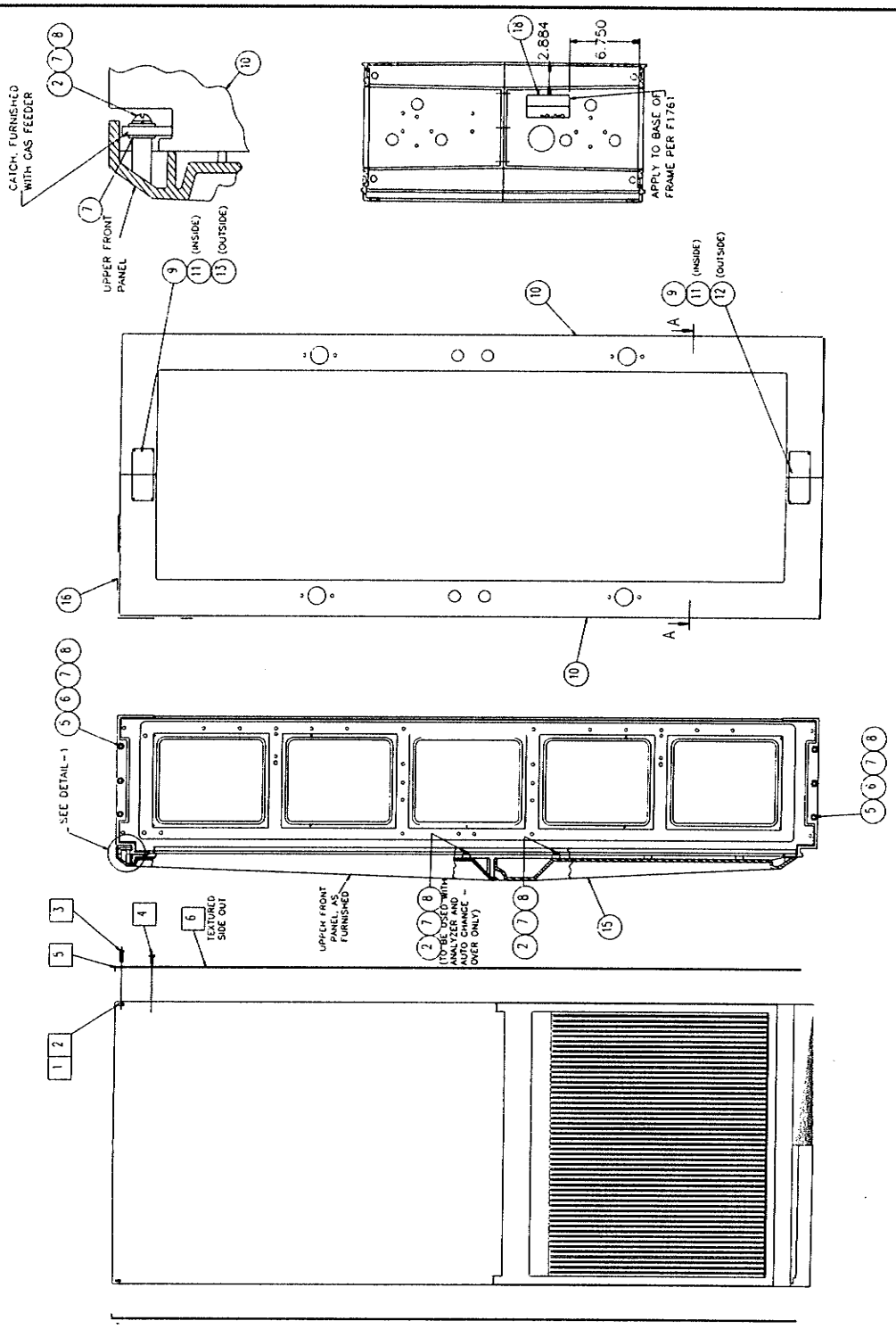

NOTE: FOR PARTS LIST, SEE DWG. 25.055.004.010B.

MODULE ENCLOSURE - PARTS

25.055.004.010A

ISSUE 3 6-97

KEY NO.	DESCRIPTION	PART NO.	QTY.
[1]	10-32 MONEL NUT	P16541	2
[2]	#10 MONEL WASHER	P33415	2
[3]	10-32 MONEL SCREW	P47607	2
[4]	CLIP - PUSH	P57595	10
[5]	RAIL TRIM	AAA7145	1
[6]	PANEL, MODULE END	AAA7142	1
(1)	3/8-16 X 2" LG. HEX BOLT HD.	P56293	4
(2)	1/4-20 X 7/8"LG. SCREW	P52329	10
(3)	3/8 FLAT WASHER	P1090	4
(4)	3/4 FLAT WASHER	PB2018	4
(5)	1/4-20 HEX NUT	P16542	6
(6)	1/4-20 X1"LG MONEL SCREW	P16545	6
(7)	1/4" FLAT WASHER	P16556	22
(8)	MONEL LOCKWASHER	P18102	16
(9)	6-32 X 1/2" LG. SELF TAP SCREW	P58573	8
(10)	MODULE FRAME	AAA6611	2
(11)	TIE STIFFENER NUT	P57579	2
(12)	TIE STIFFENER PLATE	P57580	1
(13)	IDENTIFICATION PLATE	P58164	1
(15)	LOWER FRONT PANEL	AAA5735	1

WHEN ORDERING MATERIAL, ALWAYS SPECIFY MODEL AND SERIAL NUMBER OF APPARATUS.

MODULE ENCLOSURE - PARTS LIST

25.055.004.010B

ISSUE 4 6-97

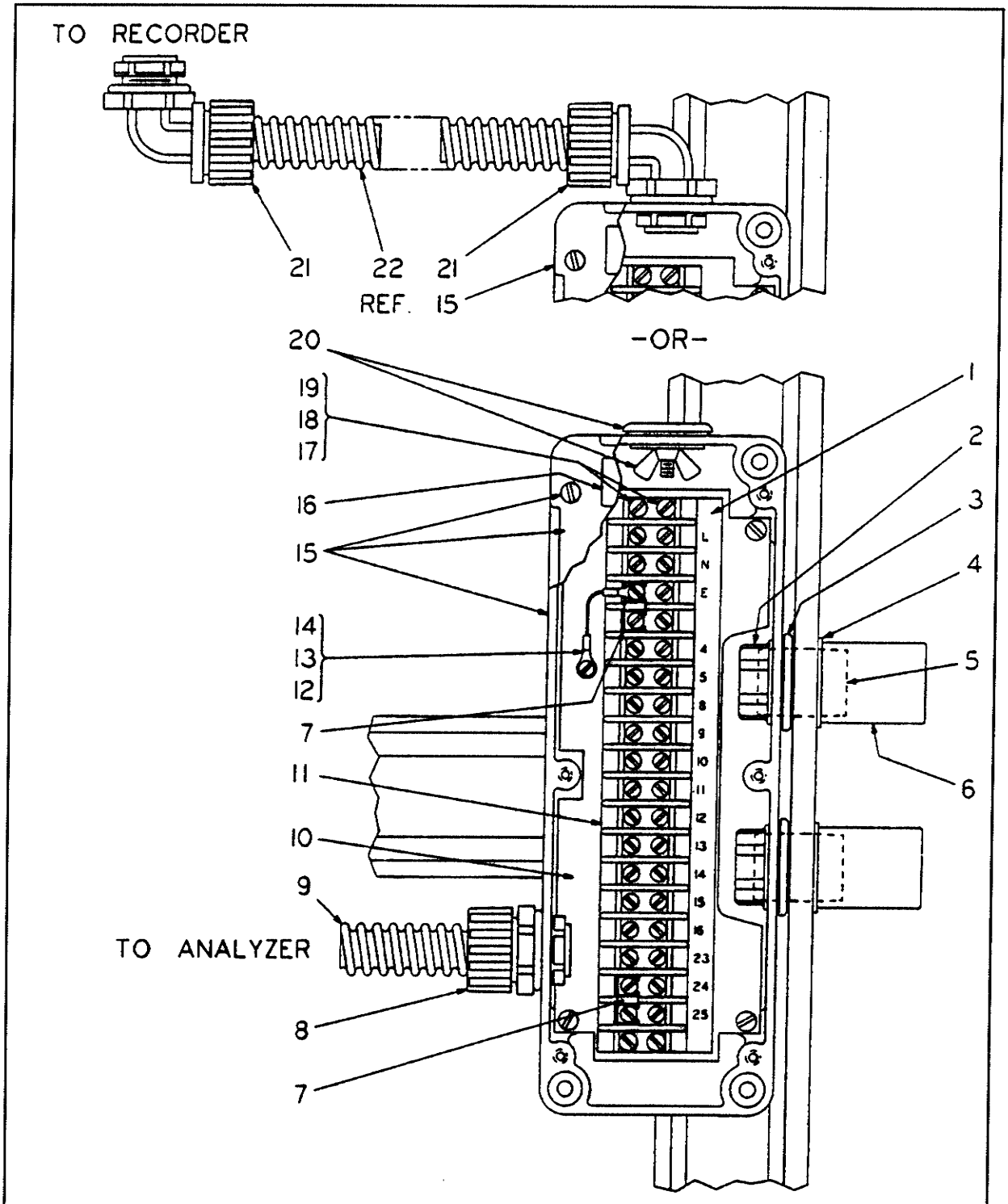

NOTE: FOR PARTS LIST, SEE DWG. 50.505.020.020B.

G2402 JUNCTION ENCLOSURE - PARTS

50.505.020.020A

ISSUE 1 2-98

KEY NO.	PART NO.	QTY.	DESCRIPTION
1	P 60557	1	MARKER STRIP
2	P 38033	2	3/4" CONDUIT BUSHING
3	U 22761	2	3/4" CONDUIT SEALING O-RING
4	P 36422	1	#10 WASHER (SS)
5	P 48246	2	CONDUIT NIPPLE
6	P 38578	2	3/4" PIPE CONDUIT COUPLING
7	P 50475	2	JUMPER
8	U 27943	2	1/2" CONNECTOR
9	P 58207	2'8"	1/2" PVC CONDUIT
10	P 60559	1	MOUNTING PANEL
11	U 29416	1	18PT. TERMINAL BLOCK
12	P 36635	1	TERMINAL LUG
13	P 31220	5'6"	#16 GA. WIRE
14	P 36439	1	#10 TERMINAL LUG
15	U 29418	1	JUNCTION BOX
16	L 2016	1	WARNING LABEL
17	FP 2432	4	MACH. SCREW (PAN HD., SS) #8-32 x 3/4" LG
18	P 43747	4	#8 LOCKWASHER (SS)
19	P 29488	4	HEX. NUT (SS) #8-32
20	P 56453	1	SEAL HOLE
■ 21	U 28019	2	1/2" x 90∞CONNECTOR
■ 22	P 58207	5'	1/2" FLEXIBLE CONDUIT
---	L 2016	1	LABEL (NOT SHOWN AFFIXED TO KEY NO. 10)

NOTE: ■ NOT PART OF G4202.

WHEN ORDERING MATERIAL, ALWAYS SPECIFY MODEL AND SERIAL NUMBER OF APPARATUS.

G2402 JUNCTION ENCLOSURE - PARTS LIST

50.505.020.020B

ISSUE 2 8-02

SECTION 6 - SPARE PARTS LIST

Residual Analyzer

QTY. (recommended minimum)	DESCRIPTION	PART NO.
1	Preventive Maintenance Kit	G2416
▲ 1	Sample Tube Assembly (Sample Metering Pump)	U29398
▲ 2	Reagent Tube Assembly (Sample Metering Pump)	U29399
▲ 1 Tube	Silicone Grease (for Impeller Shaft Seal)	U10242
▲ 1	Impeller Shaft Seal	P60207
▲ 1	Impeller Shaft	P60414
▲ 1	Grit Guard, Impeller Shaft	P60210
▲ 1	O-ring (For Cell,size #018,EPDM)	PXE51161
16 Feet	Reagent Tubing (yellow,5/32 OD,Norprene)	RK634411
4 Feet	Sample Tubing (black,1/4" OD,Norprene)	RK634442
2 Feet	Sample Tubing (translucent,1/4" OD,L.D.P.E.)	RP704818
1 Tube	Grit	UXB10846
6" length	Probe Junction Material	RP682260
1 2oz. Bottle	Probe Electrolyte Solution	U28039
1 Bottle	Potassium Iodide, 500 grams	U23661
1 6oz. Bottle	Detergent Additive	U29142
-or-		
1 one-gal. Bottle	Detergent Additive	UXA29142
1	Fuse, 5x20mm, 200mA, 250 Power Supply Board (115v)	UXG92568
-or-		
1	Fuse, 5x20mm, 100mA, 250 Power Supply Board (230v)	UXD92568
1	Fuse, 1/4 x 1/4, 250 mA, 250v, Slo-Blo Motors	U13434
1 Carton (4 one-gal. Bottles)	pH 4 Buffer Solution	U13765

▲ Part of G2416.

FIRE ALARM SYSTEM

TABLE OF CONTENTS:

A. INTELLIGENT FIRE ALARM CONTROL PANEL
B. INTELLIGENT LOW PROFILE SENSORS
C. METAL FIRE ALARM STATION
D. INTELLIGENT ADDRESSABLE MODULES
E. SELECT-A-STROBE SERIES VISUAL SIGNAL
F. SELECT-A-HORN/STROBE SERIES AUDIBLE SIGNAL
G. DRAWING

SUBCONTRACTOR / SUPPLIER
HARRELL & ASSOCIATES, INC.
CONTACT: DAVE HARRELL
POST OFFICE BOX 43068
FORT WORTH, TEXAS 76140
(817) 483-7582

INTELLIGENT FIRE ALARM CONTROL PANEL

MANUFACTURER: **MIRCOM**

MODEL #: **FX-2000**

Fire Alarm System
Sequence of Operations
For Mircom FX-2000

Alarm Sequence of Operation : Actuation of a manual pull station or an automatic initiating device causes system to enter ALARM mode, which includes any or all of the following operations:

1) Sound and display local fire alarm notification devices with visual and temporal audible signals as provided by Code.
2) Indicate alarm zone on Fire Alarm Control Panel (FACP).
3) Transmit signal to monitoring facility (where provided).
4) Shut down HVAC equipment as stipulated by Code or specification. (where provided)
5) Release magnetic door holders (where provided).
6) Activate any control or relay devices as stipulated by Code or specification.

Note: Actuation of a Sprinkler Water Flow Alarm is programmed by Code to be non-silenceable until water flow has ceased.

Trouble Sequence of Operations : System trouble including: ground, open (IDC, NAC & SLC) or short circuits (NAC & SLC) in supervised wiring, power loss or systemic failure will cause the system to enter TROUBLE mode, including the following operations:

1) Visual and audible trouble alarm by zone and type at FACP.
2) Provide resound for additional trouble conditions, to be superceded by any ALARM condition.

Note: Actuation of the Sprinkler Tamper Valve shall report only as a supervisory signal condition.

Elevator Controls Sequence of Operations : Initiation of a recall will send the car to the designated floor, open the doors and wait there until reset via key switch located in the elevator lobby.

1) Elevator recall to “primary floor” (1st floor) is caused by any of the following devices triggering the system alarm: smoke detectors in the 2nd floor or higher lobby or in the top of the elevator hoistway.
2) Elevator recall to “alternate floor” (2nd floor) is caused by any of the following devices triggering the system alarm: smoke detectors in the 1st floor lobby or mechanical room.

INTELLIGENT FIRE ALARM CONTROL PANEL FX-2000 SERIES

Description

Mircom's FX-2000 Series Intelligent Analog Fire Alarm Control Panel is designed to provide maximum flexibility of analog system requirements while also providing easy installation and operation at a cost-effective price.

The FX-2000 base panel consists of one intelligent analog loop controller capable of supporting 99 Analog Sensors and 99 Addressable Modules which can be wired in Class A (Style 6 or 7) or Class B (Style 4). The system can be expanded by adding additional Analog Loop Controller Modules. In addition the base panel supports 16 conventional hardwire adder modules such as the DM-1008A Initiating Circuit Module, SGM-1004A Indicating Circuit Module and the RM-1008A Relay Circuit Module. Additional conventional hardwire adder modules can be added with the ALC-H16 Adder Hardwire Loop Controller Module, which allows the system to support an additional 16 conventional adder modules. The base panel also consists of 4 Class A/B (Style Z/Y) Indicating Circuits rated at 1.7 Amps each and either a 6 or 12 Amp Power Supply.

Equipped with a large 4 x 20 Back-lit Alphanumeric LCD display, the FX-2000 utilizes a simple Menu system complete with a directional keypad, common control switches and LEDs, Alarm Queue switches and LEDs, two configurable input switches and 16 configurable zone LEDs.

Features

- Listed to UL 864, 9th edition
- Large system capacity
- Modular design
- Each Analog Loop is capable of supporting 99 Analog Sensors and 99 Addressable Modules which can be wired in Class A (Style 6 or 7) or Class B (Style 4)
- Base system supports 16 conventional hardwired modules with the provision to add more using the ALC-H16 Hardwire Loop Controller Module
- 6 or 12 Amp power supply
- Four Class A/B (Style Z/Y) Indicating Circuits rated at 1.7 Amps each
- Configurable for Two Stage operation
- Three level password protection with field programmable definition which enables the installer to determine what functions are accessible for each password level
- Panel Security to protect site configurations
- Manual Control Enable which allows password protection for all front panel function switches
- Correlatable Switch Inputs which allows for multi-functional outputs
- Four Alarm Queues with selector switches and LEDs for Alarm, Supervisory, Monitor and Trouble
- Auxiliary relay contacts for Common Alarm, Common Supervisory and Common Trouble
- RS-232 output for remote system printer or CRT
- Two Event History Logs comprised of a 1000 Alarm History Log for alarm related events and a 2000 Event Log for all events
- Front Panel Auto-Configure and/or Computer laptop Programmable
- Large 4 by 20 character Back-lit LCD Display with user friendly menu
- Common Control switches and/or indicating LEDs for System Reset, Signal Silence, Fire Drill, Acknowledge, General Alarm, Lamp Test, A.C. On, Pre-Alarm and Ground Fault
- Built-in One Man Walk Test operation
- Configurable for Coded Operation
- 16 zone configurable LED annunciator complete with individual slide-in labels for zone definition
- Supports an RS-485 interface to the QX-5000 Voice Evacuation System
- Panel selection for Canadian (ULC) or U.S.A. (UL) requirements for smoke sensors (sensitivity) via computer laptop
- Capability to adjust Intelligent Smoke Detector sensitivity level

S7010 S7010 7165-1477:111 7170-1477:119 313-97-E

City of Chicago
MEA approved
Class I (Con) E15095
Class II (Con) E15096
Class I (Add) E15097
Class II (Add) E15098
Highrise

CATALOG NUMBER 5910

NOT TO BE USED FOR INSTALLATION PURPOSES.
Mircom reserves the right to make changes at any time without notice in prices, colours, materials, components, equipment, specifications and models and also to discontinue models.

Operation

The FX-2000 is field programmable via the front panel auto configuration or a laptop computer. In addition, it allows for a three level password protection that can be field defined via a laptop computer. This unique feature allows the installer to determine what functions are accessible for each password level.

The system is also equipped with two Event History Logs; one for Alarm and the other for full panel sequence events. The Alarm History Log (1000 events) contains all alarm related functions while the Event Log (2000 events) provides a full sequence log of all operations, as well as alarms and troubles. Both Event History Logs can be used during the One Man Walk Test operation. This allows the event logs to be downloaded to a laptop or printer for a permanent record.

The FX-2000 is a very flexible system which supports both internal and external annunciation modules. The internal annunciation modules consist of the RAX-1048 Programmable Zone LED Annunciator, the IPS-2424 Programmable Input Switches Module, the FDX-008 Fan Damper Module and the AGD-048 Adder Graphic Driver Module.

All of these modules mount within the panel and are driven from the main LCD display. The external annunciator modules include the RAM-1032 and RAX-1048 LED Remote Annunciators, the MGD-32 Master Graphic Driver Module, the MGDS-16/16 Master Graphic Driver Module and the RAX-LCD Remote LCD Shared Display. The RAX-LCD Remote LCD Shared Display provides the same features as the main display on the FX-2000. In addition the RAX-LCD also acts as a driver module that allows for the RAX-1048, IPS-2424, FDX-008 and AGD-048 to be connected to it. The RAX-LCD is required as a driver module any time any of the above mentioned external annunciator modules are programmed differently from those on the main panel or are mounted remote from the main panel.

In addition to these adder modules, the FX-2000 also supports the UDACT-300A Digital Communicator Module and the PR-300 Polarity Reversal/City Tie Module. The FX-2000 also supports an RS-485 interface to the QX-5000 Emergency Zoned Audio System.

Input Correlations

All input circuits (addressable or hardwired) can be configured for non-verified alarm, verified alarm, waterflow, latching/non-latching supervisory, monitor, trouble only or remote switch inputs. All of the input configuration types listed above, with the exception of remote switch can be programmed to operate relays, signal and strobe circuits for hardwired or addressable devices. Please refer to the chart below for correlations. The input circuits configured as non-latching will cause the output circuits configured to them to follow the state of the input device. This feature allows for the connection of multiple panels together for signal operation.

The Remote Switch input, which must be momentary, allows any input type device (addressable or hardwired) to be configured as a common control functions such as fire drill, system reset, signal silence etc. The remote switches operate in a momentary mode like the control switches on the FX-2000 main panel. For functions such as fire drill, the remote switch functions in a toggle mode, with one press for “on” and one press for “off”. The remote switch is supervised for “stuck in on” positions, where the switch input is activated (stuck) for more than 30 seconds. If this occurs, a trouble is generated and clears when the input goes away.

Intelligent or Conventional Input Types	Output			Control Switches
	Relay	Signal	Strobe	
Non-Verified Alarm	Yes	Yes	Yes	No
Verified	Yes	Yes	Yes	No
Waterflow	Yes	Yes	Yes	No
Non-Latching Supervisory	Yes	Yes	Yes	No
Latching Supervisory	Yes	Yes	Yes	No
Monitor	Yes	Yes	Yes	No
Trouble Only	Yes	Yes	Yes	No
Remote Switch Input	No	No	No	Yes

FX-2000 Standard Series

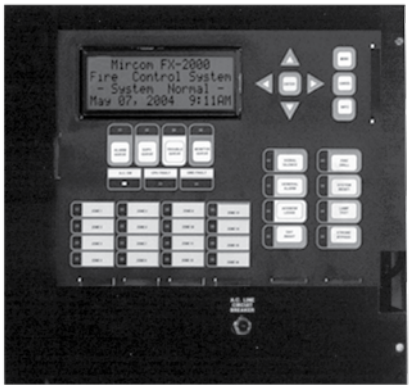

FX-2003-6/FX-2003-12 Compact Main Chassis
The FX-2003-6/FX-2003-12 Compact Main Chassis comes complete with one Analog Loop Controller (99 Analog Sensors and 99 Addressable Modules), 4 Class A/B (Style Z/Y) Indicating Circuits (1.7 Amps each), a 4 line by 20 character back-lit LCD display, 16 Zone LED Annunciator and either a 6 Amp Power Supply which charges 10-24 AH batteries or a 12 Amp Power Supply which charges 17-40 AH batteries. The FX-2003-6/FX-2003-12 supports 16 conventional adder modules and provides space for 3 adder modules. The FX-2003-6/FX-2003-12 mounts in the BBX-1024 enclosure.

FX-2009-12 Large Size Main Chassis
The FX-2009-12 Large Size Main Chassis comes complete with one Analog Loop Controller (99 Analog Sensors and 99 Addressable Modules), 4 Class A/B (Style Z/Y) Indicating Circuits (1.7 Amps each), a 4 line by 20 character back-lit LCD display, 16 Zone LED Annunciator and a 12 Amp Power Supply which charges 17-40 AH batteries. The FX-2009-12 supports 16 conventional adder modules and provides space for up to 9 adder modules and 2 internal annunciator adder modules. The FX-2009-12 mounts in the BB-5000 Series enclosures.

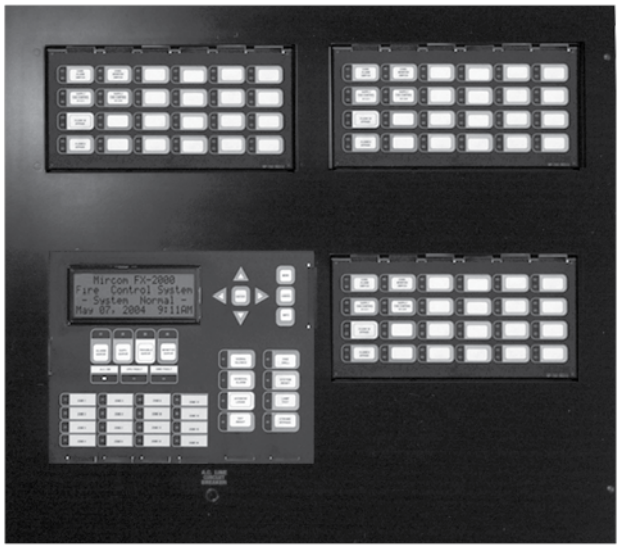

FX-2017-12A Mid-Size Main Chassis
The FX-2017-12A Mid-Size Main Chassis comes complete with one Analog Loop Controller (99 Analog Sensors and 99 Addressable Modules), 4 Class A/B (Style Z/Y) Indicating Circuits (1.7 Amps each), a 4 line by 20 character back-lit LCD display, 16 Zone LED Annunciator and a 12 Amp Power Supply which charges 17-40 AH batteries. The FX-2017-12A supports 16 conventional adder modules and has space for up to 17 adder modules and 3 internal annunciator adder modules. The FX-2017-12A mounts in the BBX-1072A enclosure.

ECX-0012 Expander Chassis
The ECX-0012 Expander Chassis for the FX-2009-12/FX-2009S-12 supports up to 12 adder modules and has space for 2 internal annunciator modules. The ECX-0012 mounts in the BB-5000 series enclosures.

FX-2000 Standard Series System Maximums

- **500** Input Circuits
- **150** Output Circuits
- **5** Intelligent Addressable Loops
- **4** Remote LCD Annunciators
- **4** Main LED Annunciators
- **100** Manual Control Switches

NOTE: Refer to page 4 for Enhanced Series Maximums

FX-2000 Enhanced Series

Mircom's FX-2000 Enhanced Series feature a powerful CPU which increases the processing of inputs/outputs to provide faster response times and allow for larger system capacities. The Main Chassis are available in the same configurations as the standard FX-2000 Series.

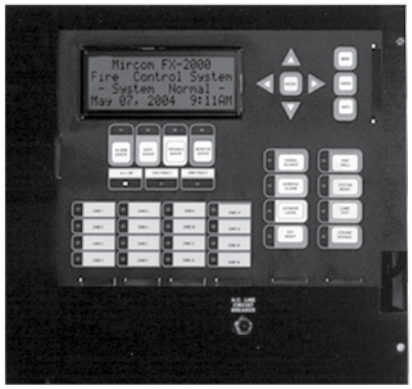

FX-2003S-12 Enhanced Series Compact Main Chassis
The FX-2003S-12 Enhanced Compact Main Chassis comes complete with 4 Class A/B (Style Z/Y) Indicating Circuits (1.7 Amps each), a 4 line by 20 character back-lit LCD display, 16 Zone LED Annunciator and a 12 Amp Power Supply which charges 17-40 AH batteries. The FX-2003S-12 provides space for 3 ALC-396S Dual Loop Controller Modules. The FX-2003S-12 mounts in the BBX-1024 enclosure.

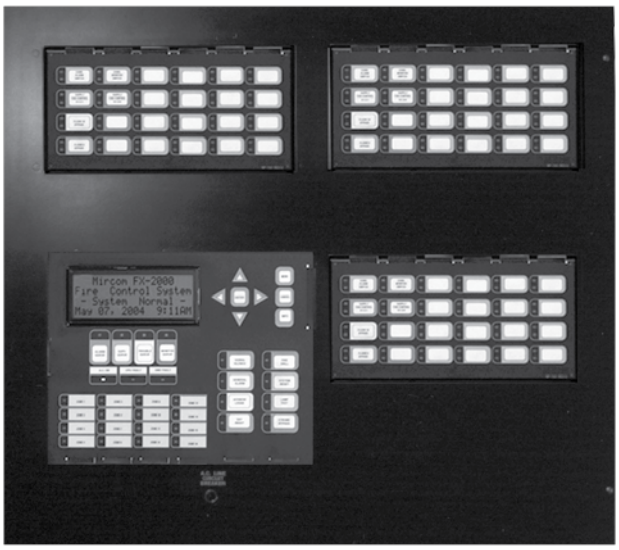

FX-2017S-12A Enhanced Series Mid-Size Main Chassis
The FX-2017S-12A Mid-Size Main Chassis comes complete with 4 Class A/B (Style Z/Y) Indicating Circuits (1.7 Amps each), a 4 line by 20 character back-lit LCD display, 16 Zone LED Annunciator and a 12 Amp Power Supply which charges 17-40 AH batteries. The FX-2017S-12A provides space for up to 17 adder modules/Dual Loop Controllers and 3 internal annunciator adder modules. The FX-2017S-12A mounts in the BBX-1072A enclosure.

FX-2009S-12 Enhanced Series Large Size Main Chassis
The FX-2009S-12 Enhanced Large Size Main Chassis comes complete with 4 Class A/B (Style Z/Y) Indicating Circuits (1.7 Amps each), a 4 line by 20 character back-lit LCD display, 16 Zone LED Annunciator and a 12 Amp Power Supply which charges 17-40 AH batteries. The FX-2009S-12 electrically supports 16 conventional adder modules and provides space for up to 9 adder modules and 2 internal annunciator adder modules. The FA-2009S-12 mounts in the BB-5000 Series enclosures.

ECX-0012 Expander Chassis
The ECX-0012 Expander Chassis for the FX-2009-12/ FX-2009S-12 supports up to 12 adder modules and has space for 2 internal annunciator modules. The ECX-0012 mounts in the BB-5000 series enclosures.

FX-2000 Enhanced Series System Maximums

- **1500** Input Circuits
- **300** Output Circuits
- **30** Intelligent Addressable Loops
- **24** Remote LCD Annunciators
- **4** Main LED Annunciators
- **300** Manual Control Switches

Adder Loop Controller Modules

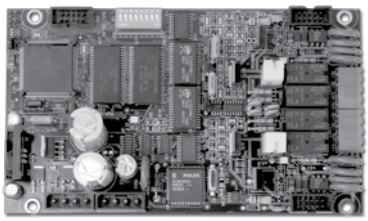

ALC-198S Single Analog Loop Controller Module
The ALC-198S Single Analog Loop Controller Module provides an additional analog loop to the FX-2000 consisting of 99 Analog Sensors and 99 Addressable Modules. The ALC-198S occupies one module slot in the FX-2000 main or expander chassis.

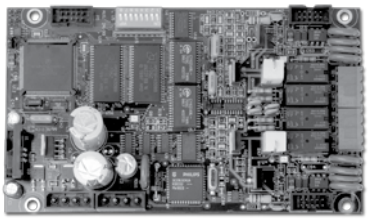

ALC-396S Dual Analog Loop Controller Module
The ALC-396S Dual Analog Loop Controller Module provides two additional analog loops to the FX-2000 consisting of 99 Analog Sensors and 99 Addressable Modules per loop. The ALC-396S occupies one module slot in the FX-2000 main or expander chassis.

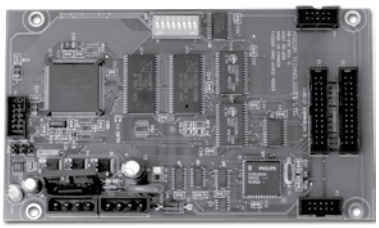

ALC-H16 Hardwire Loop Controller Module
The ALC-H16 Hardwire Loop Controller Module allows the FX-2000 to support an additional sixteen (16) conventional hardwire adder modules. The hardwire modules consist of the DM-1008 Eight Initiating Circuit Module, SGM-1004 Four Indicating Circuit Module and the RM-1008 Eight Relay Circuit Module. The ALC-H16 occupies one module slot in the FX-2000 main or expander chassis.

Adder Auxiliary Modules

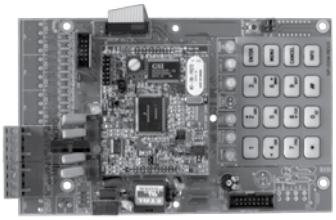

UDACT-300A Digital Alarm Communicator Module
The UDACT-300A Digital Alarm Communicator Module allows the FX-2000 to transmit addressable point information to a central station. The UDACT-300A can be configured locally via the on-board keypad and the CFG-300 Configuration Tool or with a UIMA programming tool and a computer with an available serial or USB port. The UDACT-300A occupies one module slot in the FX-2000 main or expander chassis.

Adder Hardwire Modules

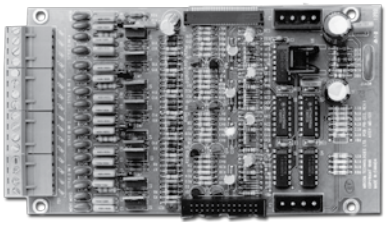

DM-1008A Eight Initiating Circuit Module
The DM-1008A provides 8 Class B (Style B) or 4 Class A (Style D) Initiating Circuits configurable for Alarm, Supervisory or Trouble zones. The DM-1008A occupies one module slot in the FX-2000 main or expander chassis.

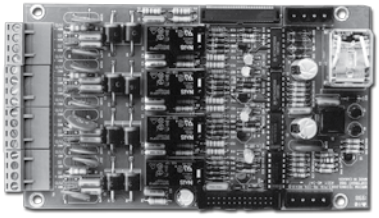

SGM-1004A Four Indicating Circuit Module
The SGM-1004A provides 4 Class A/B (Style Z/Y) Indicating Circuits configurable as Silenceable or Non-Silenceable. Each Indicating Circuits is rated at 1.7 Amps. Each of the indicating circuits have individual signal silence inputs which are jumper selectable. The SGM-1004A occupies one module slot in the FX-2000 main or expander chassis.

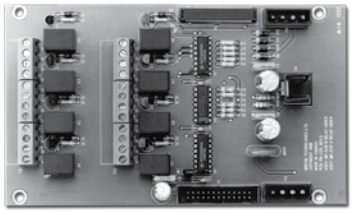

RM-1008A Eight Relay Circuit Module
The RM-1008A provides the FX-2000 with 8 individual configurable relays per module. Each relay provides one Form C contact rated at 28 VDC @1 Amp (resistive load). The RM-1008A occupies one module slot in the FX-2000 main or expander chassis.

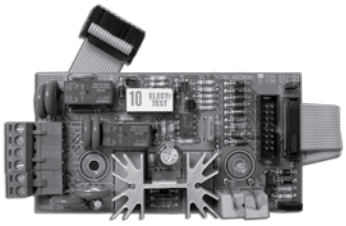

PR-300 Polarity Reversal/City Tie Module
The PR-300 Polarity Reversal/City Tie Module provides the system with a supervised City Tie (24 VDC/200 mA max.) and Polarity Reversal connection (24 VDC (open circuit), 8 mA max. (shorted)). The PR-300 mounts in the FX-2000 main chassis.

Programmable Modules

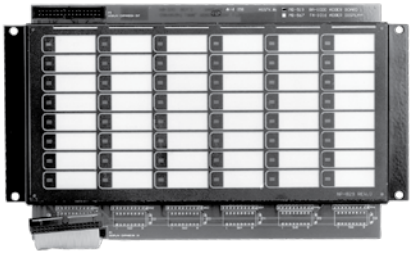

RAX-1048 Programmable Zone LED Annunciator Module

The RAX-1048 Programmable Zone LED Annunciator Module provides 48 programmable bi-coloured LEDs. The RAX-1048 connects to the main panel or the RAX-LCD Shared Display when mounted remotely. The RAX-1048 occupies one display position in the BB-1000 or BB-5000 enclosures.

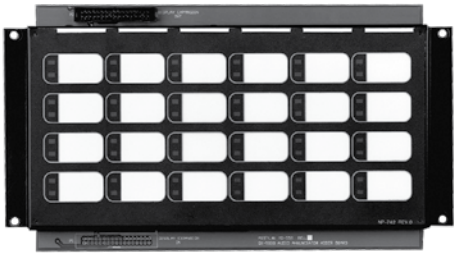

FDX-024 Fan Damper Module

The FDX-024 Fan Damper Module provides 24 individually programmable switches which can be used for fan or damper control. Each circuit has 24 Bi-Coloured LEDs (Green/Amber) and 24 Amber Select LEDs. The FDX-024 connects to main panel or the RAX-LCD when mounted remotely.The FDX-024 occupies one display position in the BB-1000 or BB-5000 enclosures.

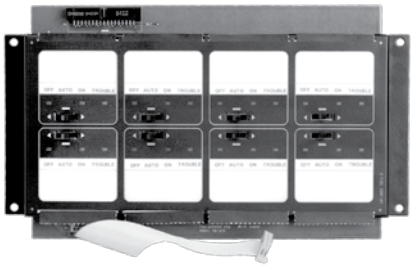

FDX-008 Fan Damper Module

The FDX-008 Fan Damper Module provides individually programmed circuits which can be used for fan or damper control. Each circuit has a slide-in label, a three position selector switch, green “run or open” LED and an amber “off or closed” LED. The three-position selector switch has a centre “auto” position, a left “off or close” position and a right “on or open” position. The FDX-008 connects to the main panel or the RAX-LCD when mounted remotely. It uses MIX-M500CH for control of fans or dampers and two MIX-M501A for status. The FDX-008 occupies one display position in the BB-1000 or BB-5000 enclosures.

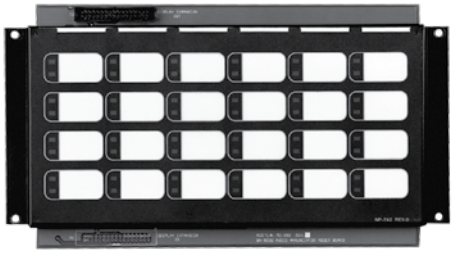

IPS-2424 Programmable Input Switches Module

The IPS-2424 Programmable Input Switches Module provides 24 programmable switches that can be configured for ancillary functions such as zone bypass or added common control functions. The switches operate in a toggle operation with one press for “on” and one press for “off”. The IPS-2424 connects to main panel or the RAX-LCD when mounted remotely. The IPS-2424 occupies one display position in the BB-1000 or BB-5000 enclosures.

Electrical Ratings

Current Consumption

Model	Standby	Alarm
FX-2003-6/FX-2003-12	230 mA	380 mA
FX-2017-12A	230 mA	380 mA
FX-2009-12	230 mA	380 mA
ALC-198S/ALC-396S	35 mA	50 mA
ALC-H16	35 mA	50 mA
DM-1008A	80 mA	100 mA
SGM-1004A	35 mA	150 mA
RM-1008A	25 mA	150 mA
PR-300	50 mA	300 mA
UDACT-300A	40 mA	60 mA
RAX-LCD	100 mA	150 mA
IPS-2424	10 mA	144 mA
FDX-008	10 mA	100 mA
MGD-32	35 mA	1.6 Amps
AGD-048	25 mA	2.4 Amps
RAM-1032	50 mA	150 mA
RAX-1048	15 mA	100 mA

Remote Annunciators

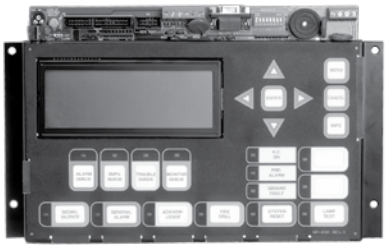

RAX-LCD Remote Shared Display
The RAX-LCD Remote Shared Display is a remote annunciator that provides the same functions as the main display on the fire alarm control panel, less the 16 zone LEDs. In addition to operating as a remote annunciator, it can also be used as a driver module for standard LED annunciation or reduced zone annunciation (different from the main panel annunciation), graphic drivers programmed different from the main annunciators, programmable switch modules with a unique configuration and fan damper control also with a unique configuration. Each time a different type of annunciation configuration is needed an additional RAX-LCD is required. The RAX-LCD occupies one display position in the BB-1000 or BB-5000 enclosures.

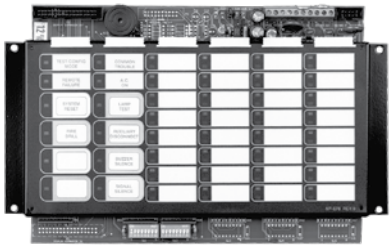

RAM-1032 Main Remote LED Annunciator
The RAM-1032 Main Remote LED Annunciator provides common annunciator functions and 32 points of LED annunciation. Each display point can be identified by the slide-in label that slides in beside the LED. The RAM-1032 is equipped with sealed membrane-like buttons for Common Control functions. The RAM-1032 allows for the control switches to be disabled on a per function basis for areas that do not require certain common control functions to be remotely located from the fire alarm control panel. The RAM-1032 can be programmed differently than the main panel annunciator or a remote RAX-LCD. All RAM-1032 remote annunciators on the system must be programmed the same. The RAM-1032 occupies one display position in the BB-1000 or BB-5000 enclosures.

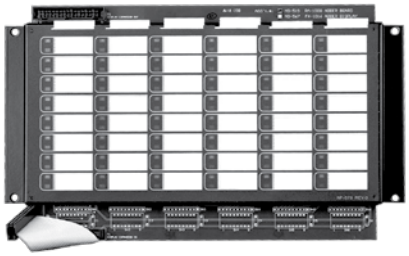

RAX-1048 Adder Remote LED Annunciator
The RAX-1048 Adder Remote LED Annunciator provides an additional 48 points of LED annunciation. The RAX-1048 is an expandible module that connects to the RAM-1032. The RAX-1048 occupies one display position in the BB-1000 or BB-5000 enclosures.

Graphic Annunciator Driver Modules

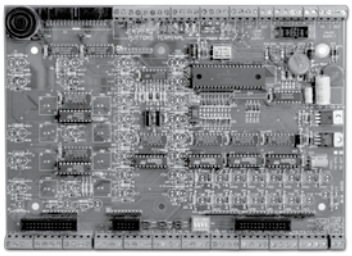

MGD-32 Master Graphic Driver Module
The MGD-32 Master Graphic Driver Module provides common control inputs for the common control switches such as System Reset, Signal Silence, Auxiliary Disconnect, Fire Drill, Lamp Test, Acknowledge and General Alarm. Any or all of these switch inputs can be used. There are supervised outputs for all of the support LEDs and the common control switches. The MGD-32 can also drive up to 32 supervised outputs. These output points are capable of driving LEDs or incandescent lamps. Mounts in a graphic annunciator wallbox or in the BB-5000 enclosures. External power supply required for incandescent lamps and lamp test.

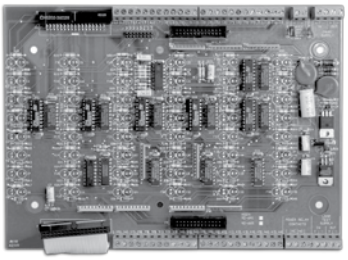

AGD-048 Adder Graphic Driver Module
The AGD-048 Adder Graphic Driver Module can be used with either the MGD-32 or MGDS-16/16 Master Graphic Driver modules, or if located remotely it must be connected and mounted with the RAX-LCD Shared Display. The AGD-048 will support an additional 48 supervised outputs. As with the master modules, the AGD-048 will support both LEDs and incandescent lamps. Mounts in a graphic annunciator wallbox or in the BB-5000 enclosures.

NOTE:
The combined total of RAM-1032 and MGD-32 per system is eight. All RA-1000 Series annunciators or Graphic driver modules must have the zoned LED or graphic LED correlated to the same combination of addressable devices or hardwired zones . However, the zoned LED annunciator on the FX-2000 main panel can be programmed differently from the annunciators mounted remotely.

Enclosures

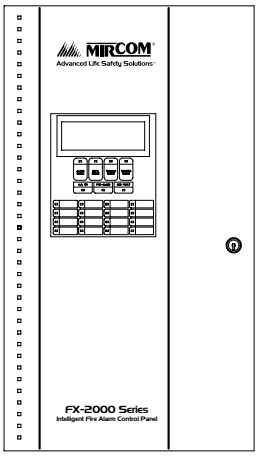

BBX-1024

The BBX-1024 enclosure is capable of handling one FX-2003-6 or FX-2003-12 Compact Main Chassis and up to 17 AH Batteries. The FA-UNIV-TRB Semi-Flush Trim Ring is required for semi- flush mounting. The cabinet features the universal CAT-30 lock and a removable door for easy installation and servicing. The cabinet is available in a beige or red exterior (BBX-1024R).
Dimensions: 26"H x 14 1/2"W x 4 1/2"D

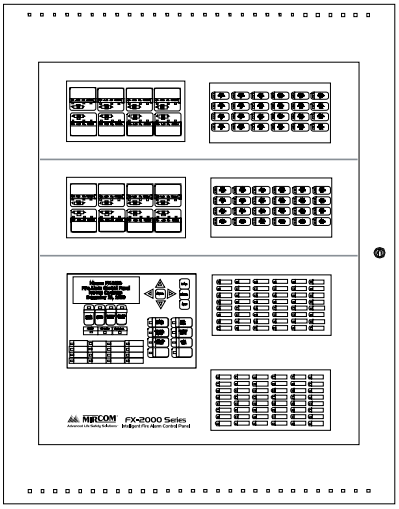

BB-5008

The BB-5008 is a lobby control centre enclosure which is capable of handling one FX-2009-12 Large Main Chassis which supports 2 internal annuciator modules such as the IPS-2424, FDX-008, RAX-1048, etc. In addition the BB-5008 allows for 4 footprints for mounting Audio Lobby Control modules, Fire Fighter's Lobby Control modules and FX-2000 Internal Annunciator modules. The cabinet hold up to 24 AH batteries. Door and Chassis hardware are ordered seperately.
Dimensions: 36"H x 30"W x 7"D

Other Enclosures

BB-1001: 9"H x 12.75"W x 1.2"D
BB-1002: 18"H x 12.75"W x 1.2"D
BB-1003: 26.4"H x 12.75"W x 1.2"D
BB-1008: 33"H x 22.5"W x 1.25"D
BB-1012: 45"H x 22.5"W x 1.25"D

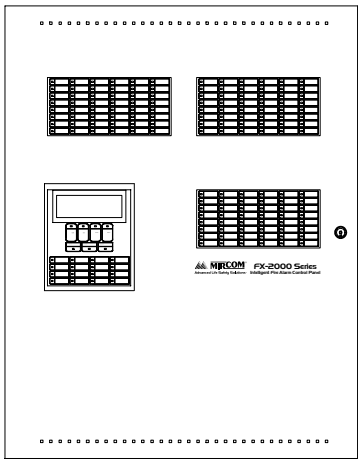

BBX-1072A

The BBX-1072A enclosure is capable of handling one FX-2017-12A Mid-Size Main Chassis, as well as up to 40 AH Batteries. The cabinet features the universal CAT-30 lock and a removable door for easy installation and servicing. The cabinet is available in a beige or red exterior (BBX-1072AR).
Dimensions: 32 1/2"H x 25"W x 6 1/2"D

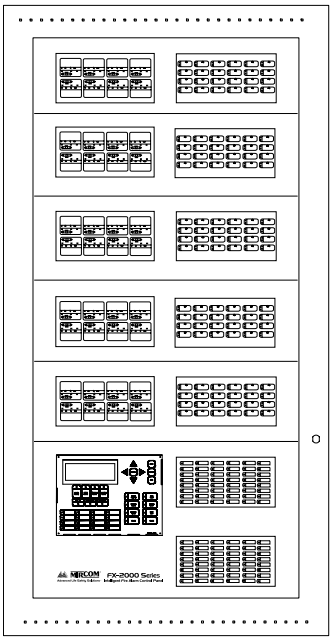

BB-5014

The BB-5014 is a lobby control centre enclosure which is capable of handling one FX-2009-12 Large Main Chassis which supports 2 internal annuciator modules such as the IPS-2424, FDX-008, RAX-1048, etc. In addition the BB-5014 allows for 10 footprints for mounting Audio Lobby Control modules, Fire Fighter's Lobby Control modules and FX-2000 Internal Annunciator modules. The BB-5014 can also support a graphic annunciator in place of these modules. The cabinet holds up to 24 AH batteries. Door and Chassis hardware are ordered seperately.
Dimensions: 60"H x 30"W x 7"D

Typical FX-2000 Panel Wiring Class B (Style 4)

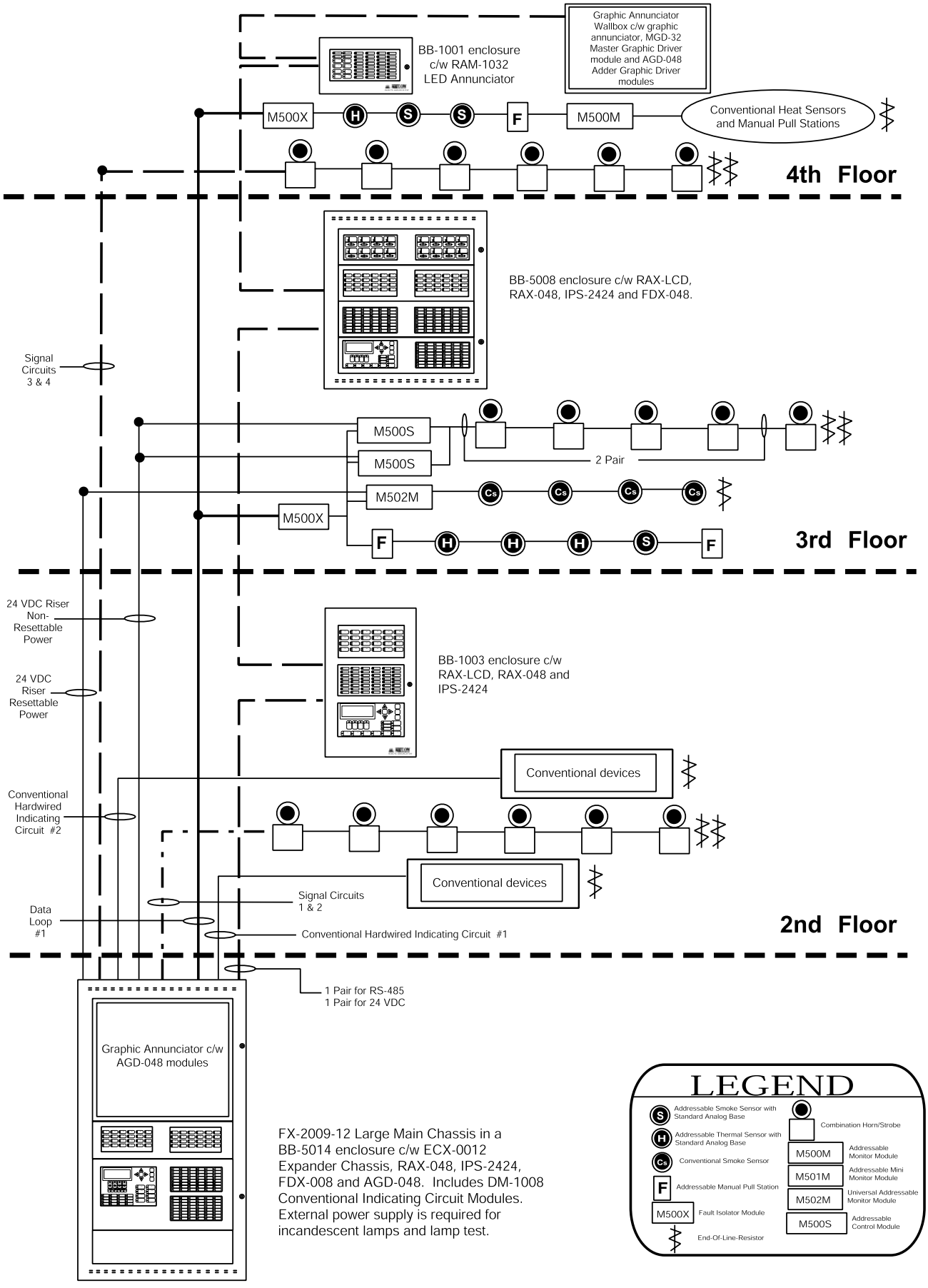

FX-2009-12 Large Main Chassis in a BB-5014 enclosure c/w ECX-0012 Expander Chassis, RAX-048, IPS-2424, FDX-008 and AGD-048. Includes DM-1008 Conventional Indicating Circuit Modules. External power supply is required for incandescent lamps and lamp test.

Ordering Information

Model	Description
FX-2000 Standard Series	
FX-2003-6	Compact Main Chassis c/w one Intelligent Analog Loop Controller (99 Analog Sensors and 99 Addressable Modules), 4 x 20 Back-lit LCD display, 4 Class A/B (Style Z/Y) Indicating Circuits (1.7 Amps each), 16 LED annunciation points and a 6 Amp power supply. Supports up to 16 Conventional Adder Modules. Provides space for 3 Adder Modules. Mounts in the BBX-1024 enclosure.
FX-2003-12	Same as above with 12 Amp Power Supply.
FX-2017-12A	Mid-Size Main Chassis c/w one Intelligent Analog Loop Controller (99 Analog Sensors and 99 Addressable Modules), 4 x 20 Back-lit LCD display, 4 Class A/B (Style Z/Y) Indicating Circuits (1.7 Amps each), 16 Red LED annunciation points and a 12 Amp power supply. Supports up to 16 Conventional Adder Modules. Provides space for 17 Adder Modules and 3 Internal Annunciation modules. Mounts in the BBX-1072A enclosure.
FX-2009-12	Large Main Chassis c/w one Intelligent Analog Loop Controller (99 Analog Sensors and 99 Addressable Modules), 4 x 20 Back-lit LCD display, 4 Class A/B (Style Z/Y) Indicating Circuits (1.7 Amps each), 16 Red LED annunciation points and a 12 Amp power supply. Supports up to 16 Conventional Adder Modules. Provides space for 9 Adder Modules and 2 Internal Annunciation modules. Mounts in the BB-5000 series enclosures.
ECX-0012	Expander Chassis for the FX-2009-12 c/w space to add up to 12 adder modules and 2 Internal Annunciation modules. Mounts in the BB-5000 series enclosures.
FX-2000 Enhanced Series	
FX-2003S-6	Compact Main Chassis c/w 4 x 20 Back-lit LCD display, 4 Class A/B (Style Z/Y) Indicating Circuits (1.7 Amps each), 16 LED annunciation points and a 6 Amp power supply. Provides space for 3 ALC-396S Dual Loop Controller Modules. Mounts in the BBX-1024 enclosure.
FX-2003S-12	Same as above with 12 Amp Power Supply.
FX-2017S-12A	Mid-Size Main Chassis c/w 4 x 20 Back-lit LCD display, 4 Class A/B (Style Z/Y) Indicating Circuits (1.7 Amps each), 16 LED annunciation points and a 12 Amp power supply. Provides space for 17 Adder Modules/Dual Loop Controller Modules and 3 Internal Annunciation modules. Mounts in the BBX-1072A enclosure.
FX-2009S-12	Large Main Chassis c/w 4 x 20 Back-lit LCD display, 4 Class A/B (Style Z/Y) Indicating Circuits (1.7 Amps each), 16 LED annunciation points and a 12 Amp power supply. Provides space for 9 Adder Modules/Dual Loop Controller Modules and 2 Internal Annunciation modules. Mounts in the BB-5000 series enclosures.
ECX-0012	Expander Chassis for the FX-2009-12 c/w space to add up to 12 adder modules and 2 Internal Annunciation modules. Mounts in the BB-5000 series enclosures.
Adder Loop Controller Modules	
ALC-198S	Single Loop Intelligent Analog Loop Controller Module (99 Analog Sensors and 99 Addressable Modules)
ALC-396S	Dual Loop Intelligent Analog Loop Controller Module (198 Analog Sensors and 198 Addressable Modules)
ALC-H16	Hardwire Loop Controller Module. Supports 16 Conventional Hardwired Modules.
Adder Hardwire Modules	
DM-1008A	Eight Class B (Style B) or 4 Class A (Style D) Initiating Circuit Module
SGM-1004A	Four Class A/B (Style Z/Y) Indicating Circuit Module (Rated at 1.7 Amps per circuit)
RM-1008A	Eight Relay Circuit Module c/w eight form C relays (Rated for 28 VDC @ 1 Amp max. per relay)
Adder Auxiliary Modules	
UDACT-300A	Digital Alarm Communicator Transmitter/Dialer Module
PR-300	Polarity Reversal and City Tie Module
Programmable Modules	
RAX-1048	Programmable Zone LED Annunciator Module c/w 48 bi-coloured LEDs
IPS-2424	Programmable Input Switches Module c/w 24 selector switches and 24 bi-coloured LEDs
FDX-008	Fan Damper Control Module c/w 8 programmable switches
FDX-024	Fan Damper Control Module c/w 24 programmable switches
Remote Annunciators	
RAM-1032	Main Annunciator Chassis c/w Common Control Features, Indicators and 32 Bi-Coloured LEDs
RAX-1048	Adder Annunciator Chassis c/w 48 Bi-Coloured LEDs
RTI-1	Remote Trouble Indicator
Remote Shared Display Annunciators	
RAX-LCD	Remote Shared Display LCD Annunciator c/w Display Queues and Common Controls.
Graphic Annunciator Driver Modules	
MGD-32	Master Graphic Driver Module c/w Fire Alarm Common Control Switch Inputs and 32 Supervised Outputs
AGD-048	Adder Graphic Driver Module c/w 48 Supervised Outputs
Enclosures	
BBX-1024	Black backbox enclosure for FX-2000 c/w removable door and CAT-30 lock and key. Houses one FX-2003-6, FX-2003-12, FX-2003S-6 or FX-2003S-12 Compact Main Chassis and up to 17 AH batteries. White door. *(Add suffix "R" for red door)*
BBX-1072A	Black backbox enclosure for FX-2000 c/w removable door and CAT-30 lock and key. Houses one FX-2017-12A or FX-2017S-12A Mid-Size Main Chassis, and up to 40 AH batteries. White door. *(Add suffix "R" for red door)*
BB-5008	Lobby Control Centre Wallbox Enclosure. Supports 8 Module Footprints.
DOX-5008M	White Metal Door for BB-5008
CCH-5008	Custom Mounting Kit for BB-5008. One required per BB-5008.
BB-5014	Lobby Control Centre Wallbox Enclosure. Supports 14 Module Footprints.
DOX-5014M	White Metal Door for BB-5014
CCH-5014	Custom Mounting Kit for BB-5014. One required per BB-5014.
FA-UNIV-TRB	Universal Black Semi-Flush Trim Ring for BBX-1024 Backbox

NOT TO BE USED FOR INSTALLATION PURPOSES.

MIRCOM®

Canada
25 Interchange Way
Vaughan, Ontario L4K 5W3
Telephone: (905) 660-4655
Fax: (905) 660-4113

U.S.A.
4575 Witmer Industrial Estates
Niagara Falls, NY 14305
Toll Free: (888) 660-4655
Fax Toll Free: (888) 660-4113

Web page: http://www.mircom.com Email: mail@mircom.com

Distributed by:

ISO 9001:2000 REGISTERED

MIRCOM®
Advanced Life Safety Solutions

FX-2000 Series

Fire Alarm Control Panel

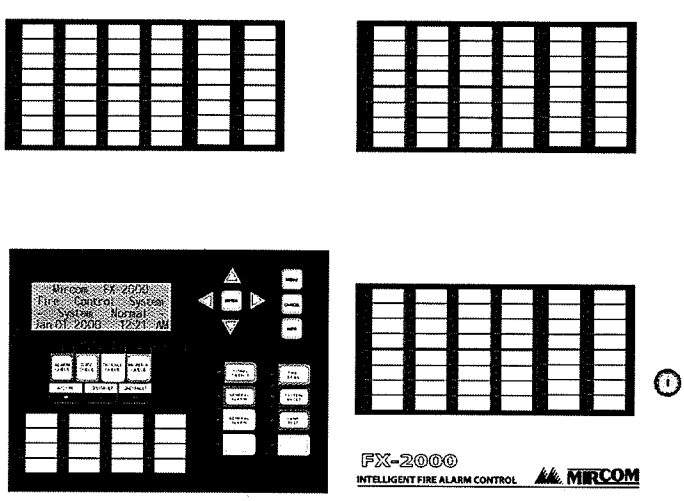

User's Guide

LT-882 Rev. 0
February 2004

Contents

Introduction **1**
About this Manual 1
Technical Support 1
Front Panel Indicators, Controls, and Operation **2**
Front Panel Indicators and Control Locations 2
Common Indicators 3
Common Controls 4
Troubleshooting **7**
Start Up **8**
Menu Mode 9
Passcodes 10
Front Panel Menu Operation **11**
1. Reports Menu 11
2. Bypass Menu 17
3. Walk Test Menu 22
Alternate Menu Option #3: Manual Control Enable 25
4. Change Passcode 26
5. Day/Night Mode 27
6. Set Time/Date 28
7. Clear Event Log 29
8. Clear Verification Counter 30
9. Auto Program 31

Introduction

About this Manual

This user's guide provides information on using the FX-2000 Fire Alarm Control Panel Command Menu features. Using the instructions provided in this manual, you will be able to

- Print reports
- Bypass devices, circuits, loops, and disconnect relays
- Perform a walk test
- Change your passcode
- Clear logs and counters
- Set Day/Night mode and Time
- Auto program the system

Technical Support

For all technical support inquiries, please contact Mircom's Technical Support Department between 8 A.M. and 5 P.M. (EDT) Monday through Friday, excluding holidays.

Local Phone: 905-695-3535 **Toll-Free Phone:** 1-888-449-3535

Local Fax: 905-660-4113 **Toll-Free Fax:** 1-888-660-4113

Email: techsupport@mircom.com

Front Panel Indicators, Controls, and Operation

Front Panel Indicators and Control Locations

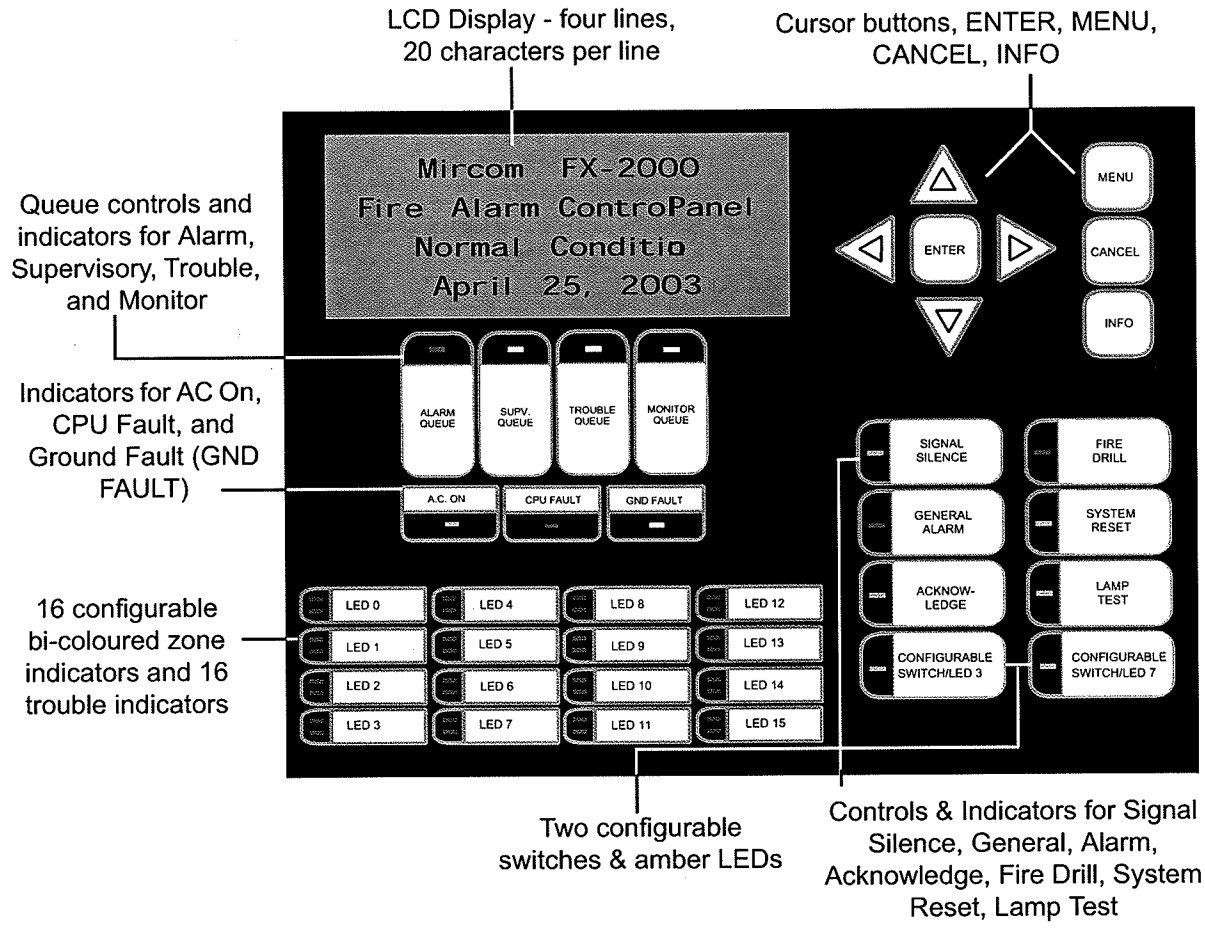

Note: The General Alarm LED and pushbutton, and the Acknowledge LED and pushbutton, are active only on a system configured for two stages.

LED indicators are amber (trouble or supervisory), red (alarm), or green (AC On), and may illuminate continuously (steady) or at one of two flash rates:

- **Fast flash:** 120 flashes per minute, 50% duty cycle
- **Trouble flash:** 20 flashes per minute, 50% duty cycle

Paper Labels for Buttons and Indicators

Buttons and indicators are supplied with paper labels. These labels slide into the plastic label templates on the face of the panel. Paper labels allow for easy English / French selection and custom-printed zone information.

Common Indicators

Buzzer

The buzzer is activated by any of the following:

- **Fire alarm**: steady
- **Supervisory alarm**: fast flash rate
- **Trouble**: trouble flash rate
- **Monitor**: Configurable to sound at trouble flash rate

If the buzzer turns on in response to a non-latching trouble or supervisory, it will turn off if the condition causing it goes away and there is no other reason for it to be on.

AC On LED

The AC On LED illuminates steady green while the main AC power is within acceptable levels. It turns off when the power level falls below the power-fail threshold and the panel switches to standby (battery) power.

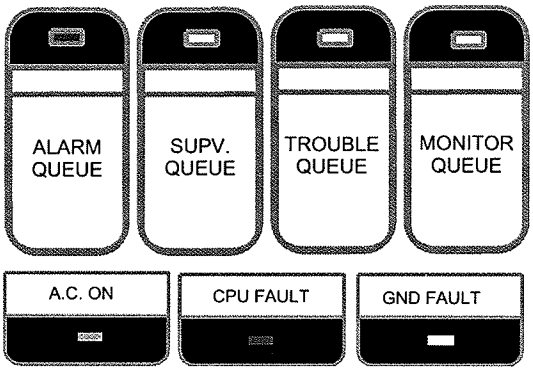

Alarm Queue LED

The Alarm LED flashes red whenever the panel is in alarm. An alarm results from any alarm on any point or input programmed as alarm or activation of the manual red General Alarm button (if the panel is set for two stage operation). The Alarm Queue LED will illuminate steadily once *all* alarms in the queue have been reviewed using the Alarm Queue button. Since all alarms are latched until the panel is reset, the LED will remain on until then.

Supervisory Queue LED

The Supv. (Supervisory) LED flashes amber when there is a supervisory alarm in the panel resulting from any latching or non-latching supervisory circuit. The LED turns off if all non-latching supervisory circuits are restored and there are no active latching supervisory circuits. The Supv. Queue LED will illuminate steadily once *all* supervisory alarms in the supervisory queue have been reviewed using the Supv. Queue button. Latching supervisory alarms remain active until the panel is reset.

Trouble Queue LED

The Trouble LED flashes amber at the trouble flash rate when the panel detects any trouble condition. The LED turns off after all non-latching troubles are cleared. The Trouble Queue LED will illuminate steadily once all troubles in the trouble queue have been reviewed using the Trouble Queue button.

Monitor Queue LED

The Monitor Trouble LED flashes amber at the trouble flash rate when the panel detects any Monitor condition. It turns off after all monitor troubles are cleared.

CPU Fault LED

The CPU Fault LED flashes amber at the trouble flash rate when the main CPU fails.

Ground Fault LED

The Ground Fault LED flashes amber at the trouble flash rate when the Ground Fault Detector detects a ground fault on any field wiring. It turns off after the fault is cleared.

Signal Silence LED

The Signal Silence LED flashes amber at the trouble flash rate after indicating circuits are silenced either by the Signal Silence button, or by the Auto Signal Silence Timer. It turns off after the signals are re-sounded by a subsequent alarm.

Fire Drill LED

The Fire Drill LED turns on steady amber while Fire Drill is active.

General Alarm LED

In two stage operation only, the red General Alarm LED illuminates steadily after the General Alarm button is pressed, or after the Auto General Alarm Timer times out. Once the General Alarm LED turns on, it will stay active until the panel is reset.

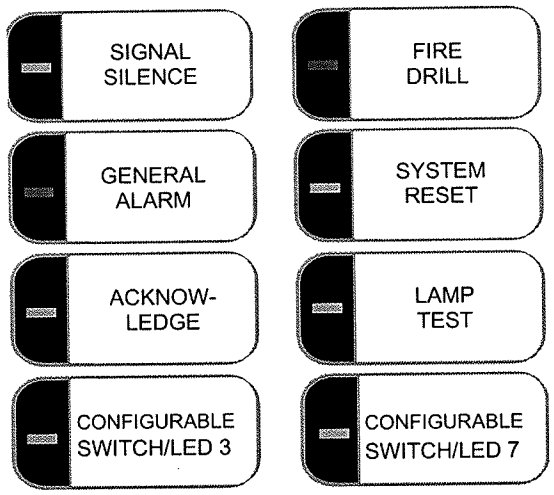

System Reset LED

The amber System Reset LED will illuminate steadily after the system reset button has been pressed and the system is resetting.

Acknowledge LED

If the panel is configured as a two stage system, the Acknowledge LED flashes amber at the fast flash rate while the General Alarm timer is timing. It turns on steady amber after the Auto General Alarm Timer is cancelled by the activation of the Acknowledge or Signal Silence buttons. If the Auto General Alarm Timer times-out and puts the panel into General Alarm, the Acknowledge LED turns off.

Lamp Test LED

The amber Lamp Test LED will illuminate steadily after the Lamp Test button is pressed and while system is in Lamp Test mode.

Configurable LED Indicators

Configurable LED indicators include16 bi-coloured LEDs that are available for alarm, supervisory, and monitor annunciation paired with 16 trouble LEDs available for trouble annunciation.

Common Controls

LCD Display

The display is a large, four line, 20 character back-lit alphanumeric LCD. It displays information regarding the panel, its circuits, and devices. An on-screen cursor is controlled by the cursor buttons (located to the right of the display) for menu selection and control. Report information provided by the LCD display include Alarm Log, Event Log, Current Levels, Verification, and Maintenance reports.

Queue Buttons

Use the queue buttons to select a particular queue to review.

- Use the **Alarm Queue** button to view all alarms. Pressing this button will show the latest alarm on the LCD display. Use △ and ▽ to view all previous alarms.
- Use the **Supervisory Queue** button to view all supervisory conditions. Pressing this button will show the latest supervisory information on the LCD display. Use △ and ▽ to view all previous supervisory conditions on the LCD display.
- Use the **Trouble Queue** button to view all trouble conditions. Pressing this button will show the latest trouble condition on the LCD display. Use △ and ▽ to view any previous troubles.
- Use the **Monitor Queue Button** to show all monitor conditions. Pressing this button will show the latest monitor information on the LCD display. Use △ and ▽ to view all queued monitor conditions.

Queues are displayed on the screen according to a priority sequence. Queue priority ranking from highest to lowest is as follows: alarm, supervisory, trouble, and monitor. If, for example, you are viewing a monitor queue and an alarm occurs, the display will immediately display the alarm condition. Also, if there is no activity on the system for 10 seconds after you have pressed a queue button, the display will switch to the highest priority condition.

Cursor Buttons

Located around the Enter button, the cursor buttons up (previous), down (next), right, and left allow you to select items on the LCD display. The up and down buttons scroll through lists in a continuous loop.

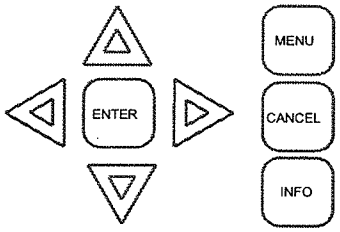

Enter Button

Use this button to select a displayed item on the LCD display.

Cancel Button

Use this button to cancel an operation or exit a menu.

Menu Button

Use this button to view the Command Menu.

Info Button

Push and hold this button to get detailed information about any displayed item.

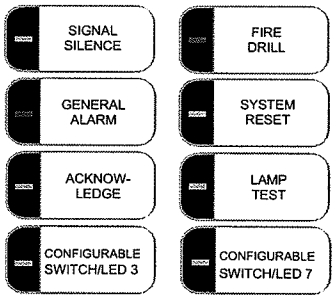

Signal Silence Button

Pressing the Signal Silence button after the panel is in alarm turns on the Signal Silence LED and deactivates any silenceable indicating circuits. Non-silenceable circuits are unaffected. Signals will re-sound upon any subsequent alarm. This button does not function during any configured Signal Silence Inhibit Timer period. It also does not function if indicating circuits are active as the result of a fire drill. In a two stage system, if the Auto General Alarm Timer has not timed out, the Signal Silence button also performs the same function as the Acknowledge button.

Fire Drill Button

The Fire Drill button activates all programmed and non-disconnected indicating circuits, but does not transmit any alarms via the city tie or common alarm relay. The Fire Drill button may be programmed to operate specific indicating circuits. The fire drill is cancelled either by pressing the Fire Drill button again (toggle switch) or if the panel goes into a real alarm.

General Alarm Button (Two Stage Only)

If the panel is *not* configured for two stage operation, this button does nothing. If the panel is configured for two stage operation, activation of the General Alarm button immediately sends the panel into second stage general alarm. It will also re-activate the signals if they have been silenced during general alarm. The general alarm condition remains active until the panel is reset. Silenceable signals can be silenced using the Signal Silence button.

System Reset Button

The System Reset button resets the panel and all circuits:

- •Resets all Latching Trouble Conditions
- •Resets 4-Wire Smoke Supply
- •Turns off Signal Silence, Ack & GA LEDs
- •Stops and resets all Timers
- •Aux Disconnect is not affected
- •Resets all Initiating Circuits
- •Turns off all Indicating Circuits
- •Turns off Fire Drill
- •Processes inputs as new events
- •Reset cannot be activated until the Signal Silence Inhibit timer has expired

ATTENTION: After power-up, press the System Reset button to bring the system to normal.

Acknowledge Button (Two Stage Only)

If the panel is *not* configured for two stage operation, this button could be configured for a different operation. If the panel is configured for two stage operation, activation of the Acknowledge button while the Auto General Alarm Timer is timing (e.g. there is an alarm in the panel but it is still in the first stage) cancels the timer and turns the Acknowledge LED on steady amber.

Lamp Test Button

Pressing and holding the Lamp Test button causes all front panel indicators to illuminate and sounds the buzzer steadily. Bi-coloured LEDs will illuminate twice to show both colors. If lamp test is active for more than ten seconds, the Common Trouble LED activates.

Configurable Switches/LEDs

These two switches and LEDs can be used for any function listed in the FX-2000 Configurator Program. Such functions include Buzzer Silence, Aux. Disc., and Total Evacuation, Bypass, System Inputs, and Fan Control.

Troubleshooting

Message	Description
Unconfigured CPU Trouble	This message appears when additional annunciators or loop adders are physically connected to the panel but are not programmed in the Configurator or are configured for the wrong address.
I/O Adder Mismatch Trouble	This message displays when the hardwired adder modules are in the wrong order or the wrong quantity. If the number of physical hardwired adder modules does not match the number of modules listed in the configuration, the panel will display this message. It will also display this message if the adder modules are not connected.
Display Mismatch Trouble	This message displays when the number of display modules (RAX-1048/TZ, FDX-008, RAX-2096, IPS-2424) connected to the panel do not match the number and the order of display modules listed in the configuration. Make sure the display modules are connected.
Unconfigured Device Trouble	This message displays when an analog device is physically installed but does not appear in the configuration program.
Printer Data Loss Trouble	This message displays when a printer is configured but not physically connected to the panel and a message is sent to the printer. Pressing the System Reset button will clear this trouble.
Slave (RAX-LCDs) Configuration Version Mismatch Trouble	This message displays when the firmware versions on all the CPUs are not compatible.
Slave (RAX-LCDs) Configuration Address Mismatch Trouble	This message displays when the address(es) of the configured slaves does not match.
Slave Configuration Type Mismatch	This message displays if the physical loop adder does not match the loop adder type specified in the configuration program. For example, you will see this message if the physical adder module is an ALC-396 and the specified adder module in the configuration program is an ALC-H16.
Wrong Device Type	This message displays if the type of analog device does not match the type that is listed in the configuration program. For example, you will see this message if an ionization sensor at address 013 is physically connected to the panel but the configuration program has address 013 listed as a photoelectric sensor (or vice versa).
Multiple Unconfigured Device Trouble	This message displays if there are two identical (duplicate) devices at the same address on the same loop.
Data Link Failure	This message displays if the panel cannot communicate with a remote annunciator or an internal CPU on an adder module.
Data Link Trouble	This message displays when the panel has a communication error with a remote annunciator.
Program Version Mismatch (displayed on the RAX-LCD only)	This message displays when the RAX-LCD firmware version is not compatible with the FX-2000 firmware version.
Configuration Data Error (RAM)	This message displays if the system is overloaded and risks resetting itself. Reload the Configurator and/or reboot the system by powering it down and then powering it up.
Configuration Data Error (FLASH)	This message displays if the system is overloaded and risks resetting itself. If this error should occur, please report it to Mircom's Technical Support Department.

Start Up

When the system is plugged in and the batteries are connected, the front display will show:

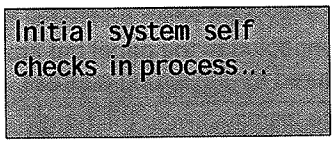

Let the system initialize for approximately 40 seconds to one minute. You will then get a trouble condition, as shown below.

To reset the panel to normal, press the System Reset button. If there is a trouble after you reset the system, then it is a true trouble that should be traced and eliminated.

If there is an alarm, supervisory, trouble, or monitor condition in the system, pressing the appropriate queue button and holding INFO will display information on the cause of the alarm, supervisory, trouble, or monitor device activation.

Note: To display the configuration software version, press MENU, then hold INFO.

Menu Mode

Press the MENU button to activate the menu mode. The menu is broken down as follows:

Menu	Submenu	Description	How to Use
1. Reports	Alarm Log	Print the Alarm Log.	See page 12.
	Event Log	Print the Event Log.	See page 13.
	Current Levels	Print the Current Levels.	See page 14.
	Verif. Count	Print the Verified Count.	See page 15.
	Maint Report	Print the Maintenance Report.	See page 16.
2. Bypass	Device/ Circuit	Bypass/unbypass a Device/Circuit.	See page 18.
	Loop	Bypass/unbypass a Loop.	See page 20.
	Relay disc	Disconnect/reconnect all relays.	See page 21.
3. Walk Test	Audible Test	Perform an audible walktest.	See page 23.
	Silent Test	Perform a silent walktest.	See page 24.
4. Change Passcode	N/A	Change all passcodes.	See page 26.
5. Day/night mode	N/A	Select day or night mode.	See page 27
6. Set time/date	N/A	Set the time and date.	See page 28.
7. Clear Event Log	Alarm Log	Clear the Alarm Log.	See page 29.
	Event Log	Clear the Event Log.	See page 29.
	All Logs	Clear all the logs.	See page 29.
8. Clear Verification Counter	N/A	Clear all verification counters.	See page 30.
9. Auto Program	N/A	Automatically programs the system when a device is added or removed.	See page 31.

Note: If you have used the Configurator to program the "Enable Required" option in the Command Menu, the Command Menu list will appear differently than that which is shown above. Menu option three will read "Enable Required", and "Walk Test" will move to menu option four. All subsequent menu options will similarly be renumbered. For more information on the Enable Required option, see page 25.

Passcodes

Factory Defaults

Passcodes provide three different levels of menu access. These levels are set during configuration and are available on the following features:

- Reports
- Aux. Bypass
- Device Bypass
- Loop Bypass
- Walk Test
- Change Passcode
- Set After Hours
- Set Time/Date
- Clear Event Log
- Clear Verification Count
- Auto Program
- Manual Enable

Note: You can change these access levels via the Configurator.

Changing and entering your passcode

For instructions on how to change and enter passcodes in the system, see page 26.

Front Panel Menu Operation

1. Reports Menu

Use the Reports Menu to print the Alarm Log, Event Log, Current Levels, Verified Counts, and Maintenance reports. You can print to the screen, directly to to a printer connected to the panel, or to your laptop computer (using HyperTerminal).

Note: To print a report to a printer or to a laptop (using HyperTerminal), the printer output must be enabled via the Configurator.

To enter the Reports Menu, you must be in the Command Menu. To enter the Command Menu, press [MENU] when the display is in normal mode.

Step 1: Select the Reports Menu

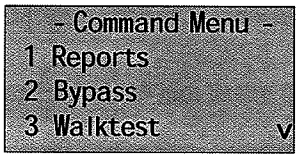

1. Use △ and ▽ to scroll the cursor to "Reports".
2. Press [ENTER] to select the Reports Menu.

Step 2: Enter your passcode (if required)

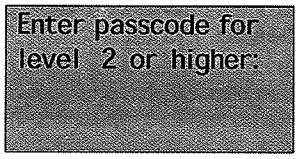

Enter your passcode. *See page 26 for instructions on entering passcodes.*

Step 3: Select the option you would like to view

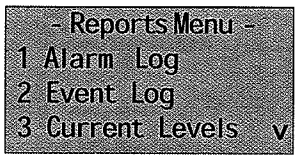

1. Use △ and ▽ to scroll the cursor through the menu.
2. Press [ENTER] to select an option.
3. Press [CANCEL] to exit and return to the Reports Menu. Repeat to exit to the Command Menu.

The following subsections provide instructions on using each Reports Menu option.

Alarm Log

The Alarm Log reports on all alarm events. Alarm events are listed in order of the most recent event to the earliest. The maximum number of recorded alarm log entries is 1000. Once the system reaches 1000 entries, any new entry will cause 500 of the oldest entries to be deleted.

Step 1: Select the Alarm Log

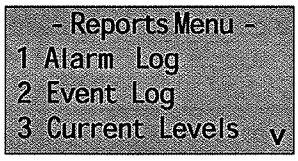

1. Use △ and ▽ to scroll to "Alarm Log".
2. Press ENTER to continue.

At this point the display will vary, depending on whether or not a printer is connected to the panel.

If a printer is not connected to the panel, the Alarm Log will print to the display.

- Use △ and ▽ to scroll the cursor through the log.
- Hold INFO down for more information on the logged event.

Press CANCEL to exit to the Reports Menu.

If a printer is connected to the panel, follow step two, below.

Step 2: Print the Alarm Log

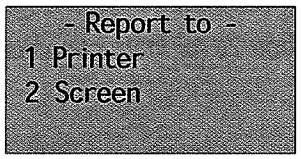

- To print the Alarm Log to the printer, press ENTER when the cursor flashes beside "Printer".
- To print the Alarm Log to the screen, press ▽ then ENTER to select "Screen". Follow the instructions above to navigate the Alarm Log.

Event Log

The Event Log reports on all events: alarms, troubles, and button pushes. Events are listed in order of the latest (most recent) event to the earliest. The maximum number of recorded event log entries is 2000. Once the system reaches 2000 entries, any new entry will cause 1000 of the oldest entries to be deleted.

Step 1: Select the Event Log

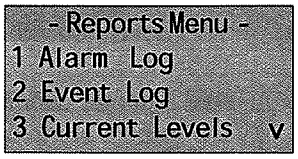

1. Use △ and ▽ to scroll the cursor to "Event Log".
2. Press ENTER to continue.

At this point the display will vary, depending on whether or not a printer is connected to the panel.

If a printer is not connected to the panel, the Event Log will print to the display.

- Use △ and ▽ to scroll the cursor through the log.
- Hold INFO down for more information on the logged event.
- Press CANCEL to exit to the Reports Menu.

If a printer is connected to the panel, follow step two, below.

Step 2: Print the Event Log

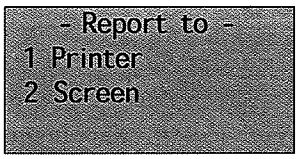

•To print the Alarm Log to the printer, press ENTER when the cursor flashes beside "Printer".

•To print the Alarm Log to the screen, press ▽ then ENTER to select "Screen". Follow the instructions above to navigate the Event Log.

Current Levels

This option reports on the current levels of addressable devices.

Step 1: Select Current Levels

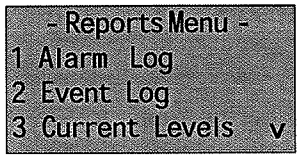

1. Use △ and ▽ to scroll the cursor to "Current Levels".
2. Press [ENTER] to select the Current Levels submenu.

At this point the display will vary, depending on whether or not you have a printer connected.

- **If a printer is not connected to the panel,** skip to step three.
- **If a printer is connected to the panel,** follow steps two and three, below.

Step 2: Print the Current Levels

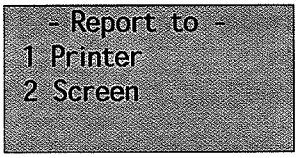

•To print the Current Levels report to the printer, press [ENTER] when the cursor flashes beside "Printer".

•To print the Current Levels report to the screen, press ▽ then [ENTER] to select "Screen". Follow the instructions above to navigate the Current Levels.

Step 3: Select loop number

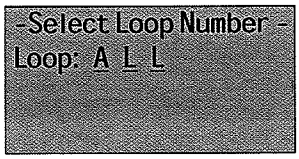

•Select a loop number by using △ and ▽ to scroll through the numbers, or

•Select all loop numbers by pressing [ENTER]. Wait five seconds. Use △ and ▽ to scroll the cursor through the loops.

If you print the Current Levels to the screen,

- Use △ and ▽ to scroll the cursor through the log.
- Press and hold [INFO] for more information on the current level.
- Press [CANCEL] to exit to the Reports Menu.

For example, if you select loop two, the screen will appear as follows:

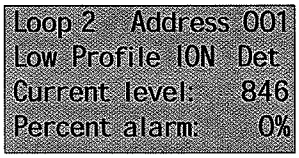

- The first and second lines pinpoint the exact device.
- The **current level** is a point of reference number that is helpful to our technicians.
- The **percent alarm** shows how close the device is to going into alarm: 0% is the least likely, and 80% is the most likely.

Verified Counts

This option reports on any pre-alarmed devices that are set to verification mode. This report lists each time a device pre-alarms. If no devices are set to verification mode, then no report will display.

Step 1: Select Verified Counts

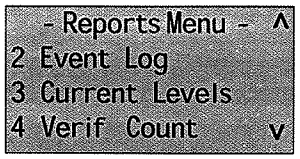

1. Use △ and ▽ to scroll the cursor to "Verif Counts".
2. Press ENTER to continue.

At this point the display will vary, depending on whether or not you have a printer connected.

- **If a printer is not connected to the panel,** skip to step 3.
- **If a printer is connected to the panel,** follow steps 2 and 3, below.

Step 2: Print the Verified Counts

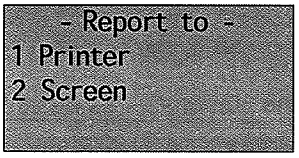

- To print the Verified Counts to the printer, press ENTER when the cursor flashes beside "Printer".
- To print the Verified Counts to the screen, press ▽ then ENTER when the cursor flashes beside "Screen".

Step 3: Select loop number

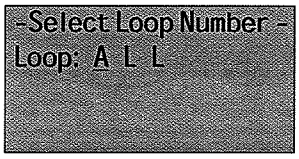

- Select a loop number by using △ and ▽ to scroll through the numbers, or
- Select all loop numbers by pressing ENTER and waiting five seconds. Use △ and ▽ to scroll the cursor through the loops.

Step 4: If the display shows...

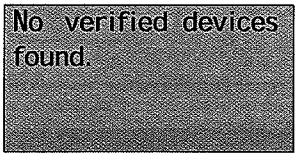

...the display will return to the Reports Menu.

OR

If the display shows...

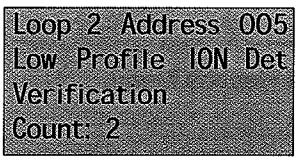

- Press and hold INFO to view the details.
- Use △ and ▽ to scroll the cursor through the records.
- Press CANCEL to exit to the Reports Menu.

Maintenance Report

This option reports on all devices that are greater than 60% of alarm.

Step 1: Select Maintenance Report

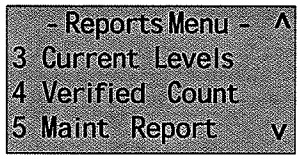

1. Use △ and ▽ to scroll the cursor to "Maint Report".
2. Press ENTER to continue.

At this point the display will vary, depending on whether or not you have a printer connected.

- **If a printer is not connected to the panel,** skip to step 3.
- **If a printer is connected to the panel,** follow steps 2 and 3, below

Step 2: Print the Maintenance Report

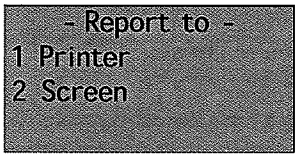

• To print the Maintenance Report to the printer, press ENTER when the cursor flashes beside "Printer".

•To print the Maintenance Report to the screen, press ▽ then ENTER when the cursor flashes beside "Screen".

Step 3: Select loop number

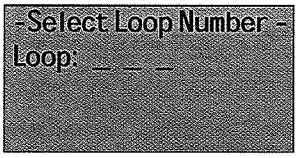

•Select a loop number by using △ and ▽ to scroll through the numbers, or

•Select all loop numbers by pressing ENTER and waiting five seconds.

Step 4: If the screen shows...

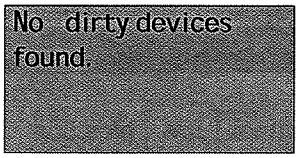

...the display will return to the Reports Menu.

OR

If the display shows...

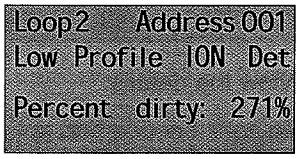

•Press and hold INFO to view the details.

•Use △ and ▽ to scroll the cursor through the records.

•Press CANCEL to exit to the Reports Menu.

2. Bypass Menu

Use the Bypass Menu when you want to bypass or unbypass devices, hardware circuits, complete addressable loops, or outputs such as relays and signals.

To enter the Bypass Menu, you must be in the Command Menu. To enter the Command Menu, press MENU when the display is in normal mode.

Step 1: Select the Bypass Menu

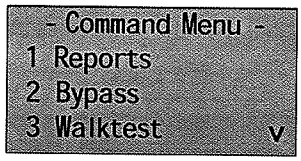

1. Use ▲ and ▼ to scroll the cursor to "Bypass".
2. Press ENTER to select the Bypass Menu.

Step 2: Enter your passcode (if required)

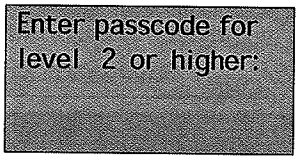

Enter your passcode. *See page 26 for instructions on entering passcodes.*

Step 3: Select the option you would like to view

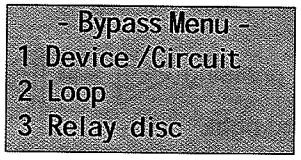

1. Use ▲ and ▼ to scroll the cursor through the Bypass Menu.
2. Press ENTER to select an option.

Press CANCEL to exit and return to the Bypass Menu.

Repeat to exit to the Command Menu.

The following subsections provide instructions on using each Bypass Menu option.

Device/Circuit Bypass

Use this option if you want to bypass or unbypass a device or circuit from the panel. Usually this is done when you need to add, remove, repair, or investigate a device or circuit.

To unbypass the device or circuit, follow the same procedure for device/circuit bypass.

Step 1: Select Device/Circuit

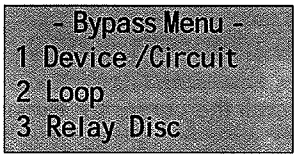

Press ENTER when the cursor is flashing beside "Device/Circuit" to select a device.

Step 2: Enter your passcode

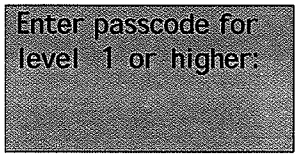

Enter your passcode. *See page 26 for instructions on entering passcodes.*

Step 3: Select a device

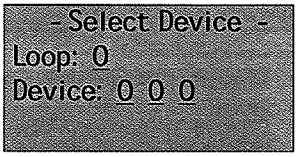

1. Use ▲ and ▼ to select the loop and device number.
2. Enter the loop number, then press ENTER.
3. Enter the device number, pressing ◀ and ▶ as needed to move left and right.
4. Press ENTER to continue.

Step 4: Bypass the device/circuit

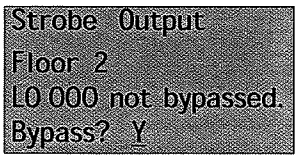

1. The systems now asks you whether or not you would like to bypass or unbypass the device. Use ▲ and ▼ to select "yes" or "no".
2. Press ENTER to continue.

At this point the display will vary, depending on your choice:

- **If you selected "yes",** the system will display the message "Device/Circuit bypassed (unbypassed), then it will return to the Bypass Menu.
- **If you selected "no",** the system will display the message "Operation cancelled", then it will return to the Bypass Menu.

Unbypassing an active device/circuit

When you unbypass a device or circuit that went into alarm while it was bypassed, you will see the following message:

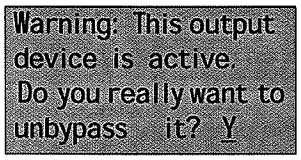

If you select "yes" to unbypass this device, the system will immediately go into alarm. To avoid this problem, press the System Reset button before unbypassing a device or circuit.

Loop Bypass

WARNING: Bypassing a loop will disable all input and output devices in that loop.

Use this option if you want to bypass an entire loop of addressable devices from the panel. Usually this is done during building maintenance.

To unbypass the loop, follow the same procedures for loop bypass.

Step 1: Select Loop Bypass

```
- Bypass Menu -
1 Device /Circuit
2 Loop
3 Relay Disc
```

1. Use △ and ▽ to scroll the to "Loop".
2. Press ENTER to continue.

Step 2: Select a loop number

```
-Select Loop Number -
Loop: 0
```

1. Use △ and ▽ to select the loop number.
2. Press ENTER to continue.

Step 3: Bypass the loop

```
Loop 0 currently
not bypassed
Bypass? Y
```

1. The systems now asks you whether or not you would like to bypass or unbypass the loop. Use △ and ▽ to select "yes" or "no".
2. Press ENTER to continue.

At this point the display will vary, depending on your choice:

- **If you selected "yes"**, the display will either show the message "Loop bypassed" or "Loop unbypassed", then return to the Command Menu.
- **If you selected "no"**, the display will show the message "Operation cancelled" and will then return to the Command Menu.

Unbypassing an active loop

When you unbypass a loop that went into alarm while it was bypassed, you will see the following message:

```
Warning: This loop is
active. Do you really
want to unbypass it? Y
```

If you select "yes" to unbypass this loop, the system will immediately go into alarm. To avoid this problem, press the System Reset button before unbypassing the loop.

Relay Disconnect

This option is useful if you want to disconnect or reconnect the aux relays.

Step 1: Select Relay Disconnect

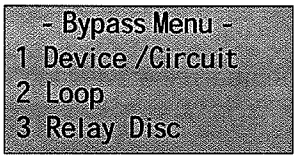

1. Use △ and ▽ to scroll the cursor to "Relay Disc".
2. Press ENTER to continue.

Step 2: Select "yes" or "no"

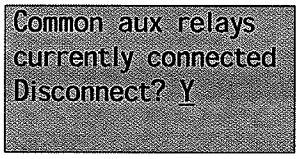

1. The systems now asks you whether or not you would like to bypass the aux relays. Use △ and ▽ to select "yes" or "no".
2. Press ENTER to continue.

At this point the display will vary, depending on your choice:

- **If you selected "yes"**, the display will either show the message "Relays disconnected" or "Relays reconnected", then it will return to the Command Menu.
- **If you selected "no",** the display will show the message "Operation cancelled", then it will return to the Command Menu.

3. Walk Test Menu

Use the Walk Test Menu when you want to test the devices in a system. Performing a walk test will place the system in trouble (non-latching). The Walk test will be aborted if no circuit activations are detected for one hour.

Notes:

- Walk test records that are printed to the screen will be stored in the event log.
- To print the walk test to a printer or to a laptop (using HyperTerminal), the printer output must be enabled via the Configurator.

To enter the Walk Test Menu, you must be in the Command Menu. To enter the Command Menu, press MENU when the display is in normal mode.

Step 1: Select the Walk Test Menu

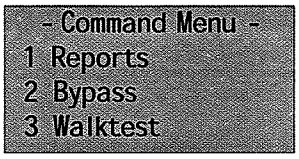

1. Use ▲ and ▼ to scroll the cursor to "Walktest".
2. Press ENTER to select the Walk Test Menu.

Step 2: Enter your passcode (if required)

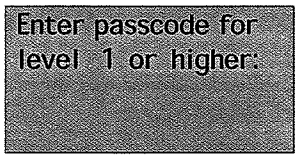

Enter your passcode. *See page 26 for instructions on entering passcodes.*

Step 3: Select the option you would like to view

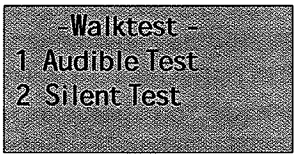

1. Use ▲ and ▼ to scroll the cursor through the menu.
2. Press ENTER to select an option.

Press CANCEL to exit and return to the Walk Test Menu.

Repeat to exit to the Command Menu.

The subsections below provide instructions on using each Walk Test Menu option.

Audible Test

During this test, alarm activation of any input device will activate all signals for one half second. Trouble activation on any input device will activate all signals continuously for one second.

Note: Audible devices connected to an addressable output module will not sound in Audible Test mode.

Step 1: Select Audible Test

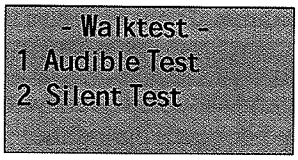

1. Use △ and ▽ to scroll the cursor to "Audible Test".
2. Press [ENTER] when the cursor flashes beside "Audible Test" to select the Audible Test. The test will now begin.

Step 2: View the Walk Test

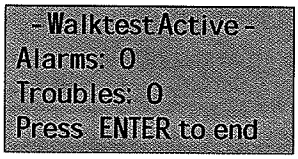

As the test runs, the Alarms and Troubles count will increase as they are recorded (logged) during the Audible Test.

Press [ENTER] to end the walk test.

At this point the display will vary, depending on whether or not a printer is connected to the panel.

If a printer is not connected to the panel, the walk test will print to the display.

- Use △ and ▽ to scroll the cursor through the log.
- Hold [INFO] down for more information on the logged event.

Press [CANCEL] to exit to the normal system display and clear the Walk Test log.

If a printer is connected to the panel, follow step three, below.

Step 3: Print the Walk Test

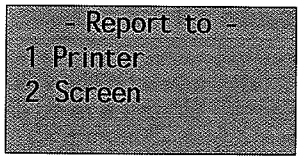

- To print the Walk Test to the printer, press [ENTER] when the cursor flashes beside "Printer".
- To print the walk test to the screen, press ▽ then [ENTER] to select "Screen". Follow the instructions above to navigate the Walk Test log.

Silent Test

During this test, alarm and trouble activation of any input device will be recorded by the system but it will not sound the signals. For the system to register a trouble, you must keep the device in a trouble condition for 10 seconds.

Step 1: Select Silent Test

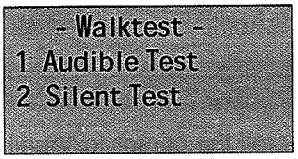

1. Use △ and ▽ to scroll the cursor to "Silent Test".
2. Press [ENTER]. The test will now begin.

Step 2: View the Walk Test

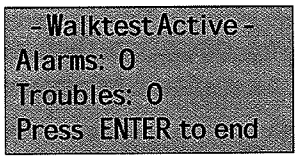

As the test runs, the Alarms and Troubles count will increase as they are recorded (logged) during the Audible Test.

Press [ENTER] to end the Walk Test.

At this point the display will vary, depending on whether or not a printer is connected to the panel.

If a printer is not connected to the panel, the walk test will print to the display.

- Use △ and ▽ to scroll the cursor through the log.
- Hold [INFO] down for more information on the logged event.

Press [CANCEL] to exit to the normal system display and clear the Walk Test log.

If a printer is connected to the panel, follow step three, below.

Step 3: Print the Walk Test

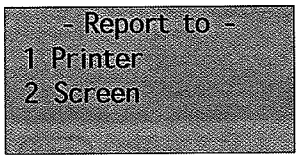

•To print the walk test to the printer, press [ENTER] when the cursor flashes beside "Printer".

•To print the walk test to the screen, press ▽ then [ENTER] to select "Screen". Follow the instructions above to navigate the Walk Test log.

Alternate Menu Option #3: Manual Control Enable

Notes:

- You will see this option in the Command Menu only if your system has been programmed for manual control.
- This feature does not change after a system reset.

This option provides security on the panel control buttons by requiring the user to enter a passcode or activate a key switch before a specific button will operate. This "manual control" feature is set up using the Configurator, and can affect any number of control buttons. Selecting the Enable Required option in the Command Menu or turning the key switch allows you to activate and deativate this feature.

Selecting Manual Control Enable from the Menu

To select the Enable Required option, you must be in the Command Menu. To enter the Command Menu, press [MENU] when the display is in normal mode.

Step 1: Select Manual Enable

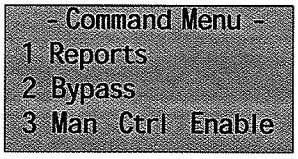

1. Use △ and ▽ to scroll the cursor to "Man Ctrl Enable".
2. Press [ENTER] to continue.

Step 2: Enter your passcode

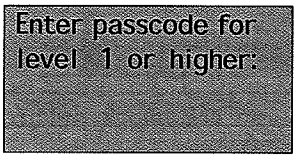

Enter your passcode. *See page 26 for instructions on entering passcodes.*

Step 3: Enable manual control

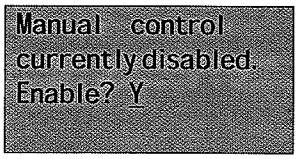

1. The systems now asks you whether or not you would like to enable manual control. Use △ and ▽ to select "yes" or "no".
2. Press [ENTER] to continue.

The display will now show the message "Manual control enabled" while in normal mode, and the panel will be in a trouble condition. To check which annunciator manual control was enabled on, press the [INFO] button. To disable manual control, follow the same steps outlined above.

Selecting manual control enable using a key switch

You can set up the FX-2000 to require the activation of a key switch instead of a passcode to enable manual control. Once the key switch is operated, the display will show the message "Manual control enabled" while in normal mode, and the panel will be in a trouble condition. To check which annunciator manual control was enabled on, press the [INFO] button. To disable manual control, reset the key switch.

4. Change Passcode

Use passcodes to restrict access to specific menu levels. See *Passcodes* page 10 for details.

To enter the Change Passcode option, you must be in the Command Menu. To enter the Command Menu, press [MENU] when the display is in normal mode.

Step 1: Select Change Passcode

```
- Command Menu -
2 Bypass
3 Walktest
4 Change Passcode
```

1. Use △ and ▽ to scroll the cursor to "Change Passcode".
2. Press [ENTER] to continue.

Step 2: Enter your current passcode

```
Enter passcode for
level 1 or higher:
```

Enter the passcode that you would like to change. See below for instructions on entering passcodes.

Step 3: Enter your new passcode

```
Enter new passcode
_ _ _ _ _ _ _ _ _ _
Re-enter passcode
_ _ _ _ _ _ _ _ _ _
```

1. Enter the new passcode.
2. Press [ENTER].
3. Re-enter the passcode for verification.
4. Press [ENTER]. The display now returns to the Command Menu.

Entering passcodes

To enter passcodes, press the

- Alarm Queue button for the number 0
- Supv. Queue button for the number 1
- Trouble Queue button for the number 2
- Monitor Queue button for the number 3

Since there is no number available above three, your passcodes will consist of any combination of zero, one, two, and three (up to 20 digits).

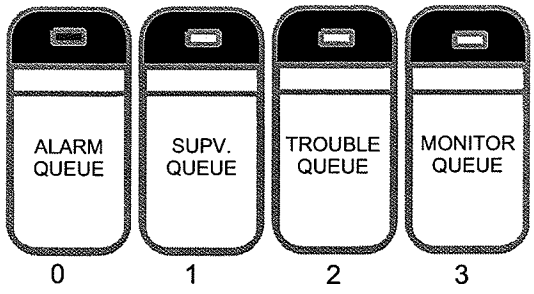

5. Day/Night Mode

Using the Configurator you can program day mode and night mode separately for different system sensitivity levels. Select the Day/Night mode option in the Command Menu if you would like to manually set the Day/Night mode.

To enter the Day/Night Mode option, you must be in the Command Menu. To enter the Command Menu, press MENU when the display is in normal mode.

Step 1: Select Day/Night Mode

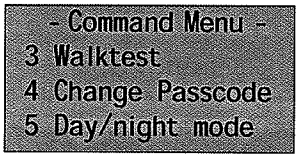

1. Use △ and ▽ to scroll the cursor to "Day/Night mode"
2. Press ENTER to continue.

Step 2: Enter your passcode (if required)

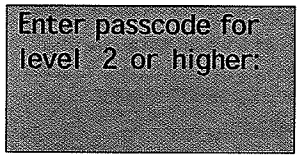

Enter your passcode. *See page 26 for instructions on entering passcodes.*

Step 3: Select "yes" or "no"

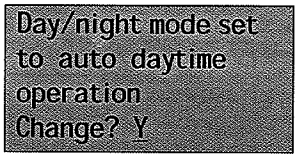

1. Use △ and ▽ to select "yes" or "no".
2. Press ENTER to continue.

At this point the display will vary, depending on your choice:

- **If you selected "yes"**, continue to step 3.
- **If you selected "no"**, the display will show the message "Operation cancelled", and then it will return to the Command Menu.

Step 4: Select Mode

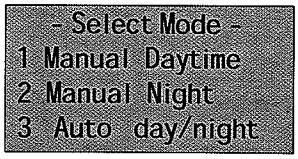

1. Use △ and ▽ to select "Manual Daytime", "Manual Night", or "Auto day/night".
2. Press ENTER to continue. The display will now return to the Command Menu.

Note: The panel will stay in the mode you select until you change it to another mode.

6. Set Time/Date

Note: Select this option if you would like to set the time only.You must use the Configurator to change the date.

To enter the Set Time/Date option, you must be in the Command Menu. To enter the Command Menu, press MENU when the display is in normal mode.

Step 1: Select Set Time/Date

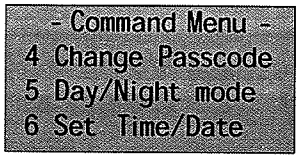

1. Press MENU to select the Command Menu.
2. Use △ and ▽ to scroll the cursor to "Set Time/ Date".
3. Press ENTER when the cursor flashes beside "Set Time/Date" to select the Set Time/Date option.

Step 2: Enter your passcode (if required)

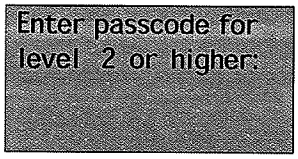

Enter your passcode. *See page 26 for instructions on entering passcodes.*

Step 3: Set the Time

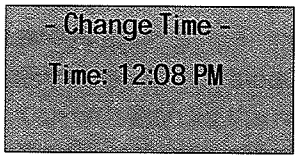

- Use △ and ▽ to change the time.
- Use ◁ and ▷ to move from hours, to minutes, to AM/PM.
- When you are finished, press ENTER to return to the Command Menu.

7. Clear Event Log

Select this option if you would like to clear the Alarm Log, Event Log, or all the logs.

To enter the Clear Event Log option, you must be in the Command Menu. To enter the Command Menu, press MENU when the display is in normal mode.

Step 1: Select Clear Event Log

1. Use △ and ▽ to scroll the cursor to "Clear Event Log".
2. Press ENTER to continue.

Step 2: Enter your passcode (if required)

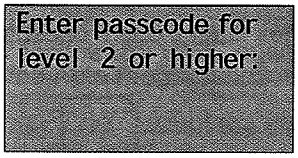

Enter your passcode. *See page 26 for instructions on entering passcodes.*

Step 3: Select the log to clear

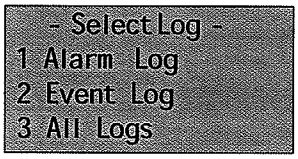

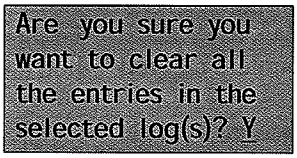

- Use △ and ▽ to select the log you would like to clear.
- Use ◁ and ▷ to select "yes" or "no".
- Press ENTER to continue. The display will now return to the Command Menu.

8. Clear Verification Counter

Select this option if you would like to clear the verification counter.

To enter the Clear Verification Counter Option, you must be in the Command Menu. To enter the Command Menu, press MENU when the display is in normal mode.

Step 1: Select Clear Verification Counter

1. Use ▲ and ▼ to scroll the cursor to "Clear Verification Counter".
2. Press ENTER to continue.

Step 2: Enter your passcode (if required)

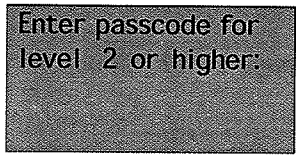

Enter your passcode. *See page 26 for instructions on entering passcodes.*

Step 3: Select "yes" or "no"

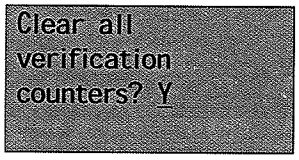

1. Use ▲ and ▼ to select "yes" or "no".
2. Press ENTER to continue.

At this point the display will vary, depending on your choice:

- **If you selected "yes"**, the display shows the message "Counters cleared ", then it will return to the Command Menu.
- **If you selected "no"**, the display shows the message "Operation cancelled", then it will return to the Command Menu.

9. Auto Program

Use Auto Program whenever a device is added or removed without the Configurator. For example, if a new device is added to a loop, the FX-2000 display will show the following while in normal mode:

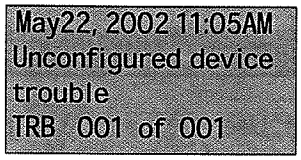

The Auto Program function has specific default settings. For example, a new point defaulted as alarm will have the following settings:

- No LED correlations
- Will activate all signals (common alarm)
- Does not activate any relay outputs
- No device label is attached

Any changes to these default settings must be performed using the Configurator.

To enter the Auto Program option, you must be in the Command Menu. To enter the Command Menu, press MENU when the display is in normal mode.

Step 1: Select Auto Program

1. Use △ and ▽ to scroll the cursor to "Auto Program".
2. Press ENTER to continue.

Step 2: Enter your passcode (if required)

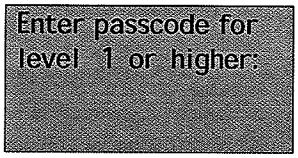

Enter the passcode that you would like to change. *See page 26 for instructions on entering passcodes.*

Step 3: Select "yes" or "no" to auto program

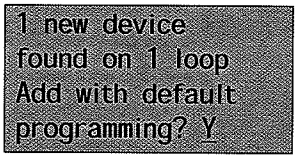

1. Use △ and ▽ to select "yes" or "no".
2. Press ENTER to continue.

At this point the display will vary, depending on your choice:

- **If you selected "yes"**, go to step four.
- **If you selected "no"**, the display shows the message "No changes requested auto program aborted", then it will return to the Command Menu.

Step 4: Select "yes" or "no" accept/decline message

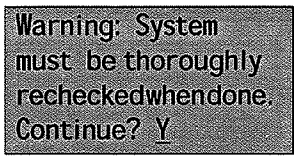

1. Use ▲ and ▼ to select "yes" or "no".
2. Press ENTER to continue.

At this point the display will vary, depending on your choice:

- **If you selected "yes"**, the display shows the message "Auto programming in process ". When the auto programming is completed, the display will return to the normal system display.
- **If you selected "no"**, the display shows the message "No changes requested auto program aborted", then it will return to the Command Menu.

Note: It is strongly recommended that you recheck all devices added through the Auto Program function.

MIRCOM®
Advanced Life Safety Solutions

Canada
25 Interchange Way
Vaughan, ON L4K 5W3
Tel: 905-660-4655 Fax: 905-660-4113

U.S.A.
4220 Steve Reynolds Blvd, Unit 17
Norcross (Atlanta), GA 30093
Tel: 1-888-660-4655 Fax: 1-888-660-4113

© Mircom 2004
Printed in Canada
Subject to change without prior notice

www.mircom.com

Normal: All indicators are normally Off except for the green A.C. light. **Note that the Fire Alarm Control Panel is initially in *Trouble* after power-up until System Reset is pressed.**

Alarm: Operate Alarm Initiating Devices to activate Indicating Appliances. Signals will sound, common alarm & initiating zone indicators will illuminate red.

Silencing of Alarm: Press Signal Silence button momentarily to silence all audible signals. The associated amber indicator will illuminate.

Note: *The signal silencing function may be inhibited for one minute. The Signal silence button will not operate until the inhibit period expired. Refer to the installation manual.*

Auto Alarm Silence: This fire alarm control panel may be set for automatic signal silence.

Note: *Indicating zone (output) may be configured to non-silenceable (steady) signals. Refer to the installation manual.*

Waterflow: Indicating appliances and other output circuits that are activated in response to an alarm initiated by a designated Waterflow Zone can not be silenced (manual or automatic).

Supervisory: Activation of any initiating devices for supervisory will sound the buzzer continuously. Common supervisory and initiating zone indicators will illuminate amber (steady). Common Supervisory and Zone Supervisory indicators remain "on" when the buzzer is silenced.

System Reset: Press the Reset button momentarily to restore normal operation. All alarm indicators will extinguish & *all latched functions are restored.*

Trouble: Any system trouble will sound the buzzer intermittently and Common Trouble indicator will flash amber until the fault is corrected. Refer to the installation manual for troubleshooting guide. Individual amber indicators will flash for any trouble on particular zone(s), and Ground Fault, Battery Trouble, Remote Failure & Test / Config Mode all indicate specific types of trouble. Call for service.

Fire Drill: Press the Fire Drill button momentarily to sound all audible signals without initiating an alarm. Press the button again for normal system operation. **Note:** *Auxiliary relays will not operate when Fire Drill is operated.*

General Alarm: In a System configured for **TWO STAGE OPERATION**, press the General Alarm button momentarily to initiate a general alarm. Signals will sound with the selected Evacuation Tone. To restore to normal operation, Reset the System.

Acknowledge: In a System configured for **TWO STAGE OPERATION**, press the Acknowledge button momentarily; the associated amber indicator will illuminate indicating that the Alarm has been Acknowledged. The signals will remain in the Pre-Alert Stage; and the System will not execute an Automatic General Alarm (evacuation stage). Any subsequent Alarm will restart the Pre-Alert timer period from the beginning until the System enters into the Evacuation Stage. The System can not be Acknowledged once it is in the Evacuation Stage.

Lamp Test: Press the Lamp Test button momentarily to test all indicators. All indicators should be lit and buzzer will sound.

Queue Buttons: These are used to select a particular Queue to review using the cursor buttons and LCD Display.

Cursor Buttons: These four buttons around the **Enter Button** are used for up, down, left, and right selection of items on the LCD Display.

Enter Button: This button is used to select a displayed item on the LCD Display.

Cancel Button: This button is used to cancel an operation.

Menu Button: This button is used to initiate the FX-2000 Menu System.

Info Button: This button is used to get more details about a displayed item.

NOTES: *All indicators should be tested regularly. Manual or Auto Signal Silencing will also cancel the Automatic General Alarm.*

WARNING

THIS UNIT INCLUDES AN ALARM VERIFICATION FEATURE THAT WILL RESULT IN A DELAY OF THE SYSTEM ALARM SIGNAL FROM THE INDICATED CIRCUITS. THE TOTAL DELAY (CONTROL UNIT PLUS SMOKE DETECTORS) SHALL NOT EXCEED 60 SECONDS. NO OTHER SMOKE DETECTOR SHALL BE CONNECTED TO THESE CIRCUITS UNLESS APPROVED BY THE LOCAL AUTHORITY HAVING JURISDICTION.

Circuit (Zone)	Control Unit Delay, Seconds	Smoke Detector	
		Model	Delay, Seconds (1)

(1) Enter Detector Data here; the delay (power-up) (start-up) time marked on the installed Smoke Detector(s), or on their installation wiring diagram(s) is to be used.

BATTERY MAINTENANCE:

The two 12 VDC sealed lead-acid batteries should be replaced after each period of 3 to 5 years of normal service. If the Battery Trouble indicator activates, obtain required service.

SYSTEM SERVICE NOTES:

SYSTEM CONFIGURATION:	(check as appropriate)					
Electrical ratings:	120VAC, 60Hz, 4A or 240VAC, 50Hz, 2A					
Battery Fuse:	20 A					
Signal Silence Inhibit:	❑ None	❑ 1	❑ 2	❑ 3 minutes		
Automatic Sig Silence Period:	❑ None	❑ 5	❑ 10	❑ 15	❑ 20	❑ 30 mins
Manual Signal Silence:	❑ No (disabled)		❑ Yes			
City Tie:	Disconnectable		❑ No	❑ Yes		
Stage Select:	❑ Single Stage			❑ Two Stage		
Waterflow:	❑ No			❑ Yes, Zone# _____		
Pre-alert period (Two Stage):	❑ None	❑ 5	❑ 10	❑ 15	❑ 20	❑ 30 mins
Power Supply:	❑ 6 Amps		❑ 12 Amps maximum			

SYSTEM LIMITATIONS: **(Do not exceed power supply ratings)**

Indicating Zone Output: Terminals are labelled **"IND"** on Main Board or SGM-1004A. 24 VDC unfiltered, Power Limited to 1.7 Amps. max. per Circuit.

Initiating Zone Input: Terminals are labelled **"INI"** on Main Board or DM-1008A. 22 VDC, 3 mA Standby, Power Limited to 50 mA max. (Alarm), 5 mV ripple. **Note:** All Initiating Circuits on the Main Board and DM-1008A's are **Compatibility ID "A".**

Aux. Power Supply: Terminals are labelled **"AUX PWR"**. 24 VDC unfiltered Power limited to 1.7 Amps. max.

4 WireSmokeSupplies: Terminals are labelled **"4-WIRE"**. 22 VDC, Power Limited to 200 mA max., 5 mV ripple

Aux. Relay Contacts: Terminals are labelled **"ALARM, TROUBLE, SUPV, or RLY"** on Main Board or RM-1008. All are Form C, 1 A max., 28 VDC resistive load. Must be connected to a Listed Power Limited Source of Supply.

RS-485 Interface: Terminals are labelled **"RS485"** on Main Board. 5 VDC, Power Limited to 300 mA max.

Polarity Reversal: Terminals are labelled **"POLARITY REVERSAL"** on PR-100. 24 VDC, Power Limited to 8 mA max.

City Tie: Terminals are labelled **"CITY TIE"** on PR-100. 24 VDC, Not Power Limited. 210 mA max. 14 ohm Trip Coil.

Analog Addressable Signalling Line Circuit:

Voltage: 24 VDC (nominal)

Current: 0.65 Amp. maximum (supervisory), 0.085 Amp. maximum (alarm), 0.750 Amp. maximum (short circuit).

Line Resistance: 40 ohms max., 0.5 uF max. line capacitance. (Unshielded twisted pair), Power limited, Supervised.

Manufactured in Canada by:

MIRCOM®
Advanced Life Safety Solutions

Mircom Technologies Limited
25 Interchange Way, Vaughan,
Ontario, Canada L4K 5W3
Tel:(888)660-4655, Fax:(888)660-4113

Local Service Representative:

Name: _____
Company: _____
Address: _____
_____
Telephone: _____

System Model: **SERIES FX-2000**, Fire Alarm Control Panel

System Type: Local, Auxiliary (using PR-100), Remote Protected Premise Station(using DACT-100 or UDACT-100 or PR-100), Central Station Protected Premise (using DACT-100 or UDACT-100).

Type of Service: A, M, WF, SS (SS is only Local, or with DACT-100 or UDACT-100)

Type of Signalling: Non-Coded

Applicable Standards: NFPA 70 and 72, UL-864, ULC S-524, ULC S-527

NP-833 Rev. 2 (Jan 2006) Installation Manual is LT-657 Rev.

A copy of this Instruction is to be framed and placed adjacent to the Fire Alarm Control Panel.

INTELLIGENT LOW PROFILE SENSORS

MANUFACTURER: **MIRCOM**

MODEL #: **MIX-200**

INTELLIGENT LOW PROFILE SENSORS MIX-200 SERIES

Mircom's MIX-200 Series intelligent plug-in smoke detectors with integral communication provide features that surpass conventional detectors. Detector sensitivity is continuously monitored and reported to the FX-2000 Fire Alarm Control Panel. Point ID capability allows each detector's address to be set with decade address switches, providing exact detector locations for selective maintenance when chamber contamination reaches an unacceptable level.

Intelligent Low Profile Ionization Smoke Sensor (MIX-1251B)

The Intelligent Ionization Smoke Sensor is constantly monitored to measure any change in its sensitivity due to the environment (dirt, aging, temperature, humidity, etc.) It can give an advance indication to the FX-2000 analog control panel of the need for maintenance and can be specific as to where the maintenance is needed. It can be mounted in a number of different bases. See the Ordering Information for a list of these bases and their descriptions.

Intelligent Low Profile Photoelectronic Smoke Sensor (MIX- 2251B)

The Intelligent Photoelectronic Smoke Sensor is constantly monitored to measure any change in its sensitivity due to the environment (dirt, aging, temperature, humidity, etc.) It can give an advance indication to the FX-2000 analog control panel of the need for maintenance and can be specific as to where the maintenance is needed. It can be mounted in a number of different bases. See the Ordering Information for a list of these bases and their descriptions.

Intelligent Thermal Sensors (MIX-5251B/MIX-5251RB/MIX-5251H)

The Intelligent Thermal Sensors contain a dual thermistor sensing circuit for fast response. They provide open area protection with 50 foot spacing. The sensors rapid response characteristic virtually eliminates the thermal lag which is characteristic of conventional heat detectors and insures operation as soon as the temperature reaches its set point (MIX-5251B), or upon a temperature rise of 15°F per minute (MIX-5251RB). The MIX-5251H provides fixed high temperature detection at 190°F. These sensors can be mounted in a number of different bases. See the Ordering Information for a list of these bases and their descriptions.

Intelligent Low Profile Photoelectronic Smoke Sensor with Thermal (MIX-2251TB)

The MIX-2251TB has the same features as the MIX-2251B and includes a 135°F thermal sensor. It can be mounted in a number of different bases. See the Ordering Information for a list of these bases and their descriptions.

S6295 *(MIX-1251B, MIX-2251B & MIX-2251TB)*
S6299 *(MIX-5251B/RB/H)*

S6965 *(MIX-1251B, MIX-2251B & MIX-2251TB)*
S7498 *(MIX-5251B/RB/H)*

7271-1477:122 *(MIX-1251B)*
7271-1477:117 *(MIX-2251B/TB)*
7271-1477:114 *(MIX-5251B/RB/H)*

MEA approved
148-03-E *(MIX-1251B)*
219-02-E *(MIX-2251B/TB)*
390-02-E *(MIX-5251B/RB/H)*

MSFM approved
2151 (MIX-1251B)
2131 *(MIX-2251B/TB)*

FM APPROVED
3017996

CATALOG NUMBER 5904

NOT TO BE USED FOR INSTALLATION PURPOSES.

Mircom reserves the right to make changes at any time without notice in prices, colours, materials, components, equipment, specifications and models and also to discontinue models.

Specifications

Height
2.0 inches (51 mm)

Diameter
6.1 inches (155 mm) Installed in B210LP Base
4.1 inches (104 mm) Installed in B501 Base

Shipping Weight
Heat: 4.8 oz. (137 g)
Photo/Photo with Heat: 5.2 oz. (147 g)
Ion: 5.4 oz. (154 g)

Operating Temperature Range
Ion/Photo: 32°F to 120°F (0°C to 49°C)
Photo with Thermal: 32°F to 100°F (0°C to 38°C)
Thermal: -4°F to 100°F (-20°C to 38°C)
High Temperature: -4°F to 100°F (-20°C to 66°C)

UL Listed Velocity Range
Ion: 0 - 1200 fpm (0 - 5.1 m/sec)
Photo/Photo with Thermal: 0 - 4000 fpm (0 - 20 m/sec)

Relative Humidity
10% - 93% noncondensing

Insect Screen Hole Size
Photo: 0.016 inch (0.41mm) nominal
Ion: 0.035 inch (0.89mm) nominal

Thermal Ratings
Fixed Temperature Setpoint: 135°F (57°C)
Rate of Rise Detection: 15°F/min. (8.3°C/min.)
High Temperature: 190°F (88°C)

Voltage Range
15 - 32 volts DC peak

Standby Current
Ion/Thermal:
150 uA @ 24 VDC (without communication, LED off)
200 uA @ 24 VDC (one communication every 5 sec. with LED enabled)

Photo/Photo with Thermal:
250 uA @ 24 VDC (without communication, LED off)
300 uA @ 24 VDC (one communication every 5 sec. with LED enabled)

LED Current (max.)
6.5 mA @ 24 VDC (on)

Note: *Mounting sensors outside of the specified temperature ranges will cause sensor failures and erratic panel operation.*

Ordering Information

Model	Description
Intelligent Addressable Analog Sensors	
MIX-1251B	Intelligent Low Profile Ionization Smoke Sensor
MIX-2251B	Intelligent Low Profile Photoelectronic Smoke Sensor
MIX-2251TB	Intelligent Low Profile Photoelectronic Smoke Sensor c/w 135°F Fixed Temp. Thermal Sensor
MIX-5251B	Intelligent Low Profile Fixed Temp. Thermal Sensor 135°F
MIX-5251RB	Intelligent Low Profile Fixed Temp. and Rate of Rise Thermal Sensor 135°F
MIX-5251H	Intelligent Low Profile High Temperature Thermal Sensor 190°F
Intelligent Analog Bases	
B210LP	Intelligent Flanged Mounting Base
B224BI	Intelligent Isolator Base
B224RB	Intelligent Relay Base*
B501	Intelligent Flangeless Mounting Base
B501BH	Intelligent Sounder Base
B501BHT	Intelligent Temporal Tone Sounder Base
Accessories	
RA-400Z	Remote LED Annunciator

Note: *For Canadian models add suffix "A".*
** When used with the M500X Fault Isolator Module, the number of relay bases between fault isolators is limited to 12.*

NOT TO BE USED FOR INSTALLATION PURPOSES.

MIRCOM®

Canada
25 Interchange Way
Vaughan, Ontario L4K 5W3
Telephone: (905) 660-4655
Fax: (905) 660-4113

U.S.A.
60 Industrial Parkway
Cheektowaga, New York 14227
Toll Free: (888) 660-4655
Fax Toll Free: (888) 660-4113

Web page: http://www.mircom.com Email: mail@mircom.com

Distributed by:

CAT. 5904
Rev. 5

MOUNTING BASES

200 SERIES

Mircom's mounting bases and kits provide a variety of ways to install detectors in any application.

B501 Flangeless Mounting Base

The B501 is standard base with no flange.

B210LP Flanged Mounting Base

The B210LP is a low profile mounting base with a flange.

B224BI Isolator Base

The B224BI Isolator Base allows loops to continue to operate under fault conditions and automatically restore when the fault is removed.

The MIX-200 Series detectors can be mounted in either flanged or flangeless bases depending on the junction box selection.

B501BH Sounder Base

The B501BH Sounder Base provides a built-in sounder which can be used for evacuation purposes.

B224RB Relay Base

The B224RB Relay Base provides one form C relay contact for control of auxiliary functions such as damper control and elevator recall.

CATALOG NUMBER 5906

NOT TO BE USED FOR INSTALLATION PURPOSES.
Mircom reserves the right to make changes at any time without notice in prices, colours, materials, components, equipment, specifications and models and also to discontinue models.

Specifications

Base Specifications

Diameter
4.0" (102 mm);flangeless
6.1" (155 mm);flange

Height
1.2" (31 mm)

Wire Gauge
12 - 22 AWG

Temperature Range
32°F to 120°F (0°C to 49°C)

Humidity Range
10% to 93% RH noncondensing

B224RB/B224BI Electrical Ratings

Operating Voltage
15 to 32 VDC

Standby Ratings
<500 µA maximum @24 VDC

Set Time
4 sec.minimum,20 sec.maximum

Reset Time
1 sec.minimum, 8 sec.maximum

Relay Characteristics (relay base only)
2 coil latching relay
1 Form C contact
Resistive contact rating: 2 A @ 30 VDC
Inductive contact rating:
0.3 A @ 110 VDC (with .35 pF or greater),
0.3 A @ 120 VAC (with .35 pF or greater),
1.0 A @ 30 VDC (with .6 pF or greater)

B501BH/B501BHT Electrical Ratings

External Supply Voltage
17 to 32 VDC

Standby Current
1.0 mA max.

Alarm Current
15 mA max.

Maximum Ripple Voltage
10% of supply voltage

Start-up Capacitance
200 µF

Sound Output
Greater than 90 dBA measured in anechoic room at 10 feet, 24 volts. 85 dBA minimum in UL reverberant room.

200 Series Junction Box Selection Guide

Model	Single Gang	3.5" Oct.	4" Oct.	4" Sq.	4" Sq.*	50 mm	60 mm	70 mm	75 mm
B501	No	Yes	No	No	Yes	Yes	Yes	Yes	No
B210LP	Yes	Yes	Yes	Yes	Yes	No	No	No	No
B224RB	No	Yes	Yes	Yes	No	No	Yes	Yes	Yes
B224BI	No	Yes	Yes	Yes	No	No	No	Yes	Yes
B501BH	No	No	No	Yes	No	No	No	No	No
B501BHT	No	No	No	Yes	No	No	No	No	No

*with 3.0 .mud ring

Note: Box depth contingent on base and wire size. Refer to National Electric Code or applicable local codes for appropriate recommendations.

Recessed Mounting Kit Product Overview

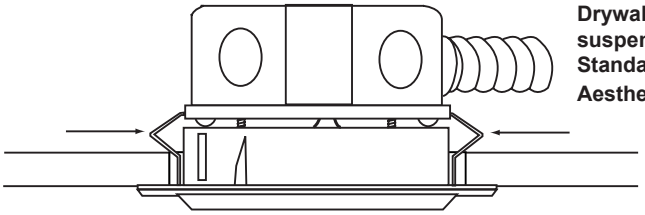

Drywall or suspended ceiling
Standard junction boxes
Aesthetically pleasing

Used with B501,the RMK400 provides a simple installation solution in applications that demand a lower profile smoke detector.
Uses. Kit is suitable for use with 4"octagon, 50mm, and 60mm junction boxes connected to flexible conduit.
Junction boxes are not included in kit.

Note: *Not listed for use with MIX-1251(A).*

Ordering Information

Model	Description	Agency Listing
B501	Flangeless Mounting Base	UL, ULC, FM, CSFM, MEA
B210LP	Flanged Mounting Base	UL, ULC, FM, CSFM, MEA
B501BH	Sounder Base	UL, ULC, CSFM, MEA, SSL
B501BHT	Temporal Tone Sounder Base	UL
B224RB	Relay Base	UL, ULC, CSFM, MEA
B224BI	Isolator Base	UL, ULC, CSFM, FM, MEA
RA400Z	Remote LED Annunciator	

Note: *For Canadian models add suffix "A".*

NOT TO BE USED FOR INSTALLATION PURPOSES.

MIRCOM®

Canada
25 Interchange Way
Vaughan, Ontario L4K 5W3
Telephone: (905) 660-4655
Fax: (905) 660-4113

U.S.A.
60 Industrial Parkway, PMB 278
Cheektowaga, New York 14227
Toll Free: (888) 660-4655
Fax Toll Free: (888) 660-4113

Web page: http://www.mircom.com Email: mail@mircom.com

Distributed by:

CAT. 5906
Rev. 4

METAL FIRE ALARM STATION

MANUFACTURER: **MIRCOM**

MODEL #: **MS-700U**

METAL FIRE ALARM STATION MS-700U SERIES

MS-701U
Single Action Pull Station

MS-710U
Dual Action Pull Station

Features

- Single or Dual Action
- Key resettable
- Terminal connectors
- Gold plated SPST contacts
- Optional auxiliary contacts
- High-gloss red enamel finish
- Plastic breakrod
- Mounts on standard single gang box, Mircom's BB-700 surface metal backbox or BB-700WP weather proof backbox

Description

Mircom's MS-700U Series Manual Pull Stations provide manual fire reporting. These high quality, die-cast metal pull stations are available in either single or dual action configurations with SPST contacts and terminal strip connections. The normally open contact, which closes when the pull station is activated, is rated for 1 amp, 30 VDC. The contacts are gold plated to avoid the risk of corrosion.

The MS-700U Series Pull Stations are available in many different configurations as either single or dual-action devices.

The MS-701U is a single action, single stage pull station. Model MS-710U is a single stage, dual action pull station.

All models are available with key resets, terminal connectors, SPST gold contacts and CAT-30 lock and keys. The units mount on a standard single gang backbox, Mircom's BB-700 surface metal backbox or BB-700WP weather proof backbox.

Operation

The MS-701U Single Action Pull Station is operated by pulling down the handle marked "PULL HANDLE" on the front of the station. The MS-710U Dual Action Pull Station is operated by pushing the bar labelled "PUSH BAR" and then pulling down the handle marked "PULL HANDLE". The MS-700U Series Pull Stations are reset by opening the station with the key, placing the handle in the normal upright position and re-locking the station.

Specifications

The manual pull station shall be Mircom's MS-700U Series. Operating instructions shall be in raised English lettering and the unit shall be constructed of high quality die-cast metal and finished in red enamel paint to provide quick identification. Pulling the handle shall initiate immediate operation of the alarm detection circuit. All manual fire alarm stations shall be installed as per the specific requirements outlined in the UL codes, as well as all other applicable national or local codes. Final acceptance is subject to the local authority having jurisdiction.

S7005 S7005 7150-1477:128

CATALOG NUMBER 5157

NOT TO BE USED FOR INSTALLATION PURPOSES.
Mircom reserves the right to make changes at any time without notice in prices, colours, materials, components, equipment, specifications and models and also to discontinue models.

Specifications

Switch Rating: 1 Amp @ 30 VDC
0.1 Amp @ 125 VAC

Pull Station Dimensions: 4.9” H x 3.5” W x 2.0” D

Color: Red with raised white letters, white pull bar with raised black letters.

Surface Mount Backboxes

BB-700 Surface Mount Backbox

Dimensions:
5” H x 3.6” W x 2.0” D

BB-700WP Weatherproof Surface Mount Backbox

Dimensions:
5” H x 3.6” W x 2.2” D

Typical Wiring Diagrams

MS-701U, MS-702U and MS-710U

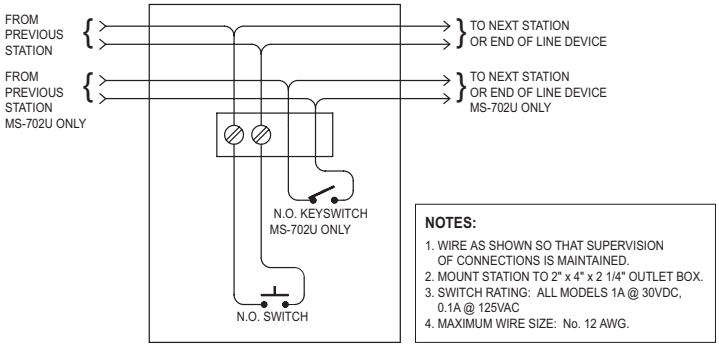

NOTES:
1. WIRE AS SHOWN SO THAT SUPERVISION OF CONNECTIONS IS MAINTAINED.
2. MOUNT STATION TO 2" x 4" x 2 1/4" OUTLET BOX.
3. SWITCH RATING: ALL MODELS 1A @ 30VDC, 0.1A @ 125VAC
4. MAXIMUM WIRE SIZE: No. 12 AWG.

MS-701UP and MS-710UP

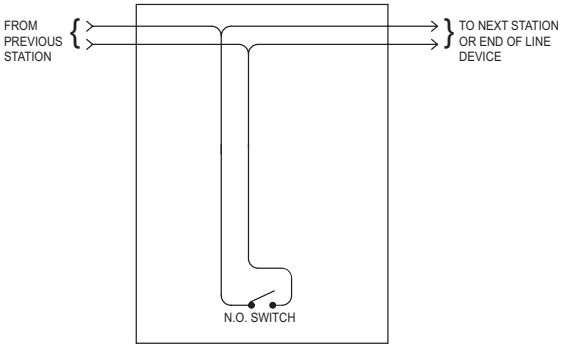

Ordering Information

Model	Description
MS-701U	Single Action Manual Pull Station
MS-702U	Dual Stage Single Action Manual Pull Station
MS-705U	Single Action Manual Pull Station c/w one additional Form “C” (SPDT) Contact
MS-710U	Dual Action Manual Pull Station
MS-715U	Dual Action Manual Pull Station c/w one additional Form “C” (SPDT) Contact
MS-701UP	Single Action Manual Pull Station c/w pig tail leads
MS-710UP	Dual Action Manual Pull Station c/w pig tail leads
MS-701NY	Single Action Manual Pull Station (New York Version)
MS-710NY	Dual Action Manual Pull Station (New York Version)
BB-700	Series 700 Interior Surface Mount Backbox, Red Finish
BB-700WP	Series 700 Weatherproof Surface Mount Backbox, Red Finish

NOT TO BE USED FOR INSTALLATION PURPOSES.

MIRCOM®

Canada
25 Interchange Way
Vaughan, Ontario L4K 5W3
Telephone: (905) 660-4655
Fax: (905) 660-4113

U.S.A.
60 Industrial Parkway
Cheektowaga, New York 14227
Toll Free: (888) 660-4655
Fax Toll Free: (888) 660-4113

Web page: http://www.mircom.com Email: mail@mircom.com

Distributed by:

CAT. 5157
Rev. 2

INTELLIGENT ADDRESSABLE MODULES

MANUFACTURER: **MIRCOM**

MODEL #: **MIX-500**

INTELLIGENT ADDRESSABLE MODULES MIX-500 SERIES

Mircom's intelligent module products are designed to meet a wide range of applications. The monitor and control modules can be used to supervise and activate sounders, strobes, door closers, pull stations, waterflow switches, conventional smoke detectors and more. The modules are addressed with easy-to-use rotary code switches and mount in a standard 4" x 4" x 2 1/8" junction box.

Intelligent Addressable Monitor Module (MIX-M500M)

The Intelligent Addressable Monitor Module (MIX-M500M) provides an address for a group of UL/ULC Listed normally open (N.O.) initiating devices, such as heat detectors, beam smoke detectors, 4-wire smoke detectors, waterflow switches, manual pull stations, etc. wired in a Class A (Style D) or Class B (Style B) initiating circuit. The MIX-M500M has an activated red LED.

Intelligent Addressable Interface Module (MIX-M502M)

The MIX-M502M provides the same features as the MIX-M500M but also allows for the use of multiple, conventional 2-wire smoke detectors in the circuit. This module requires a resettable signal power source. The MIX-M502M internally supervises the seperate power source. The red LED indicates when the module is activated. All two-wire detectors that are monitored must be UL/ULC compatible with the MIX-M502M module.

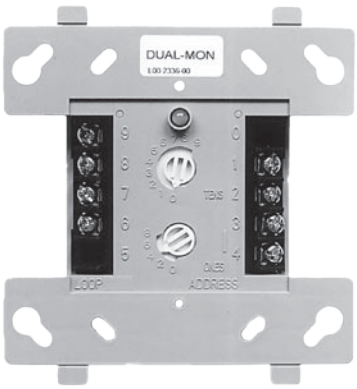

Intelligent Addressable Dual Monitor Module (MIX-M500DM)

The Intelligent Addressable Dual Monitor Module (MIX-M500DM) provides two independent 2-wire initiating device circuits at two separate, consecutive addresses. It is capable of monitoring two separate Class B (Style B) circuits simultaneously, making it ideal for water flow and tamper switch monitoring. The MIX-500DM has a single activated red LED that is common to either circuit.

Intelligent Addressable Mini-Monitor Module (MIX-M501M)

The Intelligent Addressable Mini Monitor Module provides an address for a group of UL/ULC Listed Normally Open (N.O.) initiating devices, such as heat detectors, projected beam smoke detectors, 4-wire smoke detectors, waterflow switches, manual pull stations, etc. wired in a Class B (Style B) initiating circuit.

S5434 S5434

7300-1477:113 *(MIX-M501M, MIX-500R, MIX-500S & MIX-M502M)*
7300-1477:126 *(MIX-M500DM)*
7300-1477:127 *(MIX-M500M)*

MEA approved
427-91-E *(MIX-M500, MIX-M501M)*
87-01-E *(MIX-M500R, MIX-M500S)*
227-03-E *(MIX-M500DM)*

FM APPROVED 3017996

CATALOG NUMBER 5903

NOT TO BE USED FOR INSTALLATION PURPOSES.

Mircom reserves the right to make changes at any time without notice in prices, colours, materials, components, equipment, specifications and models and also to discontinue models.

Intelligent Addressable Supervised Control Module (MIX-M500S)

The MIX-M500S Control module provides supervised monitoring of wiring to signal devices that require an external power supply to operate, such as horns, strobes, bells or speaker isolators. Conventional signals will require a 24 VDC power source and speakers will require an audio input. The MIX-M500S does not supervise the power source. A UL/ULC EOL relay such as the A77-716B(A) is required. The red LED will illuminate when the module is activated. The module is capable of Class A (Style Z) or Class B (Style Y) supervision.

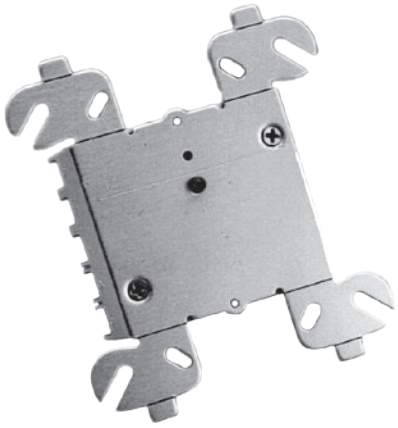

Intelligent Addressable Relay Module (MIX-M500R)

The Intelligent Addressable Relay Module connects to the same loop as the initiating devices and provides two isolated sets of Form-C contacts. The module allows the FX-2000 fire alarm control panel to switch these contacts on command. The MIX-M500R has an activated red LED which follows the state of the relay contacts.

Fault Isolator Module (M500X)

The M500X Fault Isolator Module is used to protect the system against wire-to-wire short circuits on the analog loop. The modules should be spaced between groups of sensors or modules in a loop to protect the rest of the loop. In the event of a short circuit between any two fault isolator modules, both modules immediately switch to an open circuit condition and isolate any group of sensors between them. The remaining units on the circuit will continue to operate in a normal fashion (must be wired in Class 'A' or Style 6). A maximum load of 25 devices can be connected to an isolator to insure that the isolator powers up correctly.

Typical Wiring Diagrams

MIX-M500M Typical 2-wire initiating circuit configuration, Class B (NFPA Style B)

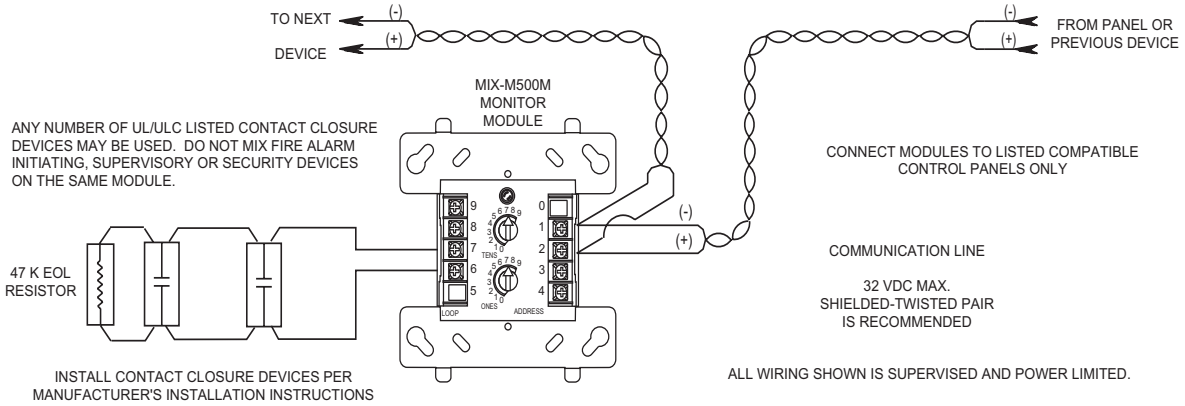

MIX-M502M Interface two-wire conventional detectors, Class B (NFPA Style B)

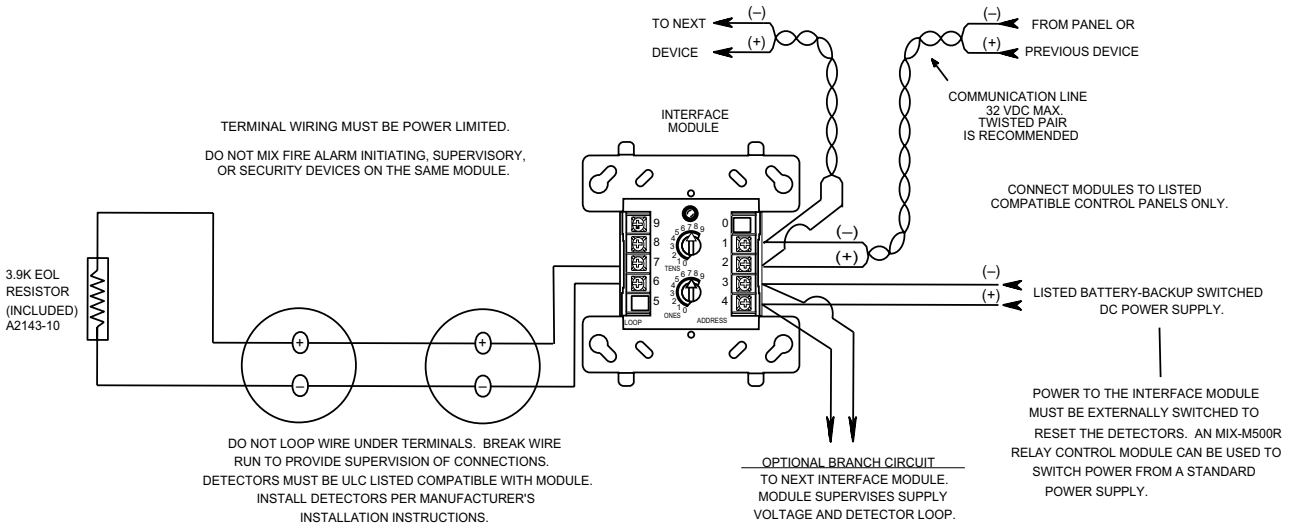

MIX-M500DM Typical 2-wire initiating circuit configuration, Class B (NFPA Style B)

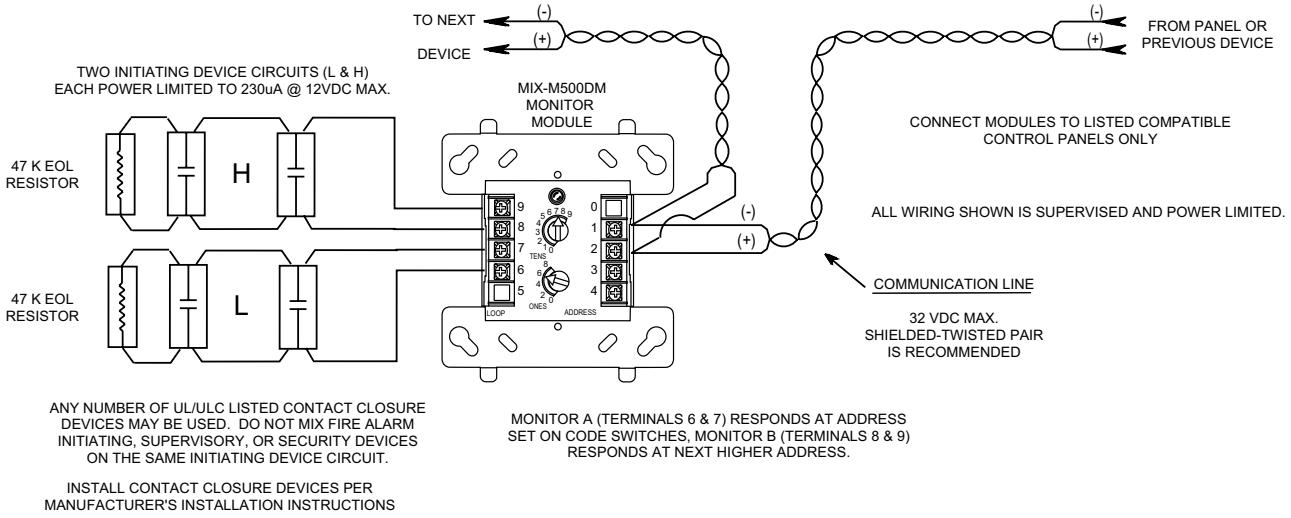

MIX-M500S Typical indicating circuit configuration, Class B (NFPA Style Y)

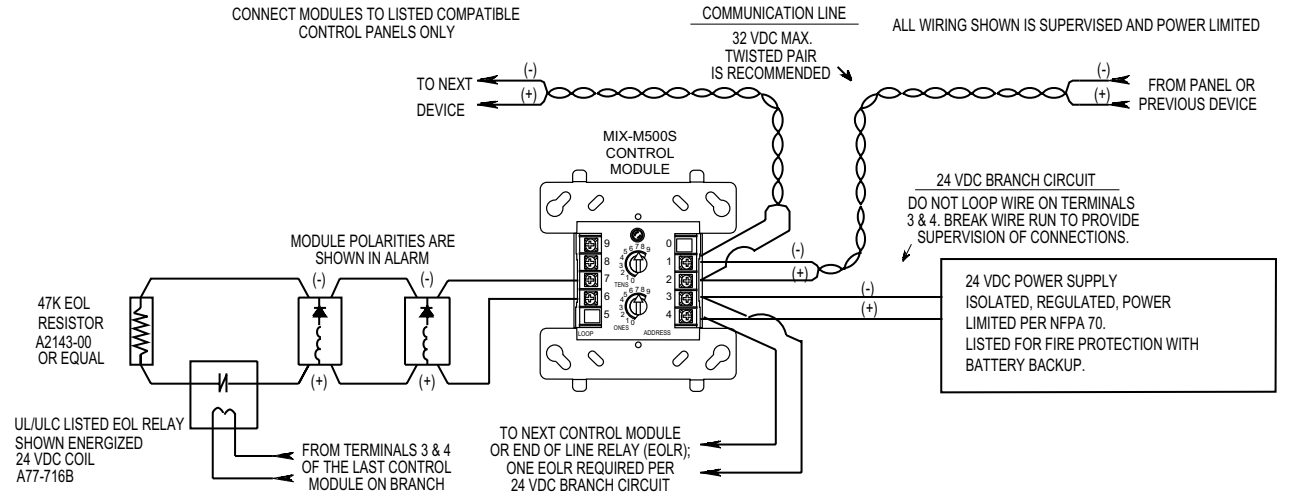

MIX-M500R Typical Relay Module Configuration

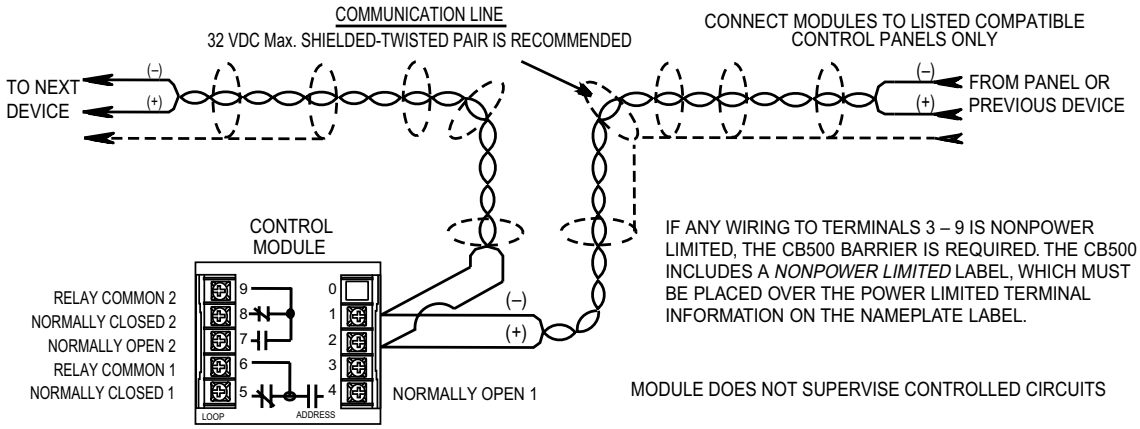

General Specifications

Operating Voltage
15-32 VDC
Communication Line Loop Impedance
40 .max.
Temperature Range
32° to 120°F (0° to 49°C)
Relative Humidity
10% to 93%: noncondensing
Dimensions
MIX-M501M: 1.7"H x 2.7"W x 0.5"D
Others: 4.65"H x 4.25"W x 1.1"D
Shipping Weight
M501M: 1.2 oz (37g)
Others: 6.3 oz (196g)

MIX-M500M, MIX-M500S, MIX-M501M Specifications:

Standby Current
400 µA max @ 24 VDC (one communication every 5 sec. with 47k EOL)
550 µA max @ 24 VDC (one communication every 5 sec. with EOL<1k)
5.5 mA (with LED latched on)
End-of-Line Resistance
47 k (included)

MIX-M502M Specifications:

Standby Current
300 µA max @ 24 VDC (one communication every 5 sec. with LED enabled)
External Power Supply
18-28 VDC (100 mV ripple max.)
End-of-Line Resistance
3.9 k (included)
External Supply Standby Current
11.5 mA @ 24 VDC (nominal)
External Supply Alarm Current
80 mA @ 24 VDC (nominal)

MIX-M500DM Specifications:

Standby Current
750 µA max. @ 24 VDC (one communication every 5 sec. with 47k EOL)
Alarm Current
970 µA max. (one communication every 5 sec.)
6 mA (with LED latched on)
End-of-Line Resistance
47 k (two included)

MIX-M500R Specifications:

Standby Current
300 µA @ 24 VDC (one communication every 5 sec. with LED enabled)
LED Current
5.5 mA (with LED latched on)
Relay Contact Ratings
3.0 A @ 30 VDC resistive
0.9 A @ 110 VDC resistive
0.9 A @ 125 VAC resistive
0.5 A @ 125 VAC inductive (PF=.35)
0.7 A @ 75 VAC inductive (PF=.35)

M500X Specifications:

Standby Current
450 µA max
Isolation Current
5 mA max
Fault Detection Delay
250 ms min.
Fault Detection Threshold
4 Volts
Line Restoration Threshold
7 Volts

Note: *Mounting modules outside of the specified temperature range may cause module failure and erratic panel operation.*

Ordering Information

MIX-M500M	Intelligent Addressable Monitor Module
MIX-M501M	Intelligent Addressable Mini-Monitor Module
MIX-M502M	Intelligent Addressable Interface Module
MIX-500DM	Intelligent Dual Monitor Module
MIX-M500S	Intelligent Addressable Supervised Control Module
MIX-M500R	Intelligent Addressable Relay Module
M500X	Fault Isolator Module

Note: *For Canadian models add suffix "A".*

NOT TO BE USED FOR INSTALLATION PURPOSES.

MIRCOM®

Canada
25 Interchange Way
Vaughan, Ontario L4K 5W3
Telephone: (905) 660-4655
Fax: (905) 660-4113

U.S.A.
60 Industrial Parkway
Cheektowaga, New York 14227
Toll Free: (888) 660-4655
Fax Toll Free: (888) 660-4113

Web page: http://www.mircom.com Email: mail@mircom.com

Distributed by:

CAT. 5903
Rev. 4

SELECT-A-STROBE SERIES
VISUAL SIGNAL

MANUFACTURER: **MIRCOM**

MODEL #: **FS-240**

SELECT-A-STROBE SERIES

FS-240

Description

Mircom's Select-A-Strobe Series is designed to comply with the Americans with Disability Act (ADA) and meet UL standard 1971 requirements for emergency signaling devices for the hearing impaired.

The Select-A-Strobe FS-240 series features a unique candela intensity field selector switch for alternating the candela output 15cd to 30cd (75cd on axis). The strobe housing is clearly labeled with vertical "FIRE" lettering. The strobe is polarized for connecting to supervised fire alarm circuits. The strobe is also designed with a xenon flashtube and provides a candela intensity field selector switch for maximum performance.

The FS-240 series can be synchronized by using the SDM-240 Sync Module to comply with NFPA recommendations concerning photosensitive epilepsy when installing 2 or more visual appliances within the field of view. The strobe signals are listed for indoor use, wall mount, under UL 1971 standard.

Engineering Specifications

The visual alarm indicating appliance shall be model FS-240 or equivalent device. The Strobe shall be listed under UL 1971 Standard for signaling devices for the hearing impaired and shall be approved for fire protective service. For outdoor applications and in UL NEMA 4X rated or UL Haz Dust Tight conditions, use UL/ULC ESH-1229/1229HTR polycarbonate covers. The candela output shall be field selectable, having a dual setting of 15cd or 30cd output. The signaling Strobe shall operate on 24VDC from a non-coded regulated DC supply or full-wave rectified, unfiltered supply. The Strobe shall be designed to produce one signal flash per second with continuously applied minimum voltage. The Strobe shall have a universal back mounting plate, capable of WALL mounting to a back box. When strobe synchronization is required, the Strobe shall be compatible with the SDM-240 (daisy chain) or other source of sync protocol. Visual signaling devices shall be installed in accordance with current NFPA guideline.

Features

- Meets or exceeds NFPA/ANSI Standards and ADA Accessibility Guidelines
- UL listed for wall mounting
- Screw terminal capacity up to 12 AWG
- Universal mounting plate included
- 24V DC strobe with two field selectable settings: 15cd, 30cd
- Polarized strobes with wide operating voltage range using filtered DC or unfiltered FWR input voltage
- Mounts to 4" square, single gang, double gang or octagonal back box
- Tamper-proof candela selector switch
- Synchronization requires Sync Module (SDM-240)
- Available in red or white housing

UL Required Minimum Light Output (cd)

Degrees	Wall Mount Horizontal		Wall Mount Vertical	
	@ 15 cd	@ 30 cd	@ 15 cd	@ 30 cd
0	75.00	75.00	75.00	75.00
5 ~ 25	13.50	27.00	13.50	27.00
30	11.25	22.50	13.50	27.00
35	11.25	22.50	9.75	19.50
40	11.25	22.50	6.90	13.80
45	11.25	22.50	5.10	10.20
50	8.25	16.50	4.05	8.10
55	6.75	13.50	3.30	6.60
60	6.00	12.00	2.70	5.40
65	5.25	10.50	2.40	4.50
70	5.25	10.50	2.25	4.50
75	4.50	9.00	1.95	3.90
80	4.50	9.00	1.95	3.90
85 ~ 90	3.75	7.50	1.80	3.60
Compound 45	3.60	7.20	-	-

Specifications

Strobe Light	Max. RMS Operating Current (mA)	
	Regulated 24V DC	Regulated 24V FWR
15cd	83	120
30cd	128	175

Under ULC 525/526	ULC Current @ 24VDC (mA)
15cd	99
30cd	129

MEA approved

ADA

CATALOG NUMBER 5211

NOT TO BE USED FOR INSTALLATION PURPOSES.
Mircom reserves the right to make changes at any time without notice in prices, colours, materials, components, equipment, specifications and models and also to discontinue models.

Light Output Distribution

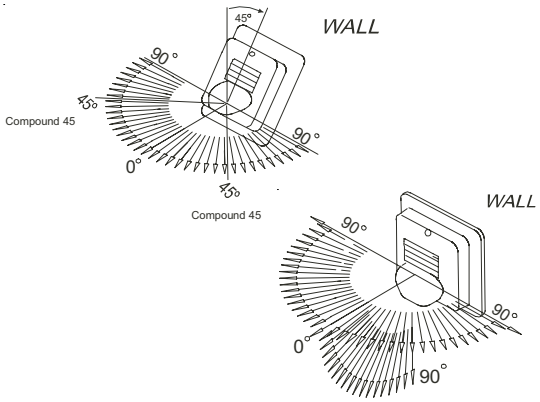

Sound Output Dispersion (dB)

Degrees	Wall Mount Horizontal	Wall Mount Vertical
+90	-6 dB	-3 dB
+60	-2 dB	-2 dB
+30	-1 dB	-1 dB
0	0 dB	0 dB
-30	-1 dB	-3 dB
-60	-2 dB	-5 dB
-90	-6 dB	-6 dB

Warning

- Strobes must be used only on circuits with continuously operating voltage. DO NOT use strobe on coded or interrupted circuits in which the applied voltage is interrupted ON and OFF as the strobe may fail to flash.
- The applied voltage must be within its rated input voltage range.
- Fuse ratings on signaling circuits must handle peak currents from all devices connected to those circuits.

Wiring Diagram

Wiring 1

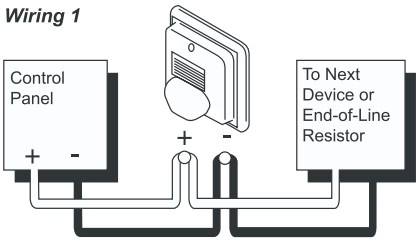

Wiring 2

Wiring Diagram using the Sync Module

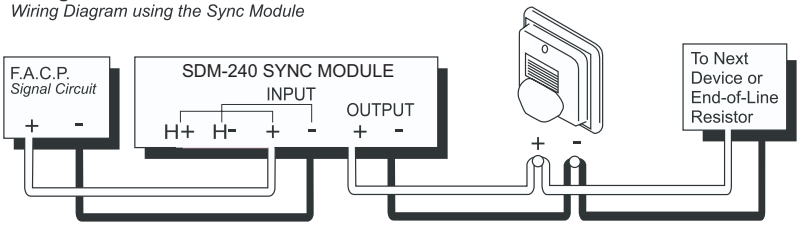

Mounting Options & Dimensions

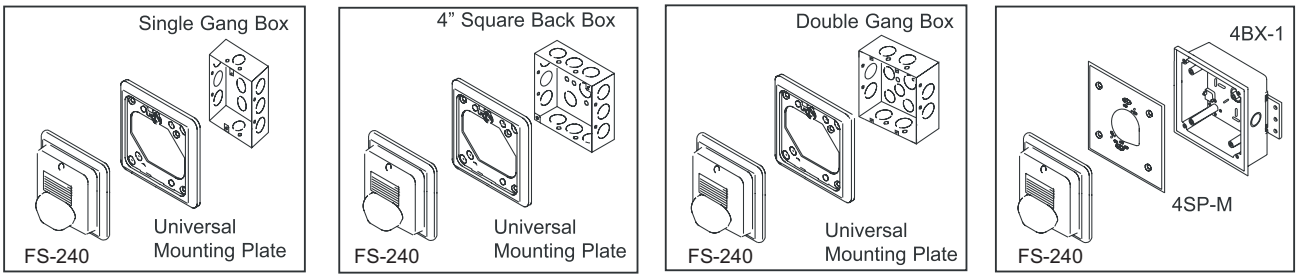

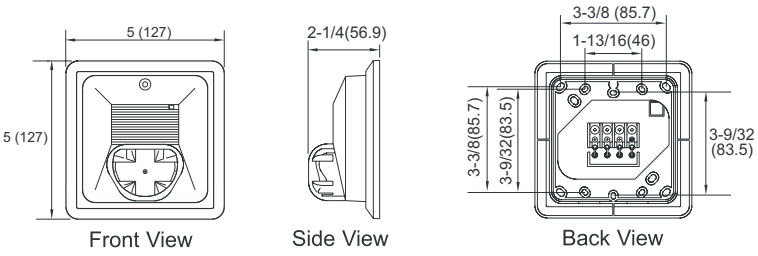

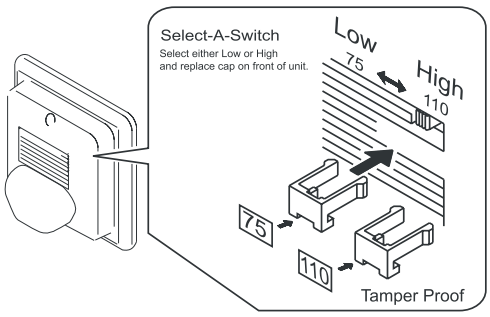

Ordering Information

Model Number	Housing Color	Input Voltage	Operating Voltage Range	Selectable Strobe Output (cd)	Flash Rate	Wiring Type	Mounting Type	Sync Module	Temperature Operating Range
FS-240R	Red	Regulated 24V DC/FWR	16 ~ 33VDC 16 ~ 33VFWR	15 or 30	60 times/ min	Terminals	Wall Mount	SDM-240	32ºF ~ 120ºF (0ºC~49ºC)
FS-240W	White								

NOT TO BE USED FOR INSTALLATION PURPOSES.

MIRCOM®

Canada
25 Interchange Way
Vaughan, Ontario L4K 5W3
Telephone: (905) 660-4655
Fax: (905) 660-4113

U.S.A.
60 Industrial Parkway
Cheektowaga, New York 14227
Toll Free: (888) 660-4655
Fax Toll Free: (888) 660-4113

Web page: http://www.mircom.com Email: mail@mircom.com

Distributed by:

SELECT-A-HORN / STROBE SERIES
AUDIBLE SIGNAL

MANUFACTURER: **MIRCOM**

MODEL #: **FS-240R110/FHS-240W110**

SELECT-A-HORN/STROBE SERIES FHS-240R110/FHS-240W110

Description

Mircom's Select-A-Strobe/HornSeries is designed to comply with the Americans with Disability Act (ADA) and meet UL standard 1971 requirements for emergency signaling devices for the hearing impaired.

The Select-A-Strobe/Horn FHS-240-110 series features a unique candela intensity field selector switch for alternating the candela output 75cd to 110cd. The Horn provides two different field selectable tones, and a High/Low output setting that can be achieved with the use of mini jumpers located on back of the unit. These appliances are polarized for connecting to supervised fire alarm circuits. The strobe is designed with a xenon flashtube and provides a candela intensity field selector switch for maximum performance.

The FHS-240-110 can be synchronized by using the SDM-240 Sync Module to comply with NFPA recommendations concerning photosensitive epilepsy when installing 2 or more visual appliances within the field of view. The strobe signals are listed for indoor use, wall mount, under UL1971 standard.

Engineering Specifications

The audible and visual alarm indicating appliance shall be model FHS-240-110 or equivalent device. The Strobe shall be listed under UL1971 Standard for signaling devices for the hearing impaired and shall be approved for fire protective service. The candela output shall be field selectable, having a dual setting of 75cd or 110cd output.

Features

- Meets or exceeds NFPA/ANSI Standards and ADA Accessibility Guidelines
- UL listed for wall mounting
- Screw terminal capacity up to AWG#12
- Universal mounting plate included
- 24V DC strobe with two field selectable settings: 75cd, 110cd
- Polarized strobes with wide operating voltage range using filtered DC or unfiltered FWR input voltage
- Horn field selectable tones
  - 3000 Hz interrupted or Electro-mechanical
  - Temporal or Non-temporal
  - High or Low dBA output
- Mounts to 4" square, single gang, double gang or octagonal back box
- Tamper-proof candela selector switch
- Synchronization requires Sync Module (SDM-240)
- Available in red or white housing

The Horn shall provide two different field selectable temporal or steady tones, and a High and Low field selectable sound output setting. The signaling strobe shall operate on 24VDC from a non-coded regulated DC supply or full-wave rectified, unfiltered supply.

The horn may operate on 24VDC coded system. The strobe shall be designed to produce one signal flash per second with continuously applied minimum voltage. The Strobe/Horn shall have a universal back mounting plate, capable of WALL mounting to a back box.

When strobe synchronization is required, the Strobe/Horn shall be compatible with the SDM-240 (daisy chain) or other source of sync protocol. Audible and visual signaling devices shall be installed in accordance with current NFPA guideline.

MEA approved

ADA

CATALOG NUMBER 5226

NOT TO BE USED FOR INSTALLATION PURPOSES.
Mircom reserves the right to make changes at any time without notice in prices, colours, materials, components, equipment, specifications and models and also to discontinue models.

Dimensions

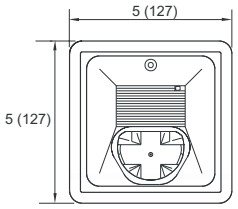

Front View

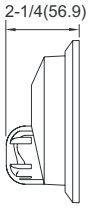

Side View

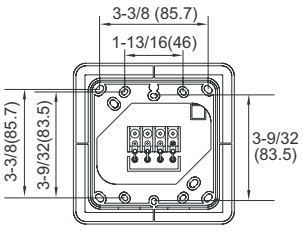

Back View

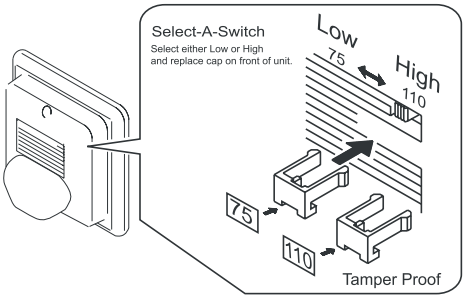

UL Required Minimum Light Output (cd)

Degrees	Wall Mount Horizontal		Wall Mount Vertical	
	@ 75 cd	@ 110 cd	@ 75 cd	@110 cd
0	75.00	75.00	75.00	75.00
5 ~ 25	67.50	99.00	67.50	99.00
30	56.25	82.50	67.50	99.00
35	56.25	82.50	48.75	71.50
40	56.25	82.50	34.50	50.60
45	56.25	82.50	25.50	37.40
50	41.25	60.50	20.25	29.70
55	33.75	49.50	16.50	24.20
60	30.00	44.00	13.50	19.80
65	26.25	38.50	12.00	17.60
70	26.25	38.50	11.25	16.50
75	22.50	33.00	9.75	14.30
80	22.50	33.00	9.00	13.20
85 ~ 90	18.75	27.50	9.00	13.20
Compoud 45	18.00	26.40	-	-

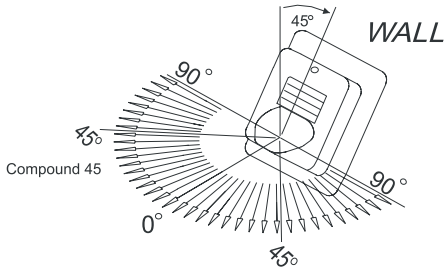

Compound 45

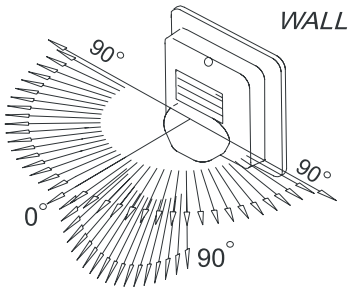

Wiring Diagrams

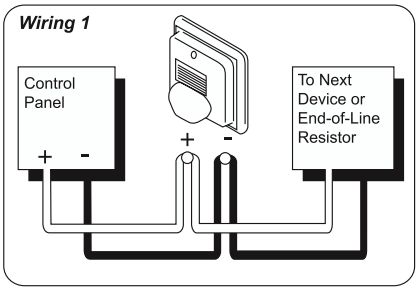

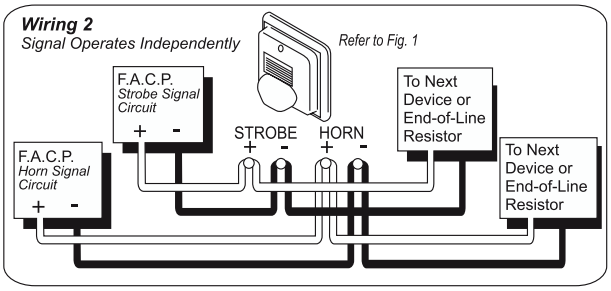

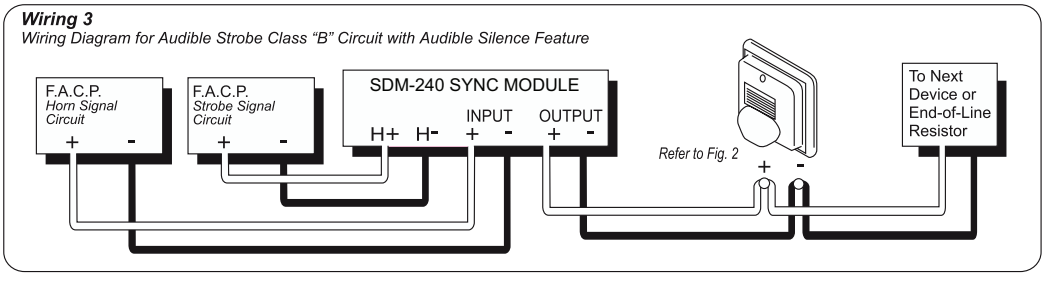

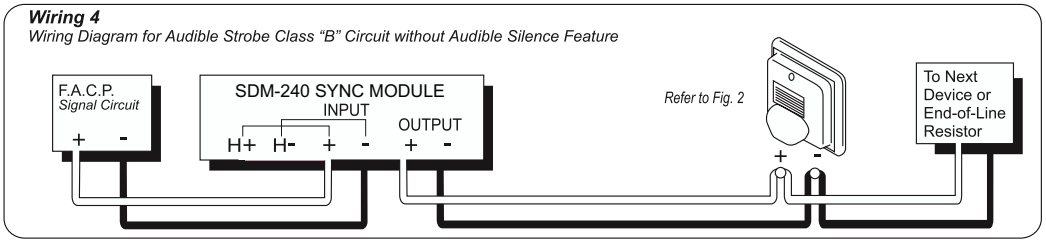

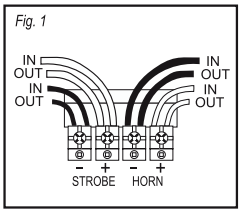

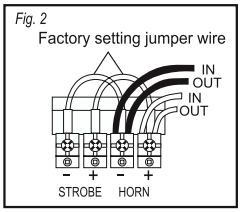

Specifications

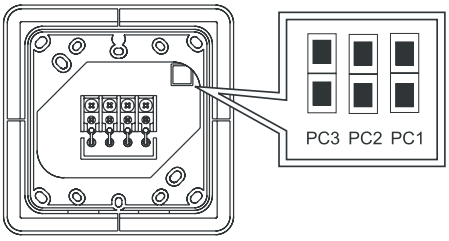

Back of FHS-240

Jumper	PC3 Pattern	PC2 Tone	PC1 Volume
	Non-Temporal	Electro-Mechanical	High
	Temporal	3000 Hz	Low

Strobe/Horn Current Draw Table				PC3: Pattern PC2: Tone PC1: Volume			Max. RMS Operating Current (mA)		Min. Sound Output (dBA @ 10ft per UL464)
				PC3	PC2	PC1	Regulated 24V DC	Regulated 24V FWR	Regulated 24V DC
Horn & Strobe (Low)	Non-Temp	Electro-Mechanical	High	1	1	1	161	206	83
			Low	1	1	0	158	203	74
		3000 Hz	High	1	0	1	167	214	84
			Low	1	0	0	155	200	74
	Temporal	Electro-Mechanical	High	0	1	1	161	206	79
			Low	0	1	0	158	203	69
		3000 Hz	High	0	0	1	167	214	80
			Low	0	0	0	155	200	70
Horn & Strobe (High)	Non-Temp	Electro-Mechanical	High	1	1	1	213	271	83
			Low	1	1	0	210	268	74
		3000 Hz	High	1	0	1	219	279	84
			Low	1	0	0	207	265	74
	Temporal	Electro-Mechanical	High	0	1	1	213	271	79
			Low	0	1	0	210	268	69
		3000 Hz	High	0	0	1	219	279	80
			Low	0	0	0	207	265	70
Horn Only	Non-Temp	Electro-Mechanical	High	1	1	1	57	91	83
			Low	1	1	0	42	44	74
		3000 Hz	High	1	0	1	70	68	84
			Low	1	0	0	36	38	74
	Temporal	Electro-Mechanical	High	0	1	1	57	91	79
			Low	0	1	0	42	44	69
		3000 Hz	High	0	0	1	70	68	80
			Low	0	0	0	36	38	70

Strobe Light Only	Max. RMS Operating Current (mA)	
	Regulated 24V DC	Regulated 24V FWR
75cd	143	198
110cd	198	266

Under ULC 525/526	ULC Current @ 24VDC (mA)	
	Low Volume	High Volume
75cd	111	130
110cd	138	157

Sound Output Dispersion

Degrees	Wall Mount Horizontal	Wall Mount Vertical
+90	-6 dB	-3 dB
+60	-2 dB	-2 dB
+30	-1 dB	-1 dB
0	0dB	0 dB
-30	-1 dB	-3 dB
-60	-2 dB	-5 dB
-90	-6 dB	-6 dB

Installation Options

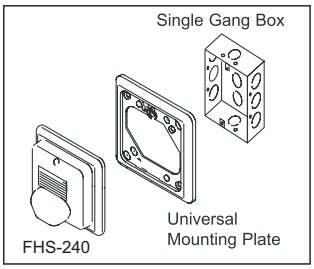

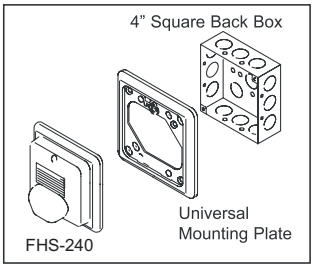

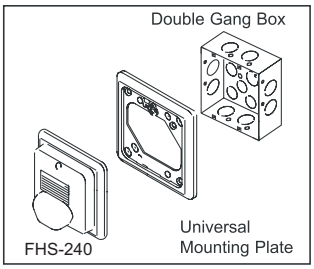

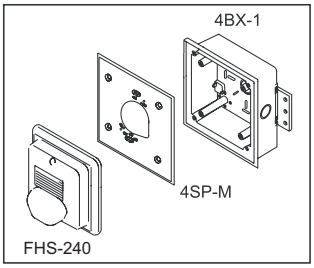

Warning

- Strobes must be used only on circuits with continuously operating voltage. DO NOT use strobe on coded or interrupted circuits in which the applied voltage is interrupted ON and OFF as the strobe may fail to flash.
- The applied voltage must be within its rated input voltage range.
- Fuse ratings on signaling circuits must handle peak currents from all devices connected to those circuits.

SDM-240 Sync Module

Features

- Polarized with wide operating voltage range using filtered DC or unfiltered FWR input voltage
- Mounts onto 4-inch square back box
- Daisy chain up to 20 modules maximum
- Screw terminal capacity up to AWG#12
- Red metal plate

Dimensions

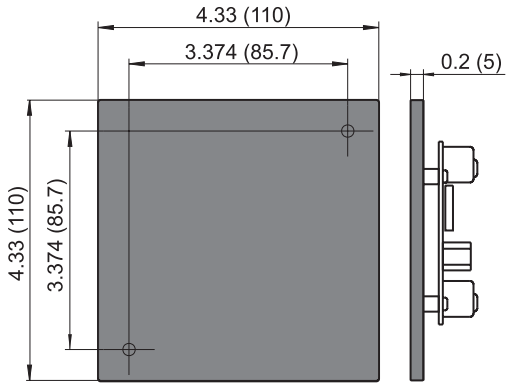

Description

The Sync Module is designed to provide a synchroized temporal pattern (code 3) tone, and synchronized the strobe flashes when used with the Select-A-Strobe/Horn series as well as the ability to silence the horn while maintaining the strobe flashes.

The SDM-240 has the capability of connectign two style Y (Class B) circuits or one style Z (Class A) circuit and is rated for 3 amperes per circuit.

The SDM-240 can be interconnected so that more than two alarm zones can be synchronized when connected using the SYNC terminals (daisy chain connection). The maximum number of interconnected modules is 20. All inputs are polarized for compatibility with standard reverse polarity supervision of circuit wiring, when used with FACP.

Daisy Chain Modules

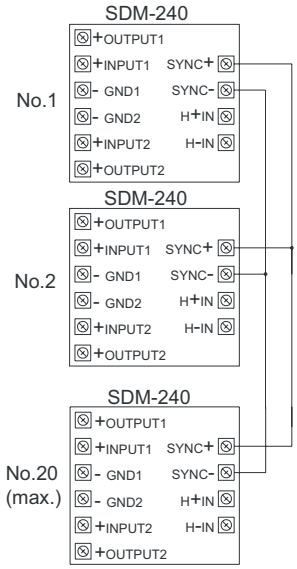

Specifications

Input Voltage		Regulated 24V DC/FWR
Operating Voltage Range		16 ~ 33V DC/FWR
Maximum Load on Loop		3A Average Max. 5A Peak
Max. RMS Operating Current	**DC**	34mA
	FWR	68mA
Mouting Backbox		4" x 4" x 1½"
Operating Temperature Range		32ºF ~ 120ºF (0ºC ~ 49ºC)

Ordering Information

Model Number	Housing Color	Input Voltage	Operating Voltage Range	Selectable Strobe Output (cd)	Horn Sound Output	Wiring Type	Mounting Type	Sync Module	Temperature Operating Range
FHS-240R110	Red	Regulated 24V DC/FWR	16 ~ 33VDC 16 ~ 33VFWR	75 or 110	Selectable	Terminals	Wall Mount	SDM-240	32ºF ~ 120ºF (0ºC~49ºC)
FHS-240W110	White								

NOT TO BE USED FOR INSTALLATION PURPOSES.

MIRCOM®

Canada
25 Interchange Way
Vaughan, Ontario L4K 5W3
Telephone: (905) 660-4655
Fax: (905) 660-4113

U.S.A.
60 Industrial Parkway
Cheektowaga, New York 14227
Toll Free: (888) 660-4655
Fax Toll Free: (888) 660-4113

Web page: http://www.mircom.com Email: mail@mircom.com

Distributed by:

DRAWING

GENERAL FIRE ALARM NOTES

1) BUILDING CLASSIFICATION "U" (for tanks and towers)

2) FOR SYSTEMS WITH AUTOMATIC DETECTION OR SPRINKLERS, AT LEAST ONE MANUAL STATION SHALL BE PROVIDED TO INITIATE A FIRE ALARM SIGNAL. ('99 NFPA 72 SECTION 3-8.3.1.2)

3) IN AREAS NOT CONTINUOUSLY OCCUPIED, AUTOMATIC SMOKE DETECTION SHALL BE PROVIDED FOR EACH FIRE CONTROL PANEL ('99 NFPA 72 SECTION 1-5.6)

4) POWER CIRCUITS TO FACP AND ADDITIONAL POWER SUPPLIES SHALL BE 110VAC MARKED, LOCKED AND DEDICATED CIRCUITS WITH OVERCURRENT PROTECTION ('99 NFPA 72 SECTIONS 1-5.2.5.2, 1-5.2.5.3 & 1-5.2.8.1)

5) WHERE METAL BOXES OR CONDUIT BODIES ARE INSTALLED WITH OPEN WIRING OR CONCEALED KNOB-AND-TUBE WIRING, CONDUCTORS SHALL ENTER THROUGH INSULATING BUSHINGS.

6) FIRE ALARM INITIATING DEVICE ADDRESSES AND NOTIFICATION APPLIANCE CIRCUIT NUMBERS PER INSTALLATION DRAWINGS ARE TO COMPLY WITH: '99 NFPA 72 CHAPTERS 2 & 3.

7) FIRE ALARM CABLE SHALL BE STAMPED, UL LISTED, SOLID COPPER, TWISTED, JACKETED, TWO(2) CONDUCTOR #14 AWG FPL WIRE UNLESS NOTED. [TYPICAL] (2002 NEC ARTICLE 760-71)

8) INITIATING DEVICE CIRCUITS (CONVENTIONAL) SHALL BE WIRED STYLE "D" (CLASS A). ('99 NFPA 72, TABLE 3-5; UFC '97 STANDARD 10-2: TABLE 3.5.1)

9) NOTIFICATION APPLIANCE CIRCUITS TO BE WIRED STYLE "Y" (CLASS B). ('99 NFPA 72 TABLE 3-7; UFC '97 STANDARD 10-2: TABLE 3.7.1)

10) VISUAL DEVICES SHALL BE ADA APROVED (75 CANDELA FRONTAL OUTPUT) & UL 1971 LISTED FOR NON-SLEEPING AREAS (15/75 CANDELA) UNLESS NOTED. (CABO/ANSI A117.1 SECTION 4.26.3.2.3 AND TABLES 4.26.3.2.1 OR 4.26.3.2.2) [TYPICAL]

11) ALL VISUAL SIGNALING APPLIANCES SHALL HAVE A SYNCHRONIZED FLASH RATE. (1999 NFPA 72, SECTION A-4-4.4.1.1 AND A-4-4.4.2.2) [TYPICAL]

12) ALL CONDUIT SHALL BE MINIMUM 3/4" UNLESS NOTED.

13) ROOMS LABELED PER USE AND/OR ROOM NUMBER.

14) PROVISION FOR CONNECTION TO A DIALER FOR CUSTOMER SUPPLIED MONITORING. (WHERE REQUIRED BY AHJ)

15) TAMPER VALVE SHALL BE SUPERVISORY SIGNAL ONLY AND WATER FLOW ALARM SHALL BE NON-SILENCEABLE. ('99 NFPA 72 SECTION 2-9.1.1 & 2-6.2)

16) OUTPUT FROM ELEVATOR SMOKE DETECTORS TO BE ROUTED TO ELEVATOR MECHANICAL ROOM TO ACTUATE FIREMAN'S PHASE 1 SERVICE. (ANSI A17.1 & '99 NFPA 72 SECTION 3-9.3.2)

17) DUCT DETECTORS AND MECHANICAL ROOM SMOKE DETECTORS SHALL BE ARRANGED TO SHUT DOWN FANS AND CLOSE SMOKE DAMPERS (WHERE NEEDED) IN ALARM. ('99 NFPA 90A CHAPTER 4 AND '99 NFPA 72 SECT. 10-2)

18) ACTIVATION OF DUCT SMOKE DETECTORS SHALL INITIATE A SUPERVISORY ALARM ONLY (NOT GENERAL ALARM) IN ACCORDANCE WITH 1999 NFPA 90A, SECTION 4-4.4.2

19) WHERE REQUIRED BY AHJ, ACTIVATION OF FIRE ALARM SYSTEM WILL SHUNT ALL EXTERIOR PUBLIC ADDRESS SYSTEMS TO AVOID INTERFERENCE WITH NOTIFICATION DEVICES.

20) DOOR LOCKING/UNLOCKING/HOLDING DEVICES SHALL FUNCTION IN ACCORDANCE WITH 1999 NFPA 72, SECTION 3-9.7

21) WHERE EXACT DIMENSIONS ARE NOT CALLED-OUT, THE SCALE OF THESE DRAWINGS IS SUFFICIENTLY ACCURATE TO DETERMINE DEVICE LOCATIONS. WHERE LOCATIONS ARE CRITICAL, CONSULT ARCHITECT OR CONTRACTOR. ROOM DIMENSIONS (WHERE USED) HAVE BEEN DERIVED FROM SITE MEASUREMENTS OR ARCHITECTURAL DOCUMENTS. HOWEVER, THIS IS NOT AN ARCHITECTURAL DRAWING. REFER TO ARCHITECTURAL DRAWINGS FOR BUILDING DIMENSIONS.

22) INSTALLATION TO BE IN ACCORDANCE WITH 2002 NEC ARTICLE 760, 2002 NFPA 72, 2000 NFPA 101, ~~UFC (97' or~~ 2000, '92 CABO/ANSI A117.1 AND THE CITY OF ROCKWALL, TX.

STATE OF TEXAS — JAMES E. ZOLLINGER JR. — 66347 — REGISTERED PROFESSIONAL ENGINEER — 5/15/08

2006 IFC

"comply w/ 2002 NFPA 72"

ELEVATOR CONTROLS OPERATIONS

Initiation of a recall will send the car to the designated floor, open the doors and wait there until reset via a key switch located in the elevator lobby.

1) Elevator recall to "primary floor" (1st floor) is caused by any of the following devices triggering the system alarm: smoke detectors in the 2nd or 3rd floor lobby or the top of the elevator hoistway.
2) Elevator recall to "alternate floor" (2nd floor) is caused by any of the following devices triggering the system alarm: smoke detectors in the 1st floor lobby or the mechanical room.
3) Elevator "shunt trip" (if required) is activated by any of the following devices triggering the system alarm: heat detectors in the top or bottom of the elevator hoistway or in the mechanical room.

NOTE: Shunt trip activation will immediately stop the elevator, even if it is between floors.

SLC Riser Diagram

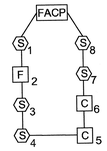

NAC Riser Diagram

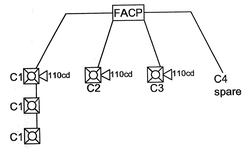

Per job specifications section 4.12.B.2
" The Elevator Recall Fire Alarm System shall be designed in accordance with NFPA 72-2002 Section A.6.15.3.2. The system is not intended to be designed as a protected premis (local) fire alarm system. The building has an occupant load of less than 100 and the building is not sprinkler protected."

LEGEND

FACP	FIRE ALARM CONTROL PANEL	
F	PULL STATION	1900 with Single Gang Ring @ 48"
S	SMOKE DETECTOR	4" Octagonal Box @ Ceiling
C	CONTROL MODULE	1900 Deep @ 60"
	HORN / STROBE	1900 DEEP @ 80" A.F.F.
	STROBE ONLY	1900 DEEP @ 80" A.F.F.

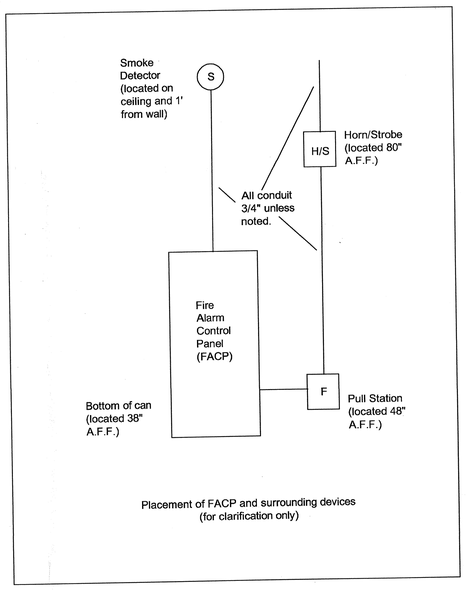

Placement of FACP and surrounding devices (for clarification only)

Per Specifications:
A module will be installed to monitor the PLC system.
(location and device address to be determined on site)

Acceptance Test shall be witnessed by the Rockwall Fire Department Contact 972-771-7774

Plans reviewed approved by the Rockwall Fire Prevention Division give authorization for construction and/or operation. Final approvals are subject to **field verification. Any approval issued** by the Fire Prevention Division does not release **the contractor or property owner** from the responsibility of full compliance **with all applicable codes and ordinances** relating to the construction project. **See our Development Handbook to ensure** full compliance. Any deviation from the **approved plans requires a re-submittal** to the Fire Prevention Division. All fire department inspection **forms and permits** shall be kept in a permit packet on the job site **until final inspection.**

Reviewed By _____ Date: 5/15/08

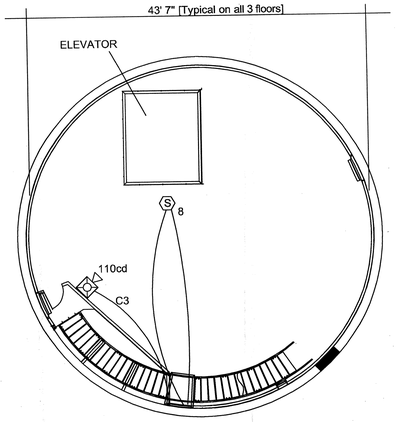

Third Floor

DRAWING SCALE 1/8" = 1'

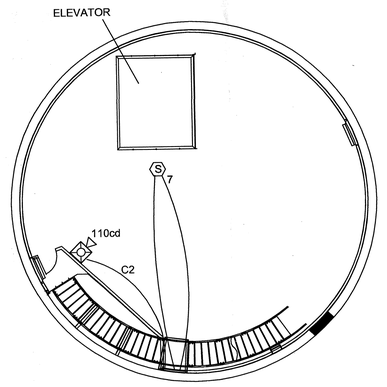

Second Floor

DRAWING SCALE 1/8" = 1'

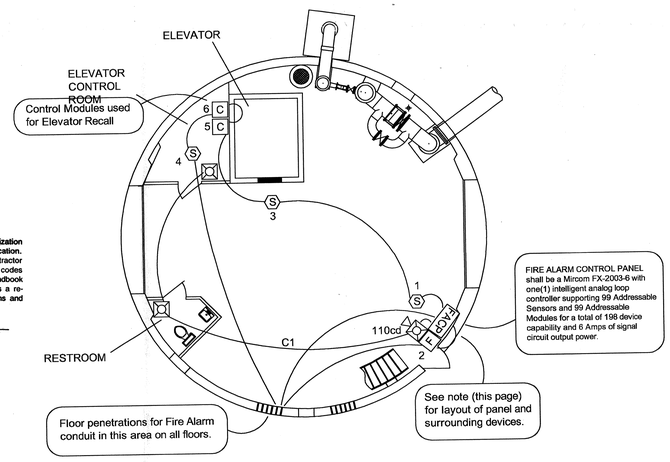

First Floor

DRAWING SCALE 1/8" = 1'

STATE OF TEXAS — JAMES E. ZOLLINGER JR. — 66347 — REGISTERED PROFESSIONAL ENGINEER — 5/15/08

INSTALLATION COMPANY:
ATC SYSTEMS
2407-A MINNIS DR.
HALTOM CITY, TX 76117
LICENSE # ACR-1056
INSTALLATION BY:
JAMES E. ZOLLINGER JR.
LICENSE # FAL-5081

Elevated Water Tank

Rockwall Texas

DATE
3-13-08

PAGE
1 OF 1

SCADA

TABLE OF CONTENTS:

A. MODICON MOMENTUM PROCESSOR
B. ELECTRICAL COMPONENTS
C. UPS
D. ANTENNA, RADIO AND MODEM
E. DRAWINGS

SUBCONTRACTOR / SUPPLIER
HARRELL & ASSOCIATES, INC.
CONTACT: DAVE HARRELL
POST OFFICE BOX 43068
FORT WORTH, TEXAS 76140
(817) 483-7582

TABLE OF CONTENTS

Modicon Momentum Processor

Modicon Momentum Processor	171 CCC 760 10
Modicon Momentum IO Base, 4 AO 4-20mA	170 AAO 921 00
Modicon Momentum IO Base, 24VDC, 16 DO, 16 DI	170 ADM 350 10
Modicon Momentum IO Base, 8 AI, 4-20mA	170 AAI 030 00

Electrical Components

Hoffman Enclosure, 36 X 30 X 8, Stainless Steel	CSD363008SS6
Conta-Connect Ground Terminal	1212.2
Conta-Connect Terminals	1001.2
Conta-Connect Fused Terminals	2190.2
Finder 120 VAC Relay	40.52.8.120
Finder Relay Base	95.85.3
Square-D Breaker, 10A, 1 Pole	QOU110

UPS

APC UPS, 650VA	BE650R
Surge Control 120 VAC Surge Suppressor	SPP-1201
Meanwell Power Supply, 120VAC to 12 VDC, 2A	S-25-12
Meanwell Power Supply, 120VAC to 24VDC, 2.5A	S-60-24

Antenna, Radio and Modem

Bluewave YAGI 890-960 dBd W/ 15-FT Leads NM	BMY890G3015N1
Kimark Data Radio, Frequency Hopping	SCH1000
Zoom Data Fax Modem	2949

Drawings

MODICON MOMENTUM PROCESSOR

171 CCC 760 10

Overview

This section describes the 171 CCC 760 10 Processor Adapter, including key features, a illustration and specifications.

Key Features

The key features of this Processor Adapter are:

- Modbus Port 1
- I/OBus port
- 512K bytes of internal memory
- 32 MHz clock speed

Note: The Modbus port connector looks like a Ethernet port connector. Do not attempt to use an Modbus adapter as an Ethernet unit. Do not attempt to place an Ethernet connector in a Modbus connector.

Illustration

The connectors and LED indicators are shown in the following illustration:

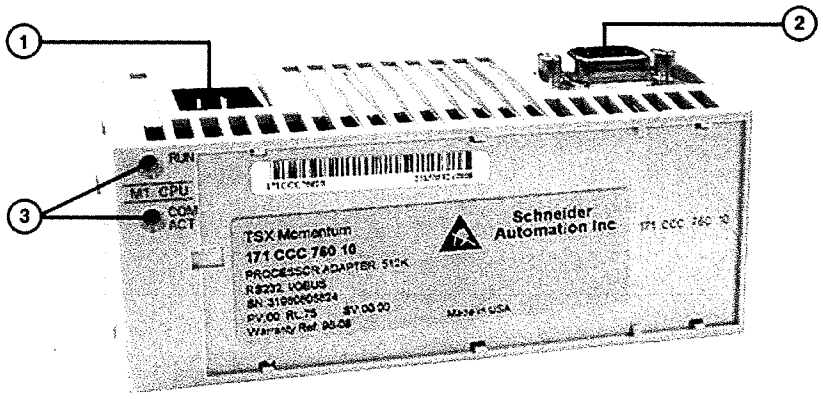

Label	Description
1	Modbus Port 1 connector
2	I/OBus port connector
3	LED indicators

Continued on next page

171 CCC 760 10, Continued

LED Indicators

This Processor Adapter has two LED indicators, RUN and COM ACT. Their functions are described in the table below:

LED	Status	Function
Start up	Both	Single flash. Indicates good health.
RUN	Green	On continuously when the CPU has received power and is solving logic.
		Flashes an error pattern if the CPU is in kernel mode . (See *Run LED Flash Patterns and Error Codes* on page 393)
	Off	CPU is not powered up or is not solving logic.
COM ACT	Green	May be on continuously or blinking. Indicates activity on Modbus port 1.
	Off	No activity on Modbus port 1.

Specifications

The following table contains specifications for the 171 CCC 760 10 TSX Momentum M1 Processor Adapter:

Memory	
Internal Memory	512K bytes
User Memory	18K words
Flash RAM	512K bytes
Clock Speed	32 MHz
Input and Output References	
Registers	26032
Discretes	8192 0*x* references 8192 1*x* references
I/O Servicing	
Local I/O	Services all the points on any host Momentum I/O base
Watchdog timeout	262 ms
Logic solve time	0.16 ms/k ladder logic instructions

Continued on next page

171 CCC 760 10, Continued

Specifications, Continued

Mechanical	
Weight	42.5 g (1.5 oz)
Dimensions (HxDxW)	25.9x61.02x125mm (1.01 x 2.37 x 4.86 in)
Material (Enclosures/ bezels)	Lexan
Operating Conditions	
Temperature	0 ... 60 degrees C
Humidity	5 ... 95% (noncondensing)
Chemical interactions	Enclosures and bezels are made of Lexan, a polycarbonate that can be damaged by strong alkaline solutions
Altitude, full operation	2000m (6500ft)
Vibration	10 ... 57Hz @ 0.075mm displacement amplitude 57...150Hz @ 1g Ref. IEC 68-2-6 FC
Shock	+/-15g peak, 11ms, half sine wave Ref. IEC 68-2-27 EA
RFI Susceptibility/ immunity	Meets CE mark requirements for open equipment. Open equipment should be installed in an industry-standard enclosure, with access restricted to qualified service personnel.
Storage Conditions	
Temperature	-40 ... +85 degrees C
Humidity	5 ... 95% (noncondensing)
Safety Parameters	
Degree of protection	Unintentional access (UL 508 Type 1, NEMA250 Type 1, IP20 conforming to IEC529)
Di-electric strength	RS232 and I/OBus are non-isolated from logic common
Ground continuity	30 A test on the exposed metal connector
Agency Approvals	• UL 508, CSA, CUL, CE • FM class1, div2 pending

Section 2.2
Serial Option Adapter

Overview

Purpose

This section describes the 172 JNN 210 32 Serial Option Adapter, including the front panel components and specifications.

In This Section

This section includes the following topics:

For This Topic...	See Page...
Front Panel Components	58
Specifications	61

Front Panel Components

Overview

The front panel includes:

- An LED indicator
- Battery compartment
- Modbus Port 2 connector

Illustration

The illustration below shows the location of LED indicator, the battery compartment, and the Modbus Port 2 connector.

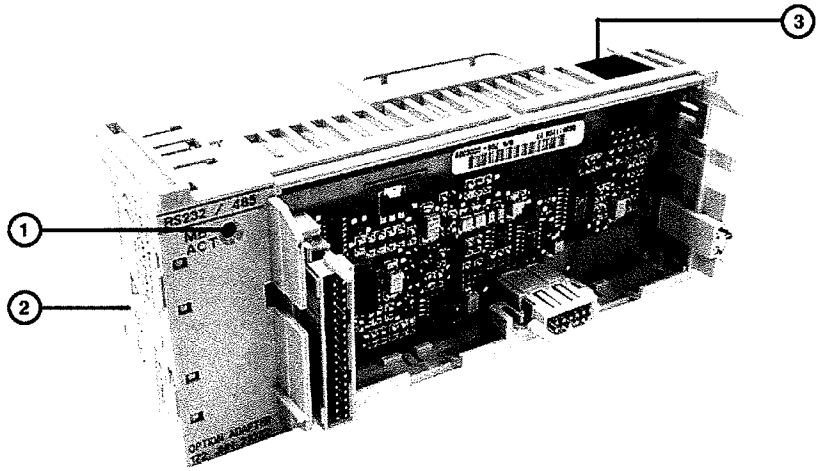

Label	Description
1	LED indicator
2	Battery compartment door
3	Modbus Port 2 connector

Continued on next page

Front Panel Components, Continued

LED Indicator

This Option Adapter has one LED indicator, the Com Act indicator. Its functions are described in the table below.

LED	Status	Function
COM ACT	Green	May be on steadily or blinking. Indicates activity on the RS232/ RS485 serial port.
	Off	No activity on the RS232/RS485 serial port.

Modbus Port 2

Modbus Port 2 is a general-purpose asynchronous serial port with user-selectable RS232/RS485 slave functionality. The choice between RS232 and RS485 is made in the software.

Note: When this Option Adapter is assembled with a 171 CCS 780 00 Processor Adapter or a 171 CCC 780 10 Processor Adapter (with built-in Modbus Port 2), the Modbus Port 2 on the Option Adapter is electrically disabled. The TOD clock and the battery backup on the Option Adapter remain functional.

Auto-Logout Feature On Modbus Port 2

If the RS232 port is chosen, auto-logout is supported. If a programming panel is logged into the CPU via the serial port and its cable gets disconnected, the Processor Adapter automatically logs out the port. This auto-logout feature is designed to prevent a lock-up situation that could prevent other host stations from logging in on other ports.

Auto-logout is not available for any RS485 port, including the RS485 option on the Serial Option Adapter. The user must log out of the processor using the programming software.

Continued on next page

Specifications

Specifications

This section provides the specifications for the 172 JNN 210 32 TSX Momentum Serial Option Adapter:

Mechanical	
Weight	85.05 g (3 oz)
Dimensions (HxDxW)	58.3 (on battery side) x 60.6 x 143.1mm
	(2.27 x 2.36 x 5.57 in)
Material (Enclosures/bezels)	Lexan
Time-of-Day Clock	
Accuracy	+/- 13 s/day
Batteries	
Type	AAA alkaline, two required two included with Option Adapter (in separate package)
Service life	< 30 days from the time a battery-low indication is received to actual battery failure @ 40degrees C maximum ambient temperature with the system continuously powered down.
Shelf life	In excess of 5 yr @ room temperature
Operating Conditions	
Temperature	0 ... 60 degrees C
Humidity	5 ... 95% (noncondensing)
Chemical interactions	Enclosures and bezels are made of Lexan, a polycarbonate that can be damaged by strong alkaline solutions
Altitude, full operation	2000m (6500ft)
Vibration	10 ... 57Hz @ 0.075mm displacement amplitude 57...150Hz @ 1g Ref. IEC 68-2-6 FC
Shock	+/-15g peak, 11ms, half sine wave Ref. IEC 68-2-27 EA

Continued on next page

Specifications, Continued

Specifications, Continued

RFI Susceptibility/ immunity	Meets CE mark requirements for open equipment. Open equipment should be installed in an industry-standard enclosure, with access restricted to qualified service personnel.
Storage Conditions	
Temperature	-40...+85 degrees C
Humidity	5 ... 95% (noncondensing)
Safety Parameters	
Degree of protection	Unintentional access (UL 508 Type 1, NEMA250 Type 1, IP20 conforming to IEC529)
Di-electric strength	RS232/485 is non-isolated from logic common
Agency Approvals	• UL 508, CSA, CUL, CE • FM class1, div2 pending

Front Panel Components, Continued

Pinouts for Modbus Port 2

The 172 JNN 210 32 Serial Option Adapter uses the following pinouts:

Pin	For RS232	For RS485
1	DTR	RXD -
2	DSR	RXD +
3	TXD	TXD +
4	RXD	
5	signal common	signal common
6	RTS	TXD -
7	CTS	
8	cable shield	cable shield

Mounting the Assembled Adapters on the I/O Base

Overview

This section gives guidelines, safety precautions and a procedure for mounting the assembled Processor and Option Adapter on an I/O base.

Guidelines

The assembled adapters connect with the I/O base at these seven points:

- Two plastic snaps on the front of the Option Adapter fit into two slots on the front of the I/O base
- The plastic snap extensions on the two sides of the Option Adapter fit into the two slots on the sides of the I/O base
- The 12-pin connectors on the center of the back walls of the two units mate together
- The plastic stirrup on the back of the Option Adapter clips onto the bottom of the I/O base

CAUTION

ELECTRICAL CIRCUITRY MAY BE EXPOSED

Electrical circuitry on the I/O base may be exposed when an adapter is not mounted. Make sure that the I/O base is not under power whenever it does not have a Momentum adapter mounted on it.

To make sure that power is not present, do not insert the wiring connectors to the I/O base until after the adapter has been mounted. When more than one connector is on the I/O base, remove all connectors to prevent the unit from receiving power from an unexpected source.

Failure to observe this precaution can result in injury or equipment damage and will void the product warranty.

Continued on next page

Mounting the Assembled Adapters on the I/O Base, Continued

Procedure: Mounting the Assembled Adapters on an I/O Base

Follow the steps in the table below to mount the assembly on an I/O base.

Step	Action
1	Be sure that the I/O base is not under power when you assemble the module.
2	Align the four plastic snap extensions (on the front and sides of the Option Adapter) with the slots on the I/O base. The 12-pin connectors will automcally line up when the units are in this position. The devices should be oriented such that their communicon ports are facing out on the back side of the assembly. 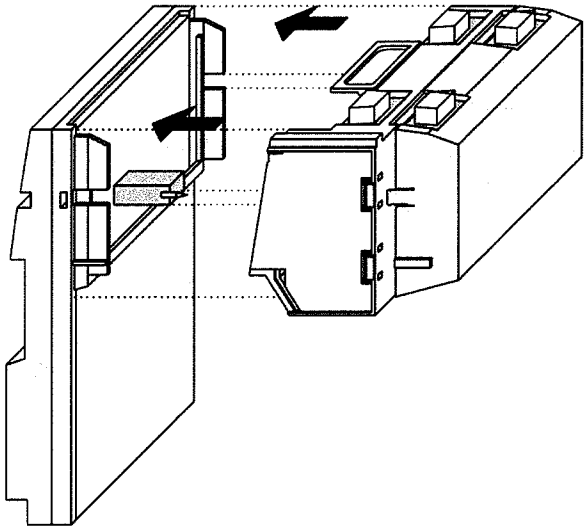

Continued on next page

Mounting the Assembled Adapters on the I/O Base, Continued

Procedure: Mounting the Assembled Adapters on an I/O Base, Continued

Step	Action
3	Push the assembled adapters onto the base, gently pressing the locking tabs inward. Snap #1 shown in the illustration below will not align properly with the mating slot in the I/O base unless the Option Adapter is placed straight onto the base. Do not attach just one latch and rotate the Option Adapter onto the I/O base. 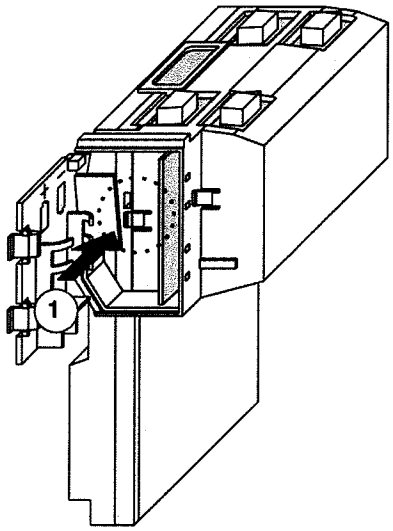 **Result:** The locking tabs on each side of the Option Adapter slide inside the I/O base and out through the locking slot. The 12-pin connectors on the two units are mated to each other in the process.
4	Apply slight pressure to the top of the stirrup on the back of the Option Adapter so that it snaps into place on the bottom of the I/O base.

Disassembling a Module with an Option Adapter

Overview

The three-tiered assembly is designed to fit together tightly so it can withstand shock and vibron in an operng environment. This section contains two procedures:

- Removing the assembled adapters from the I/O base
- Removing the Option Adapter from the Processor

Tools Required

Flat-head screwdriver.

Continued on next page

Disassembling a Module with an Option Adapter, Continued

Procedure: Removing the Adapter Assembly from the I/O Base

Follow the steps in the table below to remove the assembled Option Adapter and M1 Processor Adapter from the I/O base.

Step	Action
1	Make sure that the power is off by removing the terminal connectors from the I/O base.
2	Remove the assembled unit from its wall or DIN rail mounting surface.
	CAUTION **EXPOSED CIRCUITRY IN BATTERY COMPARTMENT** Use care when you insert a screwdriver in the battery compartment so that you do not scratch any exposed elements. **Failure to observe this precaution can result in equipment damage.**
3	Open the battery door and use a flat-head screwdriver to release snaps 1 and 2 as shown in the illustration below. 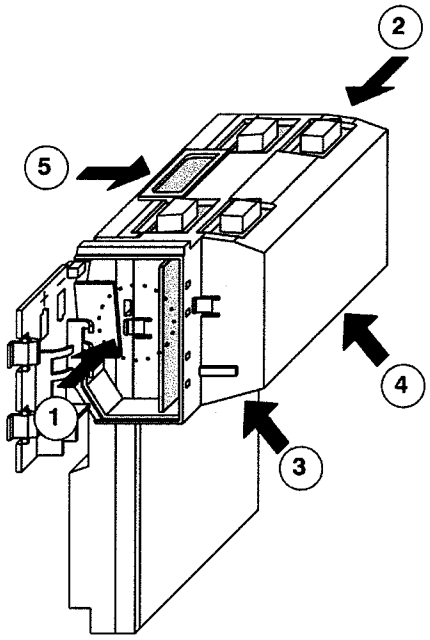

Continued on next page

Disassembling a Module with an Option Adapter, Continued

Procedure: Removing the Adapter Assembly from the I/O Base, Continued

Step	Action
4	Once snaps 1 and 2 have been disengaged, use the screwdriver to release snaps 3 and 4 on the front of the assembly.
5	Gently lift the stirrup on the back of the Option Adapter with your fingers until it disengages from the bottom of the I/O base. Then lift the Option Adapter and M1 assembly from the I/O base. 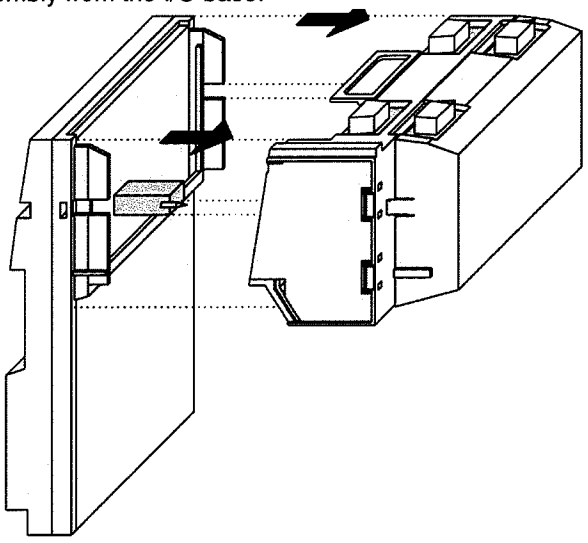

Continued on next page

Disassembling a Module with an Option Adapter, Continued

Procedure: Disassembling an Option Adapter and M1 Processor

Follow the steps in the table below to remove the Option Adapter from the M1 processor.

Step	Action
1	Use a screwdriver to push the clips on both sides of the adapter inward. 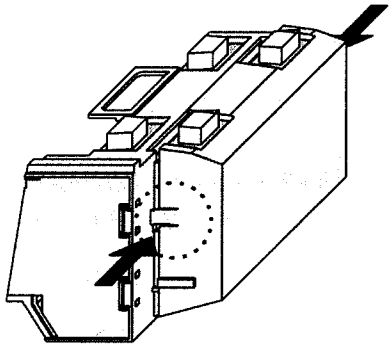
2	Lift off the adapter.

Section 3.3
Installing Batteries in an Option Adapter

Installation Guidelines

Why Install Batteries?

If you are using a Momentum Option Adapter in your CPU assembly, you have a battery-backup capability. The batteries will maintain user logic, state RAM values and the time-of-day clock in the event that the CPU loses power.

What Kind of Batteries?

Two AAA alkaline batteries can be installed in the compartment on the side of the Option Adapter. A set of batteries is supplied with the module (not installed).

CAUTION

ELECTRONIC CIRCUITRY EXPOSED

When the battery door is open, electronic circuitry is exposed. Follow proper ESD measures while handling the equipment during battery maintenance.

Failure to observe this precaution can result in injury or equipment damage.

Installing Batteries

When installing the batteries, observe correct polarity, as indicated on the compartment door.

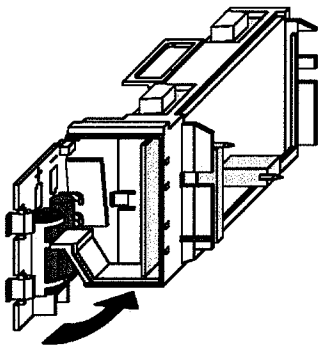

Continued on next page

Installation Guidelines, Continued

Leave Power On When Changing Batteries

Once your CPU has been commissioned and is running, maintain power to the module whenever you change the batteries.

Unless you save to flash, if you change the batteries while the power is OFF, you will have to reload your user logic program from the original files).

Removing and Replacing Batteries

Battery maintenance should be performed only by qualified personnel according to the following illustration.

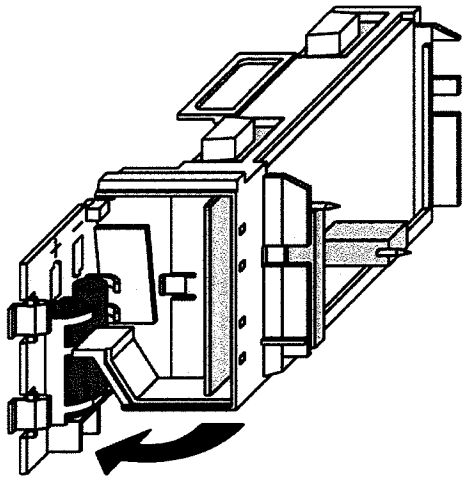

Monitor the Battery

Because a Momentum CPU assembly is designed to be installed in a cabinet where it cannot be seen at all times, no LED was created to monitor health.

We recommend that you reserve a battery coil in your programming panel software configuration and use it to monitor the health of your battery and report the need for replacement prior to battery failure (refer to *Reserving and Monitoring a Battery Coil* on page 200 for Modsoft or *Reserving and Monitoring a Battery Coil* on page 305 for Concept).

170 AAO 921 00 Analog 4 Channel Output Module Base +/- 10 V, 4 ... 20 mA

10

At a Glance

Overview

This chapter describes the 170 AAO 921 00 TSX Momentum I/O base.

What's in this Chapter?

This chapter contains the following topics:

Topic	Page
Front Panel Components	152
Specifications	154
Internal Pin Connections	156
Field Wiring Guidelines	157
Wiring Diagrams	159
I/O Mapping	160
Analog Channel Parameters	161
Analog Outputs	163
Output Ranges	164

Front Panel Components

Overview

This section contains an illustration of the front panel of the 170 AAO 921 00 I/O base and a description of the LEDs.

Front Panel Illustration

The front panel of the I/O base is shown in the illustration below.

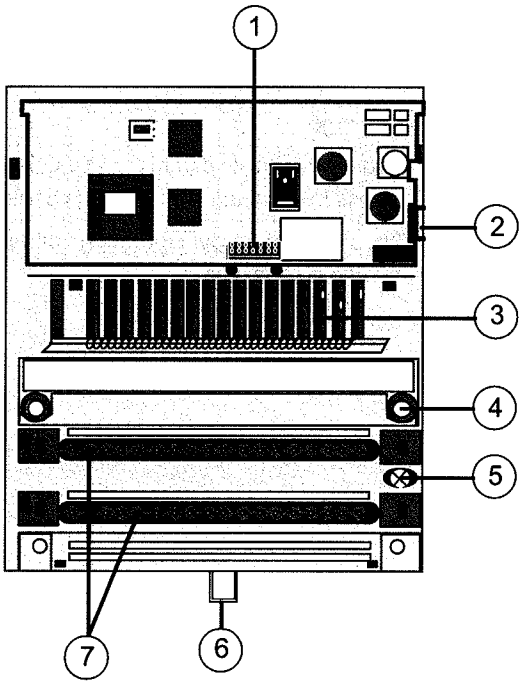

Components of the I/O module

Label	Description
1	Internal interface (ATI) connector
2	Locking and ground contact for the adapter
3	LED status display
4	Mounting holes for panel mount
5	Grounding screw
6	Locking tab for DIN rail mount
7	Sockets for the terminal connectors

LED Illustration

This I/O base has one LED, the ready indicator shown in the illustration below.

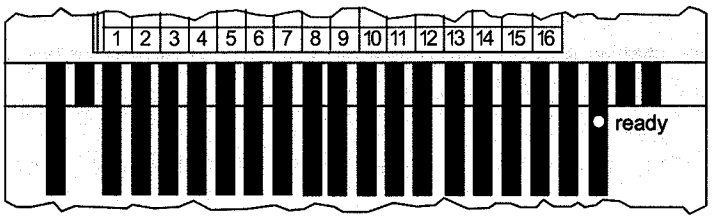

LED Descriptions

The ready indicator is described in the table below.

Indicator	Condition	Message
Ready	Green	Module is ready to communicate. Operating voltage for internal logic is present and self-test has been passed.
	Off	Module is not ready. Operation voltage is not present or module is defective.

Specifications

Overview

This section contains specifications for the 170 AAO 921 00 I/O base.

General Specifications

Module type	4 analog outputs
Output range	+/- 10 V 4 ... 20 mA
Supply voltage	24 VDC
Supply voltage range	20 ... 30 VDC
Supply current consumption (base)	max. 530 mA at 24 VDC
Supply current consumption (actuators)	max. 150 mA at 24 VDC (+/- 5 %)
Power dissipation	5.6 W typical 8.5 W maximum
I/O map	5 output words

Isolation

Between channels	none
Between base power supply and ground	500 Vcc, 1 min
Between channels and ground	500 VAC, 1 min
Output protections	short circuits (in voltage) circuits open in current polarity inversion
Base power supply protection	+/- 30 V (voltage or current output)
Common mode rejection	250 VAC @ 47 ... 63 Hz or 250 VDC Channel-to-ground

Fuses

Internal (not user-replaceable)	2 A slow-blow
External (actuator power supply)	1 A slow-blow (Bussmann GDC-1A or equivalent)

170 AAO 921 00 Analog 4 Channel Output Module Base +/- 10 V, 4 ... 20 mA

10

At a Glance

Overview

This chapter describes the 170 AAO 921 00 TSX Momentum I/O base.

What's in this Chapter?

This chapter contains the following topics:

Topic	Page
Front Panel Components	152
Specifications	154
Internal Pin Connections	156
Field Wiring Guidelines	157
Wiring Diagrams	159
I/O Mapping	160
Analog Channel Parameters	161
Analog Outputs	163
Output Ranges	164

Front Panel Components

Overview

This section contains an illustration of the front panel of the 170 AAO 921 00 I/O base and a description of the LEDs.

Front Panel Illustration

The front panel of the I/O base is shown in the illustration below.

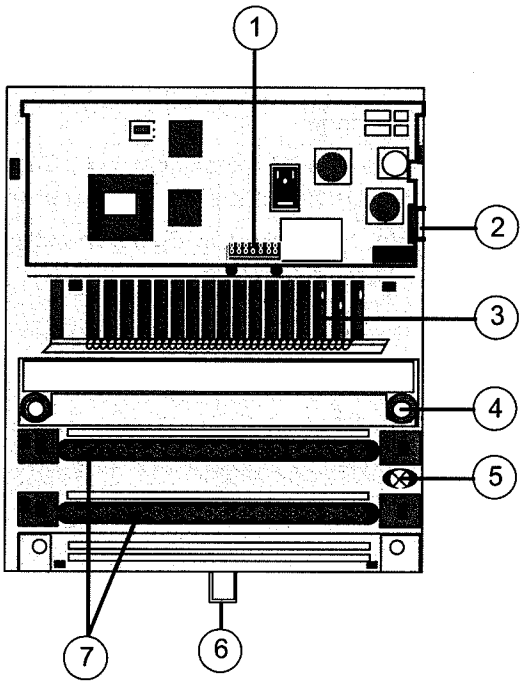

Components of the I/O module

Label	Description
1	Internal interface (ATI) connector
2	Locking and ground contact for the adapter
3	LED status display
4	Mounting holes for panel mount
5	Grounding screw
6	Locking tab for DIN rail mount
7	Sockets for the terminal connectors

LED Illustration

This I/O base has one LED, the ready indicator shown in the illustration below.

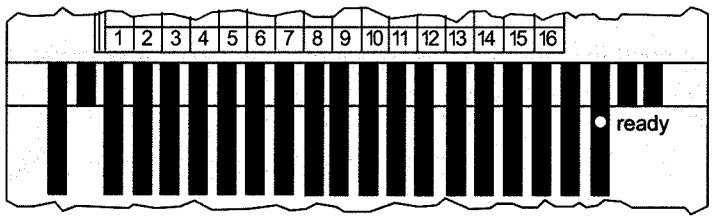

LED Descriptions

The ready indicator is described in the table below.

Indicator	Condition	Message
Ready	Green	Module is ready to communicate. Operating voltage for internal logic is present and self-test has been passed.
	Off	Module is not ready. Operation voltage is not present or module is defective.

Specifications

Overview

This section contains specifications for the 170 AAO 921 00 I/O base.

General Specifications

Module type	4 analog outputs
Output range	+/- 10 V 4 ... 20 mA
Supply voltage	24 VDC
Supply voltage range	20 ... 30 VDC
Supply current consumption (base)	max. 530 mA at 24 VDC
Supply current consumption (actuators)	max. 150 mA at 24 VDC (+/- 5 %)
Power dissipation	5.6 W typical 8.5 W maximum
I/O map	5 output words

Isolation

Between channels	none
Between base power supply and ground	500 Vcc, 1 min
Between channels and ground	500 VAC, 1 min
Output protections	short circuits (in voltage) circuits open in current polarity inversion
Base power supply protection	+/- 30 V (voltage or current output)
Common mode rejection	250 VAC @ 47 ... 63 Hz or 250 VDC Channel-to-ground

Fuses

Internal (not user-replaceable)	2 A slow-blow
External (actuator power supply)	1 A slow-blow (Bussmann GDC-1A or equivalent)

EMC

Immunity	IEC 1131-2 Surge on auxiliary power supply 500V
Emissions	EN 50081-2
Agency approvals	UL, CSA, CE, FM Class 1 Div. 2 pending

Physical Dimensions

Width	125 mm (4.9 in)
Depth (with no adapter)	40 mm (1.54 in)
Length	141.5 mm (5.5 in) with no or one busbar
Weight	215 g (0.45 lb)

Note: The 24 VDC actuator power supply is protected in the same way as the analog outputs (different from the base power supply).

Analog Outputs

Number of channels	4	
Format of transmitted data	full 16 bits signed (2's complement)	
Protection (base and actuators)	polarity inversion	
Range	+/-10 V	4 ... 20 mA (current source or sink)
Load impedance	1 KOhm minimum	600 Ohms maximum
Capacitative load	< 1 micro F	< 1 micro F
Error at 25 deg. C	0.2% PE*	0.4% PE*
Error at 60 deg. C	0.25% PE*	0.5% PE*
Temperature drift (60 deg. C)	10ppmPE*/ deg. C	30ppmPE*/ deg. C
Resolution	12 bits + sign	12 bits + sign
Update time for the 4 outputs	2 ms	

Note: *Not to be confused with Protective Earth. PE is used here as a European notation for full scale, with the following values:

- 10 V in range of +/- 10 V
- 20mA in range of 4 ... 20 mA

EMC

Immunity	IEC 1131-2 Surge on auxiliary power supply 500V
Emissions	EN 50081-2
Agency approvals	UL, CSA, CE, FM Class 1 Div. 2 pending

Physical Dimensions

Width	125 mm (4.9 in)
Depth (with no adapter)	40 mm (1.54 in)
Length	141.5 mm (5.5 in) with no or one busbar
Weight	215 g (0.45 lb)

Note: The 24 VDC actuator power supply is protected in the same way as the analog outputs (different from the base power supply).

Analog Outputs

Number of channels	4	
Format of transmitted data	full 16 bits signed (2's complement)	
Protection (base and actuators)	polarity inversion	
Range	+/-10 V	4 ... 20 mA (current source or sink)
Load impedance	1 KOhm minimum	600 Ohms maximum
Capacitative load	< 1 micro F	< 1 micro F
Error at 25 deg. C	0.2% PE*	0.4% PE*
Error at 60 deg. C	0.25% PE*	0.5% PE*
Temperature drift (60 deg. C)	10ppmPE*/ deg. C	30ppmPE*/ deg. C
Resolution	12 bits + sign	12 bits + sign
Update time for the 4 outputs	2 ms	

Note: *Not to be confused with Protective Earth. PE is used here as a European notation for full scale, with the following values:

- 10 V in range of +/- 10 V
- 20mA in range of 4 ... 20 mA

Internal Pin Connections

Overview

This section contains an illustration showing the internal connections between terminals on the I/O base.

Illustration

The following illustration shows the internal connections between terminals.

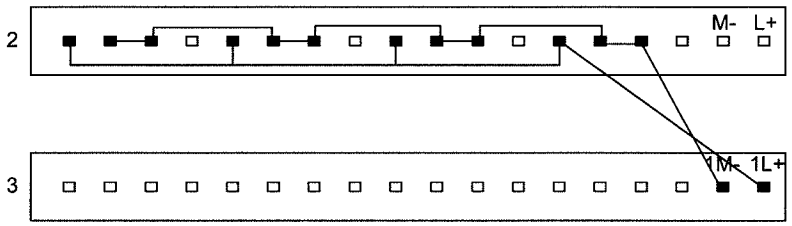

Field Wiring Guidelines

Overview

This section contains wiring guidelines and precautions.

Terminal Connector

To connect field devices to the I/O base, you need a field wiring terminal connector. Schneider Electric sells terminal connectors in sets of three.

Type	Part Number
Screw-in	170 XTS 001 00
Spring-clip	170 XTS 002 00

Mapping Terminal Blocks

> **⚠ CAUTION**
>
> **POTENTIAL FOR SHORT CIRCUITS AND/OR POWER-UP SPIKES**
>
> Provide external fuses on the operating voltage to protect the module. Appropriate fuse values are shown in the wiring illustration. An unprotected module may be subject to short circuits and/or power-up spikes.
>
> **Failure to follow these instructions can result in injury or equipment damage.**

Mapping terminal blocks is described in the table below.

Row	Terminal No.	Description	Function
2	4, 8, 12, 16	-	Not used
	1, 5, 9, 13	1L+	+24 V actuator power supply output
	2, 3, 6, 7, 10, 11, 14, 15	1M-	Actuator power supply neg. 0 V return
	17	M-	Module power supply 0 V
	18	L+	Module power supply +24V
3	1, 5, 9, 13	OUTI1-, OUTI2- OUTI3-, OUTI4-	Output current mode (sink) Channels 1 ... 4
	2, 6, 10, 14	OUTI1+, OUTI2+ OUTI3+, OUTI4+	Output current mode (source) Channels 1 ... 4
	3, 7, 11, 15	OUTU1+, OUTU2+ OUTU3+, OUTU4+	Output voltage mode Channels 1 ... 4
	4, 8, 12, 16	-	Not used
	17	1M-	Actuator power supply neg. 0 V return
	18	1L+	+24 V actuator power supply output

Fuse Required

The 1 A slow-blow fuse shown in the wiring diagram (see *Wiring Diagrams, p. 159*) must be wired into the actuator power supply.

Signal Protection

To protect the signal from external noise induced in serial or common mode, we recommend the following precautions.

- Use shielded twisted-pair cables with a minimum conductor cross section of 24 AWG or 0.22mm^2.
- Connect the cable shield to ground via the cable grounding rail (part number CER 001).
- You may combine the analog inputs on this I/O base in one multi-pair cable provided they have the same reference relative to ground.
- The actuator power supply must be protected in the same way as the signal itself.

Wiring Diagrams

Overview

This section contains a diagram to assist you in wiring the following types of devices:

- output voltage
- output current (source mode)
- output current (sink) voltage

Diagram

Examples of wiring are shown in the diagram below:

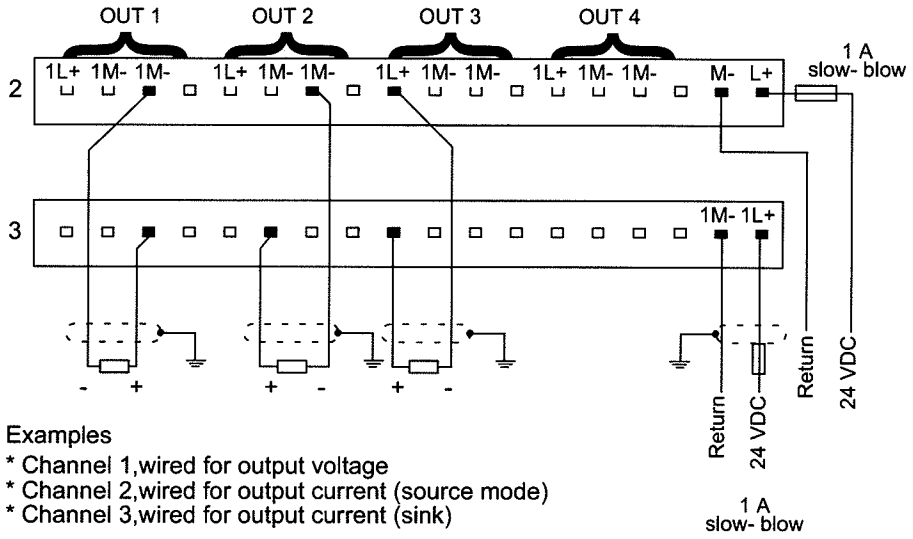

Examples
* Channel 1,wired for output voltage
* Channel 2,wired for output current (source mode)
* Channel 3,wired for output current (sink)

I/O Mapping

Overview

The 170 AAO 921 00 TSX Momentum I/O base supports four analog output channels. This section contains information about the mapping of the I/O data into input words.

I/O Map

The I/O base must be mapped as five contiguos output words, as follows:

Word	Output Data
1 = LSW	Parameters for output channels 1 ... 4
2	Value for output channel 1
3	Value for output channel 2
4	Value for output channel 3
5 = MSW	Value for output channel 4

Analog Channel Parameters

Overview

Parameters must be set for all of the analog channels before the module can be commissioned. This section provides the codes for setting the parameters and gives examples of parameter settings.

Note: If you set new parameters for the module, always send a complete set of parameters (all channels, inputs and outputs), even if you only want to change a single parameter. Otherwise the module will refuse the new parameters and continue working with the old ones.

Key

This section focuses on output word 1, as highlighted in the table below:

Word	Output Data
1 = LSW	**Parameters for Output channels 1 ... 4**
2	Value, output channel 1
3	Value, output channel 2
4	Value, output channel 3
5= MSW	Value, output channel 4

Illustration

Parameters are set by entering a four-bit code in output word 1, as follows:

Output Word 1 (Register 4*x*, parameter word)															
15	14	13	12	11	10	9	8	7	6	5	4	3	2	1	0
for output channel 4				for output channel 3				for output channel 2				for output channel 1			

Parameter Codes

The value entered in this word defines the behaviour of the I/O module in case of loss of communication. Each 4-bit nibble in output word 1 must be configured with one of the following binary codes to define the channel parameters. Parameters must be set for all four channels before the module can be commissioned.

In each case, the x may be a 0 or a 1:

Code	Output Parameter)	Function
0000	Reserved value	Forces the I/O base into a default condition where it continues to receive field inputs according to the previous received channel parameters.
00x1	Output to Zero	Sends a value to the base that causes it to apply zero at the field output.
01x1	Full Range	Sends a value to the base that causes it to apply full scale (+10 V or + 20 mA) at the field output.
10x1	Output Last Value	Sends a value to the base that causes it to apply the last received value at the field output.

Analog Outputs

Overview

This section describes how to interpret the value of the analog output channels.

Key

This section describes output words 2 ... 5, as highlighted in the table below:

Word	Output Data
1	Parameters for output channels 1 ... 4
2	**Value, input channel 1**
3	**Value, input channel 2**
4	**Value, input channel 3**
5	**Value, input channel 4**

Analog Output Values

Mapping of analog output values is shown below.

Output Word 2 (Register 4*x*+1, analog value sent on channel 1)															
15	**14**	**13**	**12**	**11**	**10**	**9**	**8**	**7**	**6**	**5**	**4**	**3**	**2**	**1**	**0**

Output Word 3 (Register 4*x*+2, analog value sent on channel 2)															
15	**14**	**13**	**12**	**11**	**10**	**9**	**8**	**7**	**6**	**5**	**4**	**3**	**2**	**1**	**0**

Output Word 4 (Register 4*x*+3, analog value sent on channel 3)															
15	**14**	**13**	**12**	**11**	**10**	**9**	**8**	**7**	**6**	**5**	**4**	**3**	**2**	**1**	**0**

Output Word 5 (Register 4*x*+4, analog value sent on channel 4)															
15	**14**	**13**	**12**	**11**	**10**	**9**	**8**	**7**	**6**	**5**	**4**	**3**	**2**	**1**	**0**

Output Ranges

Overview

This section contains illustrations explaining the analog/digital relation for the voltage and current output ranges.

+/- 10 V

The following illustration shows the analog/digital relation at +/- 10 V:

The value of the output voltage as a function of the digital value transmitted is determined using the formula:
Va =1/ 3200 x Vn in Volts

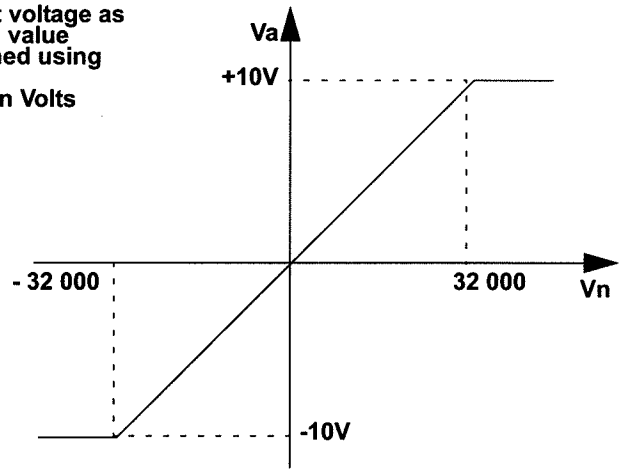

4 ... 20 mA

The following illustration shows the analog/digital relation at 4 ... 20 mA current:

The value of the output current as a function of the digital value transmitted is determined using the formula:

Ia =1/ 20000 x Vn + 4 in mA

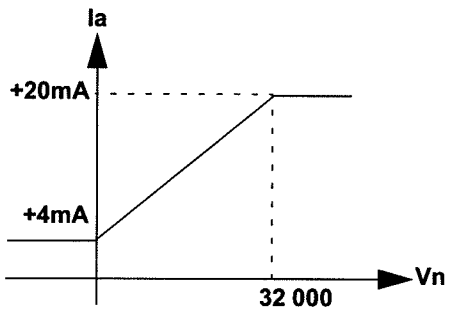

170 ADM 350 10 24 VDC 16 Pt. In / 16 Pt. Out Module Base

15

At a Glance

Overview

This chapter describes the 170ADM 350 10 TSX Momentum I/O base.

See also 170 ADM 350 11 (see *170 ADM 350 11 24 VDC - 16 Pt. In / 16 Pt. Out Module Base, p. 241*) and 170 ADM 350 15 (see *170 ADM 350 15 24 VDC - 16 Pt. In / 16 Pt. Out Module Base, p. 259*).

What's in this Chapter?

This chapter contains the following topics:

Topic	Page
Front Panel Components	224
Specifications	226
Internal Pin Connections	229
Field Wiring Guidelines	230
Wiring Diagrams	232
I/O Mapping	237

Front Panel Components

Overview

This section contains an illustration of the front panel of the 170 ADI 350 10 I/O base and a description of the LEDs.

Front Panel Illustration

The front panel of the I/O base is shown in the illustration below.

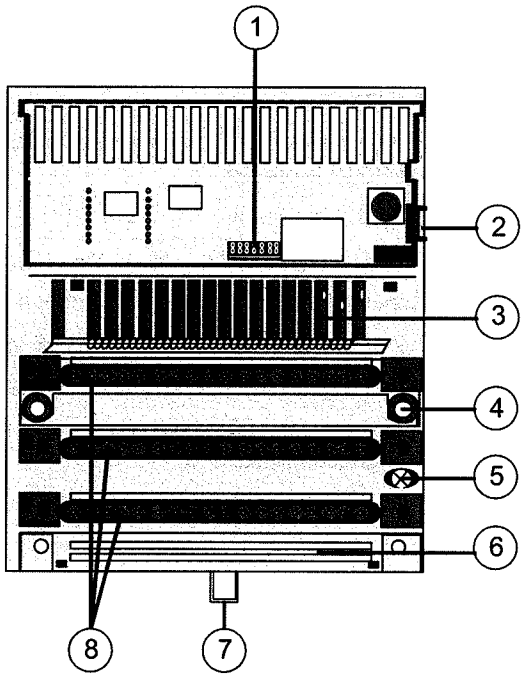

Components of the I/O module

Label	Description
1	Internal interface (ATI) connector
2	Locking and ground contact for the adapter
3	LED status display
4	Mounting holes for panel mount
5	Grounding screw
6	Busbar Mounting Slot
7	Locking tab for DIN rail mount
8	Sockets for the terminal connectors

LED Illustration

The LEDs are shown in the illustration below.

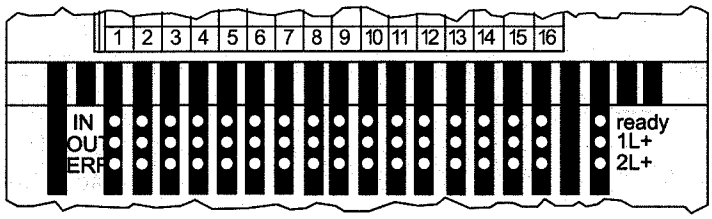

LED Descriptions

The LEDs are described in the table below.

Indicator	Condition	Message
Ready	Green	Module is ready to communicate. Operating voltage for internal logic (5 V) is present.
	Off	Module is not ready.
1L+	Green	Output voltage 1L+ for outputs 1 ... 8 (group 1) is present
	Off	Output voltage for outputs 1 ... 8 (group 1) is not present
2L+	Green	Output voltage 2L+ for outputs 9 ... 16 (group 2) is present
	Off	Output voltage for outputs 9 ... 16 (group 2) is not present
Upper row IN 1...16	Green	Input status (an LED per input); Input point active, ie. input carries a 1 signal (logically ON)
	Off	Input point inactive, ie. input carries a 0 signal (logically OFF)
Middle row OUT 1...16	Green	Output status (an LED per output); Output point active, ie. output carries a 1 signal (logically ON)
	Off	Output point inactive, ie. Output carries a 0 signal (logically OFF)
Lower row ERR 1...16	Red	Output overload (an LED per output). Short circuit or overload on the corresponding output.
	Off	Outputs 1 ... 16 operating normally.

Specifications

Overview

This section contains specifications for the 170 ADM 350 10 I/O base.

General Specifications

Module type	16 discrete inputs in 1 group 16 discrete outputs in 2 groups (8 pts/group)
Supply voltage	24 VDC
Supply voltage range	20...30 VDC
Supply current consumption	max. 250 mA at 24 VDC
Power dissipation	6 W + ((# of input points on x .144 W) + (# of output points on x .25 W))
I/O map	1 input word 1 output word

Isolation

Input to input	none
Output group to output group	none
Input to output group	none
Field to communication adapter	Defined by communication adapter type

Fuses

Internal	none
External: operating voltage	1 A slow-blow (Bussman GDC-1A or equivalent)
External: input voltage	According to the supply of the connected sensors– not to exceed 4A fast-blow
External: output voltage	According to the supply of the connected actuators– not to exceed 4 A fast-blow/ group

EMC

Immunity	IEC 1131-2 Surge on auxiliary power supply 2 kV
Emissions	EN 50081-2
Agency approvals	UL, CSA, CE, FM Class 1, Div. 2 pending

Physical Dimensions

Width	125 mm (4.9 in)
Depth (with no adapter)	40 mm (1.54 in)
Length	141.5 mm (5.5 in) no or one busbar 159.5mm (6.3in) two busbars 171.5 mm (6.75in) three busbars
Weight	200 g (0.44 lb)

Discrete Inputs

Number of points	16
Number of groups	1
Points per group	16
Signal type	True High
IEC 1131 type	1+ (See Appendix *IEC 1131 Input Types, p. 655* for definitions of IEC input types.)
ON voltage	+11 ... +30 VDC
OFF voltage	-3 ... +5 VDC
Input current	10.0 mA minimum ON 2.0 mA maximum OFF
Input voltage range	-3 ... +30 VDC
Input resistance	4 kOhm
Response time	2.2 ms OFF to ON 3.3 ms ON to OFF

Discrete Outputs

Output type	Solid state switch
Output supply voltage	24 VDC
Output supply voltage range	20 ... 30 VDC
Output voltage	External supply - .5 VDC
Number of points	16
Number of groups	2
Points per group	8
Current capacity	0.5 A/point maximum 4 A/group 8 A/module
Signal type	True High
Leakage current (output out)	< 1 mA @ 24 VDC
Surge (inrush) current	5 A for 1 ms
On state voltage drop	< 0.5 VDC @ 0.5 A
Fault sensing (See Note Below)	Outputs are electronically safeguarded to assist in short circuit and overload protection
Fault reporting	1 red LED/point (row 3) ON when short current/ overload occurs
Error indication	Output overload for at least one out put (I/O-Error) to communication adapter
Response time (resistive load / 0.5 A)	< 0.1 ms OFF to ON < 0.1 ms ON to OFF
Maximum switching cycles	1000/h for 0.5 A inductive load 100/s for 0.5 A resistive load 8/s for 1.2 W Tungsten load

Note: Discrete 24 VDC outputs incorporate thermal shutdown and overload protection. The output current of a shortened output is limited to a nondestructive value. The short circuit heats the output driver and the output will switch off. The output will switch on again if the driver leaves the overtemperature condition. If the short circuit still exists, the driver will reach the overtemperature condition again and will switch off again.

Internal Pin Connections

Overview

This section contains an illustration showing the internal connections between terminals on the I/O base and an optional busbar.

Illustration

Rows 1 through 3 show the internal connections between terminals on the I/O base. Row 4 through 6 show the internal connections on the optional busbar.

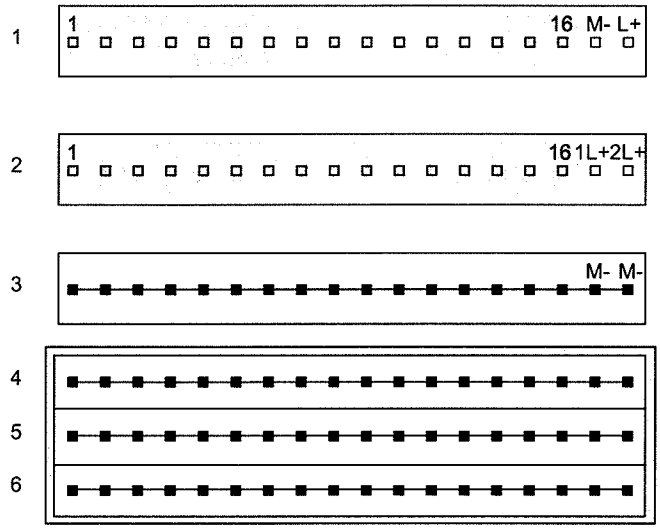

Field Wiring Guidelines

Overview

Inputs are field wired to row 1 of the base. The outputs are field wired to row 2. This section contains wiring guidelines and precautions.

Terminal Connector

To connect field devices to the I/O base, you need a field wiring terminal connector. Schneider Electric sells terminal connectors in sets of three.

Type	Part Number
Screw-in	170 XTS 001 00
Spring-clip	170 XTS 002 00

Busbar May Be Required

Depending on the type of field devices you are using, you may need a 1-, 2-, or 3-row busbar. The following busbars are available from Schneider Electric.

Type	Number of Rows	Part Number
Screw-in	1 - row	170 XTS 006 01
	2 - row	170 XTS 005 01
	3 - row	170 XTS 004 01
Spring-clip	1 - row	170 XTS 007 01
	2 - row	170 XTS 008 01
	3 - row	170 XTS 003 01

Mapping Terminal Blocks

⚠ CAUTION

POTENTIAL FOR SHORT CIRCUITS AND/OR POWER-UP SPIKES

Provide external fuses on the operating voltage to protect the module. Appropriate fuse values are shown in the wiring illustration. An unprotected module may be subject to short circuits and/or power-up spikes.

Failure to follow these instructions can result in injury or equipment damage.

The following table shows mapping terminal blocks and optional busbars.

Row	Terminal	Function
1	1...16	Inputs
	17	Return (M-)
	18	+ 24 VDC Operating voltage (L+)
2	1 ... 8	Outputs for group 1
	9 ... 16	Outputs for group 2
	17/18	+ 24 VDC for output group 1 (1L+) and group 2 (2L+)
3	1 ... 16	Return for outputs
	17/18	Return (M-)
4	1 ... 18	Input voltage for inputs I1 ... I16 or PE
5	1 ... 18	Return (M-)
6	1 ... 18	Protective earth (PE)

Protective Circuit May Be Required

When contacted switches are used on the input lines or when lines to the peripherals are very long, the outputs of inductive loads require protective circuitry with a clamping/suppressor diode. Install the protective circuit prallel to the operating coil.

Mapping Terminal Blocks

⚠ CAUTION

POTENTIAL FOR SHORT CIRCUITS AND/OR POWER-UP SPIKES

Provide external fuses on the operating voltage to protect the module. Appropriate fuse values are shown in the wiring illustration. An unprotected module may be subject to short circuits and/or power-up spikes.

Failure to follow these instructions can result in injury or equipment damage.

The following table shows mapping terminal blocks and optional busbars.

Row	Terminal	Function
1	1...16	Inputs
	17	Return (M-)
	18	+ 24 VDC Operating voltage (L+)
2	1 ... 8	Outputs for group 1
	9 ... 16	Outputs for group 2
	17/18	+ 24 VDC for output group 1 (1L+) and group 2 (2L+)
3	1 ... 16	Return for outputs
	17/18	Return (M-)
4	1 ... 18	Input voltage for inputs I1 ... I16 or PE
5	1 ... 18	Return (M-)
6	1 ... 18	Protective earth (PE)

Protective Circuit May Be Required

When contacted switches are used on the input lines or when lines to the peripherals are very long, the outputs of inductive loads require protective circuitry with a clamping/suppressor diode. Install the protective circuit prallel to the operating coil.

Wiring Diagrams

Overview

This section provides diagrams to assist you in wiring the following types of devices:

- 2-wire devices
- sensors activated by an output
- 4-wire sensors with a 2-wire actuator
- broken wire detection

2-Wire Devices

The diagram below shows an example of wiring for two-wire devices. Separate connections to pins 17 and 18 are shown on row 3, even though these two pins are internally connected. This is done to halve the load.

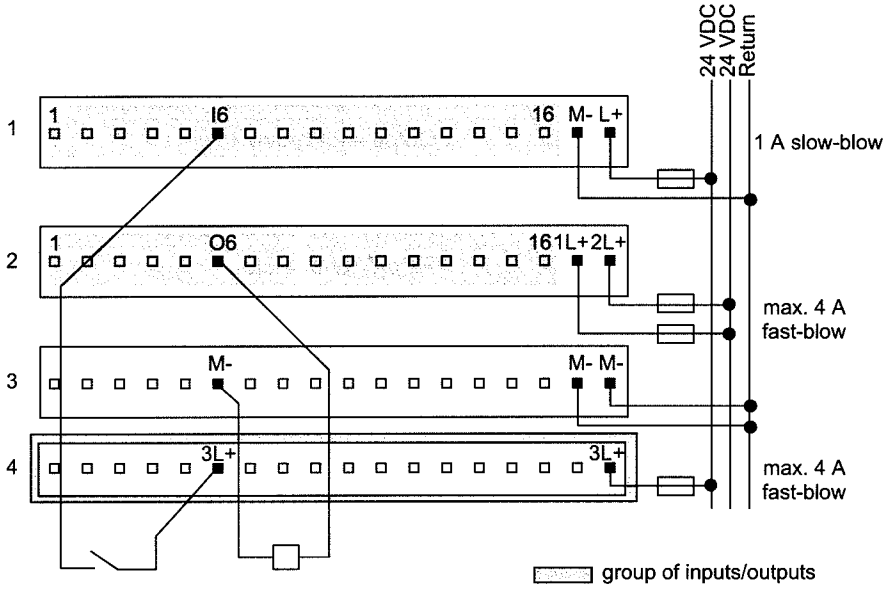

Sensor Activated by Output

The wiring diagram below shows an example of a sensor activated by an output. The diagram shows the sensors being supplied with voltage only when the outputs on pins 6 and 14, row 2, are high. The inputs from pins 6 and 14, row 1, can be high only when one of the associated outputs is high.

Separate connections to pins 17 and 18 are shown on row 3, even though these two pins are internally connected. This is done to halve the load.

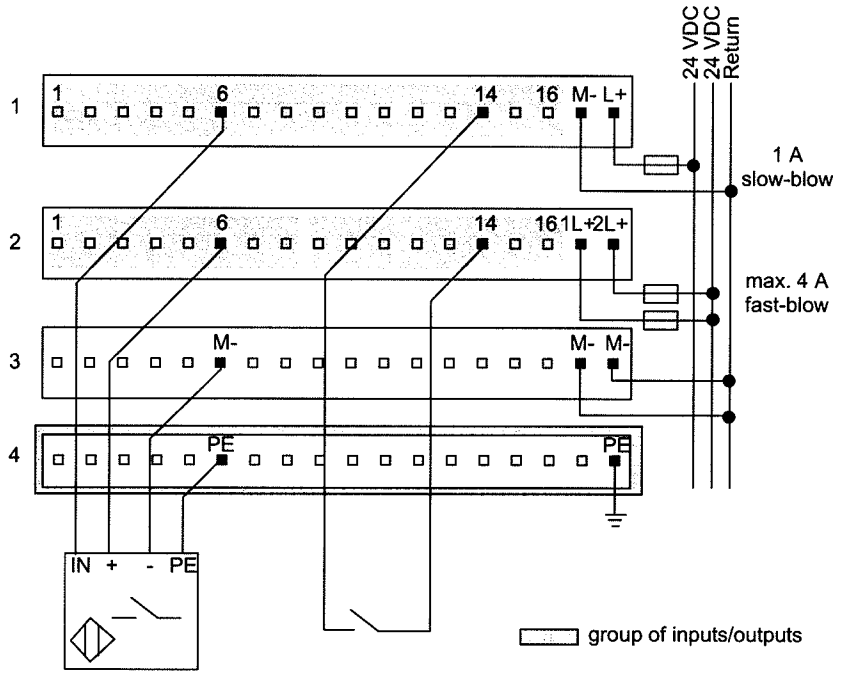

Four-Wire Sensor with a Two-Wire Actuator

The diagram below shows a four-wire sensor with a two-wire actuator. The process of wiring a 3-wire sensor is very similar to the one below. Because 3-wire sensors do not require PE, a 2-row busbar could be used instead of the 3-row busbar shown.

Separate connections to pins 17 and 18 are shown on row 3, even though these two pins are internally connected. This is done to halve the load.

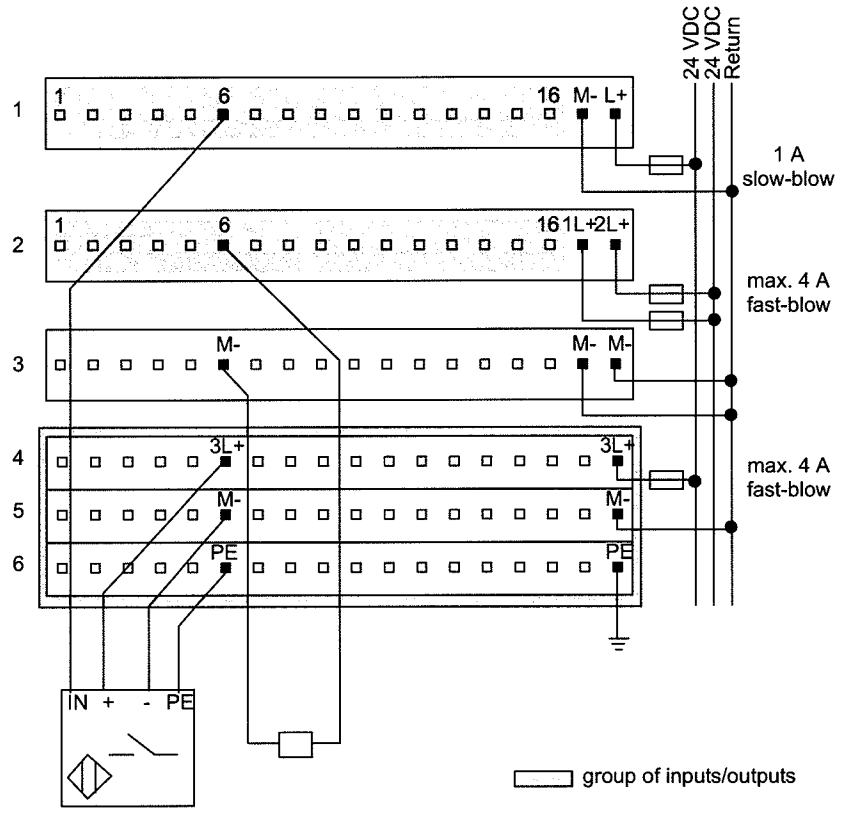

Broken Wire Detection

The diagram below shows a three-wire actuator with an optional wiring scheme for broken wire detection. The dotted line reads back whether or not current has reached the actuator. When the output on pin 6, row 2, is high, the input from pin 6, row 1, must also be high.

Separate connections to pins 17 and 18 are shown on row 3, even though these two pins are internally connected. This is done to halve the load.

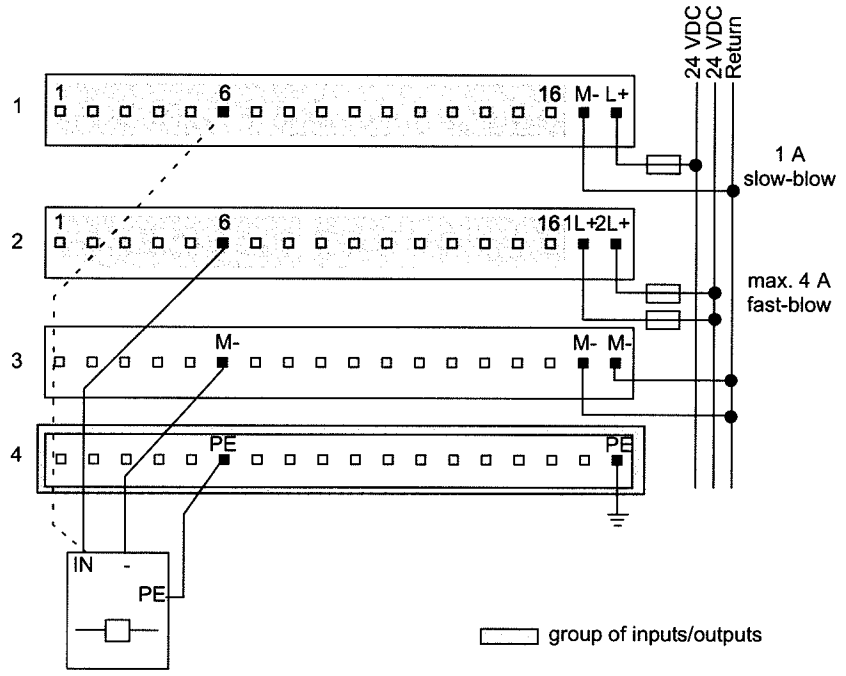

Simplified Input Schematics

The following diagram shows the field-side input circuitry.

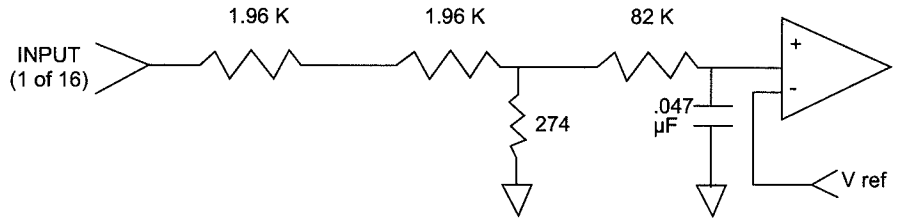

Simplified Output Schematics

The following diagram shows the field-side output circuitry.

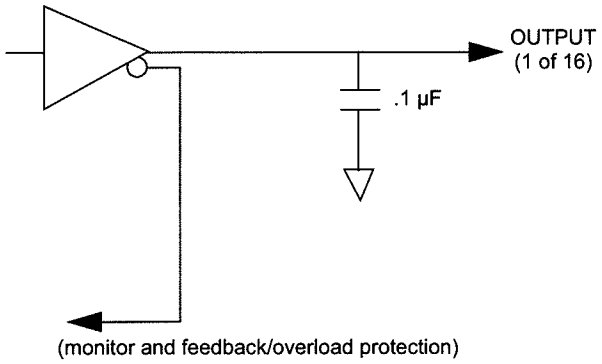

I/O Mapping

Overview

The 170 ADM 350 10 TSX Momentum I/O base supports 16 discrete inputs and 16 discrete outputs. This section contains information about the mapping of the I/O data into input words and output words.

I/O Map

The I/O base may be mapped as one input word and as one output word, or as 16 discrete input points and as 16 discrete output points.

IEC vs. Ladder Logic

In order to correctly field wire the inputs/outputs and map the input/outputs data, you need to know which type of Momentum Adapter is mounted on the base. Adapters may be either IEC compliant or 984 Ladder Logic compliant.

	IEC Compliant	**984 Ladder Logic Compliant**
Momentum Processor Adapters	All	None
Momentum Communication Adapters	All, except 170 NEF 110 21 170 NEF 160 21 170 FNT 110 00 170 FNT 110 01	170 NEF 110 21 170 NEF 160 21 170 FNT 110 00 170 FNT 110 01

Data Mapping

The figure below shows how data is mapped on the I/O base with an IEC Compliant adapter. When the I/O is mapped as discrete points (1x/0x), the MSB is assigned to Pin 1 and the LSB is assigned to Pin 16. When the I/O is mapped as a word or register (3x/4x), the MSB (bit 15) is assigned to Pin 16 and the LSB (bit 0) is assigned to Pin 1.

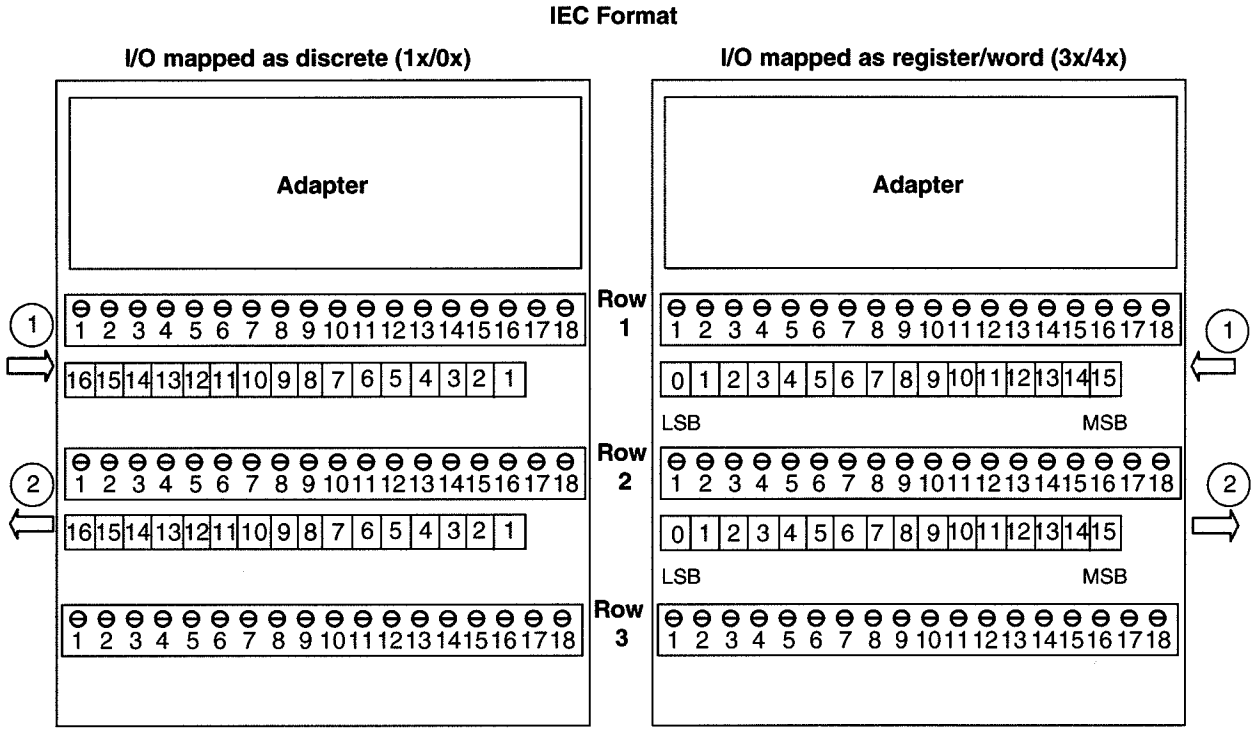

1 inputs
2 outputs

The figure below shows how data is mapped on the I/O base with a 984 Ladder Logic Compliant adapter. When the I/O is mapped as discrete points (1x/0x), the MSB is assigned to Pin 16 and the LSB is assigned to Pin 1. When the I/O is mapped as a word or register (3x/4x), the MSB (bit 15) is assigned to Pin 1 and the LSB (bit 0) is assigned to Pin 16

984 Format

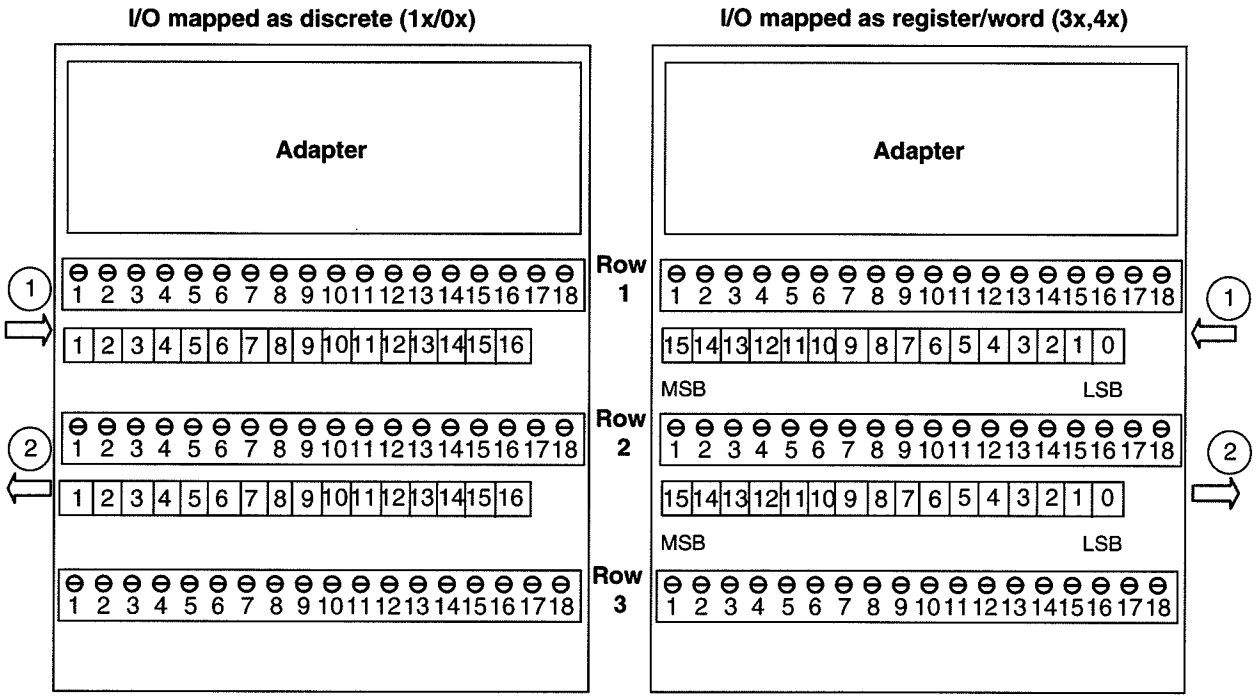

1 inputs
2 outputs

170 AAI 030 00 Analog 8 Channel Differential Input Module Base

6

At a Glance

Overview

This chapter describes the 170 AAI 030 00 TSX Momentum I/O base.

What's in this Chapter?

This chapter contains the following topics:

Topic	Page
Front Panel Components	78
Specifications	80
Internal Pin Connections	83
Field Wiring Guidelines	84
Wiring Illustrations	85
I/O Mapping	86
Analog Channel Parameters	87
Analog Inputs	89
Input Measuring Ranges	91

Front Panel Components

Overview

This section contains an illustration of the front panel of the 170 AAI 030 00 I/O base and a description of the LEDs.

Front Panel Illustration

The front panel of the I/O base is shown in the illustration below.

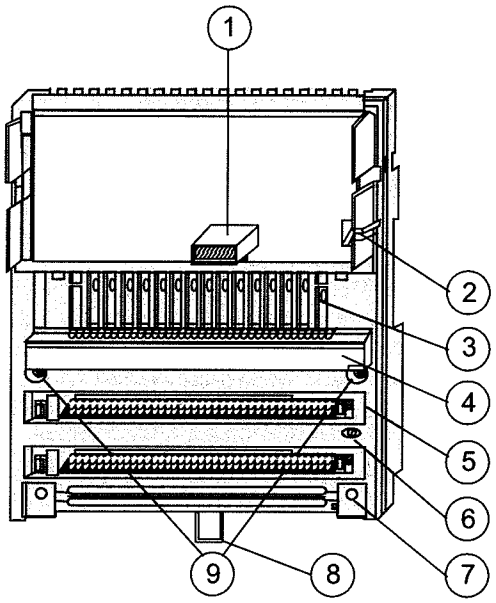

Components of the I/O module

Label	Description
1	Internal interface (ATI) connector
2	Locking and ground contact for the adapter
3	LED status display
4	Protective cover
5	Sockets for the terminal connectors
6	Grounding screw
7	Busbar mounting slot
8	Locking tab for DIN rail mount
9	Mounting holes for panel mount

LED Illustration

This I/O base has one LED, the ready indicator shown in the illustration below.

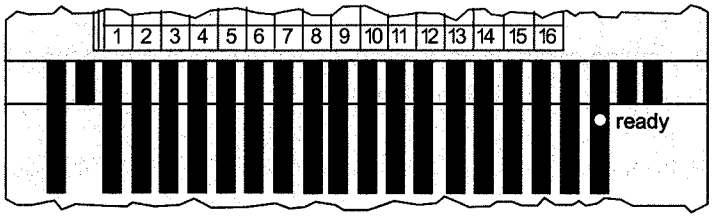

LED Descriptions

The ready indicator is described in the table below.

Indicator	Condition	Message
Ready	Green	Module is ready to communicate. Operating voltage for internal logic is present and self-test has been passed.
	Off	Module is not ready. Operating voltage is not present or module is defective.

Specifications

Overview

This section contains specifications for the 170 AAI 030 00 I/O base.

General Specifications

Module type	8 analog inputs
Input voltage range	+/- 10 V, +/- 5 V, 1 ... 5 V
Input current range	+/- 20 mA, 4 ... 20 mA
Supply voltage	24 VDC
Supply voltage range	20 ... 30 VDC
Supply current consumption	max. 362 mA at 24 VDC
Power dissipation	3.73 W typical 6.58 W maximum
I/O map	8 input words 2 output words

Isolation

Between channels	140 VAC Hz or 200 VDC, 1 min
Between input channels and ground	500 VAC

Fuses

Internal (not user-replaceable)	2 A slow-blow
External (recommended)	1 A slow-blow (Bussmann GDC-1A or equivalent)

EMC

Immunity	IEC 1131-2 Surge on auxiliary power supply 500 V
Emissions	EN 50081-2
Agency approvals	UL, CSA, CE, FM Class 1 Div.2 pending

Physical Dimensions

Width	125 mm (4.9 in)
Depth (with no adapter)	40 mm (1.54 in)
Length	141.5 mm (5.5 in) no busbar
Weight	215 g (0.45 lb)

Analog Inputs

Surge tolerance: input voltage input current	 +/- 30 VDC +/- 25 mA
Number of channels	8
Format of transmitted data	full 16 bits signed (2's complement)
Protection	polarity inversion
Error indication	none
Common mode rejection	250 VAC @ 47 ... 63 Hz or 100 VDC channel-to-ground
Update time for the inputs (in ms)	1.33 + n x 1.33 n = number of declared channels
Filtering	low pass with cutoff frequency 18 kHz

Range Specific Data

Range	**+/- 10 V**	**+/- 5 V**	**1 ... 5 V**	**+/- 20 mA**	**4 ... 20 mA**
Input impedance	20 MOhm	20 MOhm	20 MOhm	250 Ohm	250 Ohm
Error at 25 deg. C	0.27% PE*	0.21% PE*	0.13% PE*	0.32% PE*	0.28% PE*
Error at 60 deg. C	0.32% PE*	0.26% PE*	0.19% PE*	0.41% PE*	0.38% PE*
Temperature drift (60 deg. C)	14 ppm PE*/ deg. C	14 ppm PE*/ deg. C	18 ppm PE*/ deg. C	24 ppm PE*/ deg. C	30 ppm PE*/ deg. C
Resolution	14 bits + sign	14 bits + sign	15 bits	14 bits + sign	15 bits

Note: *Not to be confused with Protective Earth. PE is used here as a European notation for full scale, with the following values:

- 10 V in range of +/- 10 V
- 5 V in range of +/- 5 V
- 4 V in range of 1 ... 5 V
- 20 mA in range of +/- 20 mA
- 16 mA in range of 4 ... 20 mA

Internal Pin Connections

Overview

This section contains an illustration showing the internal connections between terminals on the I/O base.

Illustration

The following illustration shows the internal connections between terminals.

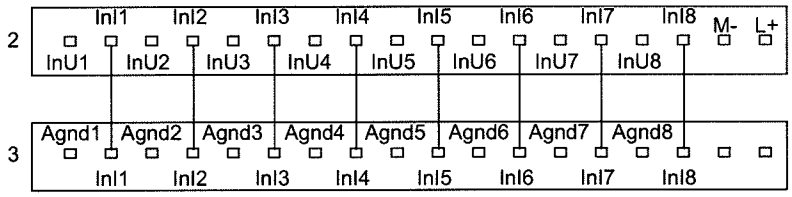

Field Wiring Guidelines

Overview

This section contains wiring guidelines and precautions.

Required Terminal Connector

To connect field devices to the I/O base, you need a field wiring terminal connector. Schneider Electric sells terminal connectors in sets of three.

Type	Part Number
Screw-in	170 XTS 001 00
Spring-clip	170 XTS 002 00

Mapping Terminal Blocks

⚠ WARNING

POTENTIAL FOR SHORT CIRCUITS AND/OR POWER-UP SPIKES

Provide external fuses on the operating voltage to protect the module. Appropriate fuse values are shown in the wiring illustration. An unprotected module may be subject to short circuits and/or power-up spikes.

Failure to follow these instructions can result in injury or equipment damage.

Mapping terminal blocks are described in the table below.

Row	Terminal No.	Description	Function
2	1, 3, 5, 7, 9,11, 13, 15	InU1 ... InU8	Voltage input, channel 1 ... 8
	2, 4, 6, 8, 10, 12, 14, 16	InI1 ... InI8	Current input, channel 1 ... 8
	17	M-	- return (of operating voltage)
	18	L+	+ 24 VDC Operating voltage
3	1, 3, 5, 7, 9,11, 13, 15	Agnd1 ... Agnd8	Analog ground, channel 1 ... 8
	2, 4, 6, 8, 10, 12, 14, 16	InI1 ... InI8	Current input, channel 1 ... 8

Signal Protection

To protect the signal from external noise induced in serial or common mode, we recommend the following precautions.

- Use shielded twisted-pair cables with a minimum conductor size of 24 AWG or 0.22 mm^2.
- Connect the cable shield to ground via the cable grounding rail (part number CER 001).
- You may combine the analog inputs on this I/O base in one multi-pair cable provided the same ground is used.
- When wiring the voltage supply, use sensors that do not have ground reference.

Wiring Illustrations

Overview

This section contains an illustration to assist you in wiring the I/O base.

Illustration

The illustration below shows an example of wiring for voltage input and for current input.

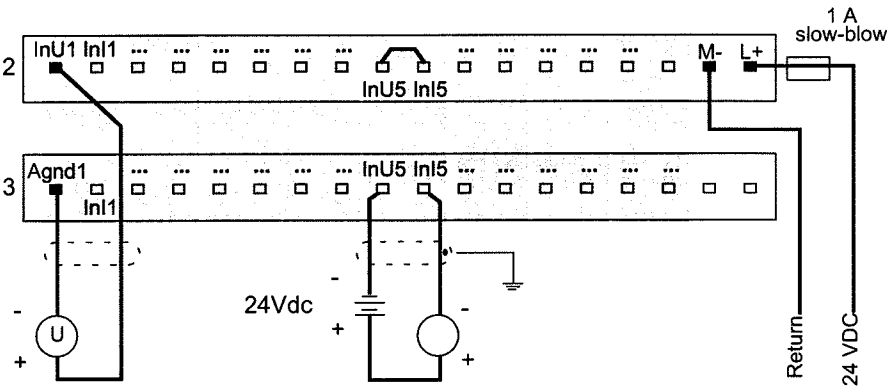

Examples
* Channel1, wired for voltage input
* Channel 5, wired for current input

I/O Mapping

Overview

The 170 AAI 030 00 TSX Momentum I/O base supports 8 analog inputs. This section contains information about the mapping of the analog input values into input words and the usage of output words for channel configuration.

I/O Map

The I/O base must be mapped as eight contiguous input words and two contiguous output words, as follows:

Word	Input Data	Output Data
1	Value, input channel 1	Parameters for input channels 1 ... 4
2	Value, input channel 2	Parameters for input channels 5 ... 8
3	Value, input channel 3	Not used
4	Value, input channel 4	Not used
5	Value, input channel 5	Not used
6	Value, input channel 6	Not used
7	Value, input channel 7	Not used
8	Value, input channel 8	Not used

Analog Channel Parameters

Overview

Parameters must be set for all of the analog channels before the module can be commissioned. This section provides the codes for setting the parameters and gives examples of parameter settings.

Note: If you set new parameters for the module, always send a complete set of parameters (all channels, inputs and outputs), even if you only want to change a single parameter. Otherwise the module will refuse the new parameters and continue working with the old ones.

Key

This section focuses on output words 1 and 2, as highlighted in the table below:

Word	Input Data	Output Data
1	Value, input channel 1	**Parameters for input channels 1 ... 4**
2	Value, input channel 2	**Parameters for input channels 5 ... 8**
3	Value, input channel 3	Not used
4	Value, input channel 4	Not used
5	Value, input channel 5	Not used
6	Value, input channel 6	Not used
7	Value, input channel 7	Not used
8	Value, input channel 8	Not used

Illustration

Parameters are set by entering a four-bit code in output words 1 and 2, as follows:

Output Word 1 (Register 4*x*)															
15	14	13	12	11	10	9	8	7	6	5	4	3	2	1	0
for input channel 4				for input channel 3				for input channel 2				for input channel 1			

Output Word 2 (Register 4*x*+1)															
15	14	13	12	11	10	9	8	7	6	5	4	3	2	1	0
for input channel 8				for input channel 7				for input channel 6				for input channel 5			

Codes for Analog Input Parameters

Use the following codes to set the parameters for each analog input channel:

Code (binary)	Code (hex)	Parameter
0000	0	Reserved value (see note below)
0010	2	+/-5V and +/-20mA input range
0011	3	+/-10V input range
0100	4	Channel inactive
1010	A	1 ... 5V and 4 ... 20 mA input range

Note: The 0000 reserved value is more a control than a parameter. It forces the I/O base into a default condition where it continues to receive field inputs according to the previous channel parameters.

Analog Inputs

Overview

This section describes how to interpret the value of the analog input channels.

Key

This section describes input words 1 ... 8, as highlighted in the table below:

Word	Input Data	Output Data
1	**Value, input channel 1**	Parameters for input channels 1 ... 4
2	**Value, input channel 2**	Parameters for input channels 5 ... 8
3	**Value, input channel 3**	Not used
4	**Value, input channel 4**	Not used
5	**Value, input channel 5**	Not used
6	**Value, input channel 6**	Not used
7	**Value, input channel 7**	Not used
8	**Value, input channel 8**	Not used

Bit Assignments

The following table tells how bits are assigned:

Analog-to-digital conversion	Carried out on 14 bits + sign for bipolar input ranges,15 bits for unipolar ranges
Bit 15	Sign bit
Bits 14 ... 0	Input channel values

Analog Input Values

Mapping of analog input values is shown below.

Input Word 1 (Register 3*x*, analog value returned on channel 1)															
15	14	13	12	11	10	9	8	7	6	5	4	3	2	1	0

Input Word 2 (Register 3*x*+1, analog value returned on channel 2)															
15	14	13	12	11	10	9	8	7	6	5	4	3	2	1	0

Input Word 3 (Register 3*x*+2, analog value returned on channel 3)															
15	14	13	12	11	10	9	8	7	6	5	4	3	2	1	0

Input Word 8 (Register 3*x*+7, analog value returned on channel 8)															
15	14	13	12	11	10	9	8	7	6	5	4	3	2	1	0

Broken Wire Indication

Broken wire detection is possible for the 4 ... 20 mA range. In this case, a current signal that is less than 2 mA on one of the inputs is detected as a broken wire. The input word of that channel returns the signed value -32,768. A broken wire indication has the following binary format:

Broken wire indication in an input word															
1	0	0	0	0	0	0	0	0	0	0	0	0	0	0	0

Input Measuring Ranges

Overview

This section contains illustrations explaining the analog/digital relation for the three input measuring ranges.

+/- 10 V

The following illustration shows the analog/digital relation at +/- 10 V:

The digital value transmitted by the input base as a function of the analog input voltage is determined using the formula:

Vn = 3200 x Va

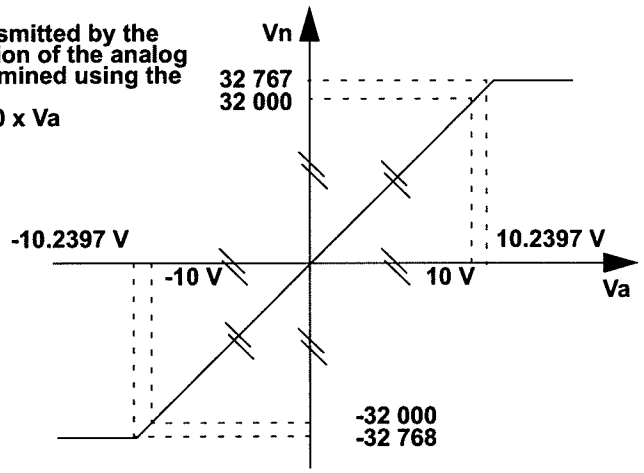

+/- 5 V

The following illustration shows the analog/digital relation at +/- 5 V:

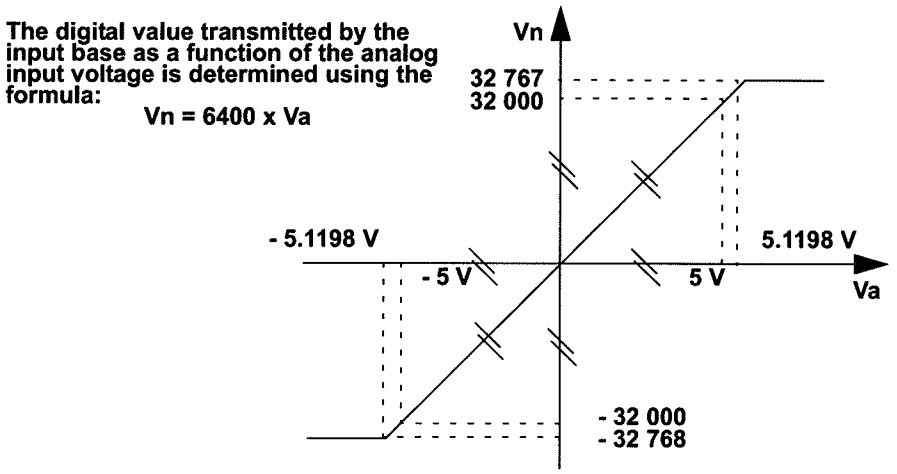

+/- 20 mA

The following illustration shows the analog/digital relation for the input measuring range +/- 20 mA

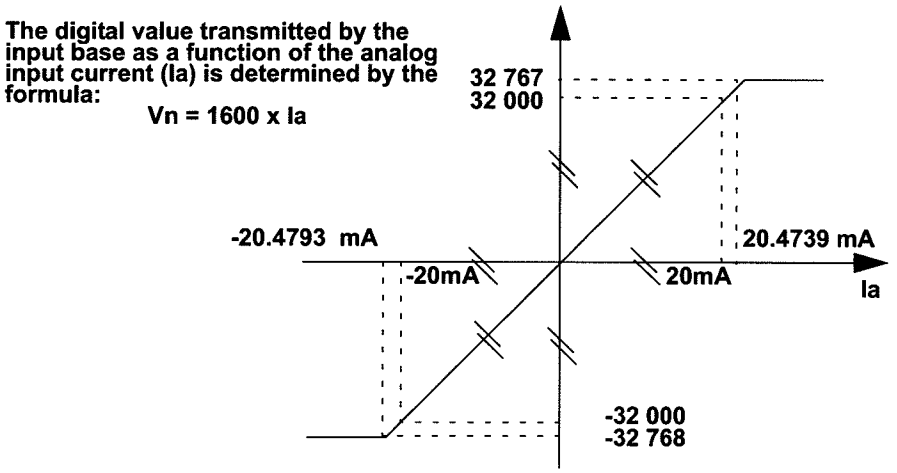

1 ... 5 V

The following illustration shows the analog/digital relation for the input measuring range 1 ... 5 V.

The digital value transmitted by the input base as a function of the input voltage (Va) is determined by the formula:

Vn = 8000 x Va - 8000
in the voltage range:
0.9041 ... 5.0959

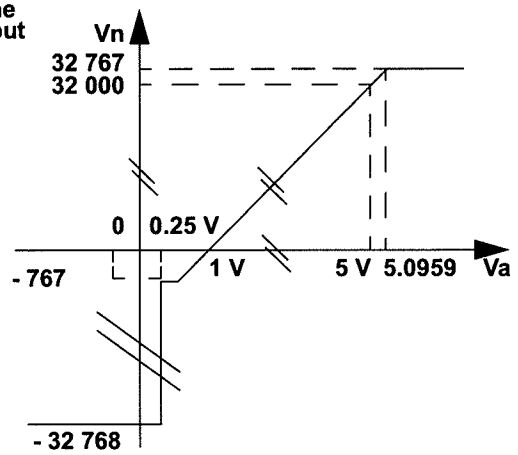

4 ... 20 mA

The following illustration shows the analog/digital relation at 4 ... 20 mA current:

The digital value transmitted by the input base as a function of the input current (Ia) is determined using the formula:

Vn = 2000 x Ia - 8000
in the current range:
3.6165 ... 20.3835 mA

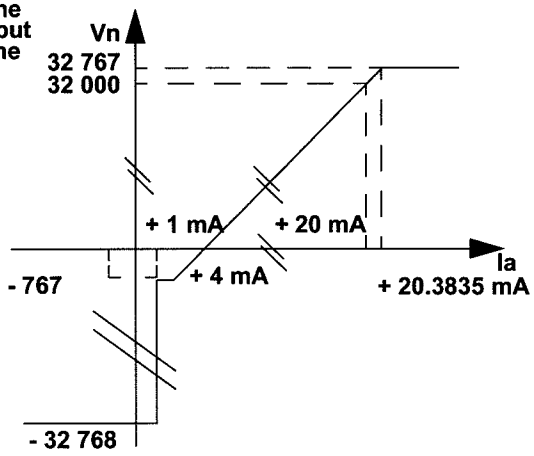

ELECTRICAL COMPONENTS

CONCEPT® Stainless Steel Type 4X Wall-Mounted Enclosures

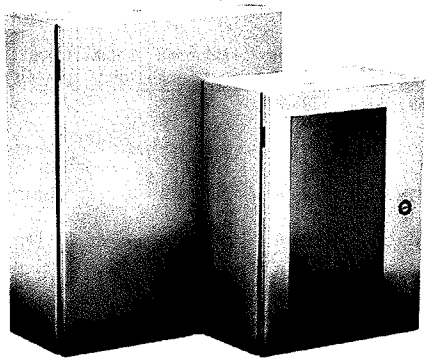

Application

The CONCEPT stainless steel enclosure, with its streamlined design and Type 4X rating, is a perfect fit for mounting electrical or high-tech electronic equipment in a variety of indoor and outdoor settings. It is typically used in the following areas where corrosion-resistant protection is needed: food processing plants, pharmaceutical manufacturing facilities, petrochemical plants, pulp and paper processing, and water treatment facilities.

Construction

- Manufactured from 16 or 14 gauge Type 304 or 316L stainless steel
- Seams continuously welded and ground smooth
- Minimum-width body flange provides maximum door opening
- Body flange trough excludes liquids and contaminants
- Panel mounting studs fit optional CONCEPT panels and other accessories
- Mounting holes in back of body for direct mounting or for optional external mounting brackets
- Type 304 stainless steel hidden hinges promote clean aesthetic appearance
- Standard full-access door opening
- Doors are interchangeable and easily removable by pulling captive hinge pins
- Provision on door (except window door style) for thermoplastic data pocket
- Provision on door (except window door style) for optional doorstop kit
- Quarter-turn latches (or a 3-point latch system on larger enclosures) furnished with flush slotted insert. Optional handles or inserts are available.
- Seamless foam-in-place gasket provides oiltight and dusttight seal against contaminants
- Self-grounding latch system with double seal provides maximum protection against leakage
- Bonding provision on door. Grounding stud on body.
- Furnished hardware kit consists of panel-mounting nuts, panel-grounding hardware, and sealing washers for wall-mounting holes
- Installation instructions for enclosure and accessories are provided

Finish

Enclosures are unpainted. Door and body have smooth #4 brushed finish. Optional mild steel panels are painted white. Optional conductive panels are available.

Industry Standards

Mounting brackets required to meet UL/CSA external mounting requirements.

UL 508A, File No. E61997: Type 3R, 4, 4X, and 12
NEMA/EEMAC Type 3R, 4, 4X, 12, and 13
CSA File No. 42186: Type 4, 4X, and 12
VDE IP66
IEC 60529, IP66

Meets Type 3RX requirements

Patents

This product covered by the following patents:

US 360,345
DE 9405854.7
US 5,509,703
US 5,666,695

Other patents pending.

Accessories

Corrosion Inhibitors
Data Pocket
DIN3 Rails
Door Stop Kit
Lighting Kits
Mounting Brackets
Panels
Panels, NEMA
Terminal Block Kit Assembly
Thermal Accessories

Data Pockets for Solid Door Enclosures

- No pocket when enclosure B dimension = 12.00 in. (305mm)
- Small pocket when enclosure A dimension <30.00 in. (762mm) and B dimension is between 12 in. (305mm) and 20.00 in. (508mm)
- Large pocket when enclosure A dimension >30.00 in. (762mm) and B dimension is >20.00 in. (508mm)

Modification Services Program

You can customize this product to your unique requirements by specifying from these options:

- Enclosure height, width, depth
- Holes and cutouts in body, doors, subpanels
- Tapped holes in subpanels
- Fasteners, mounting channel in enclosure and subpanel
- Mounting (adds and deletes)
- Doors
- Subpanels
- Thermal management (louvers, fans, filters)
- Windows
- Standard accessories
- Drip shield

To order, contact your local Hoffman sales representative.

NOTE: For information about modifications outside the scope of the Modification Services program, contact your Hoffman sales representative.

Subject to change without notice PH 763 422 2211 • FX 763 422 2600 • www.hoffmanonline.com © 2007 Hoffman Enclosures Inc.

CONCEPT® Stainless Steel Type 4X Wall-Mounted Enclosures

Standard Sizes CONCEPT® Stainless Steel Single-Door Wall-Mount Enclosures

Catalog Number	A x B x C in. (mm)	Stainless Steel Type	Door Ga.	Body Ga.	CONCEPT Panel Catalog Number	Conductive Panel Catalog Number	Panel Size D x E (in.)	Panel Size D x E (mm)	Mounting G x H (in.)	Mounting G x H (mm)	Latch (qty)	Latch (style)	J (in.)	J (mm)
CSD12126SS	12.00 x 12.00 x 6.00 (305 x 305 x 152)	304	16	16	CP1212	CP1212G	10.20 x 10.20	259 x 259	10.50 x 10.50	267 x 267	1	1/4-turn	6.00	152
CSD12126SS6	12.00 x 12.00 x 6.00 (305 x 305 x 152)	316L	16	16	CP1212	CP1212G	10.20 x 10.20	259 x 259	10.50 x 10.50	267 x 267	1	1/4-turn	6.00	152
CSD16126SS	16.00 x 12.00 x 6.00 (406 x 305 x 152)	304	16	16	CP1612	CP1612G	14.20 x 10.20	361 x 259	14.50 x 10.50	368 x 267	1	1/4-turn	8.00	203
CSD16126SS6	16.00 x 12.00 x 6.00 (406 x 305 x 152)	316L	16	16	CP1612	CP1612G	14.20 x 10.20	361 x 259	14.50 x 10.50	368 x 267	1	1/4-turn	8.00	203
CSD16166SS	16.00 x 16.00 x 6.00 (406 x 406 x 152)	304	16	16	CP1616	CP1616G	14.20 x 14.20	361 x 361	14.50 x 14.50	368 x 368	1	1/4-turn	8.00	203
CSD16166SS6	16.00 x 16.00 x 6.00 (406 x 406 x 152)	316L	16	16	CP1616	CP1616G	14.20 x 14.20	361 x 361	14.50 x 14.50	368 x 368	1	1/4-turn	8.00	203
CSD20166SS	20.00 x 16.00 x 6.00 (508 x 406 x 152)	304	16	16	CP2016	CP2016G	18.20 x 14.50	462 x 361	18.50 x 14.50	470 x 368	1	1/4-turn	10.00	254
CSD20166SS6	20.00 x 16.00 x 6.00 (508 x 406 x 152)	316L	16	16	CP2016	CP2016G	18.20 x 14.50	462 x 361	18.50 x 14.50	470 x 368	1	1/4-turn	10.00	254
CSD20206SS	20.00 x 20.00 x 6.00 (508 x 508 x 152)	304	16	16	CP2020	CP2020G	18.20 x 18.20	462 x 462	18.50 x 18.50	470 x 470	1	1/4-turn	10.00	254
CSD20206SS6	20.00 x 20.00 x 6.00 (508 x 508 x 152)	316L	16	16	CP2020	CP2020G	18.20 x 18.20	462 x 462	18.50 x 18.50	470 x 470	1	1/4-turn	10.00	254
CSD16128SS	16.00 x 12.00 x 8.00 (406 x 305 x 203)	304	16	16	CP1612	CP1612G	14.20 x 10.20	361 x 259	14.50 x 10.50	368 x 267	1	1/4-turn	8.00	203
CSD16128SS6	16.00 x 12.00 x 8.00 (406 x 305 x 203)	316L	16	16	CP1612	CP1612G	14.20 x 10.20	361 x 259	14.50 x 10.50	368 x 267	1	1/4-turn	8.00	203
CSD16168SS	16.00 x 16.00 x 8.00 (406 x 406 x 203)	304	16	16	CP1616	CP1616G	14.20 x 14.20	361 x 361	14.50 x 14.50	368 x 368	1	1/4-turn	8.00	203
CSD16168SS6	16.00 x 16.00 x 8.00 (406 x 406 x 203)	316L	16	16	CP1616	CP1616G	14.20 x 14.20	361 x 361	14.50 x 14.50	368 x 368	1	1/4-turn	8.00	203
CSD16208SS	16.00 x 20.00 x 8.00 (406 x 508 x 203)	304	16	16	CP2016	CP2016G	18.20 x 14.20	462 x 361	14.50 x 18.50	368 x 470	1	1/4-turn	8.00	203
CSD16208SS6	16.00 x 20.00 x 8.00 (406 x 508 x 203)	316L	16	16	CP2016	CP2016G	18.20 x 14.20	462 x 361	14.50 x 18.50	368 x 470	1	1/4-turn	8.00	203
CSD20168SS	20.00 x 16.00 x 8.00 (508 x 406 x 203)	304	16	16	CP2016	CP2016G	18.20 x 14.20	462 x 361	18.50 x 14.50	470 x 368	1	1/4-turn	10.00	254
CSD20168SS6	20.00 x 16.00 x 8.00 (508 x 406 x 203)	316L	16	16	CP2016	CP2016G	18.20 x 14.20	462 x 361	18.50 x 14.50	470 x 368	1	1/4-turn	10.00	254
CSD20208SS	20.00 x 20.00 x 8.00 (508 x 508 x 203)	304	16	16	CP2020	CP2020G	18.20 x 18.20	462 x 462	18.50 x 18.50	470 x 470	1	1/4-turn	10.00	254
CSD20208SS6	20.00 x 20.00 x 8.00 (508 x 508 x 203)	316L	16	16	CP2020	CP2020G	18.20 x 18.20	462 x 462	18.50 x 18.50	470 x 470	1	1/4-turn	10.00	254
CSD24168SS	24.00 x 16.00 x 8.00 (610 x 406 x 203)	304	16	16	CP2416	CP2416G	22.20 x 14.20	564 x 361	22.50 x 14.50	572 x 368	1	1/4-turn	12.00	305
CSD24168SS6	24.00 x 16.00 x 8.00 (610 x 406 x 203)	316L	16	16	CP2416	CP2416G	22.20 x 14.20	564 x 361	22.50 x 14.50	572 x 368	1	1/4-turn	12.00	305
CSD24208SS	24.00 x 20.00 x 8.00 (610 x 508 x 203)	304	16	16	CP2420	CP2420G	22.20 x 18.20	564 x 462	22.50 x 18.50	572 x 470	1	1/4-turn	12.00	305
CSD24208SS6	24.00 x 20.00 x 8.00 (610 x 508 x 203)	316L	16	16	CP2420	CP2420G	22.20 x 18.20	564 x 462	22.50 x 18.50	572 x 470	1	1/4-turn	12.00	305
CSD24248SS	24.00 x 24.00 x 8.00 (610 x 610 x 203)	304	14	16	CP2424	CP2424	22.20 x 22.20	564 x 564	22.50 x 22.50	572 x 572	2	1/4-turn	5.00	127
CSD24248SS6	24.00 x 24.00 x 8.00 (610 x 610 x 203)	316L	14	16	CP2424	CP2424G	22.20 x 22.20	564 x 564	22.50 x 22.50	572 x 572	2	1/4-turn	5.00	127
CSD30248SS	30.00 x 24.00 x 8.00 (762 x 610 x 203)	304	14	16	CP3024	CP3024G	28.20 x 22.20	716 x 564	28.50 x 22.50	724 x 572	2	1/4-turn	5.00	127
CSD30248SS6	30.00 x 24.00 x 8.00 (762 x 610 x 203)	316L	14	16	CP3024	CP3024G	28.20 x 22.20	716 x 564	28.50 x 22.50	724 x 572	2	1/4-turn	5.00	127
CSD30308SS	30.00 x 30.00 x 8.00 (762 x 762 x 203)	304	14	14	CP3030	CP3030G	28.20 x 28.20	716 x 716	28.50 x 28.50	724 x 724	2	1/4-turn	5.00	127
CSD30308SS6	30.00 x 30.00 x 8.00 (762 x 762 x 203)	316L	14	14	CP3030	CP3030G	28.20 x 28.20	716 x 716	28.50 x 28.50	724 x 724	2	1/4-turn	5.00	127
CSD36248SS	36.00 x 24.00 x 8.00 (914 x 610 x 203)	304	14	16	CP3624	CP3624G	34.20 x 22.20	869 x 564	34.50 x 22.50	876 x 572	2	1/4-turn	5.00	127
CSD36248SS6	36.00 x 24.00 x 8.00 (914 x 610 x 203)	316L	14	16	CP3624	CP3624G	34.20 x 22.20	869 x 564	34.50 x 22.50	876 x 572	2	1/4-turn	5.00	127
CSD36308SS	36.00 x 30.00 x 8.00 (914 x 762 x 203)	304	14	14	CP3630	CP3630G	34.20 x 28.20	869 x 716	34.50 x 28.50	876 x 724	2	1/4-turn	5.00	127
CSD36308SS6	36.00 x 30.00 x 8.00 (914 x 762 x 203)	316L	14	14	CP3630	CP3630G	34.20 x 28.20	869 x 716	34.50 x 28.50	876 x 724	2	1/4-turn	5.00	127

 © 2007 Hoffman Enclosures Inc.

CONCEPT® Stainless Steel Type 4X Wall-Mounted Enclosures

Standard Sizes CONCEPT® Stainless Steel Single-Door Wall-Mount Enclosures (Cont.)

Catalog Number	A x B x C in. (mm)	Stainless Steel Type	Door Ga.	Body Ga.	CONCEPT Panel Catalog Number	Conductive Panel Catalog Number	Panel Size D x E (in.)	Panel Size D x E (mm)	Mounting G x H (in.)	Mounting G x H (mm)	Latch (qty)	Latch (style)	J (in.)	J (mm)
CSD161210SS	16.00 x 12.00 x 10.00 (406 x 305 x 254)	304	16	16	CP1612	CP1612G	14.20 x 10.20	361 x 259	14.50 x 10.50	368 x 267	1	1/4-turn	8.00	203
CSD161210SS6	16.00 x 12.00 x 10.00 (406 x 305 x 254)	316L	16	16	CP1612	CP1612G	14.20 x 10.20	361 x 259	14.50 x 10.50	368 x 267	1	1/4-turn	8.00	203
CSD161610SS	16.00 x 16.00 x 10.00 (406 x 406 x 254)	304	16	16	CP1616	CP1616G	14.20 x 14.20	361 x 361	14.50 x 14.50	368 x 368	1	1/4-turn	8.00	203
CSD161610SS6	16.0 x 16.00 x 10.00 (406 x 406 x 254)	316L	16	16	CP1616	CP1616G	14.20 x 14.20	361 x 361	14.50 x 14.50	368 x 368	1	1/4-turn	8.00	203
CSD162010SS	16.00 x 20.00 x 10.00 (406 x 508 x 254)	304	16	16	CP2016	CP2016G	18.20 x 14.20	462 x 361	14.50 x 18.50	368 x 470	1	1/4-turn	8.00	203
CSD162010SS6	16.00 x 20.00 x 10.00 (406 x 508 x 254)	316L	16	16	CP2016	CP2016G	18.20 x 14.20	462 x 361	14.50 x 18.50	368 x 470	1	1/4-turn	8.00	203
CSD201610SS	20.00 x 16.00 x 10.00 (508 x 406 x 254)	304	16	16	CP2016	CP2016G	18.20 x 14.20	462 x 361	18.50 x 14.50	470 x 368	1	1/4-turn	10.00	254
CSD201610SS6	20.00 x 16.00 x 10.00 (508 x 406 x 254)	316L	16	16	CP2016	CP2016G	18.20 x 14.20	462 x 361	18.50 x 14.50	470 x 368	1	1/4-turn	10.00	254
CSD202010SS	20.00 x 20.00 x 10.00 (508 x 508 x 254)	304	16	16	CP2020	CP2020G	18.20 x 18.20	462 x 462	18.50 x 18.50	470 x 470	1	1/4-turn	10.00	254
CSD202010SS6	20.00 x 20.00 x 10.00 (508 x 508 x 254)	316L	16	16	CP2020	CP2020G	18.20 x 18.20	462 x 462	18.50 x 18.50	470 x 470	1	1/4-turn	10.00	254
CSD202410SS	20.00 x 24.00 x 10.00 (508 x 610 x 254)	304	16	16	CP2420	CP2420G	22.20 x 18.20	464 x 462	18.50 x 22.50	470 x 572	1	1/4-turn	10.00	254
CSD202410SS6	20.00 x 24.00 x 10.00 (508 x 610 x 254)	316L	16	16	CP2420	CP2420G	22.20 x 18.20	464 x 462	18.50 x 22.50	470 x 572	1	1/4-turn	10.00	254
CSD241610SS	24.00 x 16.00 x 10.00 (610 x 406 x 254)	304	16	16	CP2416	CP2416G	22.20 x 14.20	564 x 361	22.50 x 14.50	572 x 368	1	1/4-turn	12.00	305
CSD241610SS6	24.00 x 16.00 x 10.00 (610 x 406 x 254)	316L	16	16	CP2416	CP2416G	22.20 x 14.20	564 x 361	22.50 x 14.50	572 x 368	1	1/4-turn	12.00	305
CSD242010SS	24.00 x 20.00 x 10.00 (610 x 508 x 254)	304	16	16	CP2420	CP2420G	22.20 x 18.20	564 x 462	22.50 x 18.50	572 x 470	1	1/4-turn	12.00	305
CSD242010SS6	24.00 x 20.00 x 10.00 (610 x 508 x 254)	316L	16	16	CP2420	CP2420G	22.20 x 18.20	564 x 462	22.50 x 18.50	572 x 470	1	1/4-turn	12.00	305
CSD242410SS	24.00 x 24.00 x 10.00 (610 x 610 x 254)	304	14	16	CP2424	CP2424G	22.20 x 22.20	564 x 564	22.50 x 22.50	572 x 572	2	1/4-turn	5.00	127
CSD242410SS6	24.00 x 24.00 x 10.00 (610 x 610 x 254)	316L	14	16	CP2424	CP2424	22.20 x 22.20	564 x 564	22.50 x 22.50	572 x 572	2	1/4-turn	5.00	127
CSD243010SS	24.00 x 30.00 x 10.00 (610 x 762 x 254)	304	14	16	CP3024	CP3024G	28.20 x 22.20	716 x 564	22.50 x 28.50	572 x 724	2	1/4-turn	5.00	127
CSD243010SS6	24.00 x 30.00 x 10.00 (610 x 762 x 254)	316L	14	16	CP3024	CP3024G	28.20 x 22.20	716 x 564	22.50 x 28.50	572 x 724	2	1/4-turn	5.00	127
CSD302010SS	30.00 x 20.00 x 10.00 (762 x 508 x 254)	304	14	16	CP3020	CP3020G	28.20 x 18.20	716 x 462	28.50 x 18.50	724 x 470	2	1/4-turn	5.00	127
CSD302010SS6	30.00 x 20.00 x 10.00 (762 x 508 x 254)	316L	14	16	CP3020	CP3020G	28.20 x 18.20	716 x 462	28.50 x 18.50	724 x 470	2	1/4-turn	5.00	127
CSD302410SS	30.00 x 24.00 x 10.00 (762 x 610 x 254)	304	14	16	CP3024	CP3024G	28.20 x 22.20	716 x 564	28.50 x 22.50	724 x 572	2	1/4-turn	5.00	127
CSD302410SS6	30.00 x 24.00 x 10.00 (762 x 610 x 254)	316L	14	16	CP3024	CP3024G	28.20 x 22.20	716 x 564	28.50 x 22.50	724 x 572	2	1/4-turn	5.00	127
CSD303010SS	30.00 x 30.00 x 10.00 (762 x 762 x 254)	304	14	14	CP3030	CP3030G	28.20 x 28.20	716 x 716	28.50 x 28.50	724 x 724	2	1/4-turn	5.00	127
CSD303010SS6	30.00 x 30.00 x 10.00 (762 x 762 x 254)	316L	14	14	CP3030	CP3030G	28.20 x 28.20	716 x 716	28.50 x 28.50	724 x 724	2	1/4-turn	5.00	127
CSD362410SS	36.00 x 24.00 x 10.00 (914 x 610 x 254)	304	14	16	CP3624	CP3624G	34.20 x 22.20	869 x 564	34.50 x 22.50	876 x 572	2	1/4-turn	5.00	127
CSD362410SS6	36.00 x 24.00 x 10.00 (914 x 610 x 254)	316L	14	16	CP3624	CP3624G	34.20 x 22.20	869 x 564	34.50 x 22.50	876 x 572	2	1/4-turn	5.00	127
CSD363010SS	36.00 x 30.00 x 10.00 (914 x 762 x 254)	304	14	14	CP3630	CP3630G	34.20 x 28.20	869 x 716	34.50 x 28.50	876 x 724	2	1/4-turn	5.00	127
CSD363010SS6	36.00 x 30.00 x 10.00 (914 x 762 x 254)	316L	14	14	CP3630	CP3630G	34.20 x 28.20	869 x 716	34.50 x 28.50	876 x 724	2	1/4-turn	5.00	127
CSD482410SS	48.00 x 24.00 x 10.00 (1220 x 610 x 254)	304	14	14	CP4824	CP4824G	46.20 x 22.20	1173 x 564	46.50 x 22.50	1181 x 572	1	3-point	24.00	610
CSD482410SS6	48.00 x 24.00 x 10.00 (1220 x 610 x 254)	316L	14	14	CP4824	CP4824G	46.20 x 22.20	1173 x 564	46.50 x 22.50	1181 x 572	1	3-point	24.00	610

 © 2007 Hoffman Enclosures Inc.

CONCEPT® Stainless Steel Type 4X Wall-Mounted Enclosures

Standard Sizes CONCEPT® Stainless Steel Single-Door Wall-Mount Enclosures (Cont.)

Catalog Number	A x B x C in. (mm)	Stainless Steel Type	Door Ga.	Body Ga.	CONCEPT Panel Catalog Number	Conductive Panel Catalog Number	Panel Size D x E (in.)	Panel Size D x E (mm)	Mounting G x H (in.)	Mounting G x H (mm)	Latch (qty)	Latch (style)	J (in.)	J (mm)
CSD202012SS	20.00 x 20.00 x 12.00 (508 x 508 x 305)	304	14	14	CP2020	CP2020G	18.20 x 18.20	462 x 462	18.50 x 18.50	470 x 470	1	1/4-turn	10.00	254
CSD202012SS6	20.00 x 20.00 x 12.00 (508 x 508 x 305)	316L	14	14	CP2020	CP2020G	18.20 x 18.20	462 x 462	18.50 x 18.50	470 x 470	1	1/4-turn	10.00	254
CSD242412SS	24.00 x 24.00 x 12.00 (610 x 610 x 305)	304	14	14	CP2424	CP2424G	22.20 x 22.20	564 x 564	22.50 x 22.50	572 x 572	2	1/4-turn	5.00	127
CSD242412SS6	24.00 x 24.00 x 12.00 (610 x 610 x 305)	316L	14	14	CP2424	CP2424G	22.20 x 22.20	564 x 564	22.50 x 22.50	572 x 572	2	1/4-turn	5.00	127
CSD302412SS	30.00 x 24.00 x 12.00 (762 x 610 x 305)	304	14	14	CP3024	CP3024G	28.20 x 22.20	716 x 564	28.50 x 22.50	724 x 572	2	1/4-turn	5.00	127
CSD302412SS6	30.00 x 24.00 x 12.00 (762 x 610 x 305)	316L	14	14	CP3024	CP3024G	28.20 x 22.20	716 x 564	28.50 x 22.50	724 x 572	2	1/4-turn	5.00	127
CSD362412SS	36.00 x 24.00 x 12.00 (914 x 610 x 305)	304	14	14	CP3624	CP3624G	34.20 x 22.20	869 x 564	34.50 x 22.50	876 x 572	2	1/4-turn	5.00	127
CSD362412SS6	36.00 x 24.00 x 12.00 (914 x 610 x 305)	316L	14	14	CP3624	CP3624G	34.20 x 22.20	869 x 564	34.50 x 22.50	876 x 572	2	1/4-turn	5.00	127
CSD363012SS	36.00 x 30.00 x 12.00 (914 x 762 x 305)	304	14	14	CP3630	CP3630G	34.20 x 28.20	869 x 716	34.50 x 28.50	876 x 724	2	1/4-turn	5.00	127
CSD363012SS6	36.00 x 30.00 x 12.00 (914 x 762 x 305)	316L	14	14	CP3630	CP3630G	34.20 x 28.20	869 x 716	34.50 x 28.50	876 x 724	2	1/4-turn	5.00	127

Purchase panels separately.
Optional NEMA style steel and stainless steel panels require conversion kit catalog number CCPM4.

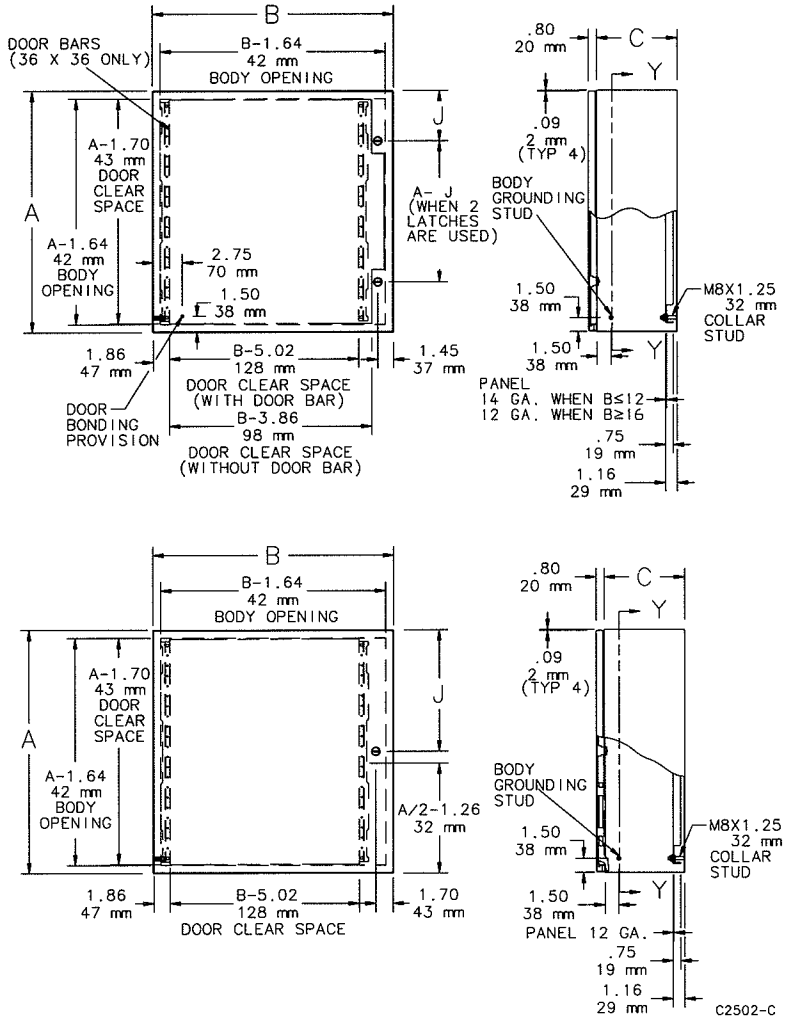

 © 2007 Hoffman Enclosures Inc.

CONCEPT® Stainless Steel Type 4X Wall-Mounted Enclosures

Standard Sizes CONCEPT® Stainless Steel Single-Door Wall-Mounted Enclosures with Windows

Type 304 Catalog Number	Door Ga.	Body Ga.	A x B x C in. (mm)	CONCEPT Panel Catalog Number	Conductive Panel Catalog Number	Panel Size D x E (in.)	Panel Size D x E (mm)	Mtg. G x H (in.)	Mtg. G x H (mm)	Window Size M x N (in.)	Window Size M x N (mm)	Latch qty	Latch style	J in. (mm)
CSD12126WSS	16	16	12.00 x 12.00 x 6.00 (305 x 305 x 152)	**CP1212**	**CP1212G**	10.20 x 10.20	259 x 259	10.50 x 10.50	267 x 267	8.74 x 7.10	222 x 180	1	1/4-turn	6.00 (152)
CSD16126WSS	16	16	16.00 x 12.00 x 6.00 (406 x 305 x 152)	**CP1612**	**CP1612G**	14.20 x 10.20	361 x 259	14.50 x 10.50	368 x 267	12.74 x 7.10	324 x 180	1	1/4-turn	8.00 (203)
CSD20166WSS	16	16	20.00 x 16.00 x 6.00 (508 x 406 x 152)	**CP2016**	**CP2016G**	18.20 x 14.20	462 x 361	18.50 x 14.50	470 x 368	16.74 x 11.10	425 x 282	1	1/4-turn	10.00 (254)
CSD20206WSS	16	16	20.00 x 20.00 x 6.00 (508 x 508 x 152)	**CP2020**	**CP2020G**	18.20 x 18.20	462 x 462	18.50 x 18.50	470 x 470	16.74 x 15.10	425 x 384	1	1/4-turn	10.00 (254)
CSD20168WSS	16	16	20.00 x 16.00 x 8.00 (508 x 406 x 203)	**CP2016**	**CP2016G**	18.20 x 14.20	462 x 361	18.50 x 14.50	470 x 368	16.74 x 11.10	425 x 282	1	1/4-turn	10.00 (254)
CSD20208WSS	16	16	20.00 x 20.00 x 8.00 (508 x 508 x 203)	**CP2020**	**CP2020G**	18.20 x 18.20	462 x 462	18.50 x 18.50	470 x 470	16.74 x 15.10	425 x 384	1	1/4-turn	10.00 (254)
CSD24208WSS	16	16	24.00 x 20.00 x 8.00 (610 x 508 x 203)	**CP2420**	**CP2420G**	22.20 x 18.20	564 x 462	22.50 x 18.50	572 x 470	20.74 x 15.10	527 x 384	1	1/4-turn	12.00 (305)
CSD24248WSS	14	16	24.00 x 24.00 x 8.00 (610 x 610 x 203)	**CP2424**	**CP2424G**	22.20 x 22.20	564 x 564	22.50 x 22.50	572 x 572	20.74 x 17.68	527 x 449	2	1/4-turn	5.00 (127)
CSD30248WSS	14	16	30.00 x 24.00 x 8.00 (762 x 610 x 203)	**CP3024**	**CP3024G**	28.20 x 22.20	716 x 564	28.50 x 22.50	724 x 572	26.74 x 17.68	679 x 449	2	1/4-turn	5.00 (127)
CSD161210WSS	16	16	16.00 x 12.00 x 10.00 (406 x 305 x 203)	**CP1612**	**CP1612G**	14.20 x 10.20	361 x 259	14.50 x 10.50	368 x 267	12.74 x 7.10	324 x 180	1	1/4-turn	8.00 (203)
CSD201610WSS	16	16	20.00 x 16.00 x 10.00 (508 x 406 x 203)	**CP2016**	**CP2016G**	18.20 x 14.20	462 x 361	18.50 x 14.50	470 x 368	16.74 x 11.10	425 x 282	1	1/4-turn	10.00 (254)
CSD202010WSS	16	16	20.00 x 20.00 x 10.00 (508 x 508 x 203)	**CP2020**	**CP2020G**	18.20 x 18.20	462 x 462	18.50 x 18.50	470 x 470	16.74 x 15.10	425 x 384	1	1/4-turn	10.00 (254)
CSD242010WSS	16	16	24.00 x 20.00 x 10.00 (610 x 508 x 203)	**CP2420**	**CP2420G**	22.20 x 18.20	564 x 462	22.50 x 18.50	572 x 470	20.74 x 15.10	527 x 384	1	1/4-turn	12.00 (305)
CSD242410WSS	14	16	24.00 x 24.00 x 10.00 (610 x 610 x 203)	**CP2424**	**CP2424G**	22.20 x 22.20	564 x 564	22.50 x 22.50	572 x 572	20.74 x 17.68	527 x 449	2	1/4-turn	5.00 (127)
CSD302410WSS	14	16	30.00 x 24.00 x 10.00 (762 x 610 x 203)	**CP3024**	**CP3024G**	28.20 x 22.20	716 x 564	28.50 x 22.50	724 x 572	26.74 x 17.68	679 x 449	2	1/4-turn	5.00 (127)
CSD202012WSS	14	16	20.00 x 20.00 x 12.00 (508 x 508 x 305)	**CP2020**	**CP2020G**	18.20 x 18.20	462 x 462	18.50 x 18.50	470 x 470	16.74 x 15.10	425 x 384	1	1/4-turn	10.00 (254)
CSD302412WSS	14	16	30.00 x 24.00 x 12.00 (762 x 610 x 305)	**CP3024**	**CP3024G**	28.20 x 22.20	716 x 564	28.50 x 22.50	724 x 572	26.74 x 17.68	679 x 449	2	1/4-turn	5.00 (127)

Purchase panels separately.
Optional NEMA style steel and stainless steel panels require conversion kit catalog number CCPM4.

 © 2007 Hoffman Enclosures Inc.

CONCEPT® Stainless Steel Type 4X Wall-Mounted Enclosures

CONCEPT® Stainless Steel Single-Door Wall-Mount Enclosures with Windows

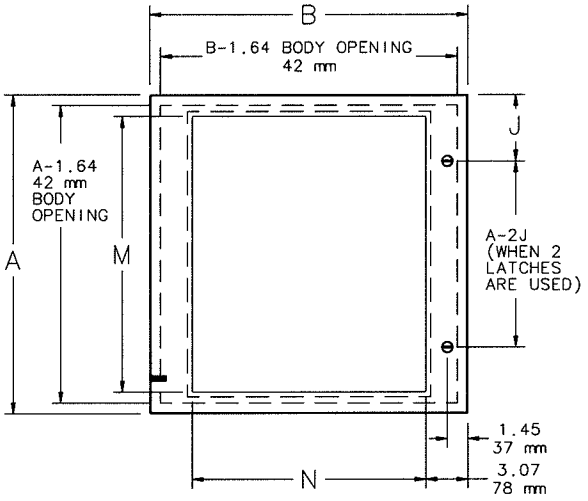

Window Door Enclosure with Quarter-turn Latches

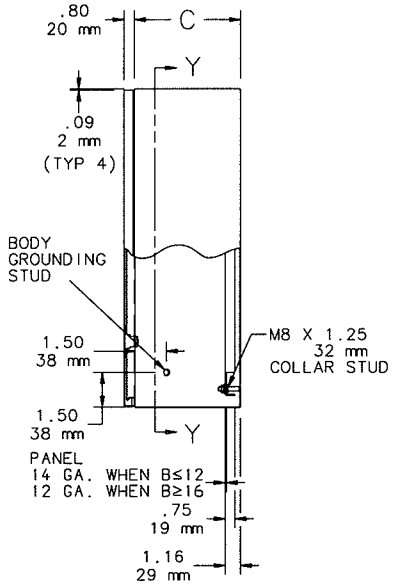

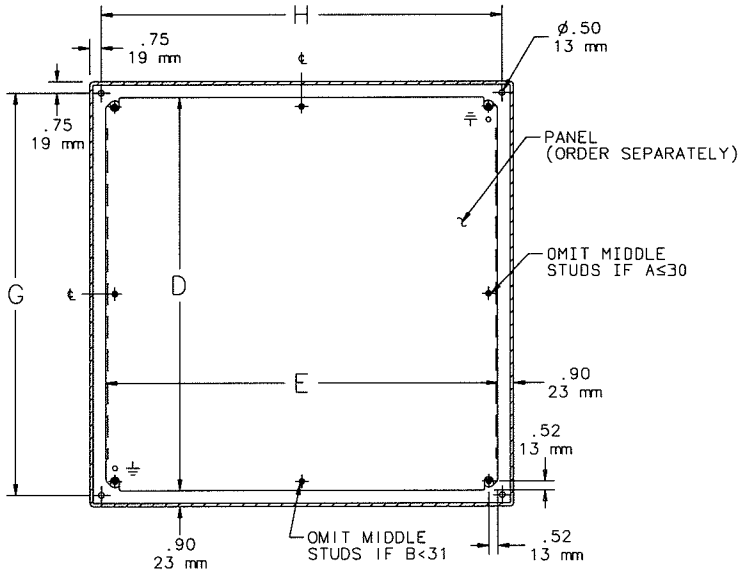

SECTION Y-Y
(WITH PANEL INSTALLED)

C2503-C

 © 2007 Hoffman Enclosures Inc.

Screw-Cage Clamp Connection DIN Rail Mount Terminal Blocks

For over 50 years, screw-cage clamp connection technology has provided safe, reliable and efficient wire terminations for control, power distribution, process and instrumentation applications. Screw-Cage clamp terminal blocks require no special wire preparation or complicated tools. Simply strip the wire, insert into the pre-opened clamp and tighten the screw to the prescribed torque for a gas tight, vibration proof, connection every time. Now the industry standard, screw-cage clamp terminal blocks provide space saving, wiring densities up to 180 terminations per foot. Blocks easily snap-on standard DIN Rail for rapid completion of terminal assemblies. Choose from feed-through, fuse, high current, ground disconnect, indicator, thermocouple and (3) wire sensor terminal block types. All functions can be mixed or matched and combined with other control components on the same mounting rail. A wide conductor range (22 AWG-500 MCM) can be accommodated and blocks with electrical ratings up to 370A and 600V are available.

Ground Terminal Blocks • Side Wire Entry • Mount on 35mm DIN Rail • Modular Design • Polyamide 6.6 • Standard Color: Green/Yellow	**SLN 2.5/35** 6mm (.236 in.) Width *Low Height Design*	**SL 2.5/35** 6mm (.236 in.) Width	**SL 4/35** 8mm (.315 in.) Width	**SL 10/35** 10mm (.394 in.) Width
	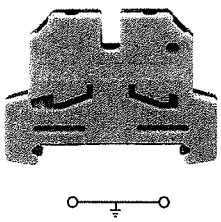	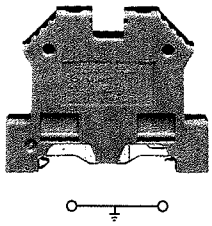	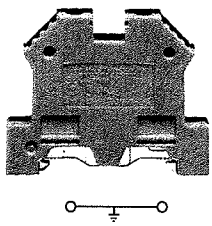	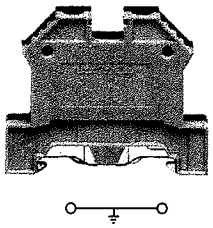
Dimensions: BxWxH† mm (in.)	52x6x39 (2.05x.236x1.54)	52x6x47 (2.05x2.36x1.85)	56x8x47 (2.20x.315x1.85)	56x10x47 (2.20x.394x1.85)
Ordering Information:	**Cat.No. 1058.2** Std.Pack 100	**Cat.No. 1056.2** Std.Pack 100	**Cat.No. 1212.2** Std.Pack 100	**Cat.No. 1213.2** Std.Pack 80
Electrical Ratings:				
IEC 947-7-1	0.2-2.5mm²	0.2-2.5mm²	0.2-4mm²	0.2-10mm²
CSA/CUL File No. LR 42110	22-12 AWG	22-12 AWG	22-10 AWG	20-6 AWG
VDE File No. E95701	22-12 AWG	22-12 AWG	22-10 AWG	20-6 AWG
Insulation Stripping Length mm (in.)	10 (.394)	10 (.394)	12 (.472)	10 (.394)
Tightening Torque* Nm (lbf.-in.)	.65 (5.5)	.65 (5.5).	.85 (7.5)	1.5 (13.0)
Tightening Torque** Nm (lbf.-in.)	.65 (5.5)	.65 (5.5)	.85 (7.5)	1.5 (13.0)
Screw Hole Diameter mm (in.)	4 (.16)	4 (.16)	4 (.16)	4 (.16)
Accessories ††:				

Ground Terminal Blocks • Side Wire Entry • Mount on 35mm DIN Rail • Modular & Sectional Designs • Single Level and Multi-Connection • Polyamide 6.6 • Standard Color: Green/Yellow	**SL 16/35N** 12mm (.512 in.) Width *Low Height Design*	**SL 35/35N** 16mm (.630 in.) Width *Low Height Design*	**SL 2.5/35 ZR** 6mm (.236 in.) Width *Sectional, Multi-Connection*	**SL 2.5/35 ZRL** 6mm (.236 in.) Width *Sectional, Multi-Connection*
	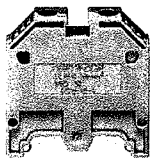	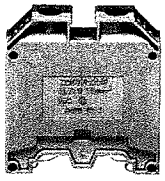	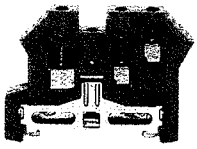	
	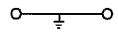	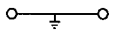	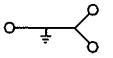	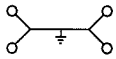
Dimensions: BxWxH† mm (in.)	50x12x53 1.97x.512x2.09)	58x16x63 (2.28x.630x2.48)	62.5x6x47 (2.46x.236x1.85)	67x6x47 (2.64x.236x1.85)
Ordering Information:	**Cat.No. 1533.2** Std.Pack 50	**Cat.No. 1534.2** Std.Pack 20	**Cat.No. 1060.2** Std.Pack 100	**Cat.No. 1062.2** Std.Pack 100
Electrical Ratings:				
IEC 947-7-1	2.5-16mm²	2.5-35mm²	0.2-2.5mm²	0.2-2.5mm²
CSA File No. LR 42110 Ø	10-4 AWG	10-2 AWG	22-12 AWG	22-12 AWG
VDE; C/US File No. E95701Ø	10-4 AWG	10-2 AWG	22-12 AWG	22-12 AWG
Insulation Stripping Length mm (in.)	12 (.512)	20 (.787)	10 (.394)	10 (.394))
Tightening Torque* Nm (lbf.-in.)	1.5 (13.0)	4.2 (37.0)	.65 (5.5)	.65 (5.5)
Tightening Torque** Nm (lbf.-in.)	1.5 (13.0)	3.2 (28.0)	.65 (5.5)	.65 (5.5)
Screw Hole Diameter mm (in.)	6 (.24)	7 (.28)	4 (.16)	4 (.16
Accessories ††:				
End Plate			Cat.No. 2754.1 Std.Pack 20	Cat.No. 2575.1 Std.Pack 20
End Stop			Cat.No. 2826.2 Std.Pack 50	Cat.No. 2826.2 Std.Pack 50

† Height Dimension when mounted on 35 x 7.5mm DIN Rail
†† For DIN Rail, marking tags and additional Accessories, See Pages XX-XX
* Screw-Cage Clamp Screws
** Center Mounting Screw
Ø Pending

Screw-Cage Clamp Connection DIN Rail Mount Terminal Blocks

For over 50 years, screw-cage clamp connection technology has provided safe, reliable and efficient wire terminations for control, power distribution, process and instrumentation applications. Screw-cage clamp terminal blocks require no special wire preparation or complicated tools. Simply strip the wire, insert into the pre-opened clamp and tighten the screw to the prescribed torque for a gas tight, vibration proof, connection every time. Now the industry standard, screw-cage clamp terminal blocks provide space saving, wiring densities up to 180 terminations per foot. Blocks easily snap-on standard DIN Rail for rapid completion of terminal assemblies. Choose from feed-through, fuse, high current, ground, disconnect, indicator, thermocouple and (3) wire sensor terminal block types. All functions can be mixed or matched and combined with other control components on the same mounting rail. A wide conductor range (22 AWG-500 MCM) can be accommodated and blocks with electrical ratings up to 370A and 600V are available.

Feed-Through Terminal Blocks

- Side Wire Entry
- Sectional Design
- Mount on 35/32mm DIN Rail or 35mm DIN Rail
- Polyamide 6.6
- Standard Color: Beige

	SRK 2.5 5mm (.197 in.) Width *Narrow Top Design*	**RK 1.5-4** 6mm (.236 in.) Width *Narrow Top Design*	**RK 2.5** 5mm (.197 in.) Width	**RK 2.5/35N/2Q**** 5mm (.197 in.) Width *Dual Plug-In Jumper Provision*
	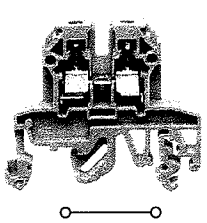	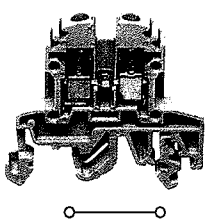	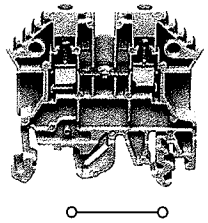	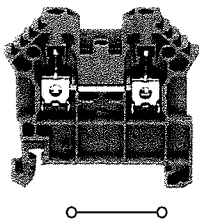
Dimensions: BxWxH † mm (in.)	45x5x39 (1.77x.197x1.54)	45x6x43 (1.77x.236x1.69)	48x5x47 (1.89x.197x1.85)	48x5x47 (1.89x.197x1.85)
Ordering Information:	**Cat.No. 1030.2** Std.Pack 100	**Cat.No. 1015.2** Std.Pack 100	**Cat.No. 1296.2** Std.Pack 100	**Cat.No. 1574.2** Std.Pack 100
Electrical Ratings:				
IEC 947-7-1	500V / 24A/ 0.2-2.5mm²	500V / 32A / 0.2-4.0mm²	800V / 24A / 0.2-2.5mm²	800V / 24A / 0.2-2.5mm²
CSA/CUL File No. LR 42110	300V / 20A / 22-14 AWG	300V / 40A / 20-12 AWG	600V / 20A / 22-12 AWG	600 V / 20A / 22-12 AWG*
; C/US File No. E95701	300V / 20A / 22-14 AWG	300V / 30A / 22-10 AWG	600V / 20A / 22-12 AWG	600 V / 20A / 22-12 AWG*
Insulation Stripping Length mm (in.)	7 (.28)	9 (.35)	7 (.28)	7 (.28)
Tightening Torque Nm (lbf.-in.)	.65 (5.5)	.85 (7.5)	.65 (5.5)	.65 (5.5)
Screw Hole Diameter mm (in.)	3 (.12)	3.5 (.14)	3 (.12)	3 (.12)
Accessories ††:				
End Plate	Cat.No. 2070.2 Std.Pack 50	Cat.No. 2738.2 Std.Pack 50	Cat.No. 2001.2 Std.Pack 50	Cat.No. 2001.2 Std.Pack 50
End Stop	Cat.No. 2005.2 Std.Pack 50	Cat.No. 2005.2 Std.Pack 50	Cat.No. 2005.2 Std.Pack 50	Cat.No. 2005.2 Std.Pack 50
Internal Jumpers:				
2 Pole	Cat.No. 2422.0 Std.Pack 50	Cat.No. 2087.0 Std.Pack 50	Cat.No. 2567.0 Std.Pack 50	Cat.No. 3710.8 Std.Pack 50
3 Pole	Cat.No. 2423.0 Std.Pack 50	Cat.No. 2088.0 Std.Pack 50	Cat.No. 2568.0 Std.Pack 50	Cat.No. 3711.8 Std.Pack 50
4 Pole	Cat.No. 2424.0 Std.Pack 20	Cat.No. 2089.0 Std.Pack 20	Cat.No. 2569.0 Std.Pack 20	Cat.No. 3712.8 Std.Pack 20
10 Pole	Cat.No. 2425.0 Std.Pack 10	Cat.No. 2090.0 Std.Pack 10	Cat.No. 2570.0 Std.Pack 10	Cat.No. 3718.8 Std.Pack 10

Feed Through Terminal Blocks

- Side Wire Entry
- Sectional/Modular Design
- Mount on 35/32mm DIN Rail or 35mm DIN Rail
- Polyamide 6.6
- Standard Color: Beige

	RK 2.5-4 6mm (.236 in.) Width	**RK 6-10** 8mm (.315 in.) Width	**RK 16/35N** 12mm (.472 in.) Width *Modular Low Height Design*	**RK 35/35N** 16mm (.630 in.) Width *Modular Low Height Design*
	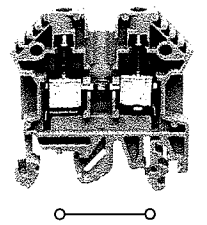	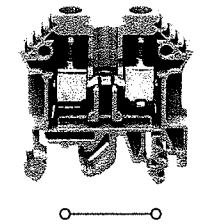	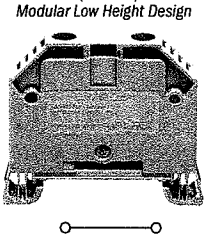	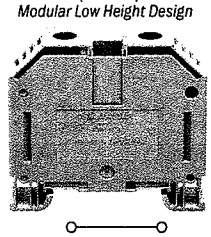
Dimensions: BxWxH † mm (in.)	48x6x47 (1.89x.236x1.85)	48x8x47 (1.89x.315x1.85)	59.8x12x47 (2.16x.472x1.85)	58x16x51.5 (2.28x.629x2.03)
Ordering Information:	**Cat.No. 1001.2** Std.Pack 100	**Cat.No. 1005.2** Std.Pack 100	**Cat.No. 1511.2** Std.Pack 50	**Cat.No. 1512.2** Std.Pack 20
Electrical Ratings:				
IEC 947-7-1	800V / 32A / 0.2-4.0mm²	800V / 57A / 0.2-10mm²	800V / 76A / 2.5-16mm²	800V / 125A / 2.5-35mm²
CSA File No. LR 42110	600V / 40A / 22-10 AWG	600V / 65A / 22-6 AWG*	600V / 85A / 12-4 AWG*	600V / 115A / 12-2 AWG*
; C/US File No. E95701	600V / 40A / 22-10 AWG	600V / 65A / 22-6 AWG*	600V / 85A / 12-4 AWG*	600V / 85A / 12-2 AWG*
Insulation Stripping Length mm (in.)	12 (.47)	12 (.47)	15 (.59)	20 (.79)
Tightening Torque Nm (lbf.-in.)	.85 (7.5)	1.5 (13.0)	2.3 (20.0)	4.5 (40.0)
Screw Hole Diameter mm (in.)	4 (.16)	6 (.24)	6 (.24)	8 (.32)
Accessories†† :				
End Plate	Cat.No. 2001.2 Std.Pack 50	Cat.No. 2001.2 Std.Pack 50		
End Stop	Cat.No. 2826.2 Std.Pack 50	Cat.No. 2826.2 Std.Pack 50	Cat.No. 2828.0 Std.Pack 50	Cat.No. 2828.0 Std.Pack 50
Internal Jumpers:				
2 Pole	Cat.No. 2019.0 Std.Pack 50	Cat.No. 2060.0 Std.Pack 50	Cat.No. 2257.0 Std.Pack 20	Cat.No. 2164.0 Std.Pack 20
3 Pole	Cat.No. 2020.0 Std.Pack 50	Cat.No. 2061.0 Std.Pack 50	Cat.No. 2258.0 Std.Pack 20	Cat.No. 2165.0 Std.Pack 20
4 Pole	Cat.No. 2021.0 Std.Pack 20	Cat.No. 2062.0 Std.Pack 20	Cat.No. 2265.0 Std.Pack 10	Cat.No. 2166.0 Std.Pack 10
10 Pole	Cat.No. 2022.0 Std.Pack 10	Cat.No. 2063.0 Std.Pack 10	Cat.No. 2266.0 Std.Pack 10	Cat.No. 2176.0 Std.Pack 10

† Height Dimension when mounted on 35 x 7.5mm DIN Rail

†† For DIN Rail, marking tags and additional accessories, See Pages XX-XX

* Pending

** Also available with Shield Bar Connection; Order Cat.No. 1575.2, Type RK 2.5/35N/S/2Q

The variations **TRK 1.5** (blade disconnect terminal) and **TRK 1.5/DS** (disconnect plug) are available.

Characteristics of the TRK 1.5/TRK 1.5 DS

- Same construction as standard terminal blocks
- Robust, closed insulating terminal carrier
- Tried and tested blade disconnect system with high surface quality
- Low and stable transitional resistance

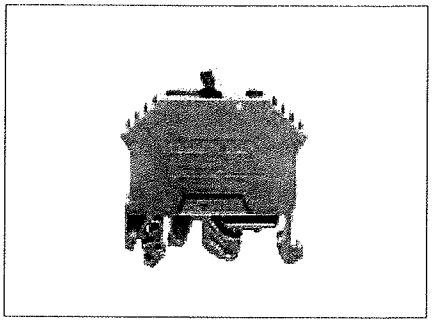

The models **TRK 1.5/STB** and **TRK 1.5/15/STB** offer the advantage that jack plugs are pre-installed in place of terminal screws. Without requiring any other accessories, these disconnect terminals can offer a measurement or test pick-up for finding faulty quickly, or as a measurement pick-up for equalizing standardized signals.

Characteristics of the TRK 1.5/STB and TRK 1.5/15/STB

- Same construction as standard terminal blocks
- Robust, closed insulating terminal carrier
- Tried and tested blade disconnect system with high surface quality
- Low and stable transitional resistance
- Contact protection even during the disconnection process

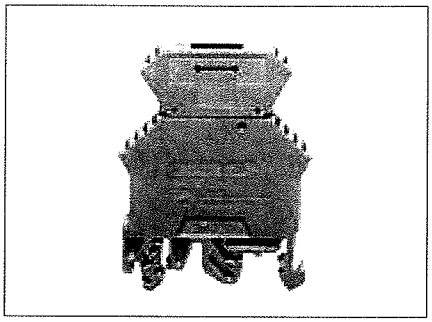

Disconnect plugs and diode plugs of the **TRK 1.5/DS** are available individually in four models.

Disconnect plugs without switch
DS 1-TRK 1.5 (Order No. 1403.2)
Disconnect plugs with wire bridge
DS 1-TRK 1.5 (Order No. 1400.2)
Disconnect plugs with diode in closed direction
DS 1-TRK 1.5 (Order No. 1401.2)
Disconnect plugs with diode in open direction
DS 1-TRK 1.5 (Order No. 1402.2)

The series **TK 2** and **STK 2.../K** have a disconnect lever as a disconnecting element which is equipped with a contact sleeve.

Characteristics of the TRK 1.5/TRK 1.5 DS

- Same construction as standard terminal blocks
- Disconnect lever can be lifted and locked in final position
- Disconnect terminals can be used as fuse disconnect terminals by removing the contact sleeves

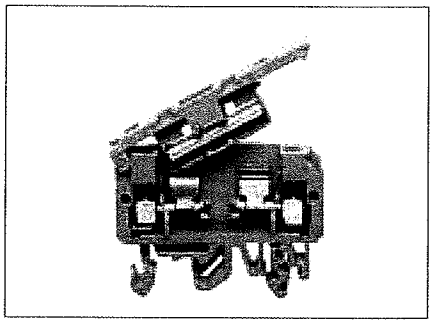

- *P.C.B. or plug-in mount*
- *AC, DC, sensitive DC or single bistable coil versions available*
- *8 mm, 6 kV (1.2/50 µs) between coil and contacts*
- *Ambient temperature + 85 °C*
- *RT III (wash tight) version available*
- *Sockets and accessories: see 95, 99 and 86 series*

	40.31	40.51	40.52
	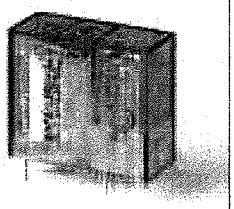	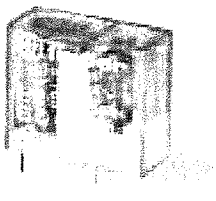	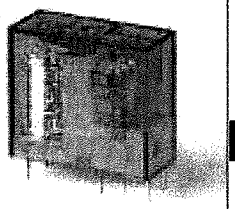
	- 1 pole, 10 A - 3.5 mm pinning - P.C.B./for use with 95 series sockets	- 1 pole, 10 A - 5 mm pinning - P.C.B./for use with 95 series sockets	- 2 pole, 8 A - 5 mm pinning - P.C.B./for use with 95 series sockets
	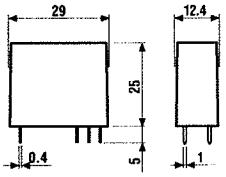	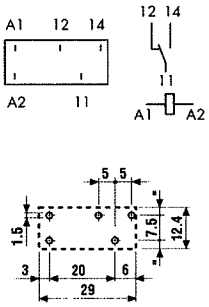	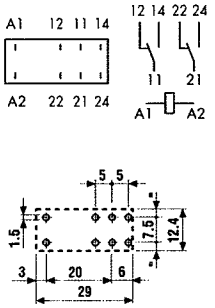
* For 400 V applications, where requirements for pollution degree 2 are met.	Copper side view	Copper side view	Copper side view
Contact specifications			
Contact configuration	1 CO (SPDT)	1 CO (SPDT)	2 CO (DPDT)
Rated current/Maximum peak current A	10/20	10/20	8/15
Rated voltage/Maximum switching voltage V AC	250/400*	250/400*	250/250
Rated load in AC1 VA	2,500	2,500	2,000
Rated load in AC15 (230 V AC) VA	500	500	400
Single phase motor rating (230 V AC) kW	0.37	0.37	0.3
Breaking capacity in DC1: 30/110/220 V A	10/0.3/0.12	10/0.3/0.12	8/0.3/0.12
Minimum switching load mW (V/mA)	300 (5/5)	300 (5/5)	300 (5/5)
Standard contact material	AgNi	AgNi	AgNi
Coil specifications			
Nominal voltage (U_N) V AC (50/60 Hz)	6 - 12 - 24 - 48 - 60 - 110 - 120 - 230 - 240		
V DC	5 - 6 - 7 - 9 - 12 - 14 - 18 - 21 - 24 - 28 - 36 - 48 - 60 - 90 - 110 - 125		
Rated power AC/DC/sens. DC VA (50 Hz)/W/W	1.2/0.65/0.5	1.2/0.65/0.5	1.2/0.65/0.5
Operating range AC	(0.8...1.1)U_N	(0.8...1.1)U_N	(0.8...1.1)U_N
DC/sens. DC	(0.73...1.5)U_N/(0.73...1.75)U_N	(0.73...1.5)U_N/(0.73...1.75)U_N	(0.73...1.5)U_N/(0.73...1.75)U_N
Holding voltage AC/DC	0.8 U_N /0.4 U_N	0.8 U_N /0.4 U_N	0.8 U_N /0.4 U_N
Must drop-out voltage AC/DC	0.2 U_N /0.1 U_N	0.2 U_N /0.1 U_N	0.2 U_N /0.1 U_N
Technical data			
Mechanical life AC/DC cycles	10 · 10⁶/20 · 10⁶	10 · 10⁶/20 · 10⁶	10 · 10⁶/20 · 10⁶
Electrical life at rated load AC1 cycles	200 · 10³	200 · 10³	100 · 10³
Operate/release time ms	7/3 - (12/4 sensitive)	7/3 - (12/4 sensitive)	7/3 - (12/4 sensitive)
Insulation according to EN 61810-1 ed. 2	4 kV/3	4 kV/3	4 kV/2
Insulation between coil and contacts (1.2/50 µs) kV	6 (8 mm)	6 (8 mm)	6 (8 mm)
Dielectric strength between open contacts V AC	1,000	1,000	1,000
Ambient temperature range °C	–40...+85	–40...+85	–40...+85
Envirommental protection	RT II**	RT II**	RT II**
Approvals (according to type):	CE ABS GOST RINA		

** See page 202 "Guidelines for automatic flow solder processes".

95.85.3

Approvals (according to type):

GOST

Relay type	44.52, 44.62	
Colour	BLUE	BLACK
Clamp terminal socket: panel or 35 mm rail (EN 50022) mount retaining clip 095.91.3 supplied with socket packaging code SPA	95.85.3	95.85.30
Metal retaining clip	095.71	
Plastic retaining and release clip	095.91.3	
8-way jumper link	095.08	095.08.0
Modules (see table below)	99.80	
Sheet of marker tags for retaining and release clip 095.91.3	060.72	

- Rated values: 10 A - 250 V
- Insulation: ≥ 6 kV (1.2/50 µs) *between coil and contacts*
- Protection category: IP 20
- Ambient temperature: (–40...+70)°C
- Screw torque: 0.5 Nm
- Wire strip length: 7 mm
- Max wire size:

	solid wire	stranded wire
mm²	1x6 / 2x2.5	1x4 / 2x2.5
AWG	1x10 / 2x14	1x12 / 2x14

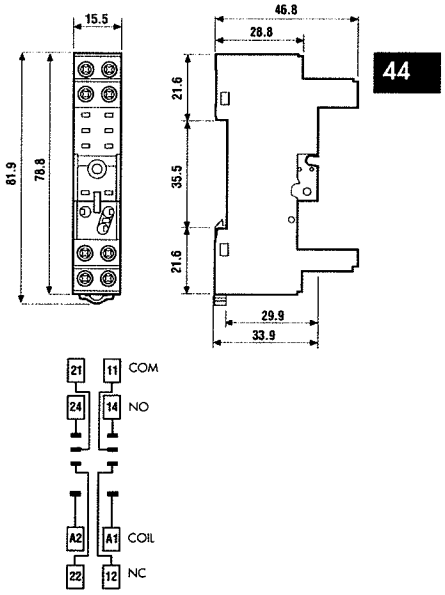

095.91.3

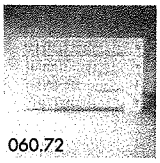

060.72

FOR 95.85.3 SOCKET:

095.08

8-way jumper link	095.08

- Rated values: 10 A - 250 V

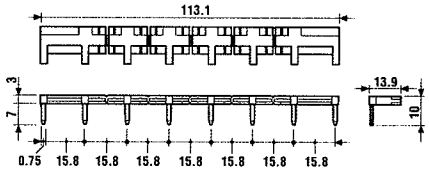

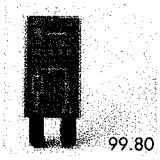

99.80

Approvals (according to type):

GOST

* Modules in Black housing are available on request.

**For DC supply, apply the positive to terminal A1.

99.80 coil indication and EMC suppression modules (see technical data page 209)		BLUE*
Diode** (+A1, standard polarity)	(6...220)V DC	99.80.3.000.00
LED	(6...24)V DC/AC	99.80.0.024.59
LED	(28...60)V DC/AC	99.80.0.060.59
LED	(110...240)V DC/AC	99.80.0.230.59
LED + Diode** (+A1, standard polarity)	(6...24)V DC	99.80.9.024.99
LED + Diode** (+A1, standard polarity)	(28...60)V DC	99.80.9.060.99
LED + Diode** (+A1, standard polarity)	(110...220)V DC	99.80.9.220.99
LED + Varistor	(6...24)V DC/AC	99.80.0.024.98
LED + Varistor	(28...60)V DC/AC	99.80.0.060.98
LED + Varistor	(110...240)V DC/AC	99.80.0.230.98
RC circuit	(6...24)V DC/AC	99.80.0.024.09
RC circuit	(28...60)V DC/AC	99.80.0.060.09
RC circuit	(110...240)V DC/AC	99.80.0.230.09
Residual current by-pass (62 kΩ/1W)	(110...240)V AC	99.80.8.230.07

Green LED is standard.
Red LED available on request.

Catalog
September

2005

QOU Miniature Circuit Breakers and Switches

Unit Mount (Cable-in/Cable-out)

Class 720

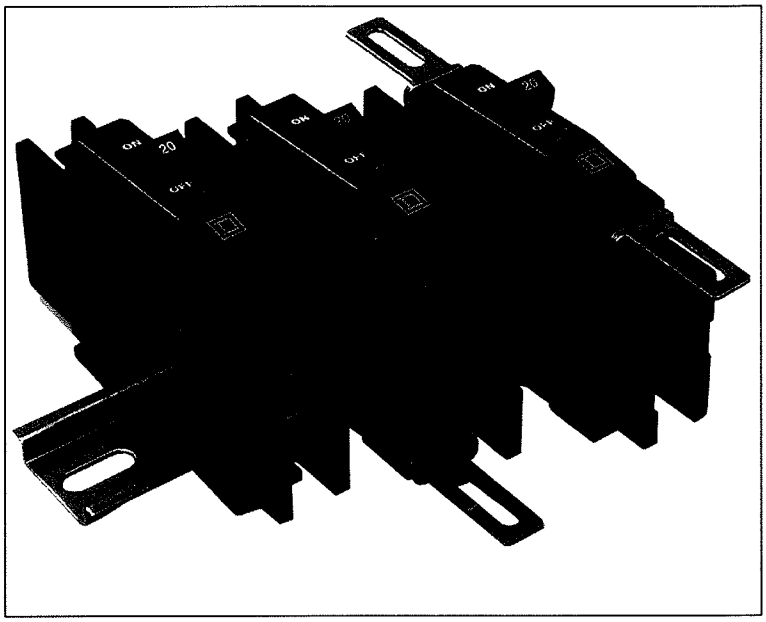

CONTENTS

Description ..... **Page**

Application Information ..... page 2
Accessories ..... page 12
UL Requirements ..... page 17
Circuit Breaker Tripping Characteristics (Trip Curves) ..... page 19
Dimensions ..... page 28
QYU One-Pole 277 Vac Supplementary Protectors ..... page 30

Table 1: Selection Data

Rating	Catalog Number						Terminal Lug Wire Size (AWG)
	One-Pole		Two-Pole			Three-Pole	
	120/240 Vac		120/240 Vac	240 Vac	120/240 Vac	240 Vac	
	10K AIR	22K AIR	10 K AIR		22K AIR	10K AIR	
10 A	QOU110	—	QOU210	—		QOU310	
15 A	QOU115*	QOU115VH	QOU215*	QOU215H*	QOU215VH	QOU315*	
15 A	QOU115HM*†	—	—	—		—	
20A	QOU120*	QOU120VH	QOU220*	QOU220H*	QOU220VH	QOU320*	
20 A	QOU120HM*†	—	—	—		—	
25 A	QOU125*	QOU125VH	QOU225*	QOU225H*	QOU225VH	QOU325*	1—#14–#2
30 A	QOU130*	QOU130VH	QOU230*	QOU230H*	QOU230VH	QOU330*	Cu or Al
35 A	QOU135*	QOU135VH	QOU235*	—	QOU235VH	QOU335*	
40 A	QOU140*	QOU140VH	QOU240*	—	QOU240VH	QOU340*	
45 A	QOU145*	QOU145VH	QOU245*	—	QOU245VH	QOU345*	
50 A	QOU150*	QOU150VH	QOU250*	—	QOU250VH	QOU350*	
60 A	QOU160*	QOU160VH	QOU260*	—	QOU260VH	QOU360*	
70 A	QOU170*	—	QOU270*	—	—	QOU370‡	
80 A	QOU180‡	—	QOU280‡	—	—	QOU380‡	
90 A	QOU190‡	—	QOU290‡	—	—	QOU390‡	1—#12–#2/0
100 A	QOU1100‡	—	QOU2100‡	—	—	QOU3100‡	Cu or Al
125 A	—	—	QOU2125‡	—	—	—	
Switch—60 Amperes Max.—240 Vac				QOU200		QOU300	1—#14–#2
Switch—100 Amperes Max.—240 Vac				QOU2000‡		QOU3000‡	1—#12–#2/0
Switch—125 Amperes Max.—240 Vac				QOU20001‡		QOU30001‡	

* UL Listed as HACR type for use with heating, air conditioning and refrigeration equipment containing motor-group combinations and marked for use with HACR type circuit breakers.

† High-magnetic trip circuit breakers. Recommended for applications where high initial inrush current can occur and for individual dimmer applications.

‡ Available as Series 1 with forward box lugs only. (No optional terminations)

Tripping Mechanisms

A tripping mechanism is an assembly within the circuit breaker molded case that causes the circuit breaker to open automatically under sustained overload or short circuit conditions.

The tripping mechanisms in two- and three-pole circuit breakers operate such that an overcurrent on any pole of the circuit breaker will cause all poles of the circuit breaker to open simultaneously. Thermal and magnetic factory calibration (with current) is performed on each pole of every Square D circuit breaker.

These mechanisms operate to trip the circuit breaker:

- Thermal trip
- Magnetic trip
- Optional shunt trip accessory (see Accessories, page 12)

The sensing system is an integral part of a thermal-magnetic circuit breaker. The sensing system continually monitors current flowing through the circuit breaker. It detects abnormal current conditions and, depending on the magnitude of the current, initiates an inverse-time or an instantaneous tripping response. This action causes the tripping mechanism to open the circuit breaker contacts and interrupt current flow. The speed of the tripping process must be controllable and inversely matched to the severity of the overcurrent. QOU miniature circuit breakers have an over-center toggle mechanism for quick-make, quick-break action with positive handle indication. The handle assumes a position between ON (I) and OFF (O) when the circuit breaker has tripped.

© 2005 Schneider Electric All Rights Reserved

UPS

www.apc.com

Back-UPS® ES 650
User's Guide

1 Connect Battery

For safety, the Back-UPS ES is shipped with one battery wire disconnected. The UPS will not operate until the wire is connected to the touch-safe battery terminal. NOTE: Small sparks may occur during battery connection. This is normal.

1. Turn the Back-UPS ES over and press in the release tab. Slide the plastic battery cover off of the Back-UPS.
2. Connect the black battery wire firmly to the negative (-) battery terminal.
3. Insert the battery back into the compartment. Slide the plastic battery cover until the release tab locks into place.

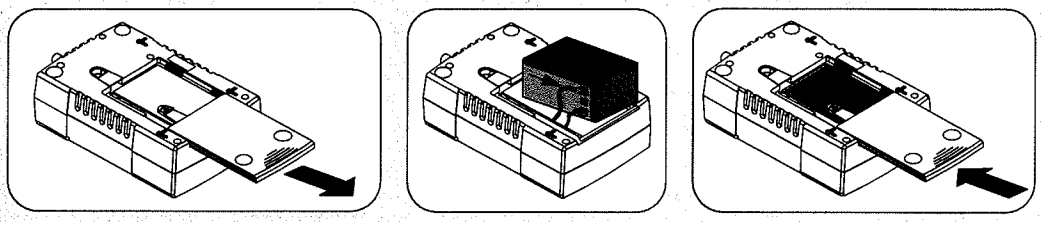

2 Connect Equipment

Battery Backup / Surge Protection

These outlets are powered whenever the Back-UPS ES is switched ON. During a power outage or other utility problems (brownouts, over-voltages), these outlets will be powered for a limited time by the Back-UPS ES. Plug your computer, monitor, CD-ROM drive or other data-sensitive devices such as an external disk or tape drive, or Home Phoneline Networking Association (HPNA) device into these outlets.

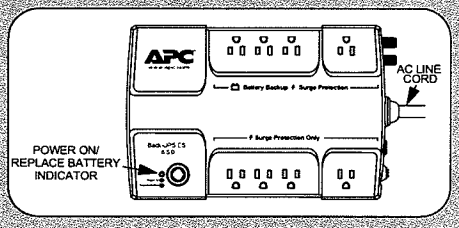

Surge Protection Only

These outlets provide full-time protection from surges even if the Back-UPS ES is switched OFF. Plug your printer, fax machine, scanner, or other peripherals that do not need battery power into these outlets.

Place the Back-UPS ES to avoid:
- Direct sunlight
- Excessive heat
- Excessive humidity or contact with fluids

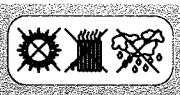

Plug the Back-UPS ES power cord directly into a wall outlet; not a surge protector or power strip.

Connect Computer Cable

The supplied cable and software provide automatic file saving and shutdown of the operating system in the case of a sustained power outage.

Connect the cable to the Data Port of the Back-UPS ES. Connect the other end of the cable to the USB port on your computer. The software will automatically find the USB Port of your computer.

Connect Modem / Phone / DSL / Fax / 10/100Base-T / HPNA / Cable Modem / CATV or DSS to Surge Protection

The Back-UPS protects a single line (2-wire) phone (including Digital Subscriber Line - DSL), Home Phoneline Networking Association (HPNA) type equipment, modem, 10/100 Base-T Ethernet, or fax machines from surges when connected through the UPS as shown in the drawing below.

The UPS also protects a cable modem, CATV converter, or DSS receiver from surges when it is connected through the UPS coaxial connectors as shown in the drawing below.

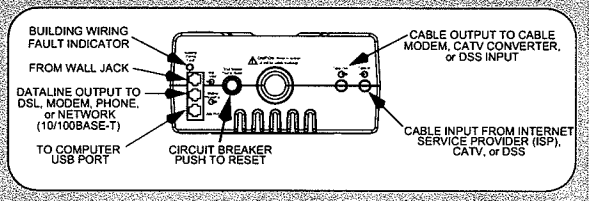

3 Power On and Install Software

Press the ON/OFF switch to power the unit ON.

A single short beep and the green "Power On" indicator confirms the Back-UPS ES is on and ready to provide protection.

The Back-UPS ES should charge for at least 16 hours to ensure sufficient runtime. The unit is being charged whenever it is connected to utility power, whether the unit is turned ON or OFF.

If the red Building Wiring Fault indicator (located on the end near the power cord) is lit, your building wiring presents a shock hazard that should be corrected by a qualified electrician.

Install the PowerChute® Personal Edition software

Place the PowerChute Personal Edition CD-ROM into your computer and follow the installation instructions on the screen.

Status Indicators

The Back-UPS ES indicates operating status using a combination of visual and audible indicators. Use the following table to identify the status of the Back-UPS ES.

Status	Visual Indications (Power On - Green) (Replace Battery - Red)	Audible Indication	Alarm Terminates When
Power On - UPS is supplying conditioned utility power to the load.	Power On LED - ON	None	Not applicable.
On Battery - UPS is supplying battery power to the load connected to the Battery outlets.	Power On LED - ON (off during beep)	Beeping 4 times every 30 seconds	UPS transfers back to Power On operation, or when UPS is turned off.
Low Battery Warning - UPS is supplying battery power to the load connected to the Battery outlets and the battery is near exhaustion.	Power On LED - flashing	Rapid beeping (every 1/2 second)	UPS transfers back to normal operation, or when UPS is turned off.
Replace Battery - The battery is disconnected.	Replace Battery LED - flashing	Constant tone	UPS turned off with the power switch.
The battery is in need of charging or is at the end of its usual life and must be replaced.	Power On and Replace Battery LEDs- Flashing (alternating)	Constant tone	
Overload Shutdown - During On Battery operation a battery power supplied outlet overload was detected.	None	Constant tone	UPS turned off with the power switch.
Sleep Mode - During On Battery operation the battery power has been completely exhausted and the UPS is waiting for utility power to return to normal.	None	Beeping once every 4 seconds	Utility power is restored, or if utility power is not restored within 32 seconds, or the UPS is turned off.
Building Wiring Fault - Your building wiring presents a shock hazard that should be corrected by a licensed electrician.	Building Wiring Fault LED (red) - ON	None	UPS is unplugged, or is plugged into a properly wired outlet.

See the Troubleshooting section for additional assistance.

990-1989 Copyright © 2005 American Power Conversion Corp.

APC, Back-UPS and PowerChute are registered trademarks of American Power Conversion Corp.
All other trademarks are property of their respective owners.

Troubleshooting

Use the table below to solve minor Back-UPS ES installation or operation problems. Consult APC Online Technical Support or call APC Technical Support for assistance with problems that cannot be resolved using the table below:

Problem	Probable Cause	Solution
Back-UPS ES will not turn on.	Battery is disconnected or utility power is not available at the wall outlet.	Connect the battery (see *Connect Battery*) and ensure power is available at the wall outlet.
No power available at the Surge Protection Only outlets.	Surge Protection Only outlets have been overloaded.	Reduce the amount of equipment plugged into Surge Protection Only outlets.
	Utility power not available at the wall outlet.	Ensure the fuse or circuit breaker for the outlet is not tripped, and that the wall switch controlling the outlet (if any) is in the ON position.
Connected equipment loses power.	Equipment is connected to the Surge Protection Only outlets.	Ensure the equipment you want to stay powered during a power failure is plugged into the "Battery Backup/Surge Protection" outlets and NOT the Surge Protection Only outlets.
	The Back-UPS ES is overloaded.	Make sure the equipment plugged into the outlets of the unit are not overloading its capacity. Try removing some of the equipment and see if the problem continues.
	PowerChute Personal Edition software has performed a shutdown due to a power failure.	The Back-UPS ES is operating normally.
	The Back-UPS ES has exhausted its available battery power.	The Back-UPS ES can only operate on battery power for a limited amount of time. The unit will eventually turn off when the available battery power has been used. Allow the unit to recharge for 16 hours before expecting maximum runtime.
	Connected equipment does not accept the step-approximated sine waveform the Back-UPS ES.	The output waveform is designed for computers and computer-related equipment. It is not designed for use with motor-type equipment.
	The Back-UPS ES may require service.	Contact APC Technical Support for further troubleshooting.
The Power On indicator is lit and the Back-UPS ES is beeping four times every 30 seconds.	The Back-UPS ES is using battery.	The Back-UPS ES is operating normally and using battery power. Once On Battery, you should save your current work, power down your equipment, and turn the unit OFF. Once normal power is restored, you may turn the unit back ON and power your equipment.
The Power On indicator flashes and the Back-UPS beeps twice per second at the same time.	Battery capacity is low (about 2 minutes of use remaining).	The Back-UPS ES is about to shut off due to a low battery charge condition! When the unit beeps twice every second, the battery has about 2 minutes of power remaining. Immediately power down your computer and turn the unit OFF. When normal power returns, the unit will recharge the battery.
Building Wiring Fault indicator is lit.	Your building wiring presents a shock hazard. Using the Back-UPS with this condition will void the warranty.	Call a qualified electrician for service.
Inadequate runtime.	The battery is not fully charged.	Allow the unit to charge by leaving it plugged into the wall at least 16 hours.
	Battery is near the end of useful life.	As a battery ages, the amount of runtime available will decrease. You can replace the battery by ordering one at www.apc.com. Batteries also age prematurely if the Back-UPS ES is placed near excessive heat.
No phone/fax/DSL/cable or network signal from the Back-UPS.	Data line from the ISP or wall outlet is connected to the wrong jack on the Back-UPS.	Make sure the data line from the wall outlet is connected to the jack labeled "Wall Outlet (Phone/Fax/DSL), or "Cable In" (Cable/DSS/CATV).
Internet connection is lost during power outage.	Modem has lost AC Power.	Plug the AC power cord of the modem into one of the four "Battery Backup/Surge Protection" outlets.

Specifications

Item	Specification	Model: BE650R
Input	Voltage	120 Vrms Nominal
	Frequency	50 - 60 Hz (auto-sensing)
	Brownout Transfer	88 Vrms, typical
	Over-voltage Transfer	139 Vrms, typical
Output	UPS Capacity (4 outlets)	650 VA / 390 W
	Total Amperage (8 outlets)	12 Amps (including UPS output)
	Voltage On Battery	115 Vrms ± 8% (step-approximated sine wave)
	Frequency - On Battery	50-60 Hz ± 1 Hz
	Transfer Time	6 ms typical, 10 ms maximum
Protection and Filter	AC Surge Protection	Full time, 375 joules
	Phone/fax/DSL Surge Protection	Single line (2-wire)
	Cable/CATV/DSS Surge Protection	One Coax Input/Output
	Network Surge Protection	10/100Base-T Ethernet
	EMI/RFI Filter	Full time
	AC Input	Resettable circuit breaker
Battery	Type	Sealed, maintenance-free lead acid
	Average Life	3 - 5 years depending on the number of discharge cycles and environmental temperature
Physical	Net Weight	16 lbs. (7 kg.)
	Dimensions (H x W x D)	3.8" x 10.9" x 7.1" (9.6 x 27.7 x 18.0 cm)
	Operating Temperature	+32°F to 104°F (0°C to 40°C)
	Storage Temperature	+5°F to 113°F (-15°C to 45°C)
	Operating Relative Humidity	0 to 95% non-condensing
	Operating Elevation	0 to 10,000 ft (0 to 3,000m)
Safety and Regulatory	Safety Approvals	UL 1778 listed, cUL certified per CSA standard C22.2 No. 107.1, NOM-001
	EMC Compliance	Notice: This device complies with part 68 and part 15 of the FCC rules. Operation is subject to the following two conditions: (1) This device may not cause harmful interference, and (2) This device must accept any interference received, including interference that may cause undesired operation. On the bottom of this equipment is a label that contains, among other information, the FCC registration number and ringer equivalence number (REN) for this equipment. If requested, this information must be provided to the telephone company.

Order Replacement Battery

Replace with an APC qualified battery. Replacement batteries can be ordered from www.apc.com (valid credit card required). The replacement battery part number for this Back-UPS is: **RBC17**.

Warranty

The standard warranty is 3 years from the date of purchase. APC's standard procedure is to replace the original unit with a factory reconditioned unit. Customers who must have the original unit back due to assigned asset tags and set depreciation schedules must declare such a need at first contact with APC Technical Support. APC will ship the replacement unit once the defective unit is received by the repair department or cross-ship upon the provision of a valid credit card number. The customer pays for shipping to APC, and APC pays ground freight transportation costs back to the customer.

Service

Please DO NOT RETURN Back-UPS ES to the place of purchase under any circumstances.

1. Consult the Troubleshooting section to eliminate common problems.

2. Verify the battery is connected (see *Connect Battery*) and that the Circuit Breaker is not tripped (see *Troubleshooting* section).

If you still have problems or questions, please contact APC via the internet or at one of the phone numbers listed below.

3. Before contacting APC, please be sure to record the date purchased, UPS model, and serial number (on bottom of unit).

4. Be prepared to troubleshoot the problem over the telephone with a Technical Support Representative. If this is not successful, the representative will issue a Return Material Authorization Number (RMA#) and a shipping address.

5. Pack the unit in its original packaging. If the original packaging is not available, ask APC Technical Support about obtaining a new set. Pack the unit properly to avoid damage in transit. Never use foam beads for packaging. Damage sustained in transit is not covered under warranty (insuring the package for full value is recommended).

6. Write the RMA# on the outside of the package.

7. Return the unit by insured carrier to the address given to you by APC Technical Support.

APC Contact Information

Online Technical Support:	http://support.apc.com http://www.apc.com/support esupport@apcc.com
Web Site:	www.apc.com
USA/Canada:	1.800.800.4272
Mexico:	+52.292.0253 / 52.292.0255
Brazil:	+0800.12.72.1
Worldwide:	+1.401.789.5735

SPP-1200 Series

120 VAC Wire In Surge Suppressor

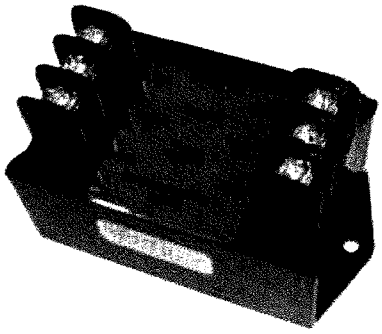

Features:

- Exceeds recommendations for IEEE/ANSI C62.41.2-2002 Categories A3 & B3 and UL1449 Second Edition.
- Powerful "no wear out" design.
- Meets severity level 4 of IEC/EN 61000-4-4 and 61000-4-5.
- "UL Recognized Component" to 1449 Second Edition for US and Canada.
- Unique long life design combined with EMI/ RFI filtering provide the most effective protection.
- Rugged epoxy molded case mounts easily inside equipment or on panel or wall.
- Both differential and common mode suppression and filtering.
- Can be hard wired into power distribution lines in the most severe industrial environments.
- Sub nanosecond response time stops failures due to lightning, spikes, and over voltage surges on main power entry panel servicing electronic equipment, while minimizing other electrical noise.
- Automatically resets after each transient. No maintenance is required.

Applications:

The SPP-1200 Series is normally installed inside measurement and control equipment, computers, terminals, motor controllers, instrumentation, telemetry equipment, etc. This Series is also frequently utilized by System Integrators.

Effective protection for air conditioning (HVAC), remote site controls and other industrial environments.

Other power and multiple phase models are available as well as DC versions.

Typical Installation:

Install the SPP-1200 Series after the AC power line switch and fuse, and as close to the electronic equipment it protects as possible. The ground terminal must be connected to a good earth ground (AWG #14 or larger). Dress output (clean) AC lines away from incoming power line. The suppressor contains no internal fuse and can fail short under direct lightning exposure; therefore proper fusing is essential. Heat sinking is not required.

SPP-1200 Series Operating Specifications:

Specifications	SPP-1201	SPP-1202	SPP-1203	SPP-1204	SPP-1205
Operating Line Voltage Rating 50/60 Hz	120 VAC	120 VAC	120 VAC	120 VAC	120 VAC
Maximum Operating Line Current	5 Amps	15 Amps	30 Amps	5 Amps	15 Amps
MCOV (Max. Continuous Operating Voltage) VAC	130	130	130	130	130
Suppressed Voltage Rating Vpk (UL 1449 2nd edition)	330 V (L-N,L-G,N-G)	330 V (L-N,L-G,N-G)	330V (L-N), 400V(L-G,N-G)	330 V (L-N,L-G,N-G)	330V (L-N,N-G), 400 (L-G))
Maximum Transient Voltage*	20 kV	20 kV	20 kV	20 kV	20 kV
Maximum Transient Current*	10 kA	10 kA	10 kA	10 kA	10 kA
Frequency Attenuation	100 kHz –25 dB, 10 MHz –55 dB				
Maximum Leakage Current	0.5 mA @ 120 VAC / 60 Hz				
Response Time	Less than 1 nanosecond				
Operating & Storage Temperature	-40 °C to +85°C				

* Consult the factory for other applications and operating conditions and specifications. All specifications at 25 degrees Celsius.
**Waveforms (1.2 x 50 µSec source voltage / 8 x 20 µSec source current).

Typical Installation / Outline Dimensions:

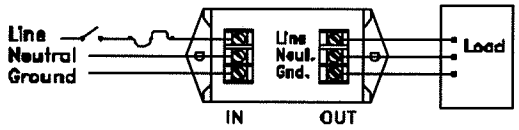

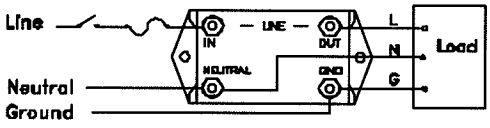

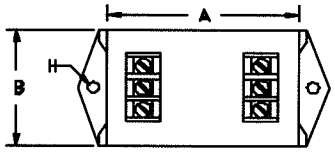

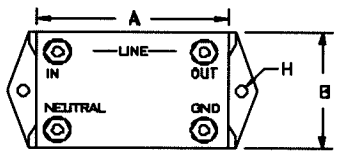

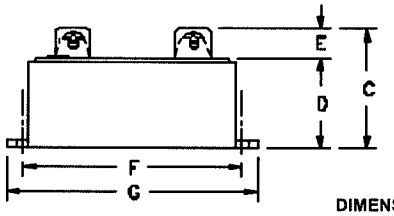

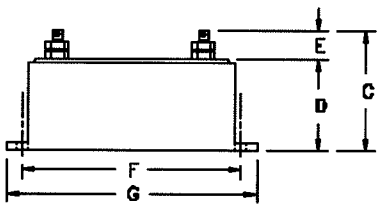

DIMENSIONS ARE IN INCHES

MODEL	A	B	C	D	E	F	G	H (Hole Size)	WIRE CONNECTION	
SPP-1201	2.00	2.00	2.32	1.50	0.82	2.50	3.00	0.1875	Barrier Strip #6	
SPP-1202	3.00	2.00	2.32	1.50	0.82	3.50	4.00	0.1875	Barrier Strip #6	
SPP-1203	3.00	3.00	2.05	1.50	0.60	3.50	4.00	0.1875	10-32	Screw Post
SPP-1204	2.00	2.00	2.05	1.50	0.60	2.50	3.00	0.1875	8-32	Screw Post
SPP-1205	3.00	2.00	2.05	1.50	0.60	3.50	4.00	0.1875	8-32	Screw Post

Circuit Components, Inc.
2400 S. Roosevelt Street Tempe, AZ • 85282
Tel: 480-967-0624 • Fax: 480-967-9385
Email: info@surgecontrol.com • Website: www.surgecontrol.com

SURGE CONTROL®
A PRODUCT OF *CCI*

This information is not intended to and does not create any warranties, expressed or implied, including any warranty of merchantability or fitness for a particular purpose. Circuit Components Inc. reserves the right to change specifications at any time without notice.

Surge Control® is a trademark of Circuit Components, Inc.. **Revised 0704** **© 2004 Circuit Components, Inc.. All rights reserved.**

MEAN WELL

25W Single Output Switching Power Supply S-25 series

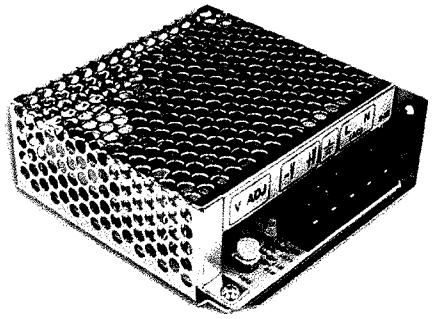

■ Features :

- Universal AC input / Full range
- Protections:Short circuit/Over load/Over voltage
- Cooling by free air convection
- 100% full load burn-in test
- Fixed switching frequency at 56KHz
- 2 years warranty

SPECIFICATION

MODEL		S-25-5	S-25-12	S-25-15	S-25-24
OUTPUT	DC VOLTAGE	5V	12V	15V	24V
	RATED CURRENT	5A	2.1A	1.7A	1.1A
	CURRENT RANGE	0 ~ 5A	0 ~ 2.1A	0 ~ 1.7A	0 ~ 1.1A
	RATED POWER	25W	25.2W	25.5W	26.4W
	RIPPLE & NOISE (max.) Note.2	50mVp-p	100mVp-p	100mVp-p	100mVp-p
	VOLTAGE ADJ. RANGE	4.75 ~ 5.5V	10.8 ~ 13.2V	13.5 ~ 16.5V	21.6 ~ 26.4V
	VOLTAGE TOLERANCE Note.3	±2.0%	±1.0%	±1.0%	±1.0%
	LINE REGULATION	±0.5%	±0.5%	±0.5%	±0.5%
	LOAD REGULATION	±1.0%	±0.5%	±0.5%	±0.5%
	SETUP, RISE TIME	300ms, 50ms/230VAC 800ms, 50ms/115VAC at full load			
	HOLD TIME (Typ.)	90ms/230VAC 12ms/115VAC at full load			
INPUT	VOLTAGE RANGE	85 ~ 264VAC 120 ~ 370VDC			
	FREQUENCY RANGE	47 ~ 63Hz			
	EFFICIENCY(Typ.)	72%/115VAC	76%/115VAC	77%/115VAC	80%115VAC
	AC CURRENT (Typ.)	0.6A/115VAC 0.35A/230VAC			
	INRUSH CURRENT (Typ.)	COLD START 13A/115VAC 25A/230VAC			
	LEAKAGE CURRENT	<0.75mA / 240VAC			
PROTECTION	OVER LOAD	105 ~ 150% rated output power			
		Protection type : Hiccup mode, recovers automatically after fault condition is removed.			
	OVER VOLTAGE	5.75V ~ 6.75V	13.8V ~ 16.2V	17.25V ~ 20.25V	27.6V ~ 32.4V
		Protection type : Hiccup mode, recovers automatically after fault condition is removed.			
ENVIRONMENT	WORKING TEMP.	-10 ~ +60℃ (Refer to output load derating curve)			
	WORKING HUMIDITY	20 ~ 90% RH non-condensing			
	STORAGE TEMP., HUMIDITY	-20 ~ +85℃, 10 ~ 95% RH			
	TEMP. COEFFICIENT	±0.03%/℃ (0 ~ 50℃)			
	VIBRATION	10 ~ 500Hz, 2G 10min./1cycle, period for 60min. each along X, Y, Z axes			
SAFETY & EMC (Note 4)	SAFETY STANDARDS	UL1012, TUV EN60950-1 Approved			
	WITHSTAND VOLTAGE	I/P-O/P:3KVAC I/P-FG:1.5KVAC O/P-FG:0.5KVAC			
	ISOLATION RESISTANCE	I/P-O/P, I/P-FG, O/P-FG:100M Ohms/500VDC			
	EMI CONDUCTION & RADIATION	Compliance to EN55022 (CISPR22) Class B			
	HARMONIC CURRENT	Compliance to EN61000-3-2,-3			
	EMS IMMUNITY	Compliance to EN61000-4-2,3,4,5; ENV50204, EN55024, Light industry level, criteria A			
OTHERS	MTBF	330.8K hrs min. MIL-HDBK-217F (25℃)			
	DIMENSION	99*97*36mm (L*W*H)			
	PACKING	0.39Kg; 45pcs/18Kg/0.9CUFT			
NOTE	1. All parameters NOT specially mentioned are measured at 230VAC input, rated load and 25℃ of ambient temperature. 2. Ripple & noise are measured at 20MHz of bandwidth by using a 12" twisted pair-wire terminated with a 0.1uf & 47uf parallel capacitor. 3. Tolerance : includes set up tolerance, line regulation and load regulation. 4. The power supply is considered a component which will be installed into a final equipment. The final equipment must be re-confirmed that it still meets EMC directives.				

60W Single Output Switching Power Supply — S-60 series

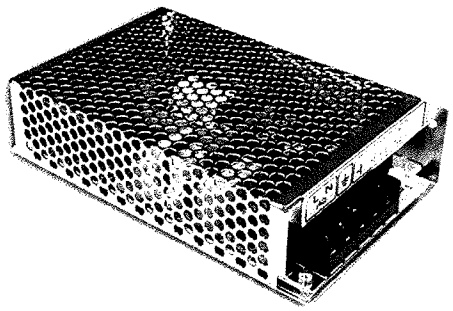

■ Features :

- Universal AC input/Full range
- Protections:Short circuit/Over load/Over voltage
- Cooling by free air convection
- 100% full load burn-in test
- Fixed switching frequency at 50KHz
- 2 years warranty

SPECIFICATION

MODEL		S-60-5	S-60-12	S-60-15	S-60-24
OUTPUT	DC VOLTAGE	5V	12V	15V	24V
	RATED CURRENT	12A	5A	4A	2.5A
	CURRENT RANGE	0 ~ 12A	0 ~ 5A	0 ~ 4A	0 ~ 2.5A
	RATED POWER	60W	60W	60W	60W
	RIPPLE & NOISE (max.) Note.2	120mVp-p	120mVp-p	150mVp-p	150mVp-p
	VOLTAGE ADJ. RANGE	4.75 ~ 5.5V	10.8 ~ 13.2V	13.5 ~ 16.5V	21.6 ~ 26.4V
	VOLTAGE TOLERANCE Note.3	±2.0%	±1.0%	±1.0%	±1.0%
	LINE REGULATION	±0.5%	±0.5%	±0.5%	±0.5%
	LOAD REGULATION	±1.0%	±0.5%	±0.5%	±0.5%
	SETUP, RISE, HOLD TIME	300ms, 50ms, 80ms / 230VAC 800ms, 50ms, 10ms / 115VAC at full load			
INPUT	VOLTAGE RANGE	85 ~ 264VAC 120 ~ 370VDC			
	FREQUENCY RANGE	47 ~ 63Hz			
	EFFICIENCY(Typ.)	73%	76%	77%	79%
	AC CURRENT	2A/115VAC 1A/230VAC			
	INRUSH CURRENT(max.)	COLD START 30A/115VAC 60A/230VAC			
	LEAKAGE CURRENT	<3.5mA / 240VAC			
PROTECTION	OVER LOAD	105 ~ 150% rated output power			
		Protection type : Hiccup mode, recovers automatically after fault condition is removed.			
	OVER VOLTAGE	5.75 ~ 6.75V	13.8 ~ 16.2V	17.25 ~ 20.25	27.6 ~ 32.4V
		Protection type : Hiccup mode, recovers automatically after fault condition is removed.			
ENVIRONMENT	WORKING TEMP.	-10 ~ +60℃ (Refer to output load derating curve)			
	WORKING HUMIDITY	20 ~ 90% RH non-condensing			
	STORAGE TEMP., HUMIDITY	-20 ~ +85℃, 10 ~ 95% RH			
	TEMP. COEFFICIENT	±0.03%/℃ (0 ~ 50℃)			
	VIBRATION	10 ~ 500Hz, 2G 10min./1cycle, period for 60min. each along X, Y, Z axes			
SAFETY & EMC (Note 4)	SAFETY STANDARDS	UL1012, UL1950, TUV EN60950 Approved			
	WITHSTAND VOLTAGE	I/P-O/P:3KVAC I/P-FG:1.5KVAC O/P-FG:0.5KVAC			
	ISOLATION RESISTANCE	I/P-O/P, I/P-FG, O/P-FG:100M Ohms/500VDC			
	EMI CONDUCTION & RADIATION	Compliance to EN55022 (CISPR22) Class B			
	HARMONIC CURRENT	Compliance to EN61000-3-2,-3			
	EMS IMMUNITY	Compliance to EN61000-4-2,3,4,5,6,8,11; ENV50204, EN55024, Light industry level, criteria A			
OTHERS	MTBF	316.2K hrs min. MIL-HDBK-217F (25℃)			
	DIMENSION	159*97*38mm (L*W*H)			
	PACKING	0.55Kg; 24pcs/13.2Kg/0.75CUFT			
NOTE	1. All parameters NOT specially mentioned are measured at 230VAC input, rated load and 25℃ of ambient temperature. 2. Ripple & noise are measured at 20MHz of bandwidth by using a 12" twisted pair-wire terminated with a 0.1uf & 47uf parallel capacitor. 3. Tolerance : includes set up tolerance, line regulation and load regulation. 4. The power supply is considered a component which will be installed into a final equipment. The final equipment must be re-confirmed that it still meets EMC directives.				

ANTENNA, RADIO AND MODEM

BLUEWAVE™
Antenna Systems Ltd.

MARATHON™

BMY890G

890-960 MHz

ANTENNA SPECIFICATIONS

Bottom Operating Frequency (MHz VSWR ≤ 1.5)	890
Top Operating Frequency (MHz VSWR ≤ 1.5)	960
Nominal Gain (dBd, dBi > 1GHz)	6.5
Horizontal Beamwidth (Deg-3dB)	100
Vertical Beamwidth (Deg-3dB)	62
Front to Back Ratio (dB)	15
Power Rating (W)	200
Length (inches)	13
Width (inches)	6.8
Antenna Weight (lbs.)	2
Cross Sectional Area (Max. ft^2)	0.12
Lateral Thrust at 100mph (lbs.)	3
Rated Wind Velocity (mph)	125
Rated Wind Velocity with 1/2" Radial Ice (mph)	120

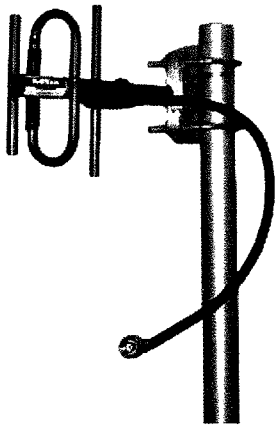

Includes mounting hardware
BWC1001

BMY890G5502N1 contains 2' of RG213/U and N-Male crimp connector.

Other options available.
Cable Type: Your choice of RG213U or BW400.
Cable Length: Up to 50'.
Connector: N, BNC, TNC and more.

The BMY890G has been engineered to meet the requirements of a high gain, broadband, premium quality antenna. This antenna provides 6.5 dBd gain and operates in the 890-960 MHz range. The BMY890G is manufactured using high strength 6061-T6 Aluminum to withstand heavy ice, high wind and other harsh conditions. Our patented dipole design has an integral feed line and is welded to the boom for extra strength and electrical conductivity. This also eliminates misalignment or fastener problems. The entire antenna is anodized for appearance and corrosion resistance. A heavy duty clamp is supplied which easily permits horizontal or vertical polarization. The BMY890G is available with RG213U and N-Male Crimp connector. Other options available by special order.

7015 8 Street NE Calgary, AB Canada T2E 8A2
T: 403.291.4422 F: 403.219.3644
TF: 1.888.334.9244
E: sales@bluewaveantenna.com

www.bluewaveantenna.com

© Bluewave Antenna Systems Ltd

SCH-1000

The SCADA Company
P.O. Box 535129
Grand Prairie, TX 75053
(P) 972-647-8484 ~ (F) 972-602-2239
www.scadacompany.com

900 MHz Frequency Hopping Spread Spectrum Transceiver

The SCADA Company

Overview

The SCH-1000 is a frequency-hopping spread spectrum digital transceiver operating in the 902-928 MHZ license-free band. It is designed for use with: SCADA, Telemetry, Vehicle Data/Tracking, Display Signs, Traffic Control, and many more automation applications. The SCH-1000's High Performance Radio Core ensures consistent distance and throughput performance even in close proximity to noisy paging and cellular towers.

The Latest in Coding Technology

The SCH-1000 uses the latest coding technology which improves security, throughput efficiency, and error detection. It dramatically reduces the overhead inherent in other coding methods and provides faster effective communications speeds at a much lower cost. The result is the most reliable and cost efficient radio available.

Performance

The SCH-1000 is a powerful 1 Watt transceiver that effectively communicates at distances up to 20 Miles line of sight, depending upon antenna selection and the environment. The Hopper transmits data at true 115Kbps and has a high tolerance to environmental conditions and interference. Combining high performance and with affordable price, the SCH-1000 enables the implementation of applications previously unable to benefit from wireless communications. This radio supports Point-to-Point, Point-to-Multipoint, Repeater (Store and Forward), TDMA, Multimaster, Modbus, and Remote Diagnostics modes. The SCH-1000 sets new standards for robust, reliable wireless communications at an affordable price.

Certifications

Spread spectrum technology allows use of the SCH-1000 without an FCC site license. The Hopper is certified for use as an unlicenced spread spectrum device in the United States and Canada.

Applications

The SCH-1000 was designed with the industrial market in mind. The radio can be powered by 24VDC and uses a standard Db9 connector. The Hopper works well with Modbus RTU which means higher throughput than Modbus ASCII. The SCH-1000 can be used for point to point applications as well as multi-drop applications. The standard built-in repeater further enhances the SCH-1000's capabilities and flexibility.

The SCADA Company

Specification

SCH-1000

General

Radio Frequency	902-928 MHZ
Type	Frequency Hopping Spread Spectrum Digital Transceiver
Frequency Control	Frequency Hopping
Interface	Asynchronous Serial - 5V TTL RS-232C
Hopping Patterns	64 user selectable
Diagnostics	Remote control, remote statistics, remote diagnostics
Operating Modes	Point-to-Point, Point-to-Multipoint, Store and Forward (Repeater), TDMA, Multimaster
Status Signals	RX/Sync, TXMode, RSSI 1,2,3
Error Detection	16bit CRC with optional FEC
RS-232 Signals	Gnd, TxD, RxD, CTS, RTS, DTR, DSR, DCD
User Interface	SCH-1000 Software

Performance

RF Data Rate	115.2 Kbps, maximum
Interface Data Rate	2400 bps minimum, 115.2 Kbps maximum (uncompressed)
Range**	20 Miles, line of sight
Sensitivity	-108 dBm
Duty Cycle	100%
Rejction	70dB out of band; 60dB in band; 50dB adjacent channel

**Range calculations are line-of-sight. Actual range will vary based upon specific board integration, antenna selection, environment, and the OEM's device.

Power Requirements

Input Voltage	9-32 VDC
Current Consumption	550mA max at 1W Tx Power; 210mA typical In Rx Mode
Output Power	1 Watt (User Configurable)

Physical Properties

Temperature Range	-40°C to 70°C
Width	4.5 inches (11.5 cm)
Height	4.0 inches (10.2 cm)
Depth	1.5 inches (3.8 cm)
Mounting	Horizontal Center-to-Center: 2.1875 inches (5.5 cm) Vertical Center-to-Center: 4.75 inches (12.3 cm)

Antenna

Antenna Connector	SMA Female

Certifications

United States	FCC Part 15.247
Canada	IC RSS210

P.O. Box 535129 Grand Prairie, TX 75053-5129 voice: 972-647-8484 fax: 972-602-2239

Zoom/FaxModem 56Kx Dualmode

56K Faxmodem for computers with a serial port

Advanced Power Handling
Protects against brown-outs and power glitches

On-board DSP and controller

ZoomGuard Lightning Protection

High-quality Speaker

Extended Status Reporting

Compatible with V.32bis and slower modems

Seven Year Warranty

Model 2949C

The Zoom/FaxModem 56Kx Dualmode now features a stylish new case and great new features.

The modem plugs into the serial port of any computer, including computers running Windows, Macintosh OS, Linux and Unix. The Model 3049 is fully compatible with all features of the V.90 international standards and will also communicate at V.34 bis and slower speeds.

The new Model 2949 includes hardware features which make it superior to the competition, including:

ZoomGuard Lightning Protection: provides the best protection in the industry against the leading cause of modem failure.

Advanced Power Handling: protects against brownouts and power glitches which can freeze other modems - a "must-have" for unattended modem applications.

High-quality monitor speaker to clearly monitor the status of the call's progress: dialtone, busy, ring, voice answer, or any other audible output from the phone line.

On-board digital signal processor and controller for the highest level of system stability and compatibility with virtually any operating system that supports a serial communications port.

Extended status reporting of the modem's performance with nine indicator lights.

Voice mail support when used with a soundcard.

Seven year warranty

Model 2949C

Zoom/FaxModem 56Kx Dualmode

External for Windows, Macintosh, Linux and other computers with a serial port

System Requirements

- Available serial port (also called RS-232 port, modem port, or COM port)
- Voice Mail requires a soundcard for message playback (microphone required to record a personalized greeting message)
- NOTE: This modem's hardware works with computers running Macintosh, Unix and other operating systems which typically include software for Internet access. To assure support for other modem features, such as fax, this modem is bundled with software on a CD-ROM that requires a Windows operating system and a hard drive.

Specifications

Data Speeds	- 56,000 bps receive/33,600 bps send with V.90 - 300 to 33,600 bps full-duplex supporting all international and Bell standards.
Fax Speeds	- 300 to 14,400 bps, Group 3, Class 1
Standards Supported	- Data: V.90, V.34, V.32bis, V.32, V.22bis, V.22A/B, V.22, V.23, V.21, Bell 103/212A - Compression: V.42bis, MNP5 - Error Control: V.42, MNP2-4 - Hayes™ AT and extended AT command set compatible - V.80 for H.324 (videophone) compatibility
Dialing	- Supports programmable duration DTMF (touchtone) - Call progress tone detection (dialtones, busy, ring, etc.)
Video Support	- V.80 (required for point-to-point H.324 video over standard phone lines)
Additional Features	- On-board Controller and DSP - Downloadable firmware for easy upgrades - Voicemail with multiple private mailboxes, password protection, remote retrieval and easy message review (requires soundcard) - Plug and Play for automatic configuration with Windows 95,98, Me, 2000, XP and NT4.0 - 9 LED status lights: Power, Transmit Data, Receive Data, Off Hook, Carrier Detect, Terminal Ready, Auto Answer, 56K Operation, V34 operation
Regulatory Approvals	- FCC Parts 15B and 68 - UL C-UL - Industry Canada - CE Approved
Physical Specifications	- 5.77" x 4.42" x 1.12" (14.6cm x 11.2cm x 2.8cm)
Warranty	- Seven years

International Headquarters
Zoom Telephonics, Inc.
207 South Street
Boston, MA 02111
USA
Tel: 617 423-1072
Fax: 617 423-3923
email: sales@zoom.com
www.zoom.com
Nasdaq: ZOOM

European Sales/Support
Zoom/Hayes
430 Frimley Business Park
Frimley, Camberley
Surrey, GU16 5SG UK
Tel: +44 (0) 1276 704400
Fax +44 (0) 1276 704500

©2002 Zoom Telephonics, Inc., 207 South Street, Boston, MA 02111
Zoom is a registered trademark of Zoom Telephonics, Inc. Windows 98, Windows Me, Windows 2000, Windows NT4.0 and Windows XP are registered trademarks of Microsoft Corporation.
All other registered trademarks and trademarks used herein are the property of their respective holders.

Package contents:

- Zoom V.90 EXT modem
- RJ-11 phone card
- User guide
- Software on CD ROM
- AC power adapter

34522949

DRAWINGS

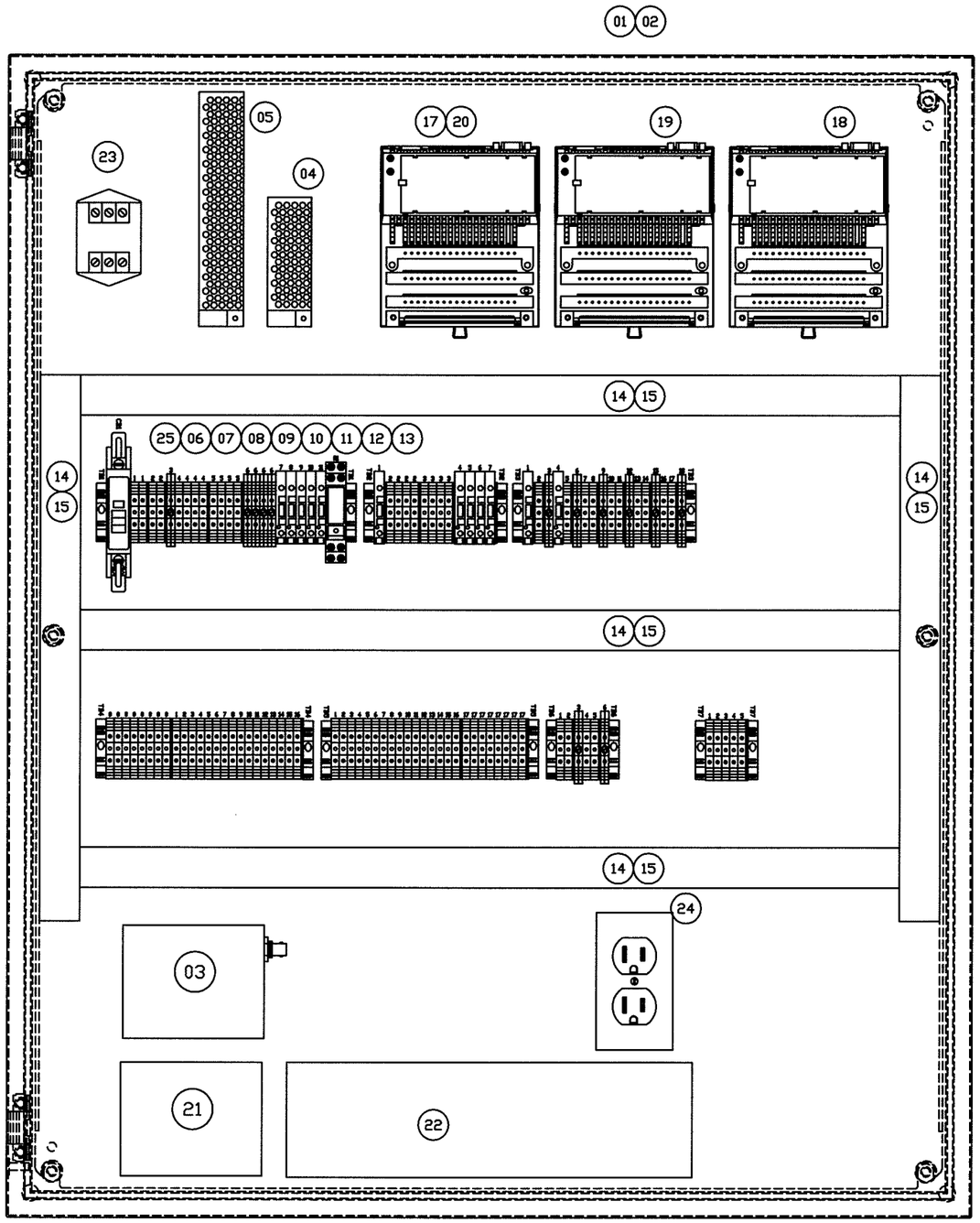

BILL OF MATERIAL

ITEM	QTY	DESCRIPTION	PART NO.	MANUFACTURER
01	1	ENCLOSURE, CONCEPT, 36X30X8, NEMA 4X, STAINLESS STEEL	CSD363008SS6	HOFFMAN
02	1	ENCLOSURE BACKPLATE	CP3630	HOFFMAN
03	1	FREQUENCY HOPPING DATA RADIO	SCH1000	KIMARK
04	1	POWER SUPPLY, 120VAC-24VDC, 2.5 AMP	S-60-24	MEANWELL
05	1	POWER SUPPLY, 120VAC-12VDC, 2 AMP	S-25-12	MEANWELL
06	1	RELAY, MINIATURE PCB, DPDT 8A, 24 VDC	40.52.024	FINDER
07	1	RELAY SOCKET, 95 SERIES	95.85.3XSA	FINDER
08	1	RELAY SOCKET LED, 24 VDC	99.80.00.24.59	FINDER
09	AR	FUSED TERMINAL, 5X20 MM, 6.3A	2190.2	CONTA-CLIP
10	AR	TERMINAL, 2-CONDUCTOR, #22-#10	1001.2	CONTA-CLIP
11	AR	GROUND TERMINAL, 2-CONDUCTOR, #22-#10	1001.2	CONTA-CLIP
12	AR	FUSE, 250V, 5MM X 20MM	-	BUSSMAN
13	AR	CARRIER RAIL, 35 X 7.5MM	210-112	WAGO
14	AR	WIRE DUCT, 1X1 LT GRAY	G1X1LG6	PANDUIT
15	AR	WIRE DUCT COVER, 1 IN., LT GRAY	C1LG6	PANDUIT
16	-	-	-	-
17	1	MOMENTUM PLC	171CCC76010	MODICON
18	1	MOMENTUM I/O BASE, 8 AI, 4-20mA	170AAI03000	MODICON
19	1	MOMENTUM I/O BASE 24VDC 16 DI & DO	170ADM35010	MODICON
20	1	MOMENTUM I/O BASE, 4 AO, 4-20mA	170AAO92100	MODICON
21	1	DATA FAX MODEM	2949	ZOOM
-	-			
22	1	UPS, 650 VA	BE650R	APC
23	1	SURGE SUPRESSOR, 15 AMP	SPP-1201	SURGE CONTROL
24	1	RECEPTACLE, DUPLEX, 120 VAC	-	-
25	1	CIRCUIT BREAKER, 10 AMP, SINGLE POLE	QOU110	SQUARE-D

REVISIONS				
REV	DESCRIPTION	DATE	BY	APPROVED

APPROVALS		DATE
DRAWN	R. WETSEL	12/17/07
CHECKED		
ENGINEER	R. WETSEL	
PRODUCT:		

KIMARK SYSTEMS INC.
GRAND PRAIRIE, TEXAS

CITY OF ROCKWALL
COUNTRY LANE ELEVATED TANK
SCADA PANEL LAYOUT & BOM

SIZE D | DWG NO. E001 | REV B

SCALE: DO NOT SCALE DRAWING | SHEET 1 OF 7

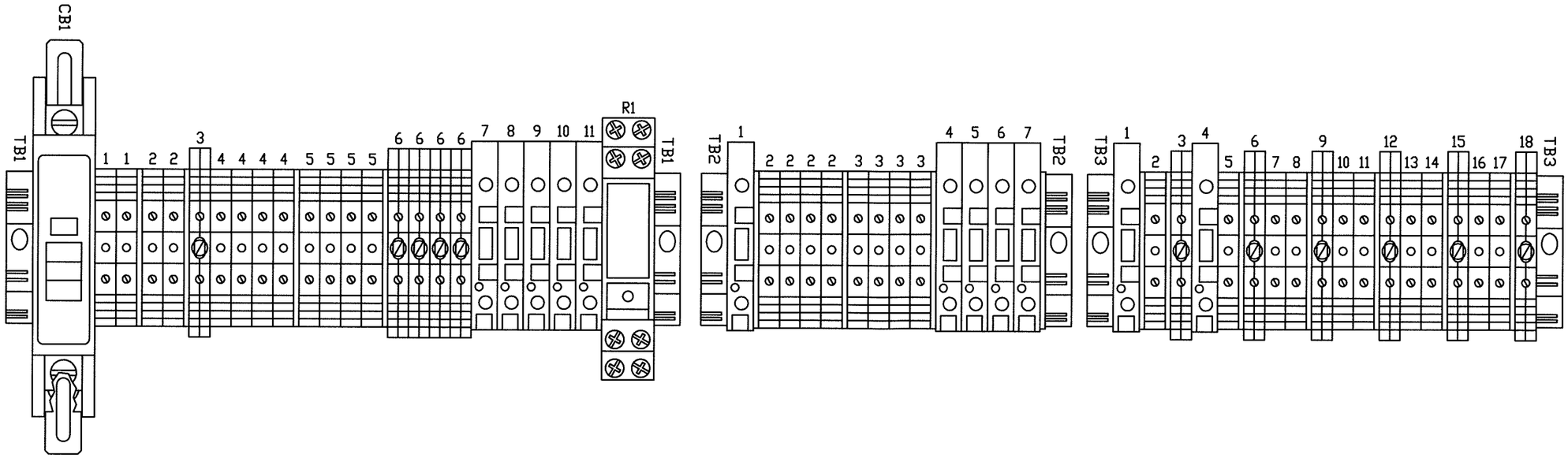

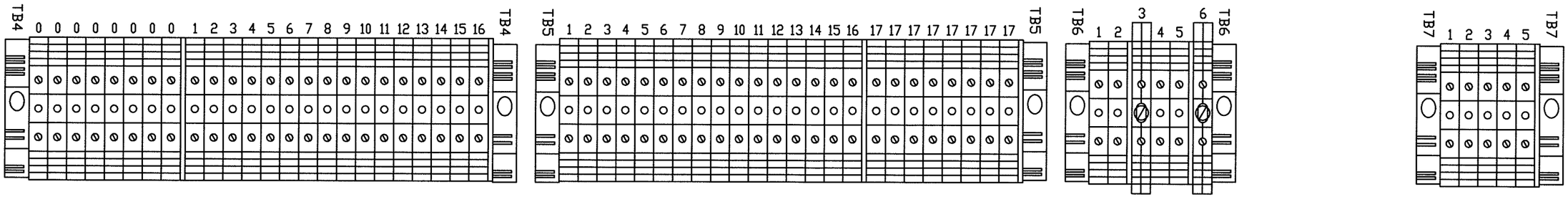

REVISIONS				
REV	DESCRIPTION	DATE	BY	APPROVED

APPROVALS		DATE
DRAWN	R. WETSEL	12/17/07
CHECKED		
ENGINEER	R. WETSEL	
PRODUCT:		

KIMARK SYSTEMS INC.
GRAND PRAIRIE, TEXAS

CITY OF ROCKWALL
COUNTRY LANE ELEVATED TANK
SCADA PANEL TERMINAL BLOCK DETAIL

SIZE D | DWG NO. E002 | REV B

SCALE: DO NOT SCALE DRAWING SHEET 2 OF 7

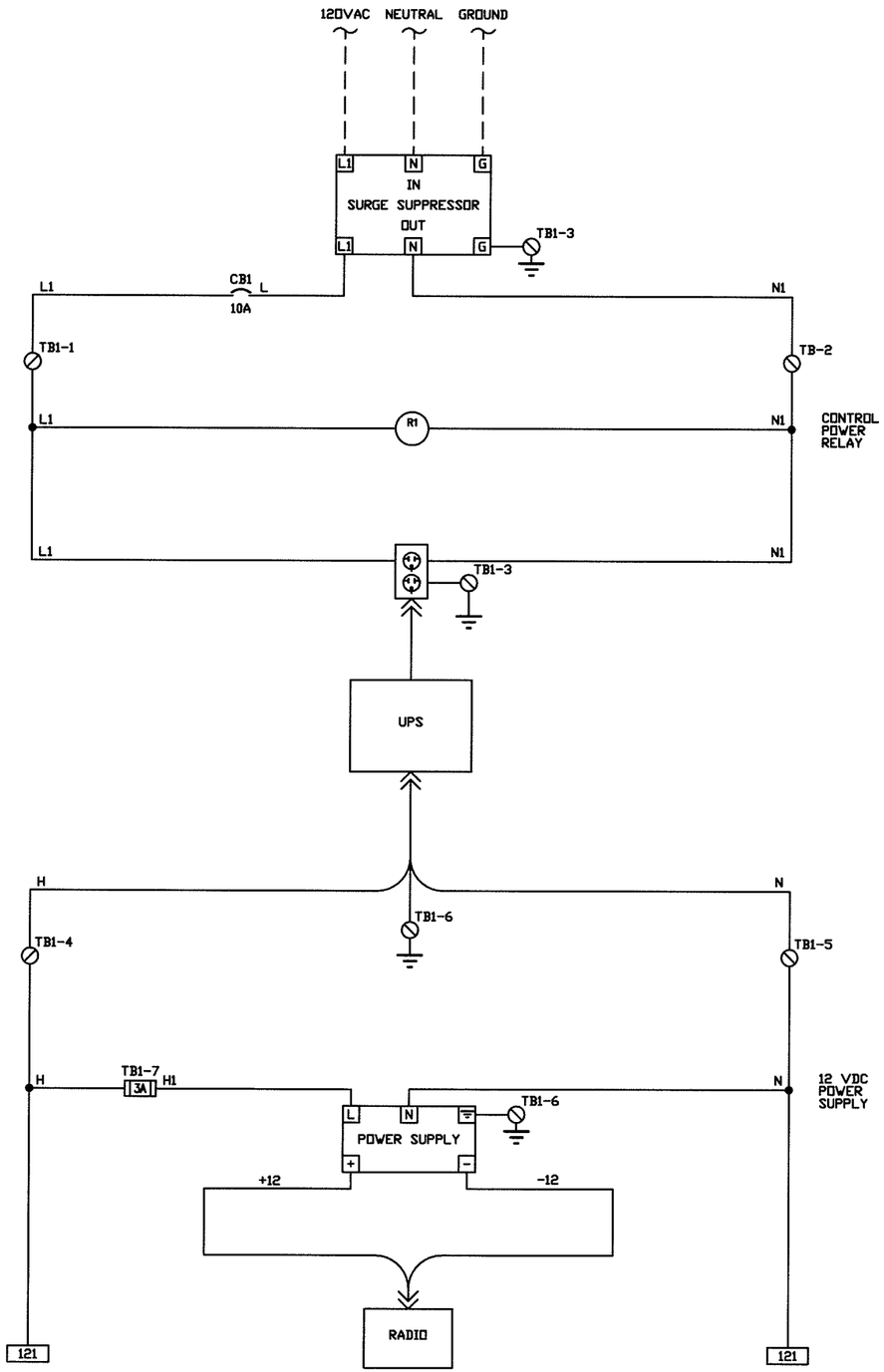

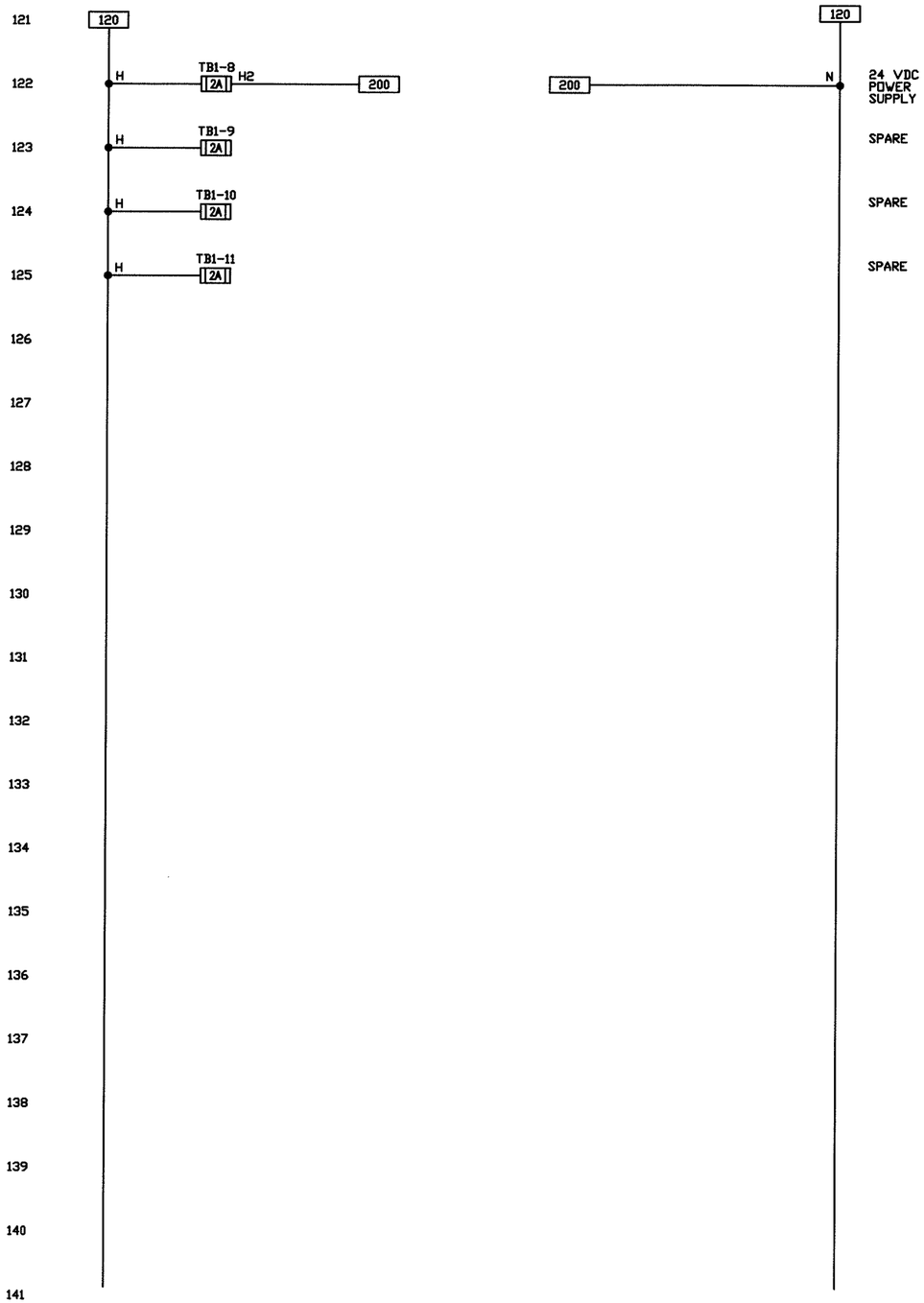

LEGEND

FIELD WIRING – — — — –

PANEL WIRING ————

REVISIONS				
REV	DESCRIPTION	DATE	BY	APPROVED

APPROVALS		DATE
DRAWN	R. WETSEL	12/17/07
CHECKED		
ENGINEER	R. WETSEL	
PRODUCT:		

KIMARK SYSTEMS INC.
GRAND PRAIRIE, TEXAS

CITY OF ROCKWALL
COUNTRY LANE ELEVATED TANK
SCADA PANEL 120 VAC POWER DISTRIBUTION

SIZE D | DWG NO. E101 | REV B

SCALE: DO NOT SCALE DRAWING SHEET 3 OF 7

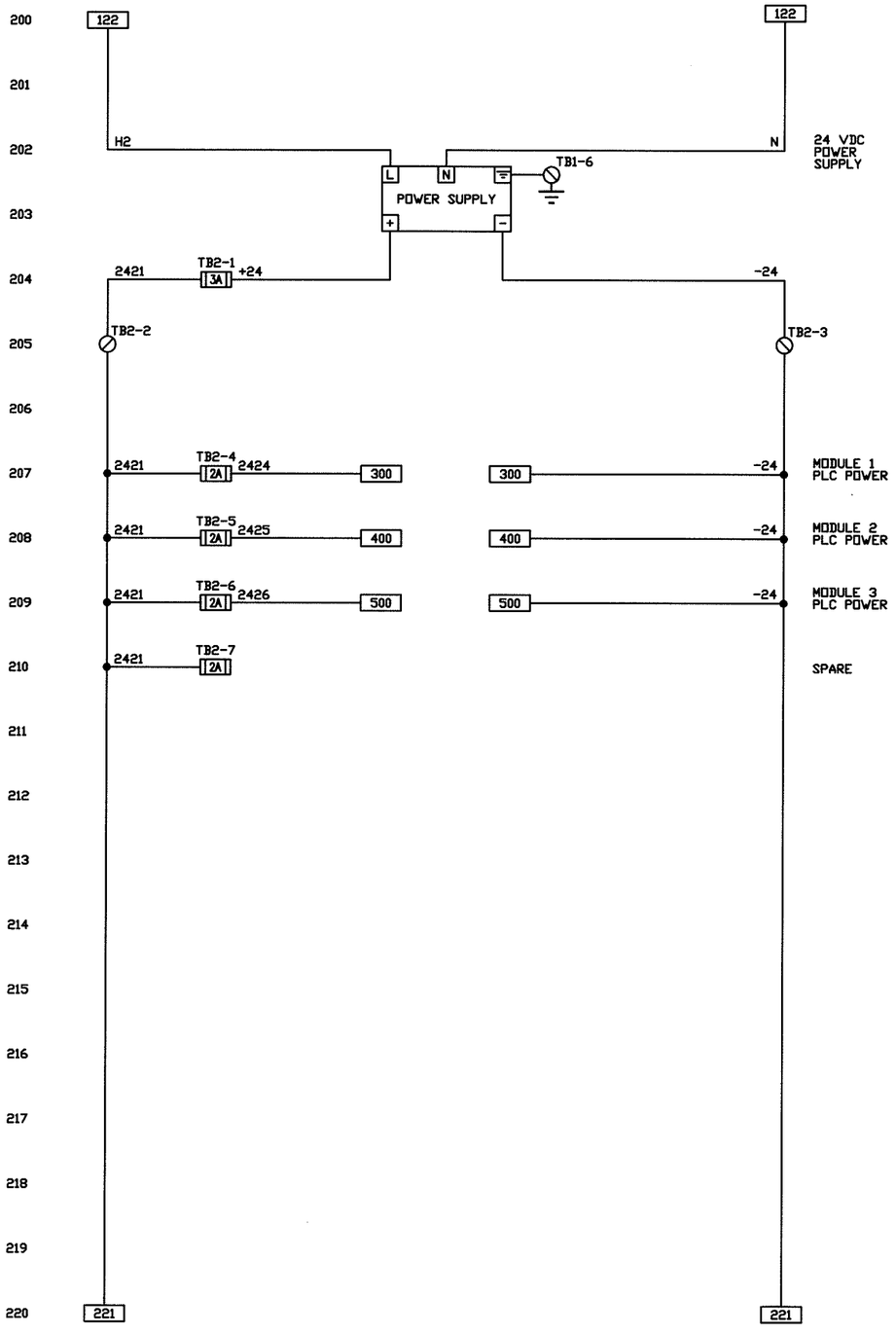

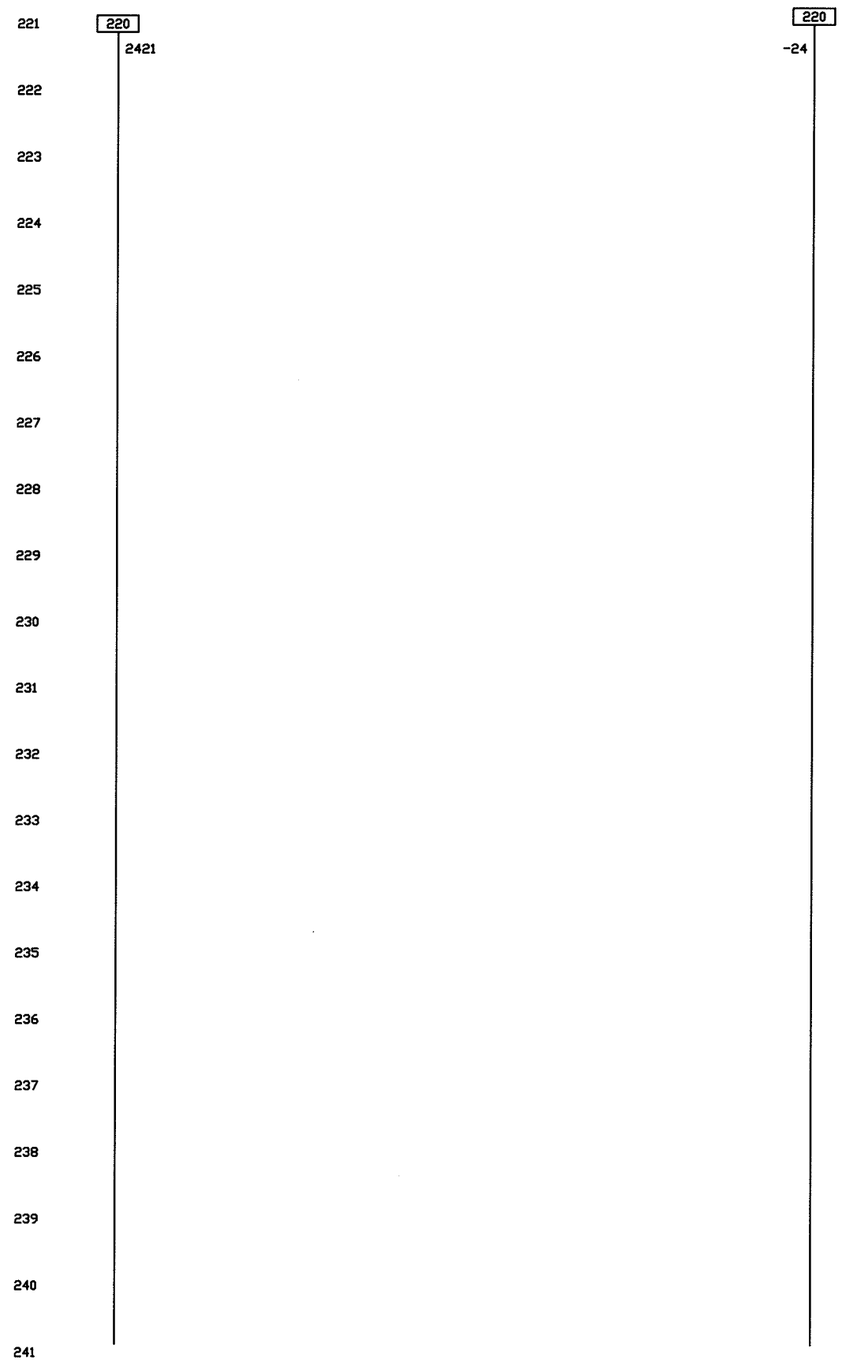

LEGEND

FIELD WIRING - - - - - -

PANEL WIRING ————————

REVISIONS				
REV	DESCRIPTION	DATE	BY	APPROVED

APPROVALS		DATE
DRAWN	R. WETSEL	12/17/07
CHECKED		
ENGINEER	R. WETSEL	
PRODUCT:		

KIMARK SYSTEMS INC.
GRAND PRAIRIE, TEXAS

CITY OF ROCKWALL
COUNTRY LANE ELEVATED TANK
SCADA PANEL 24 VDC POWER DISTRIBUTION

SIZE D | DWG NO. E102 | REV B

SCALE: DO NOT SCALE DRAWING SHEET 4 OF 7

PLC MODULE 1 ROW 3
AAI 030 00

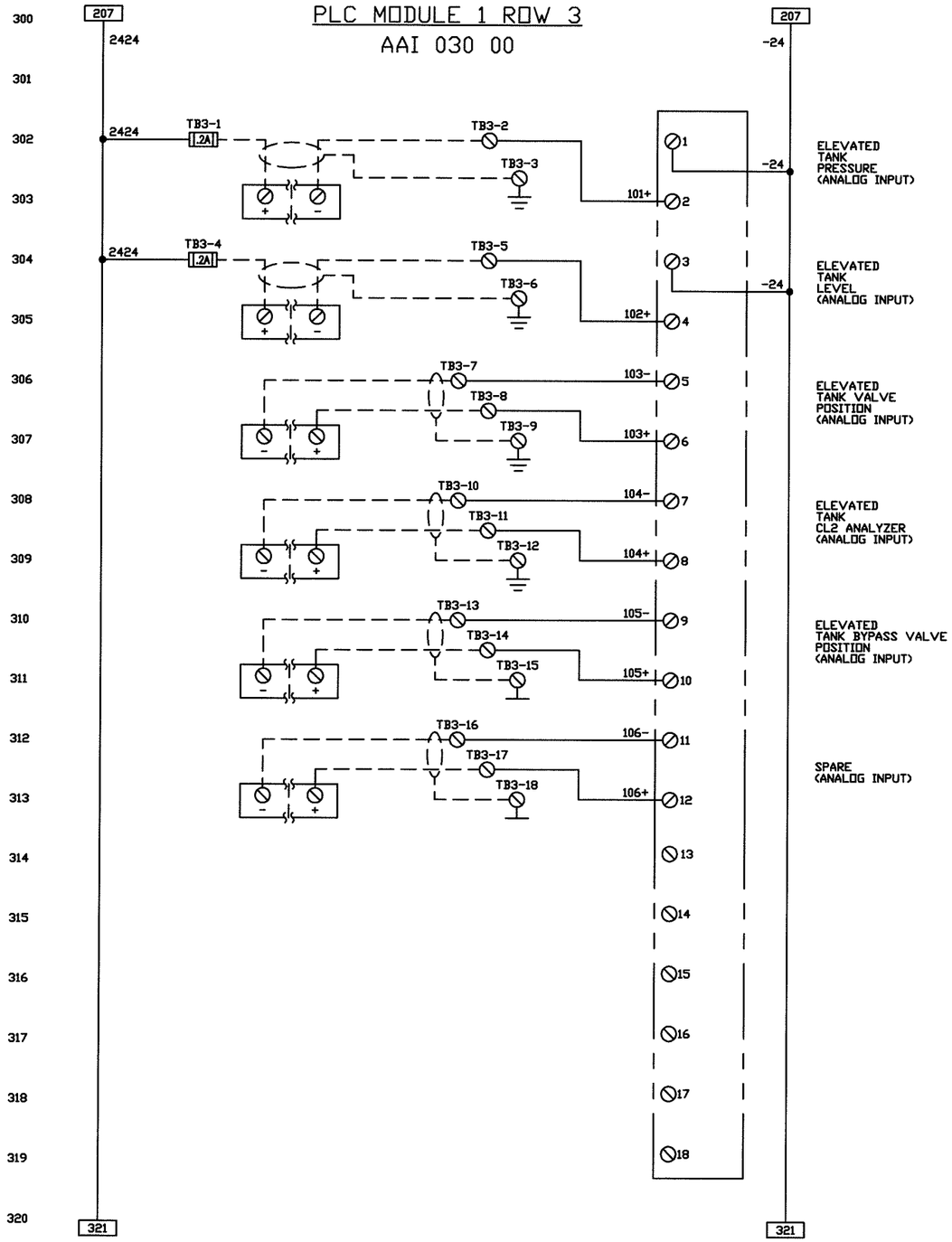

PLC MODULE 1 ROW 2
AAI 030 00

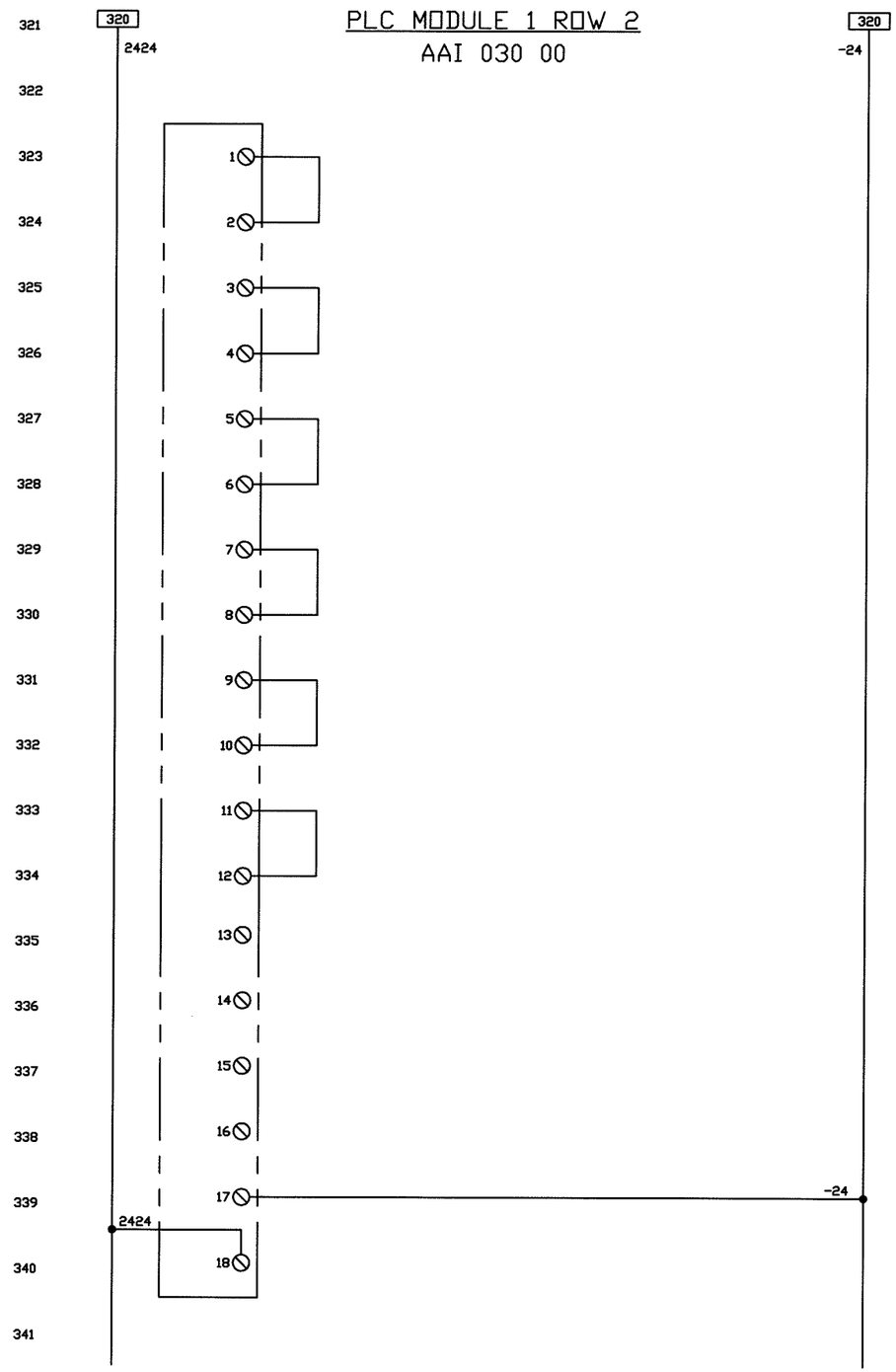

LEGEND

FIELD WIRING - - - - -

PANEL WIRING ————

REVISIONS				
REV	DESCRIPTION	DATE	BY	APPROVED

APPROVALS		DATE
DRAWN	R. WETSEL	12/17/07
CHECKED		
ENGINEER	R. WETSEL	
PRODUCT:		

KIMARK SYSTEMS INC.
GRAND PRAIRIE, TEXAS

CITY OF ROCKWALL
COUNTRY ALNE ELEVATED TANK
PLC MODULE 1 ANALOG INPUTS

SIZE D | DWG NO. E103 | REV B

SCALE: DO NOT SCALE DRAWING SHEET 5 OF 7

PLC MODULE 2 ROW 1
ADM 350 10

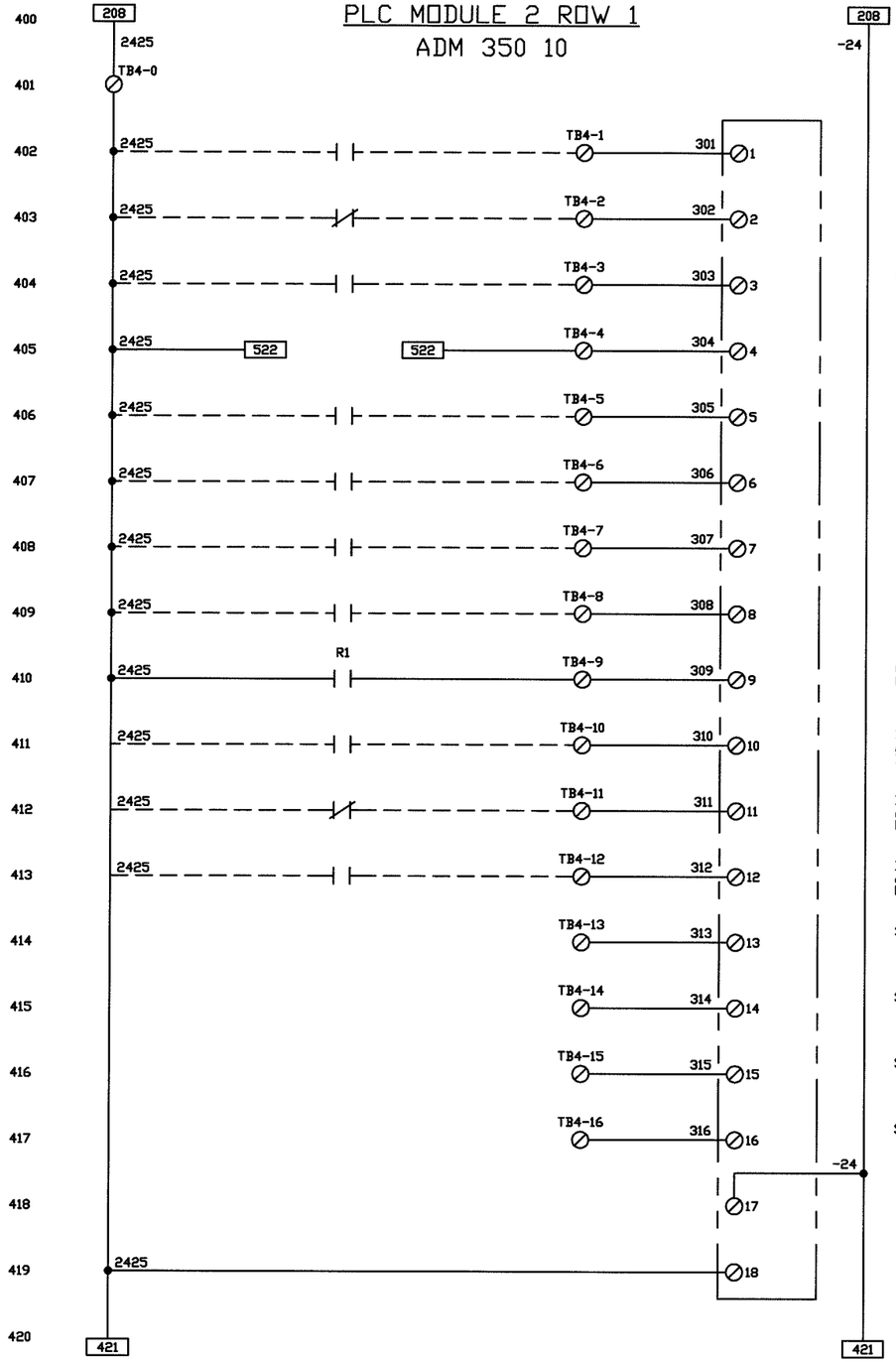

PLC MODULE 2 ROW 2
ADM 350 10

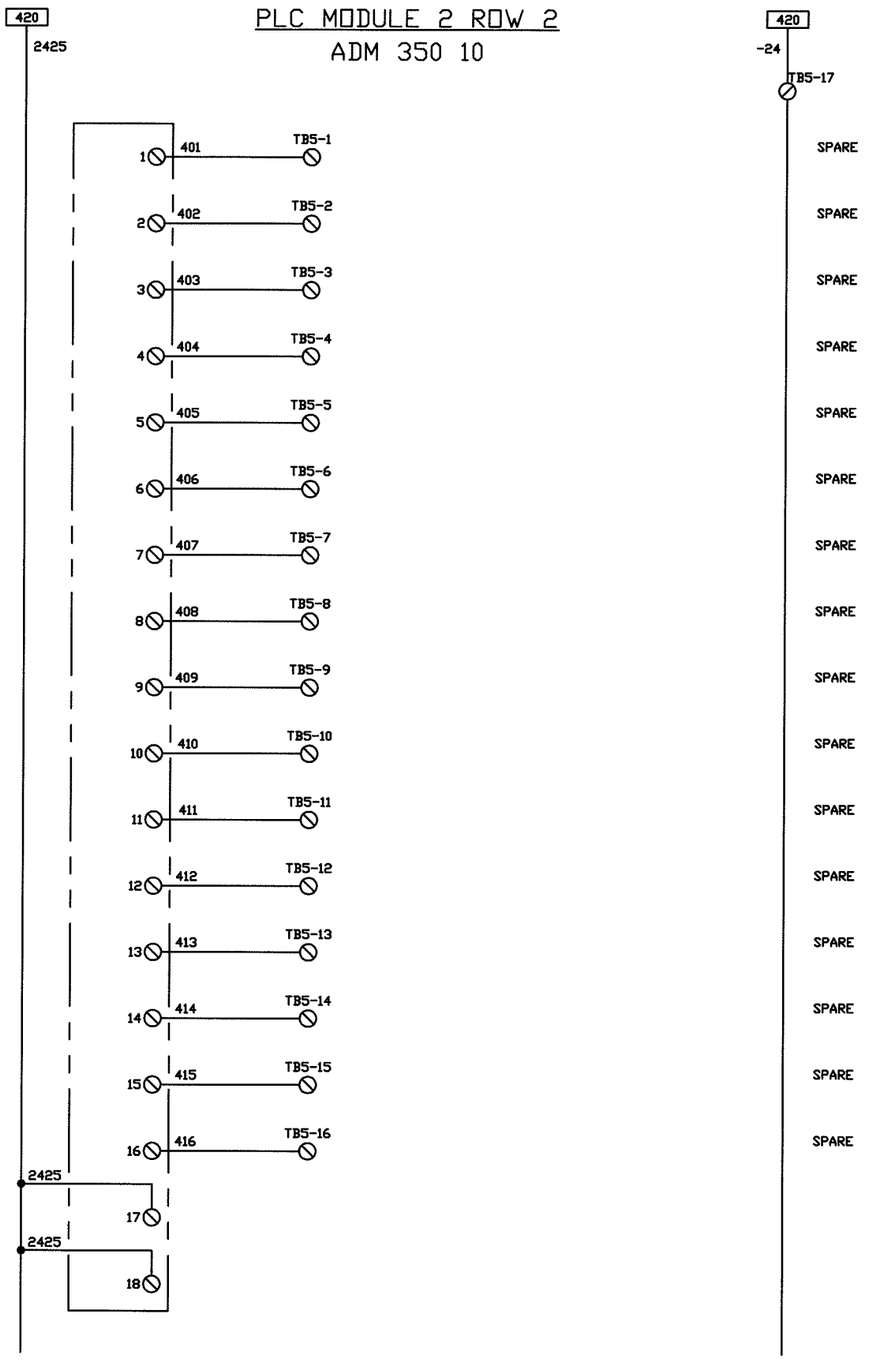

LEGEND

FIELD WIRING - - - - -

PANEL WIRING ————

REVISIONS				
REV	DESCRIPTION	DATE	BY	APPROVED

APPROVALS		DATE
DRAWN	R. WETSEL	12/17/07
CHECKED		
ENGINEER	R. WETSEL	
PRODUCT:		

KIMARK SYSTEMS INC.
GRAND PRAIRIE, TEXAS

CITY OF ROCKWALL
COUNTRY LANE ELEVATED TANK
PLC MODULE 2 DIGITAL INPUTS/OUTPUTS

SIZE D | DWG NO. E104 | REV B

SCALE: DO NOT SCALE DRAWING SHEET 6 OF 7

PLC MODULE 3 ROWS 2 & 3
AAO 921 00

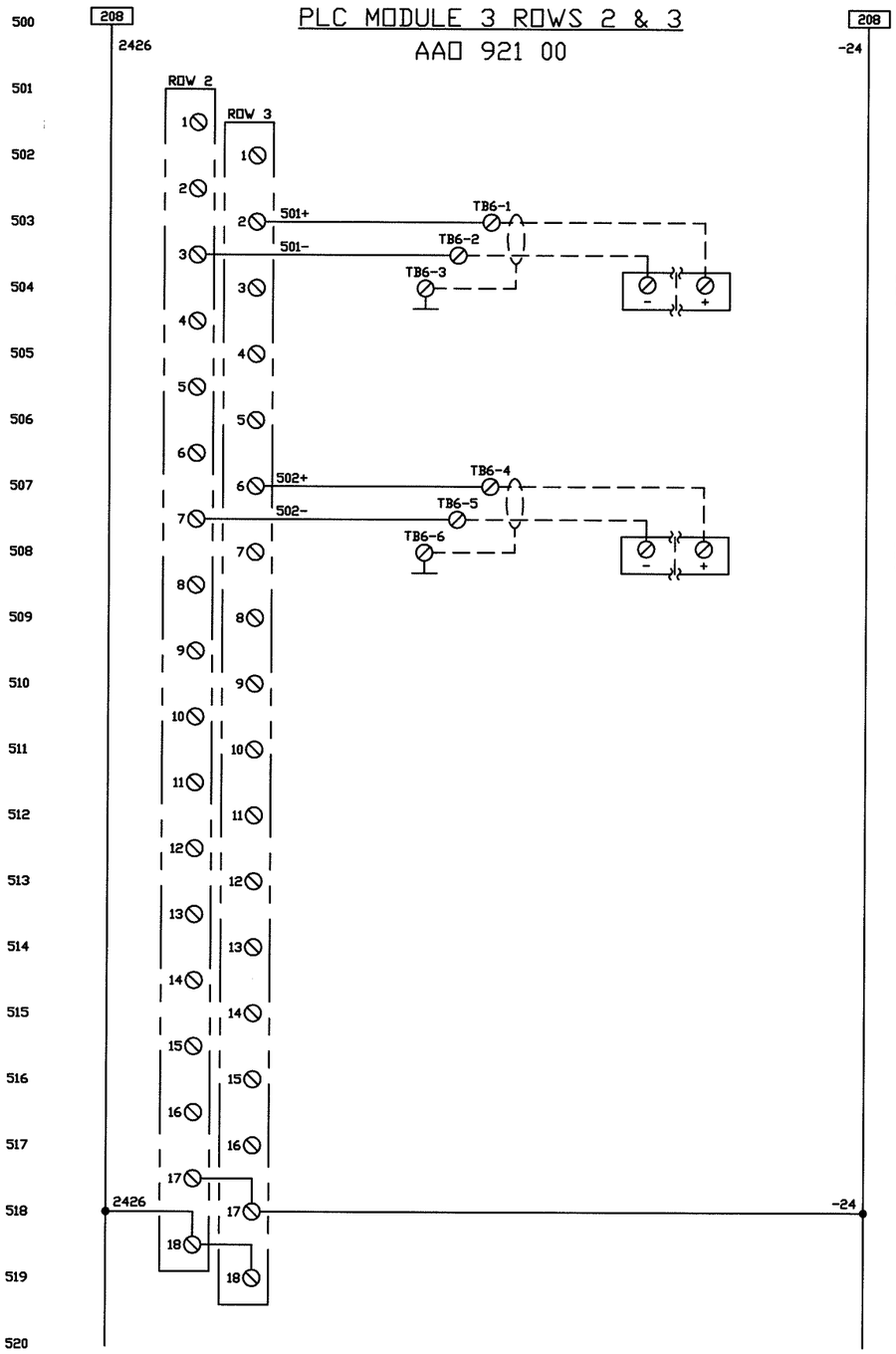

ELEVATE TANK VALVE POSITION COMMAND (ANALOG OUTPUT)

ELEVATE TANK BYPASS VALVE POSITION COMMAND (ANALOG OUTPUT)

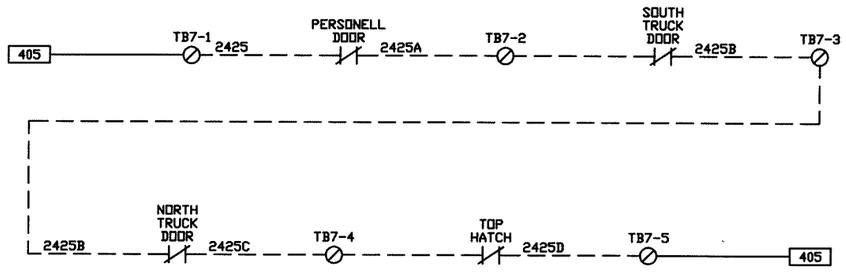

LEGEND

FIELD WIRING - - — - - -

PANEL WIRING ———————

REVISIONS				
REV	DESCRIPTION	DATE	BY	APPROVED

APPROVALS		DATE
DRAWN	R. WETSEL	12/17/07
CHECKED		
ENGINEER	R. WETSEL	
PRODUCT:		

KIMARK SYSTEMS INC.
GRAND PRAIRIE, TEXAS

CITY OF ROCKWALL
COUNTRY LANE ELEVATED TANK
PLC MODULE 3 ANALOG OUTPUTS

SIZE D | DWG NO. E105 | REV B

SCALE: DO NOT SCALE DRAWING SHEET 7 OF 7

SLIDE GATE OPERATOR

MANUFACTURER: **CHAMBERLAIN ELITE**

MODEL #: **SL 30001HP3**

SUBCONTRACTOR / SUPPLIER
SUNNYVALE FENCE COMPANY
CONTACT: DAVID GREGG
716 E. INTERSTATE 30
GARLAND, TEXAS 75043
(972) 226-1981

CHAMBERLAIN®

ELITE™

OWNER'S MANUAL

SL3000UL™

VEHICULAR SLIDE GATE OPERATOR

THE SL3000UL™ IS FOR USE ON VEHICULAR PASSAGE GATES ONLY AND NOT INTENDED FOR USE ON PEDESTRIAN PASSAGE GATES.

UL325 compliant UL991 compliant

c UL us LISTED

TABLE OF CONTENTS

⚠WARNING

Mechanical

⚠WARNING

Electrical

CAUTION

When you see these Safety Symbols and Signal Words on the following pages, they will alert you to the possibility of serious injury or death if you do not comply with the warnings that accompany them. The hazard may come from something mechanical or from electric shock. Read the warnings carefully.

When you see this Signal Word on the following pages, it will alert you to the possibility of damage to your gate and/or the gate operator if you do not comply with the cautionary statements that accompany it. Read them carefully.

IMPORTANT NOTE

- BEFORE attempting to install, operate or maintain the operator, you must read and fully understand this manual and follow all safety instructions.
- DO NOT attempt repair or service of your gate operator unless you are an Authorized Service Technician.

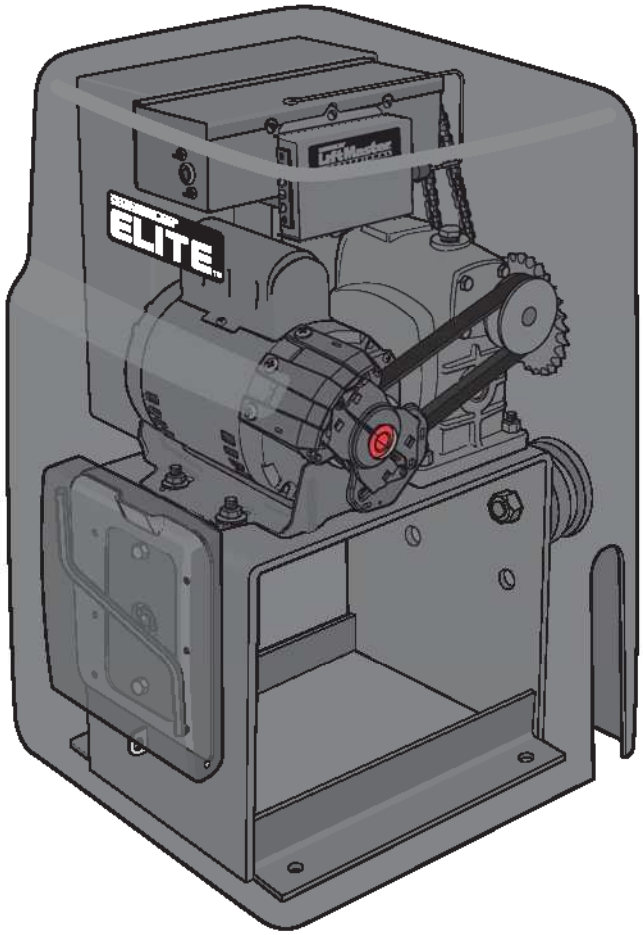

SPECIFICATIONS AND WARNINGS

Overview and Specifications 2
Model Classification 3
Safety Installation Information 4
Safety Precautions 5
Suggested Safety Protection Device Locations 6-7

INSTALLATION

Installation Setups 8
Safety Catch Rollers and Gate Rail Stops 9
Mounting Operator 10
Chain Installation 11
Control Board Description 12
Surge Suppressor Terminal Connections 13

WIRING

Earth Ground Rod Installation 14
120 Vac Power Connection 15
Heater Power Connection 15
Linking Master/Second Operators 16
Solenoid/Maglock Connection 17
DC2000™ Connection 18-19
Plug-In Loop Detector Wiring 20
120 Vac External Loop Detector Wiring 21
Entrapment Protection Devices (Contact Sensors) 22
Entrapment Protection Devices (Non-Contact Sensors) 23
Omni Option Board Connections (Optional) 24

ADJUSTMENTS

Set Gate Opening Direction 25
Limit Switch Adjustments 25
Radio Receiver Programming 26-27
Setting the Timer (On, Off) 28
Adjusting Reversing Sensor(s) 29

MAINTENANCE

Maintenance 30

OPERATION

Built-In Reset Switch 31
Audio Alarm 31
Emergency Manual Release ***32***

ACCESSORIES 33

WIRING DIAGRAMS 34-41

TROUBLESHOOTING 42-43

REPAIR PARTS

Repair Part Illustrations 44
How to Order Repair Parts 45
Part Names and Numbers 45

INSTALLATION CHECKLIST 47

WARRANTY POLICY 48

Specifications and Warnings

SL3000UL™ MODELS OVERVIEW

Single Motor Models

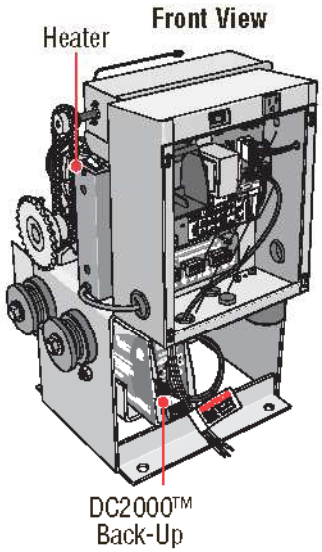

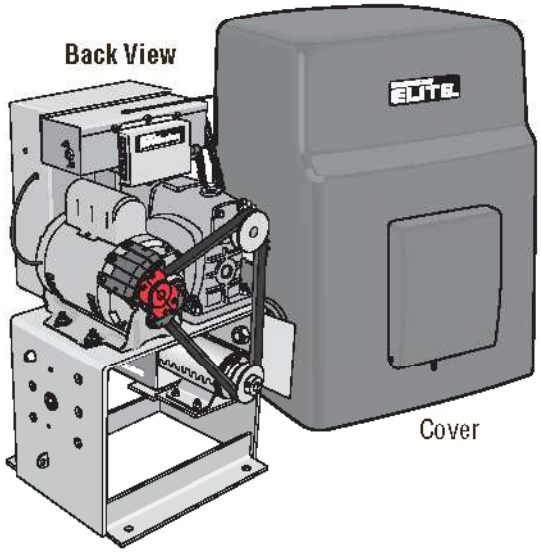

SL3000UL™ (Single Motor)
1/2 hp Motor, 120 Vac, 4 Amp.
Maximum Gate Length – 37 ft.
Maximum Gate Weight – 1000 lbs.
Maximum Pull – 105 lbs.

SL3000ULDC™ (Single Motor)
1/2 hp Motor, DC2000™, 120 Vac, 4 Amp.
Maximum Gate Length – 37 ft.
Maximum Gate Weight – 1000 lbs.
Maximum Pull – 105 lbs.

SL3000ULH™ (Single Motor)
1/2 hp Motor, 120 Vac, 4 Amp., Heater 3 Amp
Maximum Gate Length – 37 ft.
Maximum Gate Weight – 1000 lbs.
Maximum Pull – 105 lbs.

SL3000ULDCH™ (Single Motor)
1/2 hp Motor, DC2000™, 120 Vac, 4 Amp., Heater 3 Amp
Maximum Gate Length – 37 ft.
Maximum Gate Weight – 1000 lbs.
Maximum Pull – 105 lbs.

All operators come with 2 warning placards and a warranty card.

Dual Motor and 1 HP Models

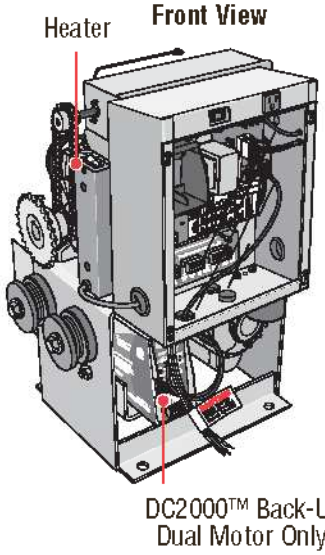

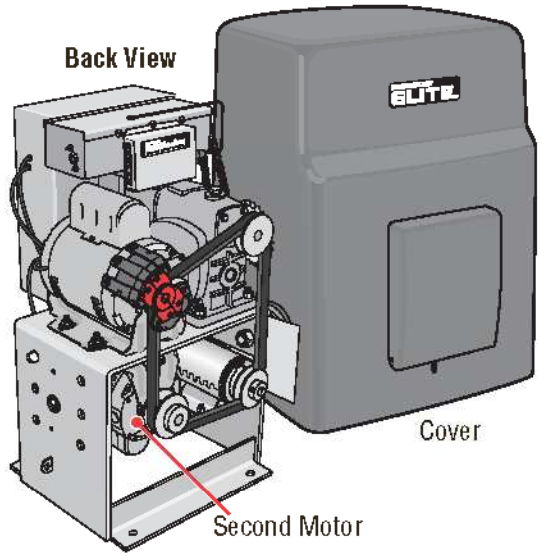

SL3000ULDM™ (Dual Motor)
Two-1/2 hp Motors, 120 Vac, 4.7 Amp.
Maximum Gate Length – 37 ft.
Maximum Gate Weight – 800 lbs.
Maximum Pull – 100 lbs.

SL3000ULDMDC™ (Dual Motor)
Two-1/2 hp Motors, DC2000™, 120 Vac, 4.7 Amp.
Maximum Gate Length – 37 ft.
Maximum Gate Weight – 800 lbs.
Maximum Pull – 100 lbs.

SL3000ULDMH™ (Dual Motor)
Two-1/2 hp Motors, 120 Vac, 4.7 Amp., Heater 3 Amp
Maximum Gate Length – 37 ft.
Maximum Gate Weight – 800 lbs.
Maximum Pull – 100 lbs.

SL3000ULDMDCH™ (Dual Motor)
Two-1/2 hp Motors, DC2000™, 120 Vac, 4.7 Amp., Heater 3 Amp
Maximum Gate Length – 37 ft.
Maximum Gate Weight – 800 lbs.
Maximum Pull – 100 lbs.

SL3000UL1HP™ (1 Horse Power)
Two-1/2 hp Motors, 120 Vac, 8.4 Amp.
Maximum Gate Length – 37 ft.
Maximum Gate Weight – 2000 lbs.
Maximum Pull – 180 lbs.

SL3000UL1HPH™ (1 Horse Power)
Two-1/2 hp Motors, 120 Vac, 8.7 Amp., Heater 3 Amp
Maximum Gate Length – 37 ft.
Maximum Gate Weight – 2000 lbs.
Maximum Pull – 180 lbs.

NOTE : *The 1 HP models Can Not have the DC2000™ Battery Backup system.*

UL325 MODEL CLASSIFICATIONS

The SL3000UL™ is intended for use in vehicular slide gate applications:

Class I – Residential vehicular gate operator

A vehicular gate operator (or system) intended for use in a home of one-to four single family dwellings, or a garage or parking area associated therewith.

Class II – Commercial/General access vehicular gate operator

A vehicular gate operator (or system) intended for use in a commercial location or building such as a multi-family housing unit (five or more single family units) hotel, garage, retail store or other building servicing the general public.

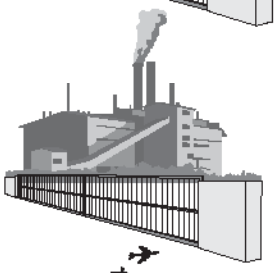

Class III – industrial/limited access vehicular gate operator

A vehicular gate operator (or system) intended for use in a industrial location or building such as a factory or loading dock area or other location not intended to service the general public.

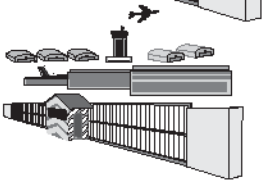

Class IV – Restricted access vehicular gate operator

A vehicular gate operator (or system) intended for use in a guarded industrial location or building such as an airport security area or other restricted access locations not servicing the general public, in which unauthorized access is prevented via supervision by security personnel.

UL325 ENTRAPMENT PROTECTION REQUIREMENTS

This chart illustrates the entrapment protection requirements for each of the four UL325 classes.

GATE OPERATOR ENTRAPMENT PROTECTION

UL325 Installation Classification	*Slide Gate Operator*		Swing & Gate Barrier (Arm) Operator	
	Primary Type	Secondary Type	Primary Type	Secondary Type
Class I Class II	**A**	**B1**, **B2** or **D**	A or C	A, B1, C, or D, B2
Class III	**A**, **B1**, **B2** or **B2**	**A**, **B1**, **D** or **E**	A, B1, C or C	D or E
Class IV	**A**, **B1**, **B2** or **D**	**A**, **B1**, **B2**, **D** or **E**	A, B1, C or D	A, B1, C, D or E

In order to complete a proper installation you must satisfy the entrapment protection chart shown. That means that the installation must have one *primary* means of entrapment protection and one independent *secondary* means of entrapment protection. Both primary and secondary entrapment protection methods must be designed, arranged or configured to protect against entrapments in both the open and close directions of gate travel.

For Example: For a gate system that is installed on a single-family residence (UL325 Class I) you must provide the following: As your *primary type* of entrapment protection you must provide

- *Type A* - inherent (built into the operator) entrapment sensing and at least one of the following as your *secondary entrapment protection:*
- *Type B1* - Non-contact sensors such as photo-eyes,
- *Type B2* - Contact sensors such as gate edges or
- *Type D* - Constant pressure control.
- *Type E* - Built-in audio alarm.

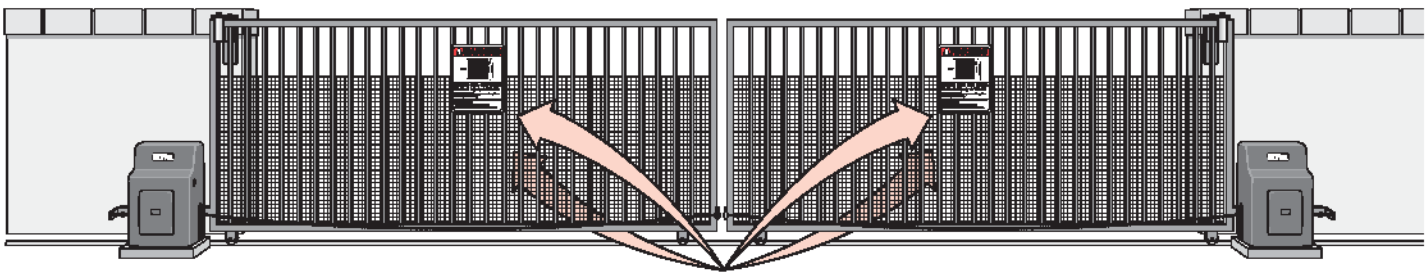

NOTE: *UL requires that all installations must have warning signs placed in plain view on both sides of the gate to warn pedestrians of the dangers of motorized gate systems.*

SAFETY INSTALLATION INFORMATION

1. Vehicular gate systems provide convenience and security. Gate systems are comprised of many component parts. The gate operator is only one component. Each gate system is specifically designed for an individual application.

2. Gate operating system designers, installers and users must take into account the possible hazards associated with each individual application. Improperly designed, installed or maintained systems can create risks for the user as well as the bystander. Gate systems design and installation must reduce public exposure to potential hazards.

3. A gate operator can create high levels of force in its function as a component part of a gate system. Therefore, safety features must be incorporated into every design. Specific safety features include:
   - Gate Edges
   - Guards for Exposed Rollers
   - Photoelectric Sensors
   - Screen Mesh
   - Vertical Posts
   - Instructional and Precautionary Signage

4. Install the gate operator only when:
   a. The operator is appropriate for the construction and the usage class of the gate.
   b. All openings of a horizontal slide gate are guarded or screened from the bottom of the gate to a minimum of 4' (1.2 m) above the ground to prevent a 2 1/4" (6 cm) diameter sphere from passing through the openings anywhere in the gate, and in that portion of the adjacent fence that the gate covers in the open position.
   c. All exposed pinch points are eliminated or guarded, and guarding is supplied for exposed rollers.

5. The operator is intended for installation only on gates used for vehicles. Pedestrians must be supplied with a separate access opening. The pedestrian access opening shall be designed to promote pedestrian usage. Locate the gate such that persons will not come in contact with the vehicular gate during the entire path of travel of the vehicular gate.

6. The gate must be installed in a location so that enough clearance is supplied between the gate and adjacent structures when opening and closing to reduce the risk of entrapment. Swinging gates shall not open into public access areas.

7. The gate must be properly installed and work freely in both directions prior to the installation of the gate operator.

8. Controls intended for user activation must be located at least six feet (6') away from any moving part of the gate and where the user is prevented from reaching over, under, around or through the gate to operate the controls. Outdoor or easily accessible controls shall have a security feature to prevent unauthorized use.

9. The Stop and/or Reset (if provided separately) must be located in the line-of-sight of the gate. Activation of the reset control shall not cause the operator to start.

10. A minimum of two (2) WARNING SIGNS shall be installed, one on each side of the gate where easily visible.

11. For a gate operator utilizing a non-contact sensor:
    a. Reference owner's manual regarding placement of non-contact sensor for each type of application.
    b. Care shall be exercised to reduce the risk of nuisance tripping, such as when a vehicle trips the sensor while the gate is still moving.
    c. One or more non-contact sensors shall be located where the risk of entrapment or obstruction exists, such as the perimeter reachable by a moving gate or barrier.

12. For a gate operator utilizing a contact sensor such as an edge sensor:
    a. One or more contact sensors shall be located where the risk of entrapment or obstruction exists, such as at the leading edge, trailing edge and post mounted both inside and outside of a vehicular horizontal slide gate.
    b. One or more contact sensors shall be located at the bottom edge of a vehicular vertical lift gate.
    c. A hard wired contact sensor shall be located and its wiring arranged so the communication between the sensor and the gate operator is not subject to mechanical damage.
    d. A wireless contact sensor such as the one that transmits radio frequency (RF) signals to the gate operator for entrapment protection functions shall be located where the transmission of the signals are not obstructed or impeded by building structures, natural landscaping or similar obstruction. A wireless contact sensor shall function under the intended end-use conditions.
    e. One or more contact sensors shall be located on the inside and outside leading edge of a swing gate. Additionally, if the bottom edge of a swing gate is greater than 6" (152 mm) above the ground at any point in its arc of travel, one or more contact sensors shall be located on the bottom edge.
    f. One or more contact sensors shall be located at the bottom edge of a vertical barrier (arm).

SAFETY PRECAUTIONS

THE SL3000UL™ IS FOR USE ON VEHICULAR PASSAGE GATES ONLY AND NOT INTENDED FOR USE ON PEDESTRIAN PASSAGE GATES.

⚠WARNING

To prevent SERIOUS INJURY or DEATH from a moving gate:

- Entrapment protection devices MUST be installed to protect anyone who may come near a moving gate.
- Locate entrapment protection devices to protect in BOTH the open and close gate cycles.
- Locate entrapment protection devices to protect between moving gate and RIGID objects, such as posts or walls.

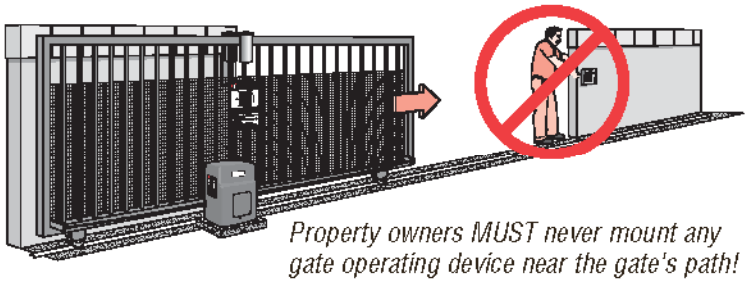

Property owners MUST never mount any gate operating device near the gate's path!

Property owners MUST never allow anyone to hang or ride on the gate!

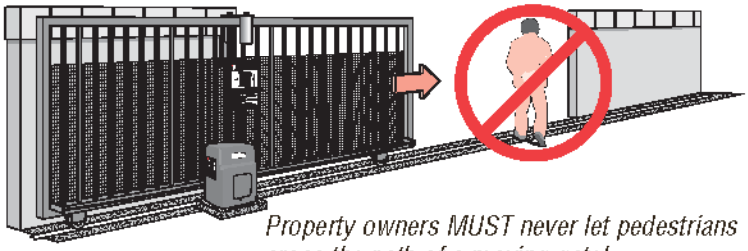

Property owners MUST never let pedestrians cross the path of a moving gate!

WARNING SIGN PLACEMENT

⚠WARNING

To prevent SERIOUS INJURY or DEATH from a moving gate:
Install Warning signs on BOTH sides of EACH gate,
in PLAIN VIEW.

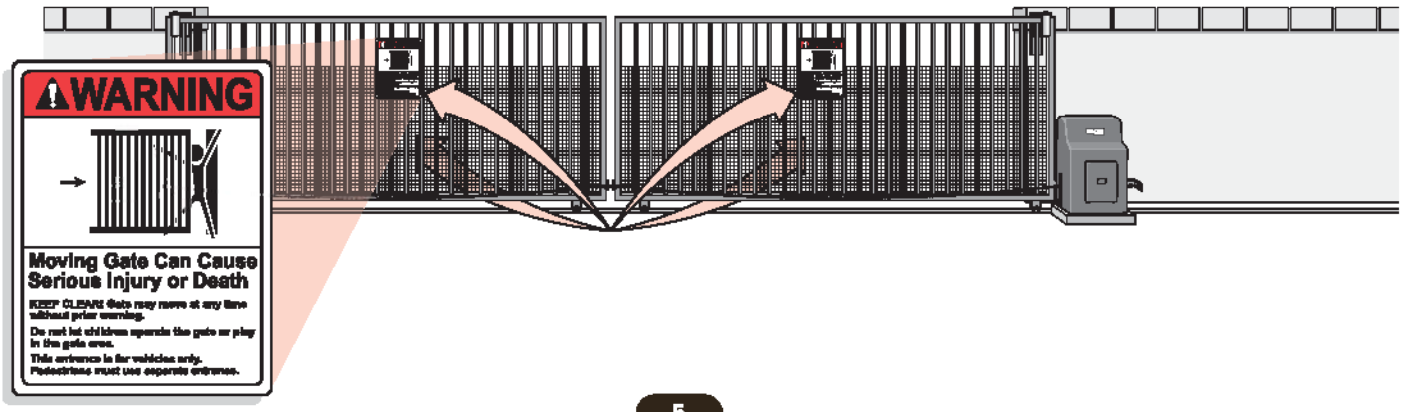

SUGGESTED SAFETY PROTECTION DEVICE LOCATIONS

⚠WARNING

To prevent SERIOUS INJURY or DEATH from a moving gate:

- Entrapment protection devices MUST be installed to protect anyone who may come near a moving gate.
- Locate entrapment protection devices to protect in BOTH the open and close gate cycles.
- Locate entrapment protection devices to protect between moving gate and RIGID objects, such as posts or walls.

Non-Contact Sensors (Photo Electric Sensors)

Install **photo electric sensors** to protect against any entrapment or safety conditions encountered in your gate application.

See Entrapment Protection Devices.

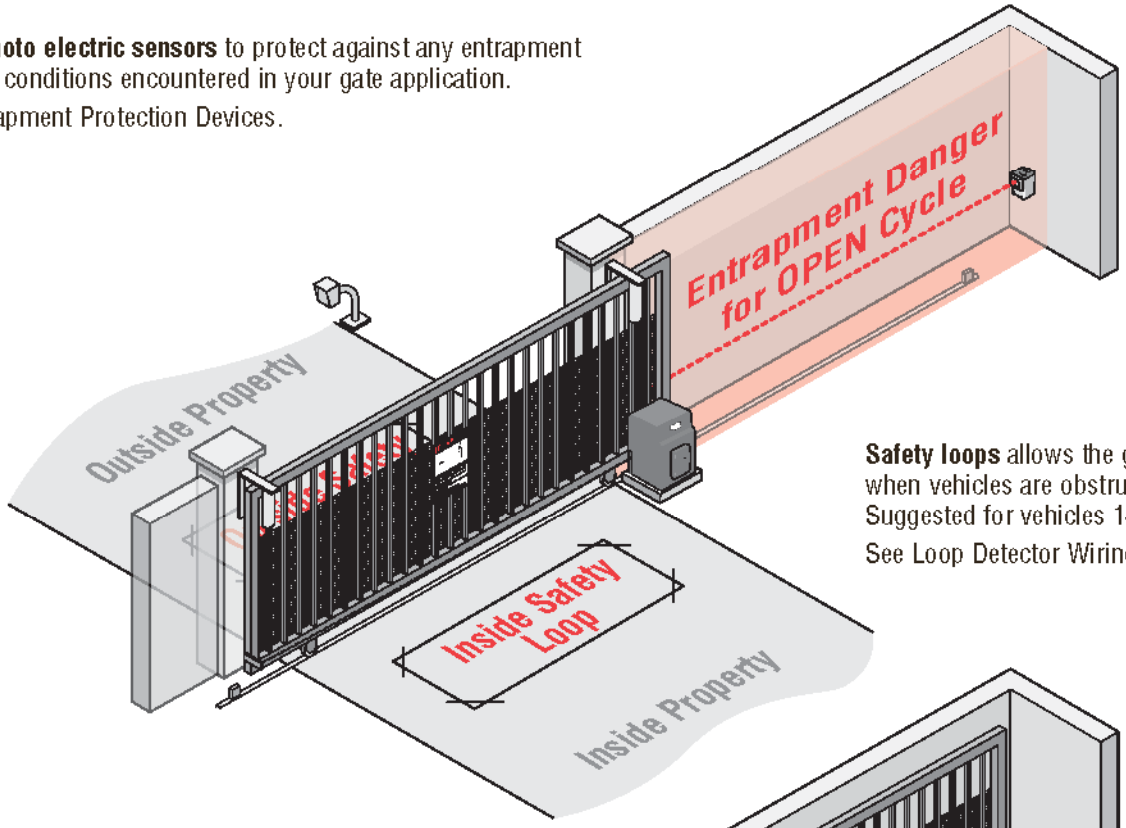

Safety loops allows the gate to stay open when vehicles are obstructing the gate path. Suggested for vehicles 14 feet or longer.

See Loop Detector Wiring.

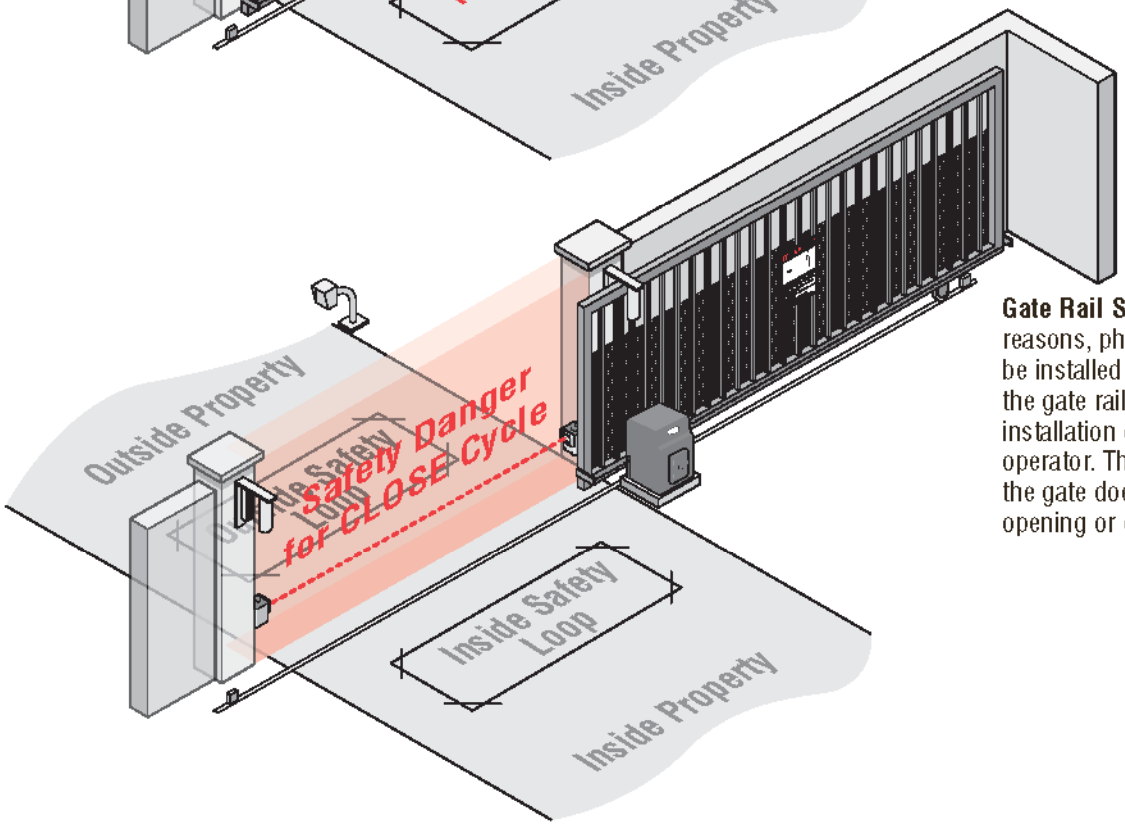

Gate Rail Stops For safety reasons, physical stops MUST be installed on both ends of the gate rail prior to installation of the gate operator. This will assure that the gate does not derail while opening or closing fully.

SUGGESTED SAFETY PROTECTION DEVICE LOCATIONS

⚠WARNING

To prevent SERIOUS INJURY or DEATH from a moving gate:

- Entrapment protection devices MUST be installed to protect anyone who may come near a moving gate.
- Locate entrapment protection devices to protect in BOTH the open and close gate cycles.
- Locate entrapment protection devices to protect between moving gate and RIGID objects, such as posts or walls.

Contact Sensors (Edge Sensors)

Install **edge sensors** to protect against any entrapment or safety conditions encountered in your gate application.

See Entrapment Protection Devices.

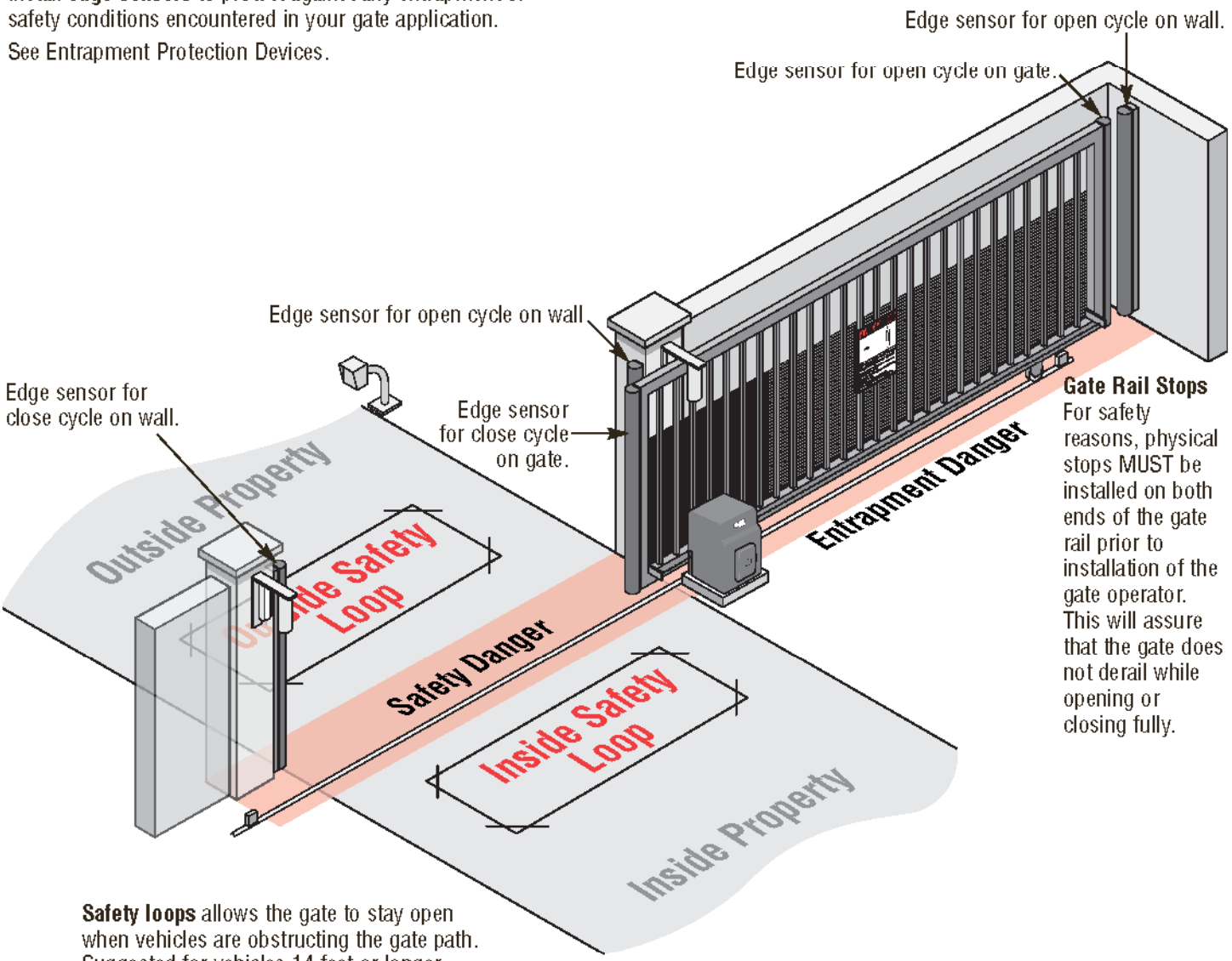

Gate Rail Stops
For safety reasons, physical stops MUST be installed on both ends of the gate rail prior to installation of the gate operator. This will assure that the gate does not derail while opening or closing fully.

Safety loops allows the gate to stay open when vehicles are obstructing the gate path. Suggested for vehicles 14 feet or longer.

See Loop Detector Wiring.

Installation

INSTALLATION SETUPS

Front or Rear Position with Single Operator

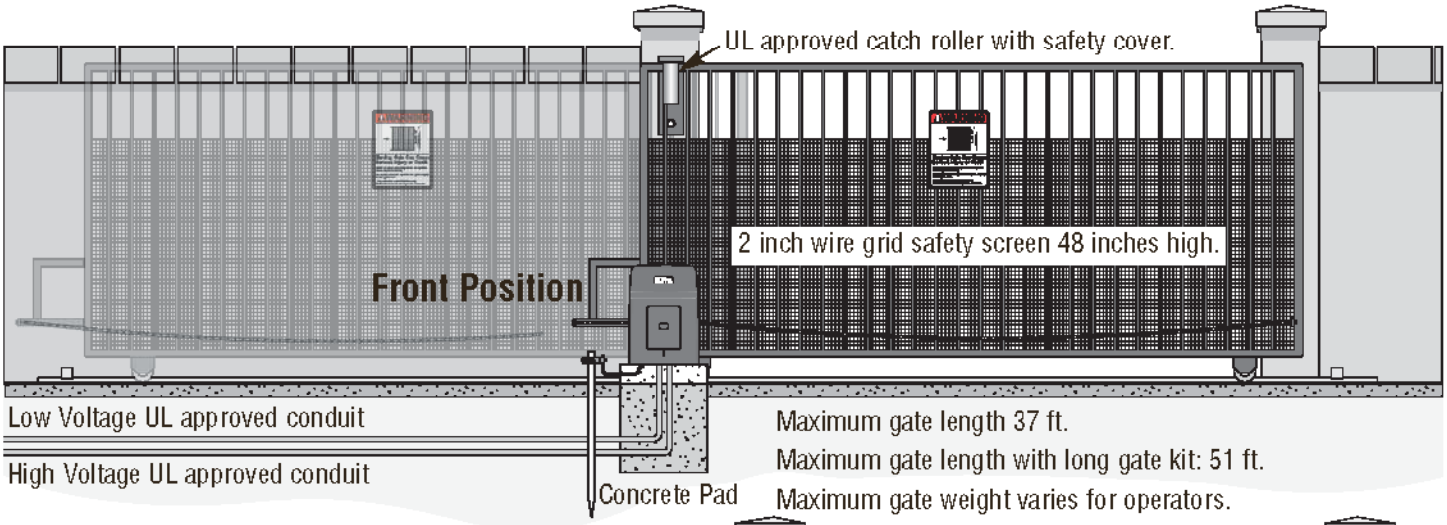

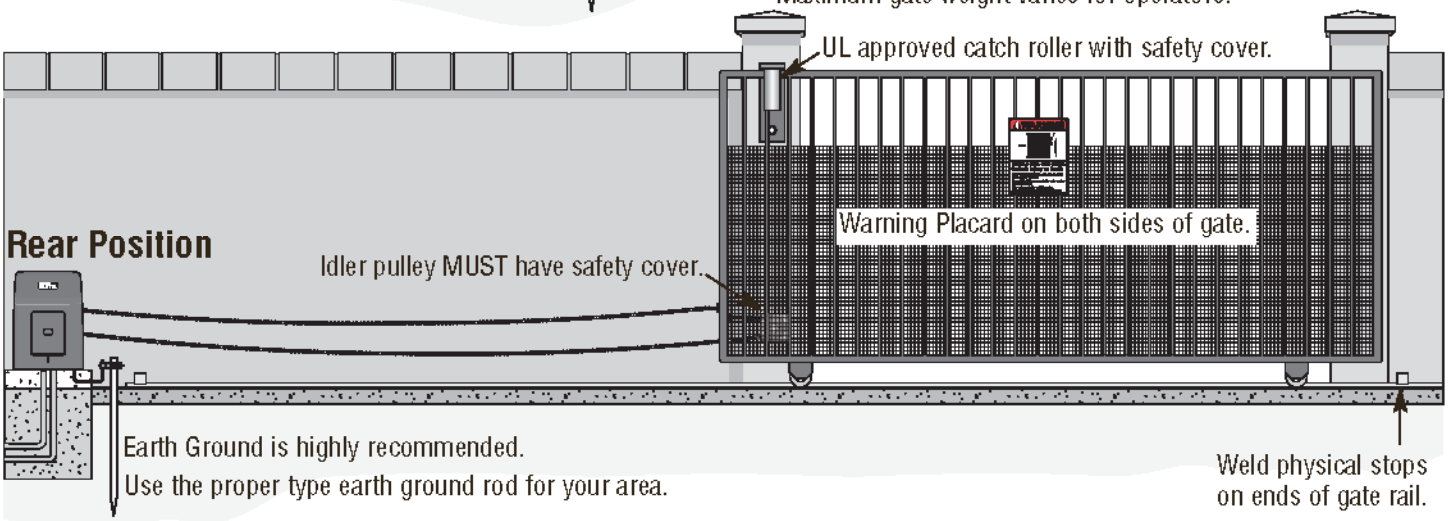

Master/Second Operators

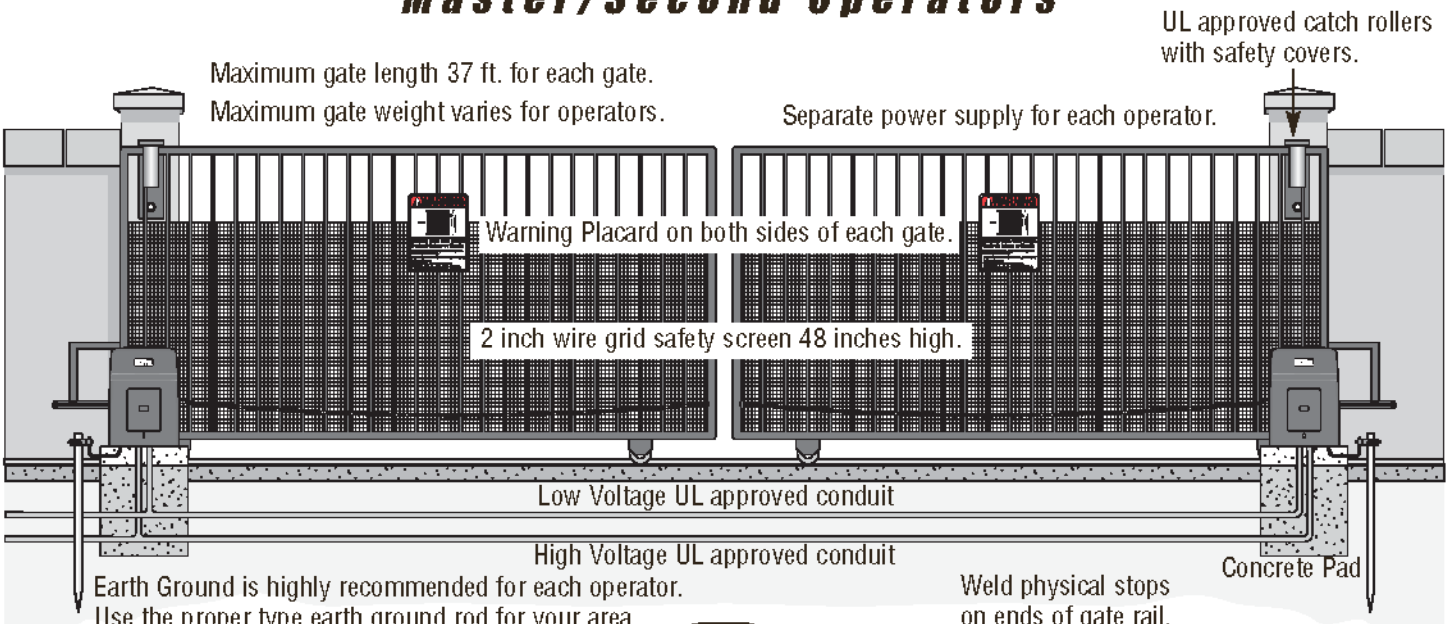

SAFETY CATCH ROLLERS AND GATE RAIL STOPS

Safety Catch Rollers

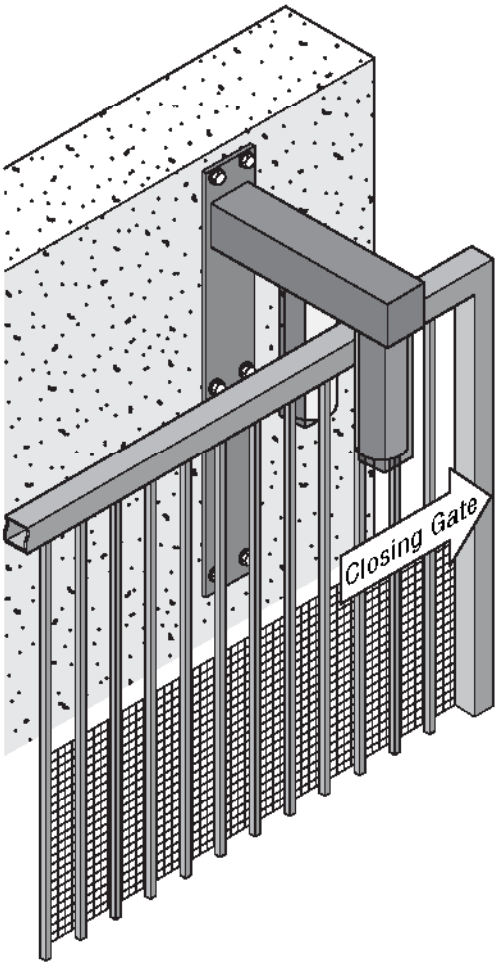

It is only recommended installing **catch rollers with safety covers** on the side of a post or wall with a minimal distance of **half an inch** between the rollers and gate.

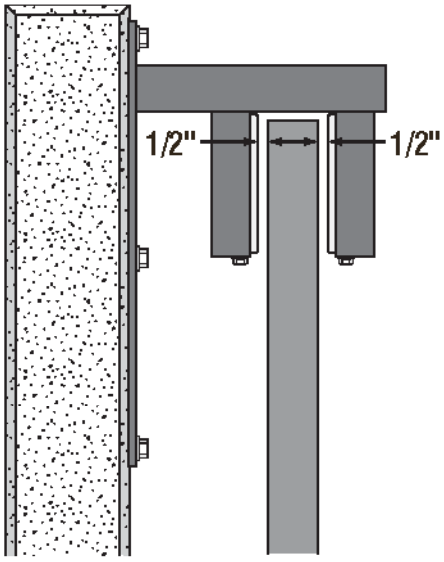

End View of Gate and Wall

DO NOT use a Gate Catch Post.

Because the coasting distance may vary due to changes in temperature, it is **NOT** recommended to install a stop or catch post in **front** of the gates path. To do so will cause the gate to hit the post in certain instances.

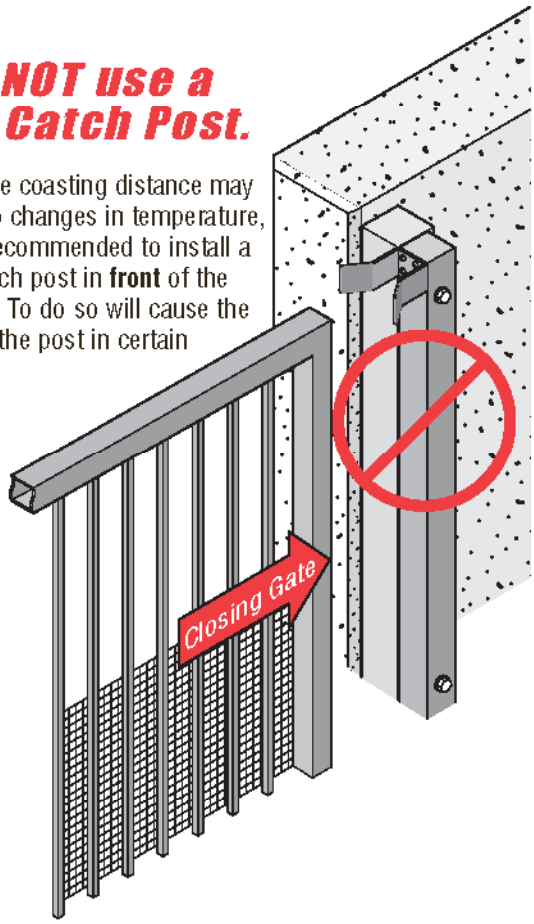

Gate Rail Stop

When fully opened, the end of the sliding gate should stop at least **five** inches from an obstructing wall.

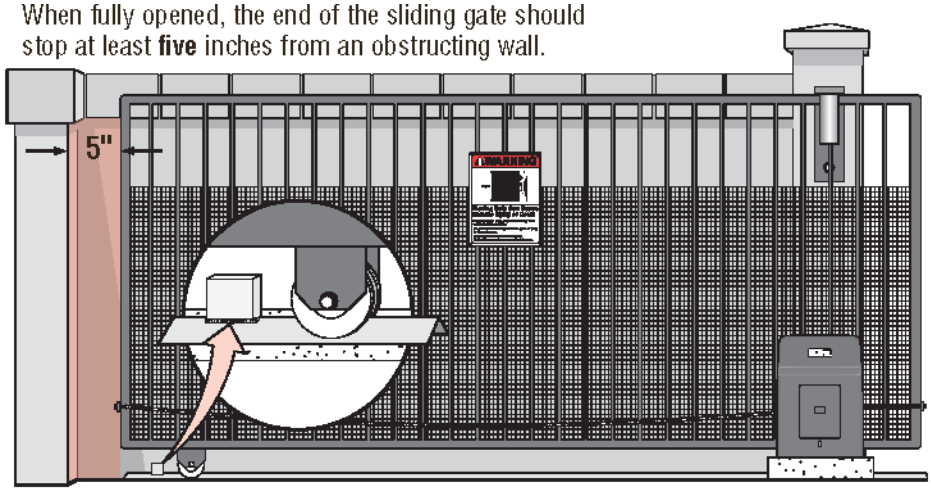

NOTE: *For safety reasons, physical stops MUST be installed on both ends of the gate rail prior to installation of the gate operator. This will assure that the gate does not derail while opening or closing fully.*

MOUNTING OPERATOR

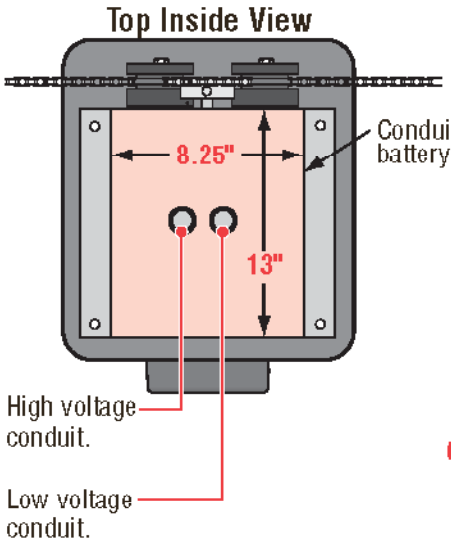

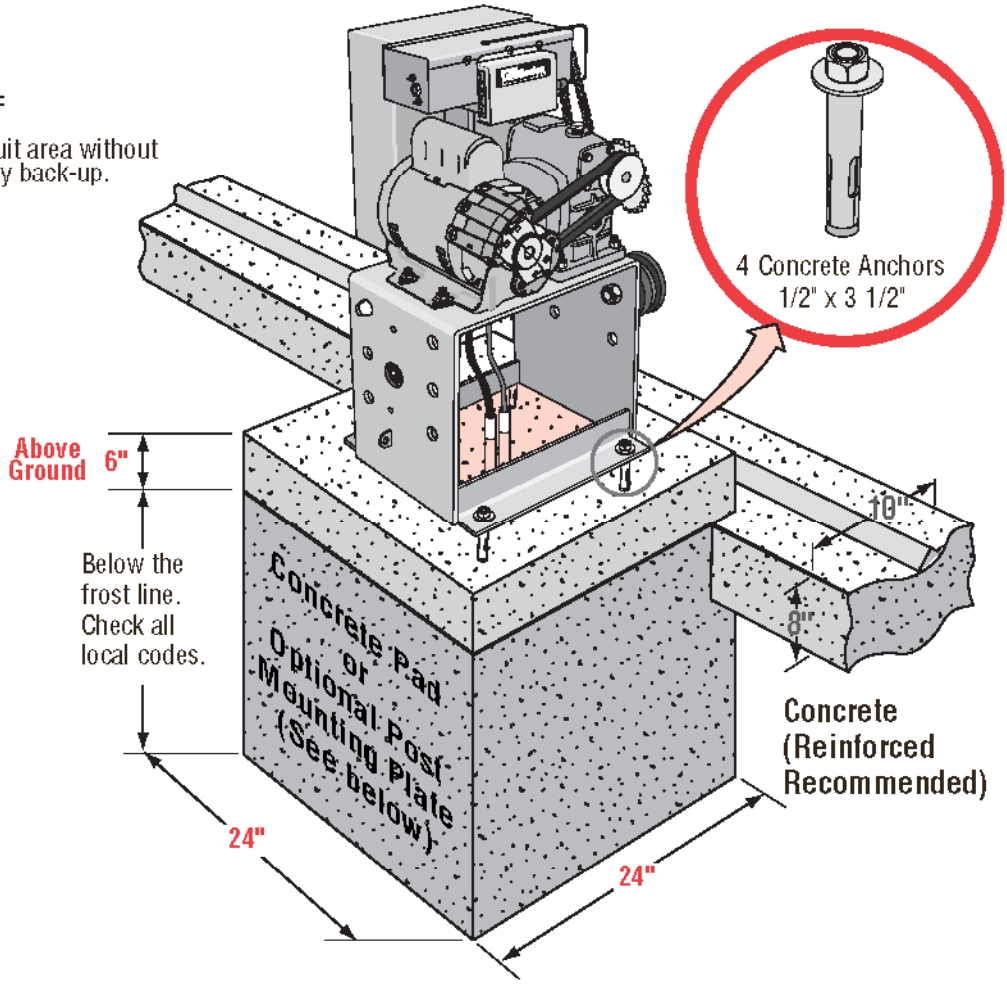

Suggested installation for dirt ground. The measurements depend on the type of ground. (ie., asphalt, cement, dirt)

Check local building codes before installation.

POST MOUNTING PLATE (OPTIONAL)

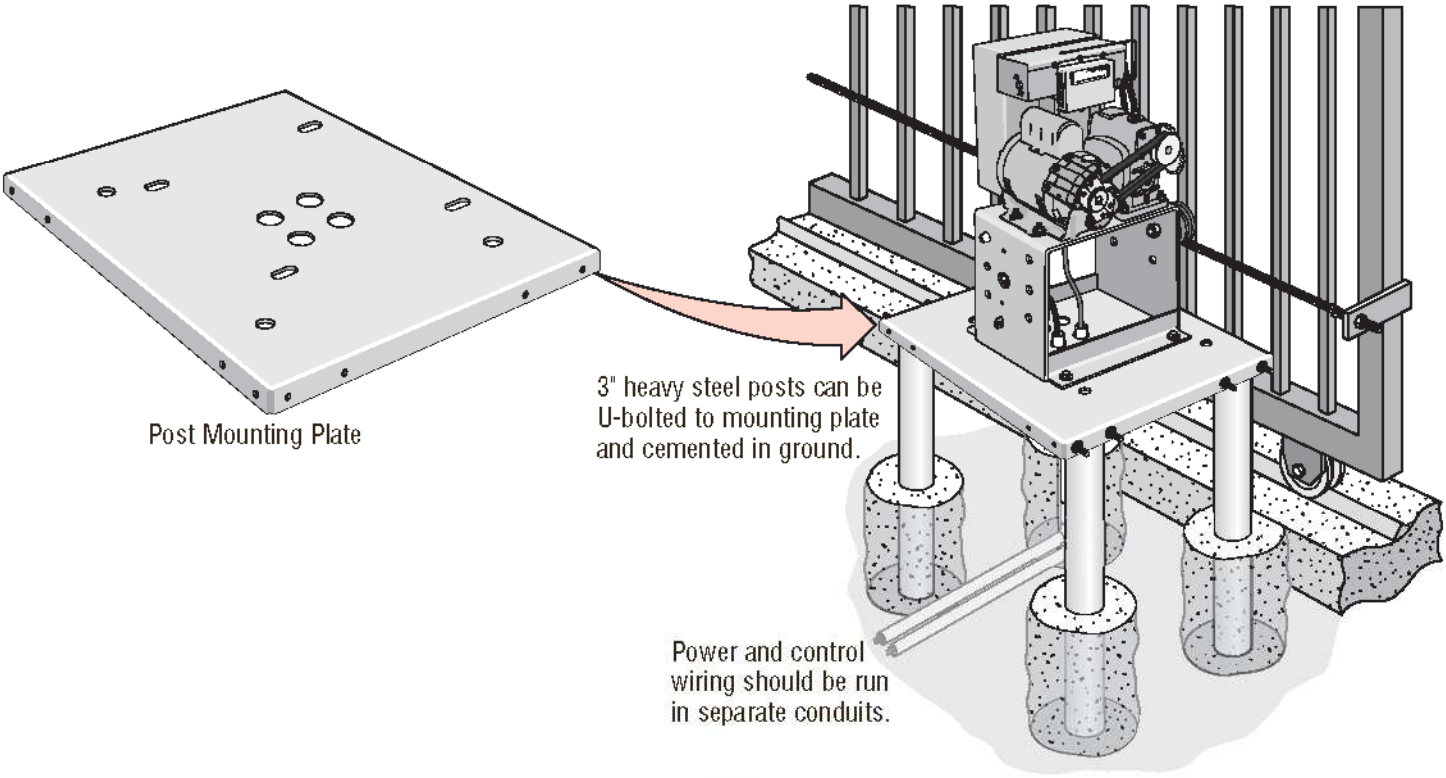

CHAIN INSTALLATION TYPES

Drawings not to scale

Front Operator Position

Weld rear bracket with gate in **closed position**

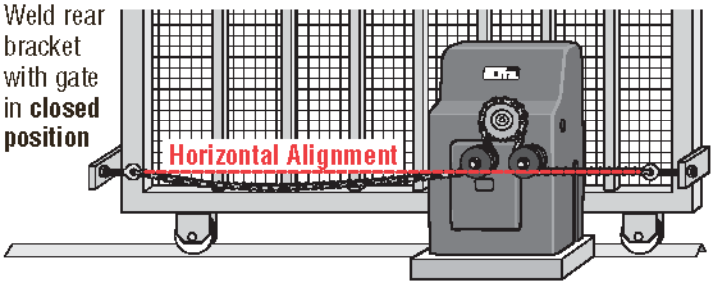

Weld front bracket with gate in **open position**.

⚠WARNING

To reduce the risk of SERIOUS INJURY or DEATH, make sure exposed idler pulleys have safety covers on them.

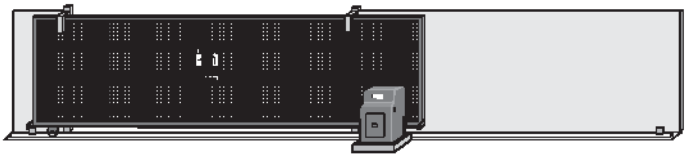

Rear Operator Position

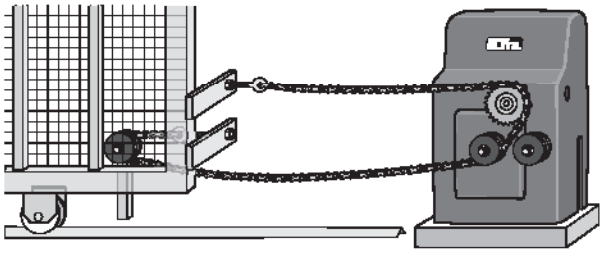

Cut the chain slot 17 1/2" high on cover.

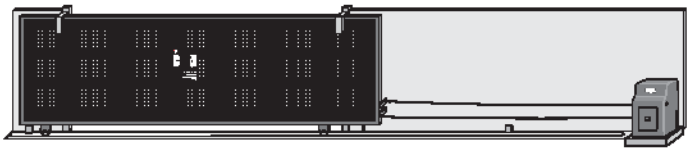

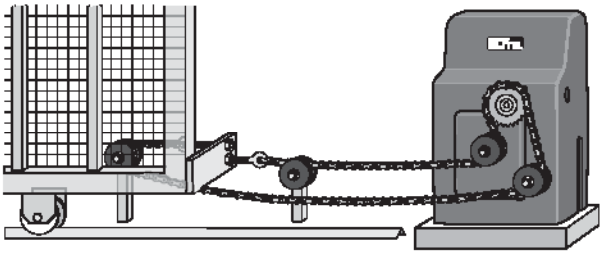

Low idler pulley position.

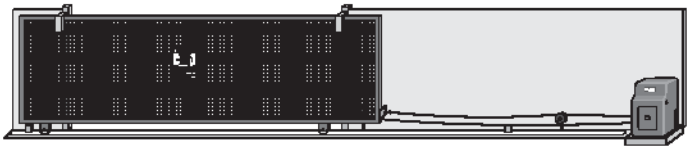

CHAIN DISTANCE AND HEIGHT ON GATE

CORRECT INSTALLATION

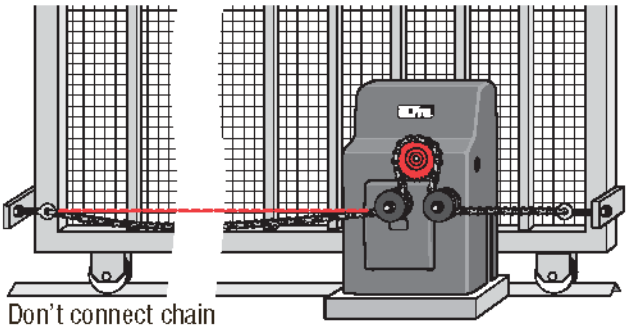

Don't connect chain **too tight** to gate.

INCORRECT INSTALLATION

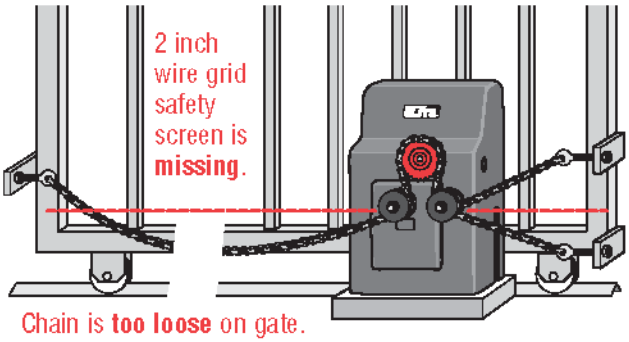

Chain is **too loose** on gate.

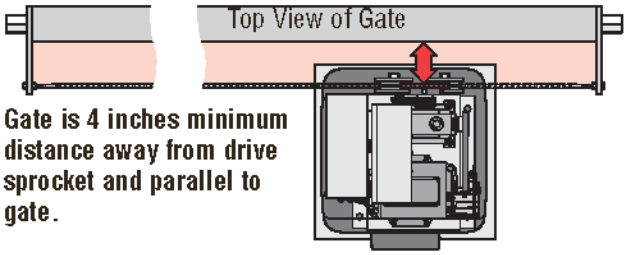

Gate is 4 inches minimum distance away from drive sprocket and parallel to gate.

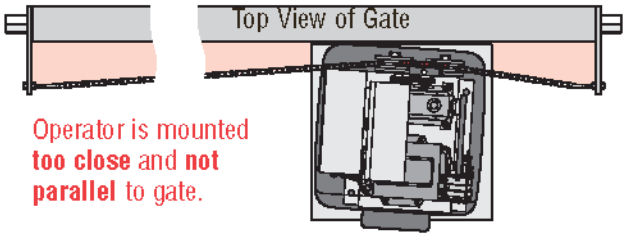

Operator is mounted **too close** and **not parallel** to gate.

Over time, the gate's chain will stretch out and need to have links removed from it. The links can be removed during normal periodic maintenance of the operator.

CONTROL BOARD DESCRIPTION

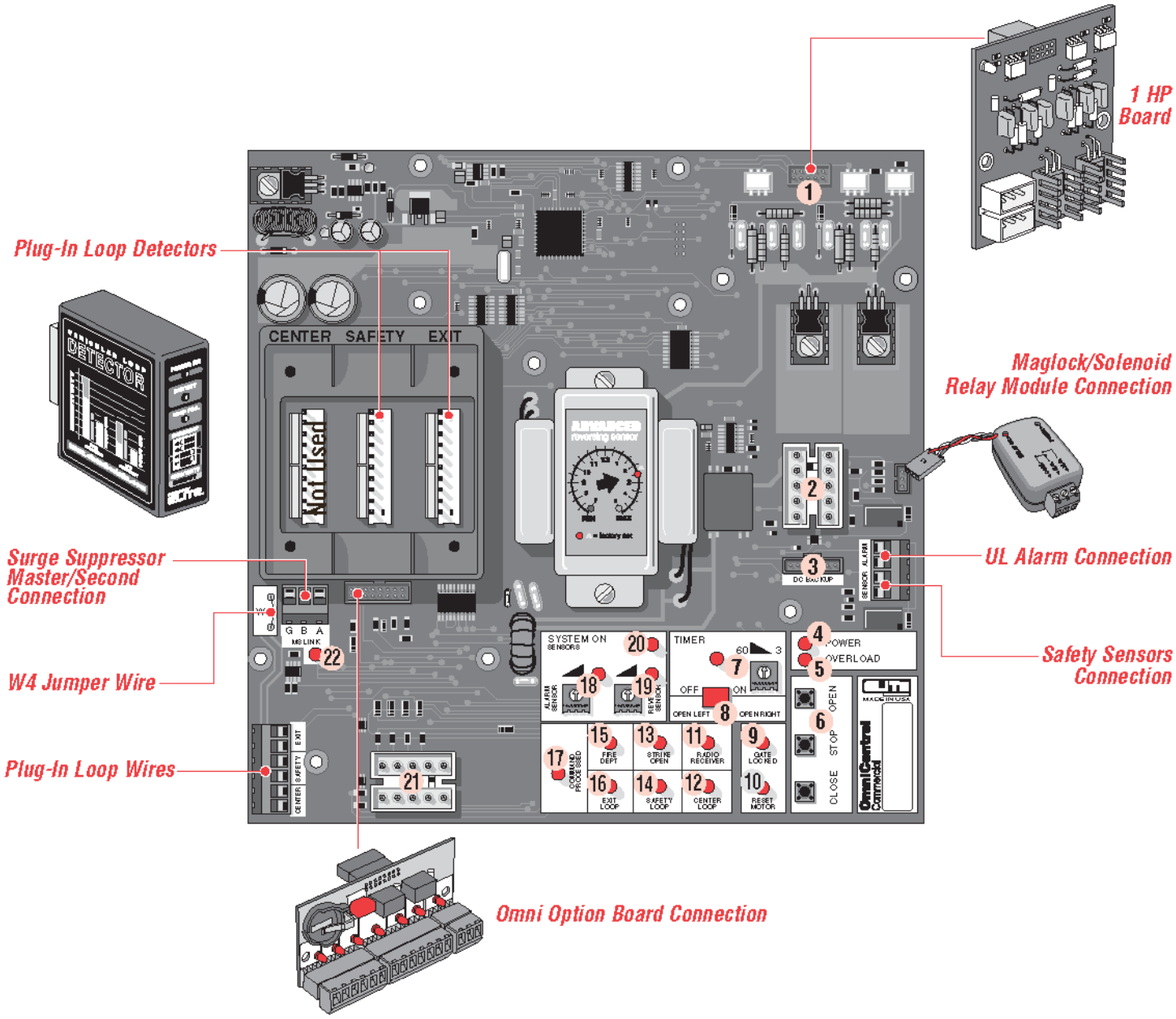

1. **1HP Connection** - Factory installed SL3000UL1HP™ Models.
2. **J3 Motor, Limit Switch, Maglock/Solenoid Connection**
3. **DC2000™ Back-Up Power or Reset Switch/Interlock Connection**
4. **Circuit Board Power LED** - Operator power OK when ON.
5. **Overload LED** - Operator power has overloaded when ON.
6. **On-Board 3 Button Station** - Close, Stop, Open commands.
7. **Timer** - Timed close, see page 28.
8. **Gate Opening Direction Selector** - Open Left, Open Right.
9. **Gate Locked LED** - Maglock/Solenoid is activated when on.
10. **Reset Motor LED** - Cycle operator power when ON.
11. **Radio Receiver LED**- Radio transmitter is activated when ON.
12. **Center Loop LED** - Center loop detector activated when ON.
13. **Strike Open LED** - Strike connected device activated when ON.
14. **Safety Loop LED** - Safety loop detector activated when ON.
15. **Fire Dept LED** - Key Switch activated when ON.
16. **Exit Loop LED** - Exit loop detector activated when ON.
17. **Command Processed LED** - Successful command executed.
18. **Alarm Sensor** - Limited Adjustment, page 29.
19. **Reverse Sensor** - Gate hit obstruction when ON. See page 29.
20. **System On LED** - Operator is successfully performing a command.
21. **J1 Surge Suppressor Data Connection**
22. **M/S Link LED** - Data being transferred between master and second operators when ON.

SURGE SUPPRESSOR TERMINAL CONNECTIONS

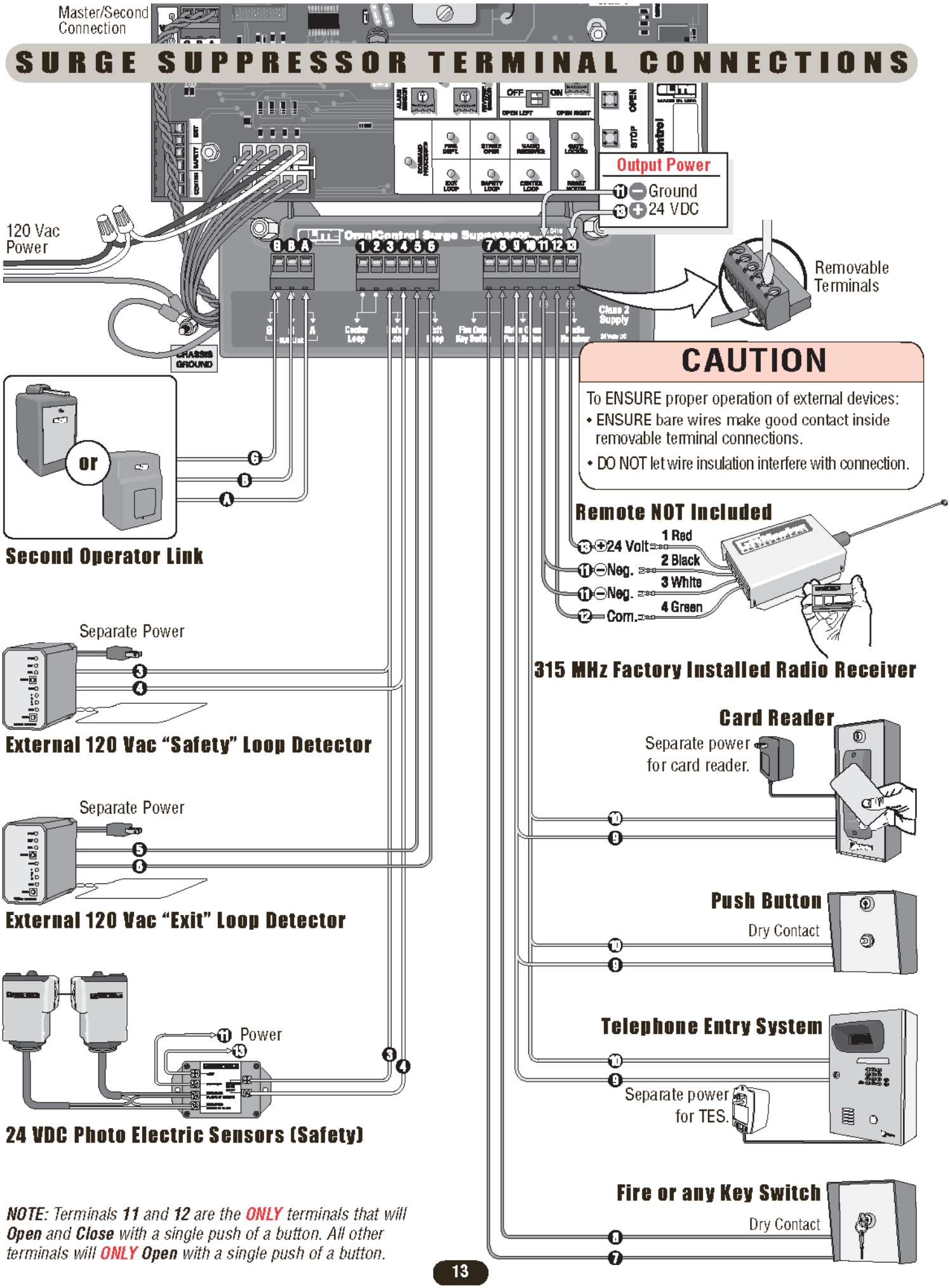

*NOTE: Terminals **11** and **12** are the **ONLY** terminals that will **Open** and **Close** with a single push of a button. All other terminals will **ONLY** **Open** with a single push of a button.*

Wiring

⚠WARNING

To reduce the risk of SEVERE INJURY or DEATH:

- ANY maintenance to the operator or in the area near the operator MUST not be performed until disconnecting the electrical power and locking-out the power. Upon completion of maintenance the area MUST be cleared and secured, at that time the unit may be returned to service.
- Disconnect power at the fuse box BEFORE proceeding. Operator MUST be properly grounded and connected in accordance with local electrical codes.
  NOTE: *The operator should be on a separate fused line of adequate capacity.*
- ALL electrical connections MUST be made by a qualified individual.
- DO NOT install any wiring or attempt to run the operator without consulting the wiring diagram. We recommend that you Install an optional reversing edge BEFORE proceeding with the control station installation.
- ALL power wiring should be on a dedicated circuit and well protected. The location of the power disconnect should be visible and clearly labeled.
- ALL power and control wiring MUST be run in separate conduit.
- BEFORE installing power wiring or control stations be sure to follow all specifications and warnings described below. Failure to do so may result in SEVERE INJURY to persons and/or damage to operator.

All power wiring should be on a dedicated circuit and well protected.

NOTE: *Calculated using NEC guidelines. Local codes and conditions must be reviewed for suitability of wire installation.*

120 Vac Power Wire	16 Gauge	14 Gauge	12 Gauge	10 Gauge	8 Gauge	4 Gauge
1/2 HP and Dual Motor	up to 150 FT	250 FT	400 FT	650 FT	1000 FT	2200 FT
1 HP	up to 75 FT	125 FT	200 FT	325 FT	500 FT	1100 FT

⚠WARNING

To prevent SERIOUS INJURY or DEATH from a moving gate:
DO NOT disconnect the built-in audio alarm or reset switch.

EARTH GROUND ROD INSTALLATION

CAUTION

To AVOID damaging gas, power, or other underground utility lines, contact underground utility locating companies BEFORE digging.

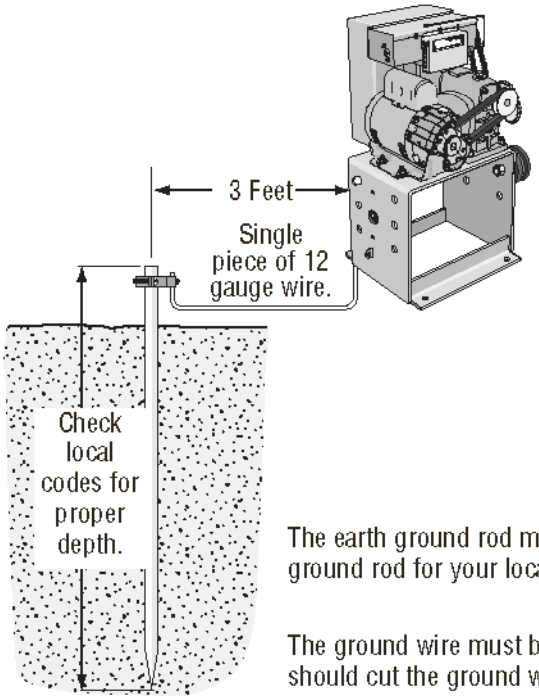

Proper grounding gives an electrical charge, such as from an electrical static discharge or a near lightning strike, a path from which to dissipate its energy safely into the earth.

Without this path, the intense energy generated by lightning could be directed towards the gate operator. Although nothing can absorb the tremendous power of a direct lightning strike, proper grounding can protect the gate operator in most cases.

The earth ground rod must be located within 3 feet from the gate operator. Use the proper type earth ground rod for your local area.

The ground wire must be a single, whole piece of wire. Never splice two wires for the ground wire. If you should cut the ground wire too short, break it, or destroy its integrity, replace it with a single wire length.

120 Vac POWER CONNECTION

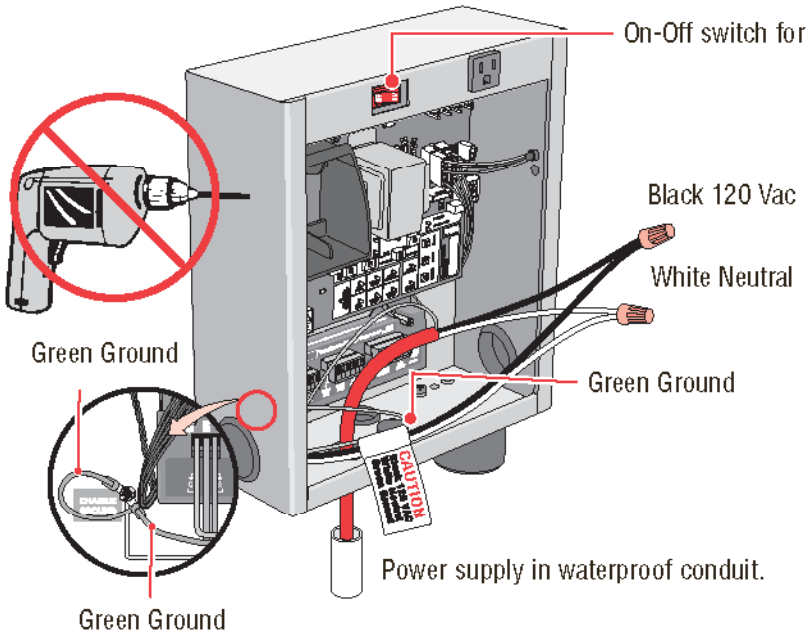

Use a 20 amp dedicated circuit for each operator.
Input power 120 Vac, 60 Hz.

Earth Ground Rod Highly Recommended!

See previous page.

120 Vac Power Wire	16 Gauge	14 Gauge	12 Gauge	10 Gauge	8 Gauge	4 Gauge
1/2 HP and Dual Motor	up to 150 FT	250 FT	400 FT	650 FT	1000 FT	2200 FT
1 HP	up to 75 FT	125 FT	200 FT	325 FT	500 FT	1100 FT

HEATER POWER CONNECTION

Connect the black, white and ground wire from the heater to the 120 Vac power supply as shown. When the heater switch is left in the "**ON**" position, the heater will turn on and off automatically when needed.

CAUTION

To reduce the risk of SERIOUS INJURY:
Do not touch the heater when switch is on, heater may be hot.

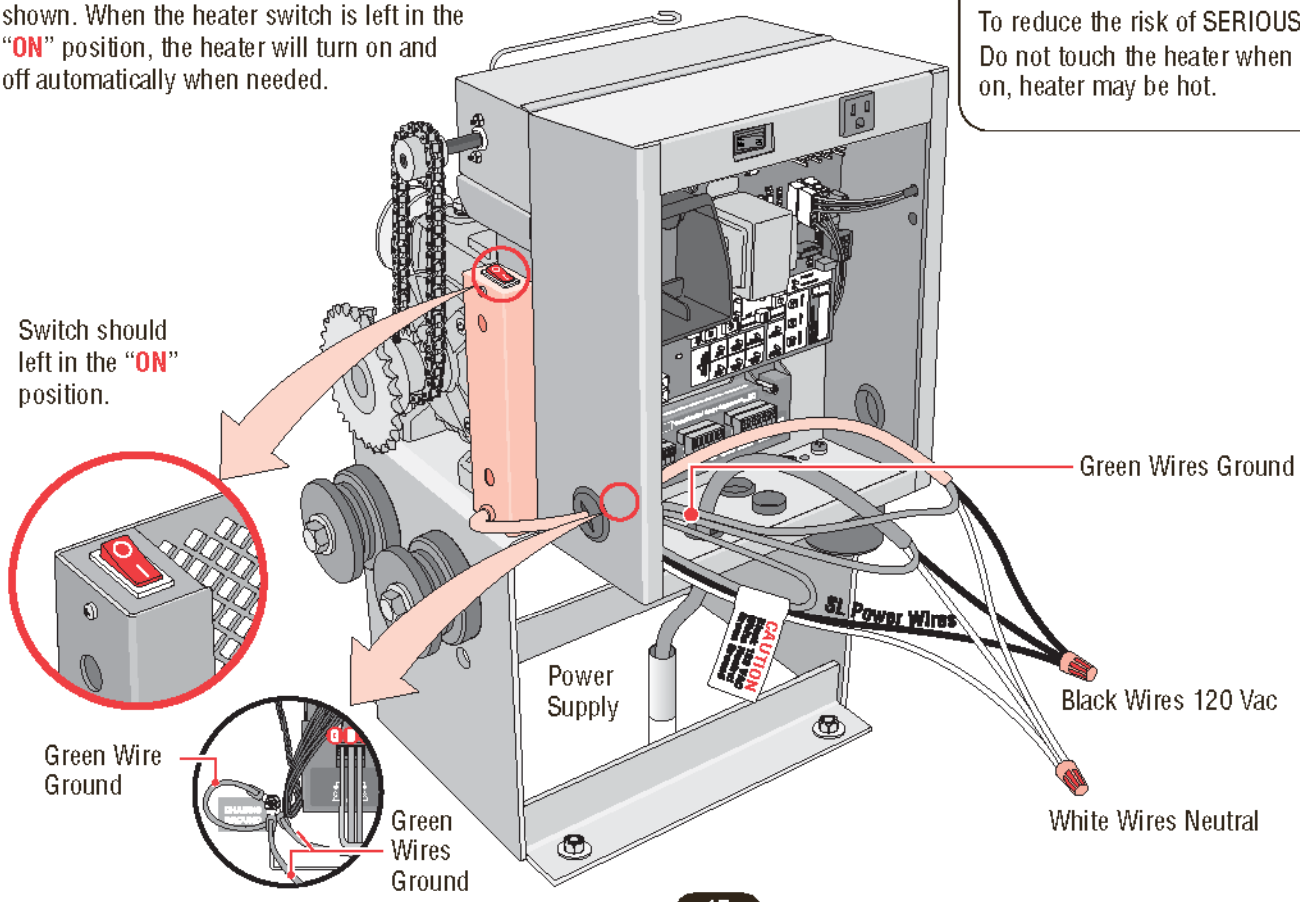

LINKING MASTER / SECOND OPERATORS

Use a 20 amp dedicated power circuit for each operator.

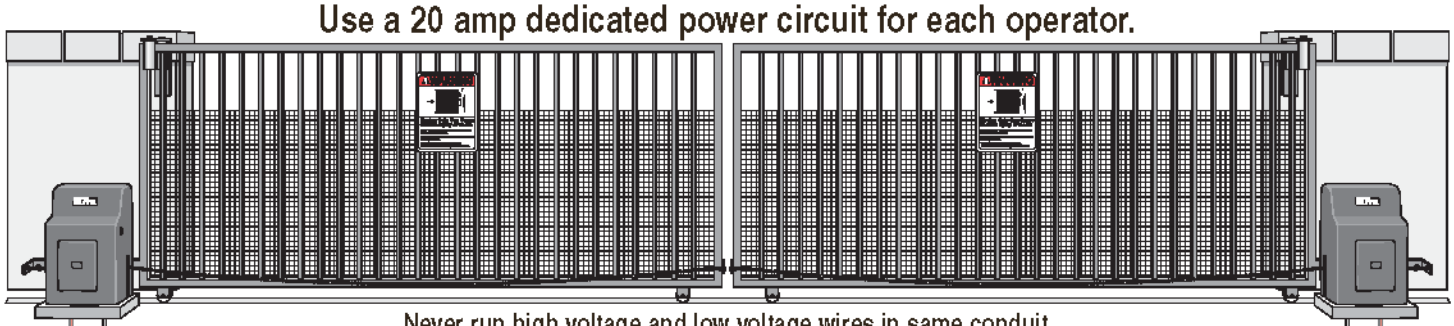

Never run high voltage and low voltage wires in same conduit.

Run low voltage 16-18 gauge wire in UL approved conduit to link operators together.

Master Board

Master/Second control boards are interchangeable.

Second Board

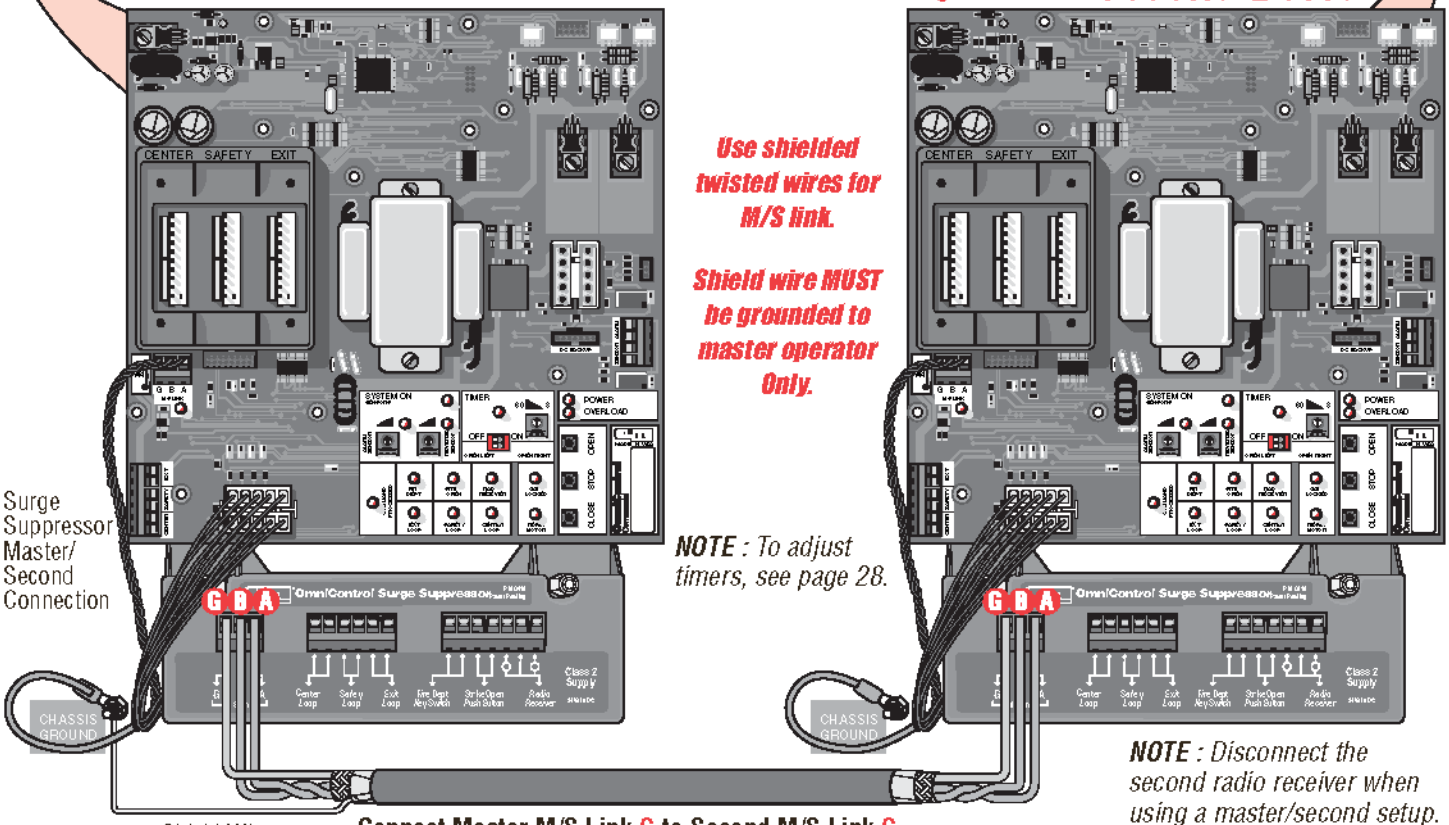

Use shielded twisted wires for M/S link.

Shield wire MUST be grounded to master operator Only.

Surge Suppressor Master/ Second Connection

***NOTE** : To adjust timers, see page 28.*

***NOTE** : Disconnect the second radio receiver when using a master/second setup.*

Shield Wire

Connect Master M/S Link G to Second M/S Link G.
Connect Master M/S Link B to Second M/S Link B.
Connect Master M/S Link A to Second M/S Link A.

Partial Master/Individual Control

In order for the following operation to occur, follow the instructions.

Example: There is a double gate, the entry gate is to be opened with a radio transmitter and the exit gate with a free exit loop. Only one safety loop system is to open both gates, and a fire department switch should open both gates at the same time.

1. Connect the radio receiver to entry gate only.
2. Connect the exit loop to exit gate only.
3. Connect the safety loop to both entry and exit gates. Plug-in loop detectors not applicable (Observe polarity of voltage).
4. Connect the fire department switch to both entry and exit gates (Observe polarity of both operators).

SOLENOID/MAGLOCK RELAY CONNECTION

Connection of a solenoid or magnetic lock can be made using the J7 board connector and "Optional" Relay Adapter Module.
See Accessories.

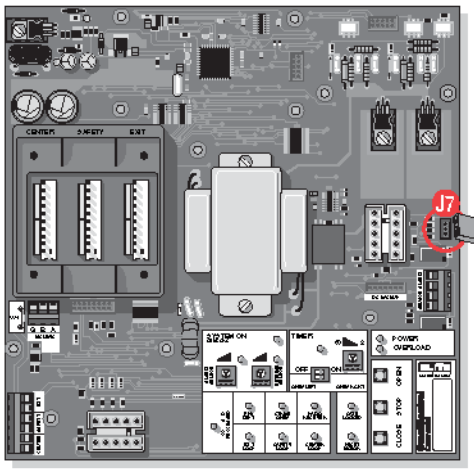

Relay Contact Rating
2 Amp - 125 AC/DC
2 Amp switching load capability

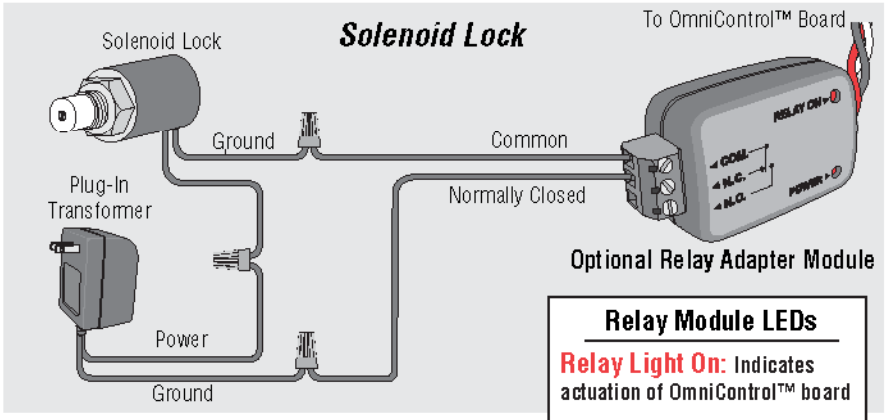

Relay Module LEDs

Relay Light On: Indicates actuation of OmniControl™ board

Power Light On: Indicates power is being received

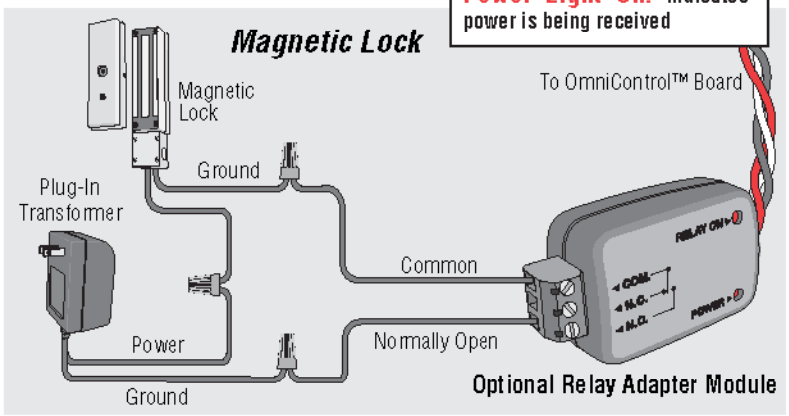

FACTORY INSTALLED DC2000™ CONNECTION

Reset button and interlock wires, Do Not Remove.

DC2000™ Startup

1. Plug in the 12 pin plug into the DC2000™ control unit. Make sure the "**System ON**" and "**Charge OK**" LEDs are lit. If the "**Battery Low**" led comes on, the battery needs to charge before it can be used.

2. Make sure "**Gate Direction**" setting on DC2000™ is set the same as the OmniControl™ board setting. See Adjustments.

3. Adjust **"Reverse Sensor"** setting. See Adjustment Reversing Sensor(s).

4 System Setup

"Manual" setting: The DC2000™ will respond to the input devices wired to the J 20 socket.
This mode can also be used as an emergency override. If 120 Vac power is on, but the system has an electronic malfunction, the gate can be operated using the DC2000™ system with input devices wired to J 20 socket.

"Auto" setting: The DC2000™ opens the gate automatically upon 120 Vac power failure and stays open. When 120 Vac power is restored, the gate operator will return to normal operation. (The gate can be closed by manual command)

	120 Vac Power Failure	120 Vac Power On, OmniControl™ Board Malfunction	120 Vac Power On, Emergency Override
Manual Mode	Push and Hold to operate gate.	Turn the 120 Vac power off then push and Hold to operate gate.	Push and Hold to override the OmniControl™ board.
Auto Mode	Gate automatically opens.	Turn the 120 Vac power off then gate opens automatically.	Push and Hold to override the OmniControl™ board.

NOTE: *All devices wired to the DC2000™ MUST be* ***dedicated*** *to it alone. Normal operation will be controlled by* ***separate*** *devices wired to the OmniControl™ board and surge suppressor.*

Typical Auto Mode Example: If the DC2000 is "automatically opening" the gate due to a power failure (auto mode), any manual command such as "**One-Button**", "**Three Push Button**", "**Key Switch**", "**Photo Beam**" or "**Edge Sensor**" will cancel the automatic mode of the DC2000™. After such cancellation, the DC2000™ will continue to operate in "manual mode" until 120 Vac power is restored.

DC2000™ 12 VDC Radio Receiver (Not Provided)

The DC2000™ needs a separate 12 VDC radio receiver to give remote commands to the operator during a power failure.

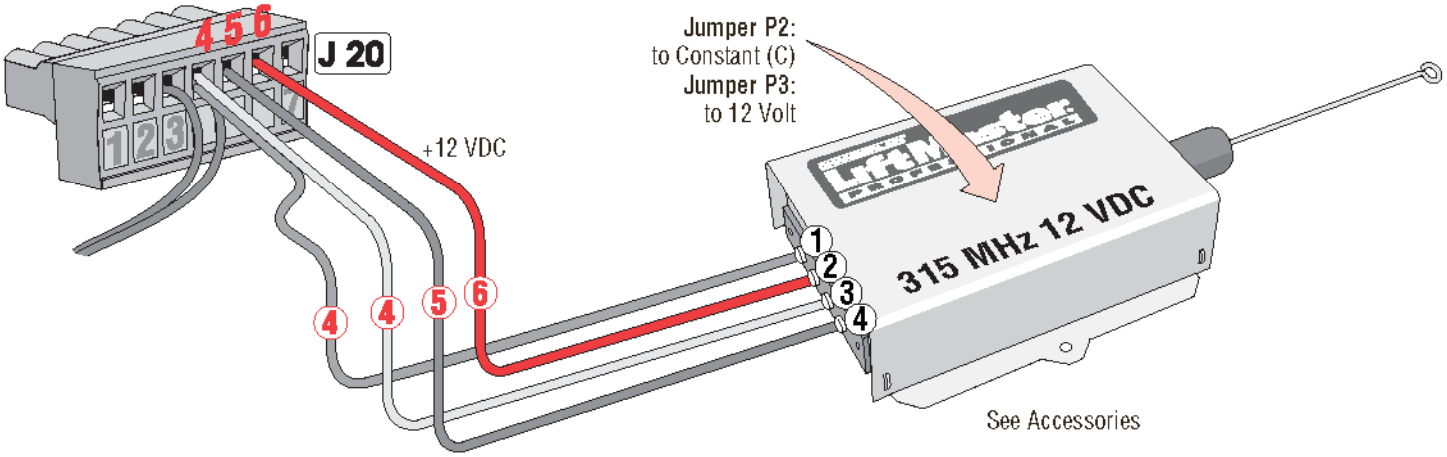

See Accessories

Manually Operated DC2000™ Devices

Manual external devices should be dry-contact which do not consume any current like push buttons or a key switch.

Key switch is for property owner's emergency access ONLY. **DO NOT FOR USE FOR A EMERGENCY FIRE/POLICE KEY ACCESS.**
Contact your local Fire/Police municipalities for more information on correct Fire/Police emergency key access.

Manual One-Button

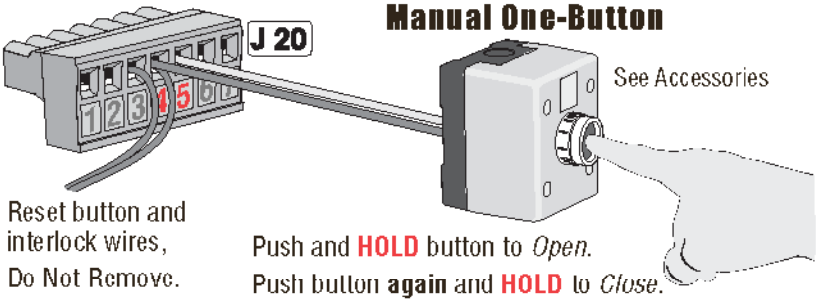

Manual Key Switch

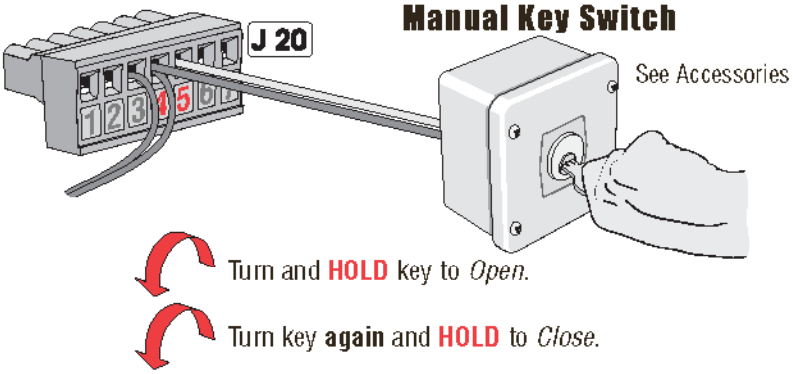

Manual 3-Button

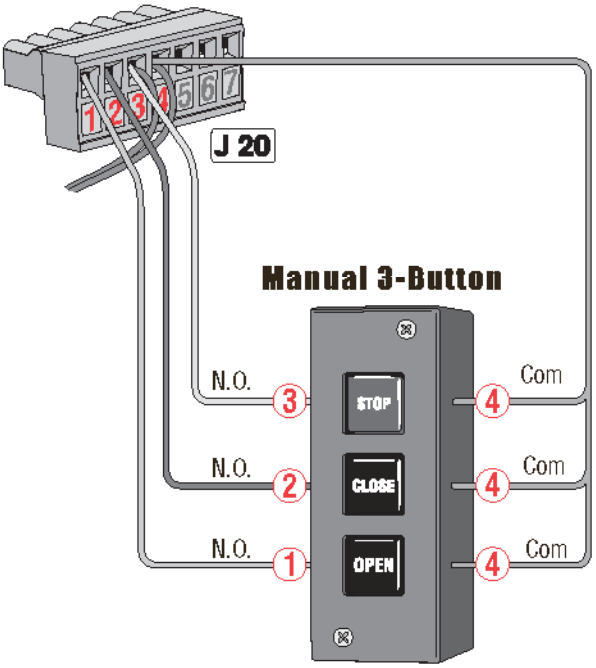

Push and HOLD a button to operate.

DC2000™ Safety Devices

It is recommended using separate safety devices to maintain gate safety when the DC2000™ is needed for any reason. The safety devices connected to the OmniControl™ board and surge suppressor ***WILL NOT*** protect the gate when there is a AC power failure and the DC2000™ is used.

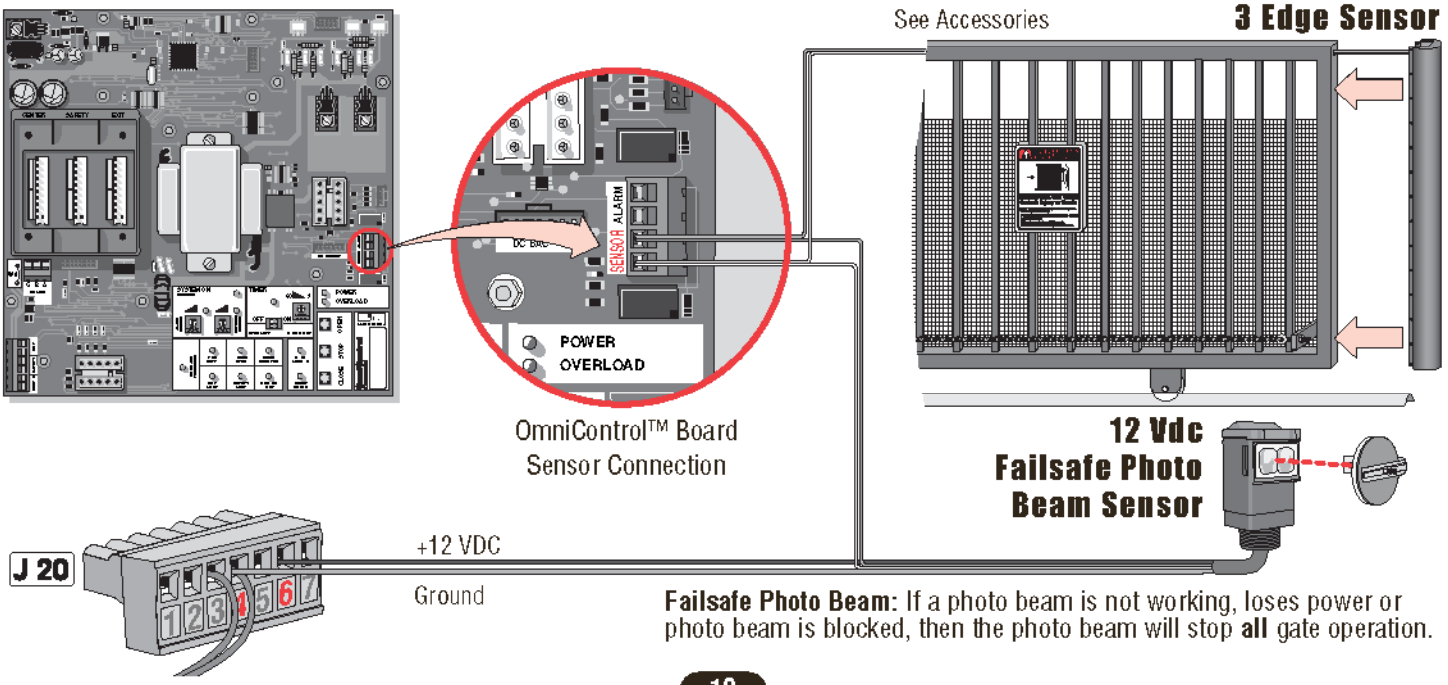

Failsafe Photo Beam: If a photo beam is not working, loses power or photo beam is blocked, then the photo beam will stop **all** gate operation.

PLUG-IN LOOP DETECTOR WIRING

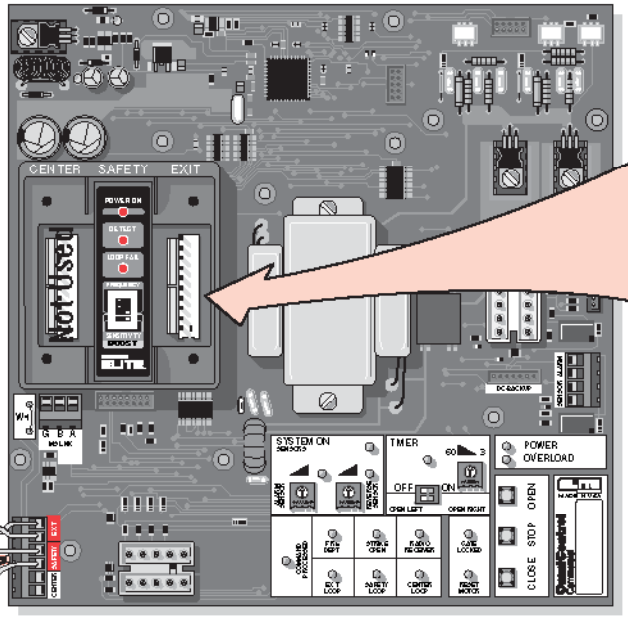

Plug-In Loop Detectors
See Accessories

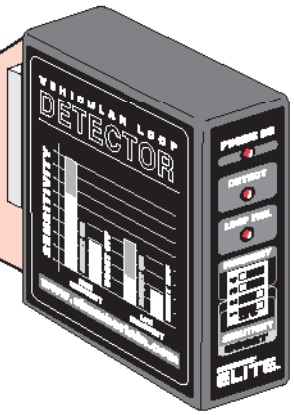

The wire MUST be twisted together ***minimum 6 twists per foot*** from the end of the loop to the control board.

Series Connected

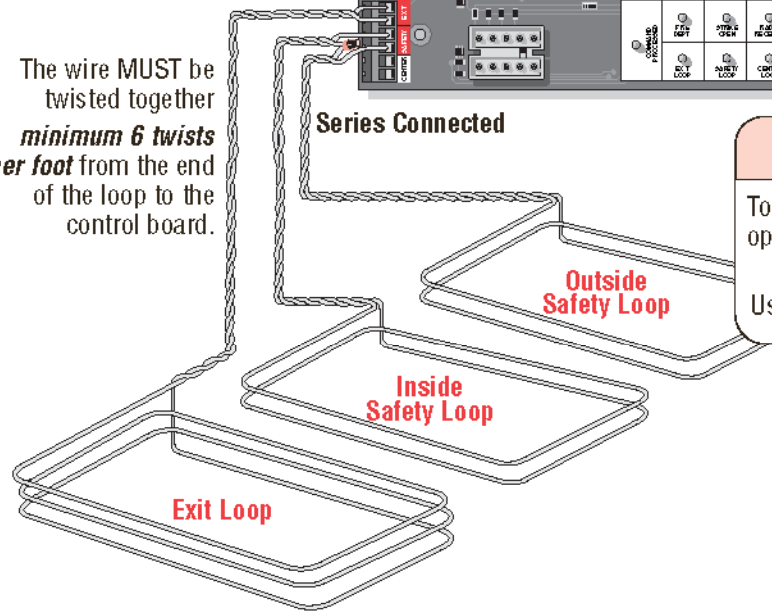

CAUTION

To AVOID damaging control board, disconnect all power to operator before installing plug-in loop detectors.

Use a different frequency for every loop detector installed.

Plug-In "Safety" Loop Detector - Allows gate to stay open when vehicles are obstructing path. Caution: Suggested for vehicles 14 feet or longer.

If the "**Inside**" and "**outside**" safety loops are connected to the same loop detector:

- They should be series connected to the detector.
- Have the same dimensions.
- Have the same number of wire turns.

Example of a inside and outside 2 wire turn loop connected in series. (See "Installing Insulated Loop Wire" on next page for more information)

NOTE: *Refer to the plug-in loop detector manual for more specific information.*

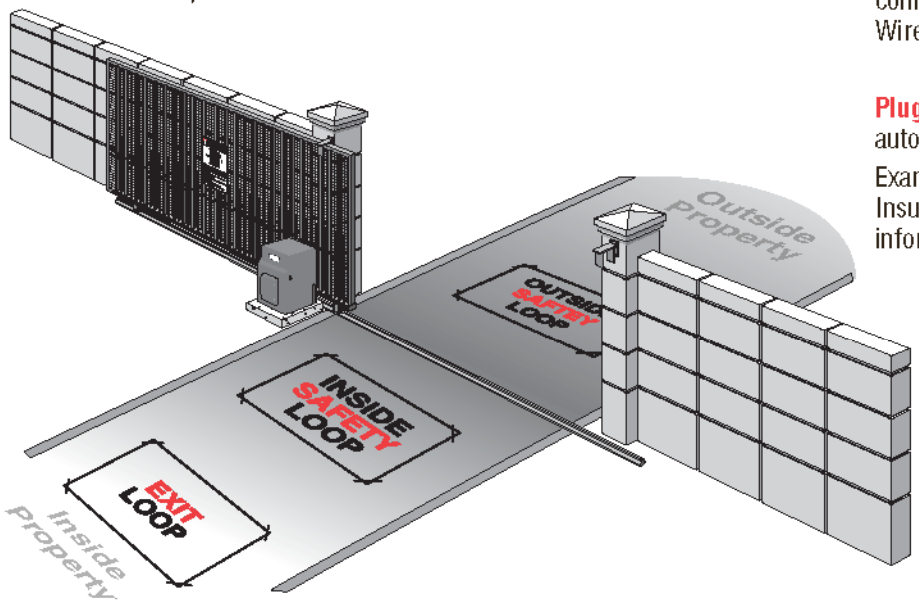

Plug-In "Exit" Loop Detector - Allows gate to automatically open for exiting vehicles.

Example of a 3 wire turn loop. (See "Installing Insulated Loop Wire" on next page for more information)

Contact your local dealer for information about plug-in loop detectors.

120 Vac EXTERNAL LOOP DETECTOR WIRING

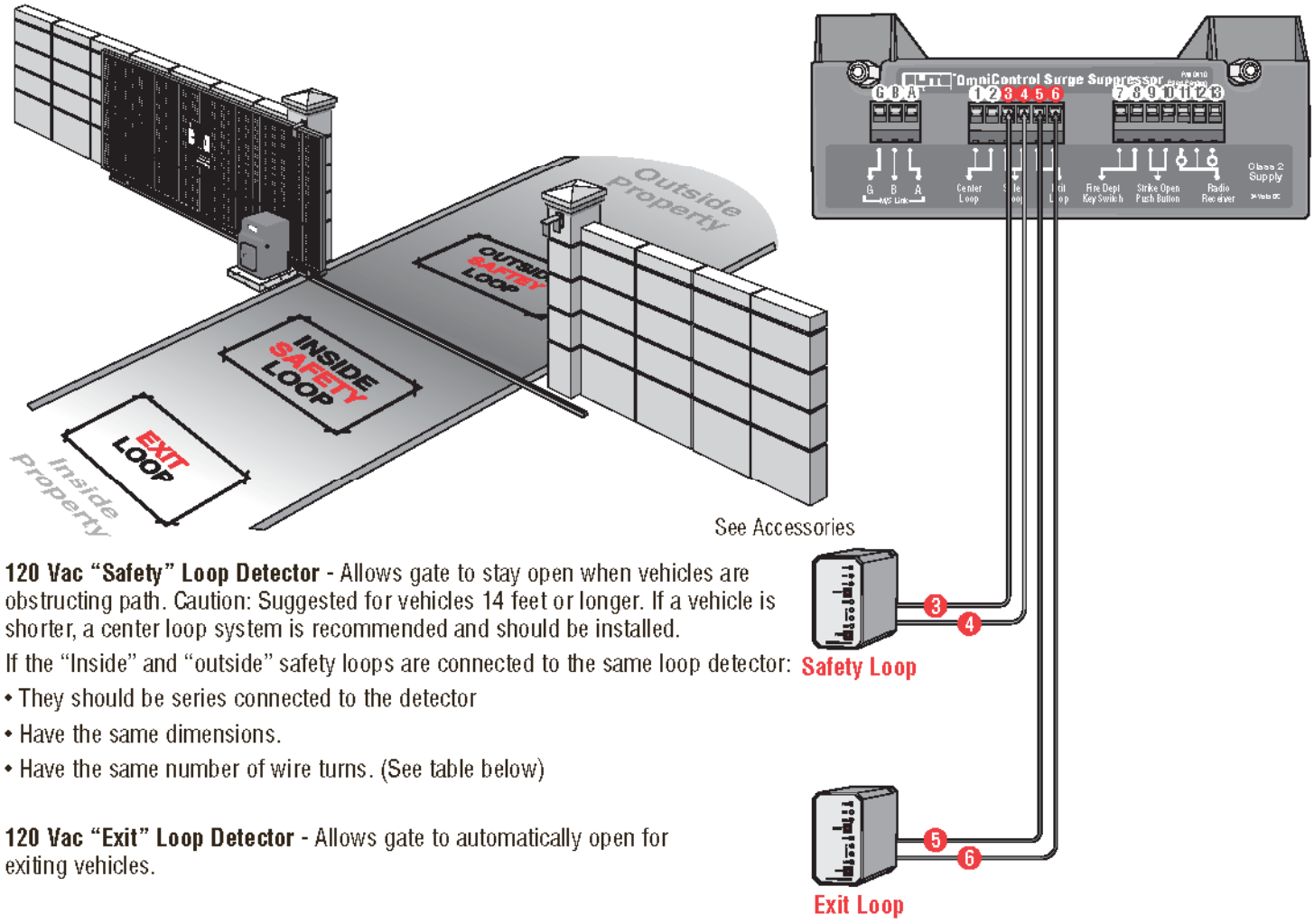

See Accessories

120 Vac "Safety" Loop Detector - Allows gate to stay open when vehicles are obstructing path. Caution: Suggested for vehicles 14 feet or longer. If a vehicle is shorter, a center loop system is recommended and should be installed.

If the "Inside" and "outside" safety loops are connected to the same loop detector:

- They should be series connected to the detector
- Have the same dimensions.
- Have the same number of wire turns. (See table below)

120 Vac "Exit" Loop Detector - Allows gate to automatically open for exiting vehicles.

Installing Insulated Loop Wire

Number of Wire Turns Needed for Loop Sizes

Loop Perimeter	Number of Wire Turns
10 feet to 13 feet	4
14 feet to 26 feet	3
27 feet to 80 feet	2
80 feet and up	1

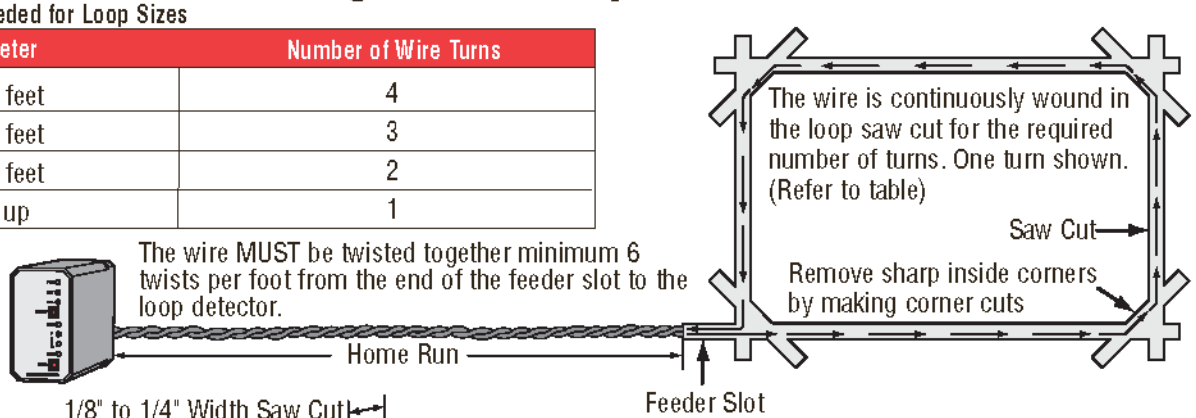

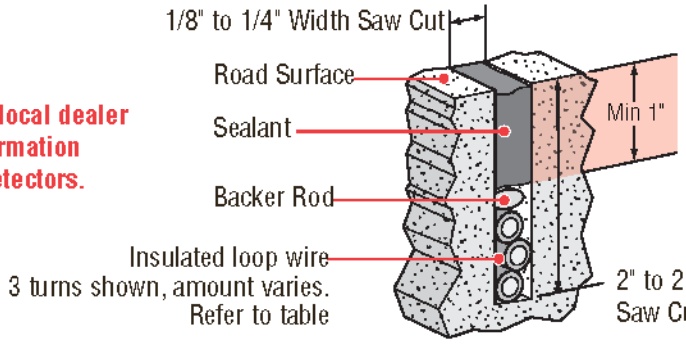

Contact your local dealer for more information about loop detectors.

Recommended Loop Wire XLPE 12-18 gauge
(Use heavier wire gauge for a more durable loop).

NOTE: *Wire mesh or reinforcement embedded in the road surface should be cut away a minimum of 6 inches from the perimeter of the loop.*

Contact Sensors (Edge Sensor)

⚠WARNING

To prevent SERIOUS INJURY or DEATH from a moving gate:

- Locate entrapment protection devices to protect in BOTH the open and close gate cycles.
- Locate entrapment protection devices to protect between moving gate and RIGID objects, such as posts or walls.

NOTE: *When touched, these electrically activated edge sensors immediately signal the gate operator to stop and reverse. Property owners are obligated to test edges monthly. See Accessories.*

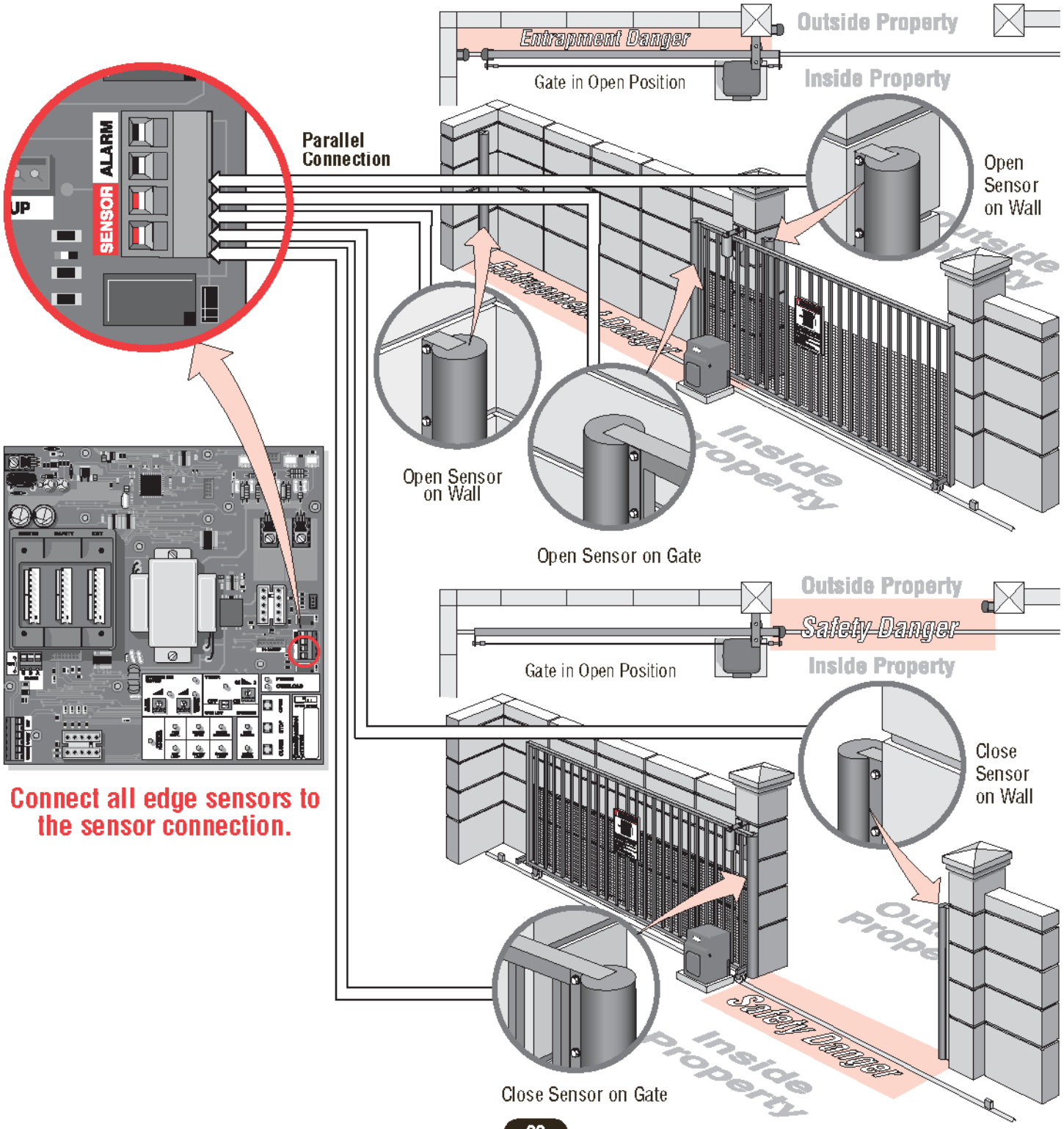

Connect all edge sensors to the sensor connection.

ENTRAPMENT PROTECTION DEVICES

Non-Contact Sensors (24 VDC Photo Electric Sensors)

NOTE: *Property owners are obligated to test photo sensors monthly.*

Entrapment Non-Contact Sensor

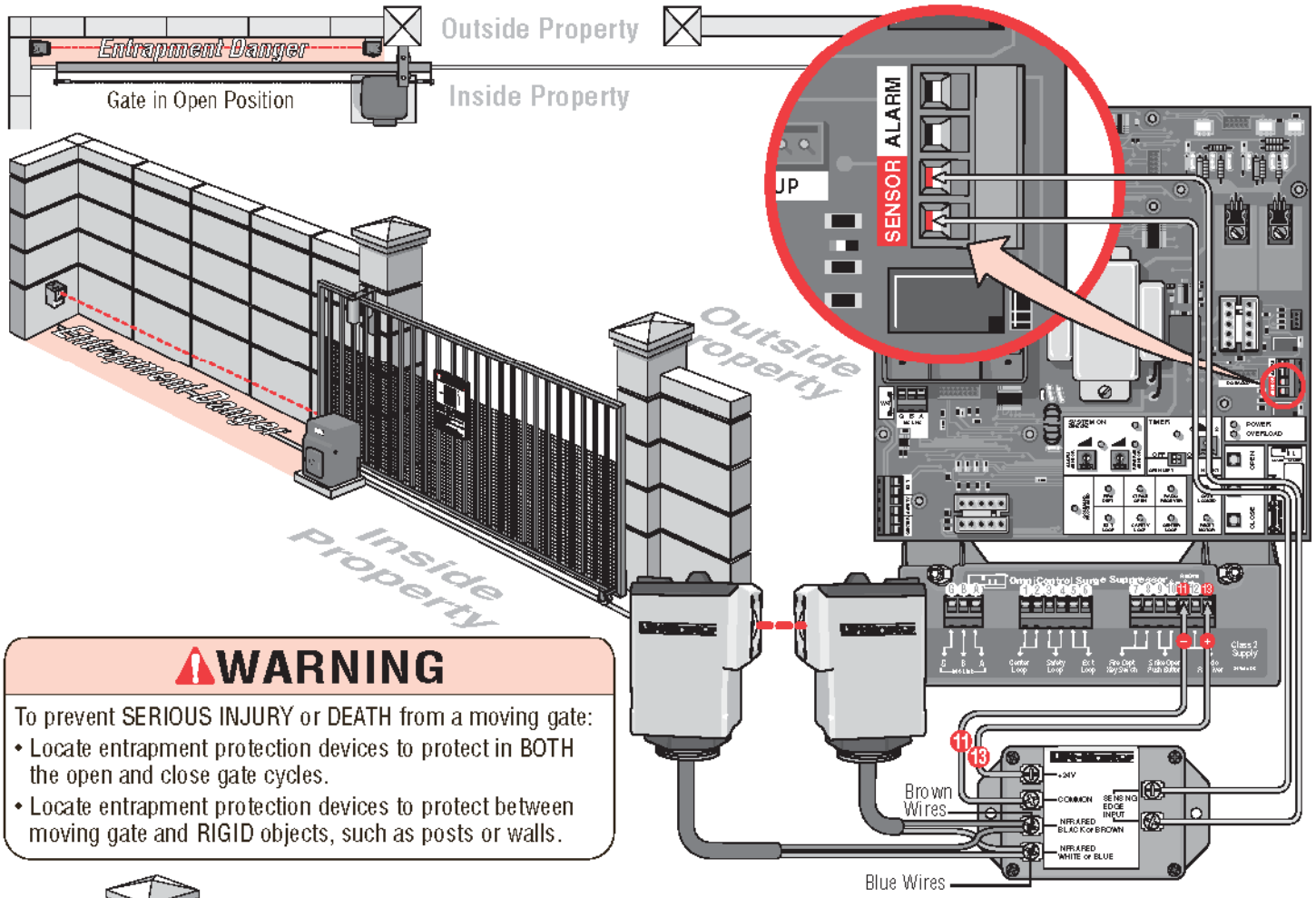

⚠WARNING

To prevent SERIOUS INJURY or DEATH from a moving gate:

- Locate entrapment protection devices to protect in BOTH the open and close gate cycles.
- Locate entrapment protection devices to protect between moving gate and RIGID objects, such as posts or walls.

NOTE: *If the photo beam gets blocked while the gate is closing, it will stop and reopen. The gate will remain open until the obstruction is cleared.*

Safety Non-Contact Sensor

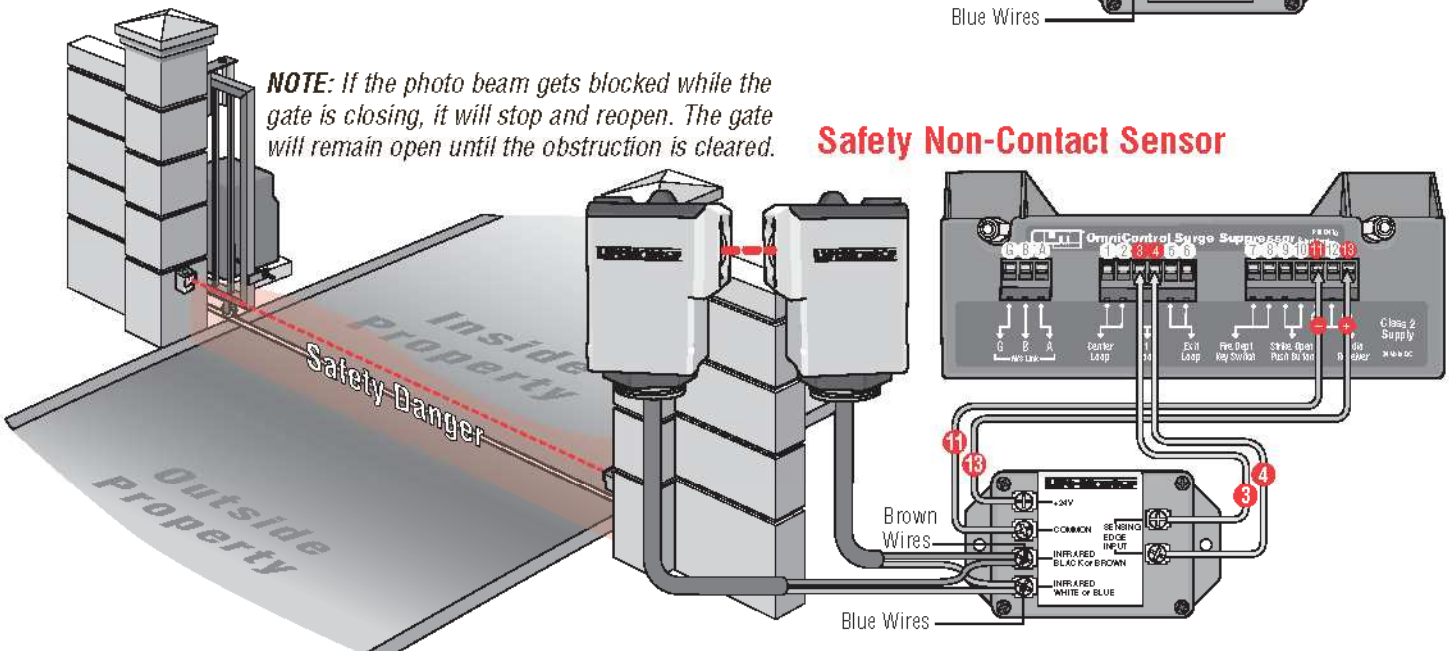

Contact your local dealer for more information about photo electric sensors.

It is best to use Failsafe Photo Electric Sensors for this Safety Option.
Failsafe Photo Sensors: If a failsafe photo sensor is not working or loses power or photo beam is blocked, then the photo beam will stop ALL gate operation.

OMNI OPTION BOARD CONNECTIONS

NOTE: *Refer to the Omni Option Board manual for more specific information.*

Purchased separately from Chamberlain Elite. See Accessories.

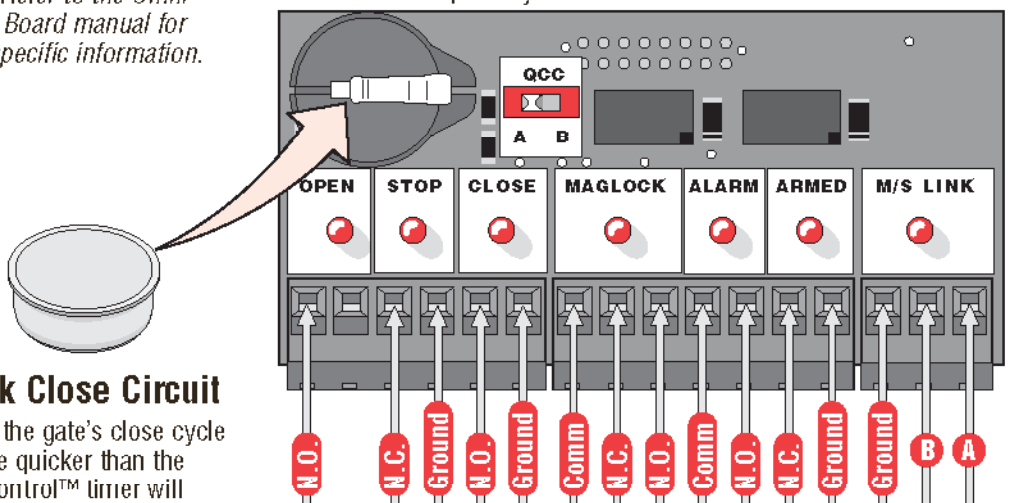

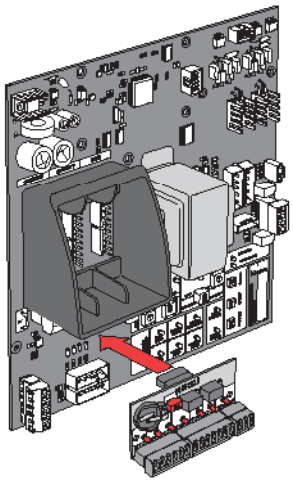

Quick Close Circuit

Allows the gate's close cycle to close quicker than the OmniControl™ timer will allow. Refer to the QCC manual for more specific information.

See Accessories.

N.O. N.C. Ground N.O. Ground Comm N.C. N.O. Comm N.O. N.C. Ground Ground B A

Second Operator

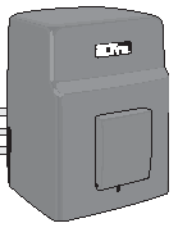

Proximity Switch

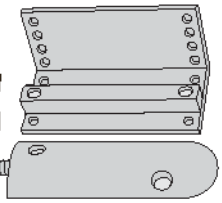

3 Button Station
Dry Contact

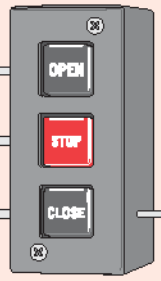

12 Vdc House Alarm

Stop Button
Dry Contact

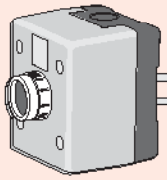

NOTE: *Cut jumper W4 wire for 3 button station or stop button.*

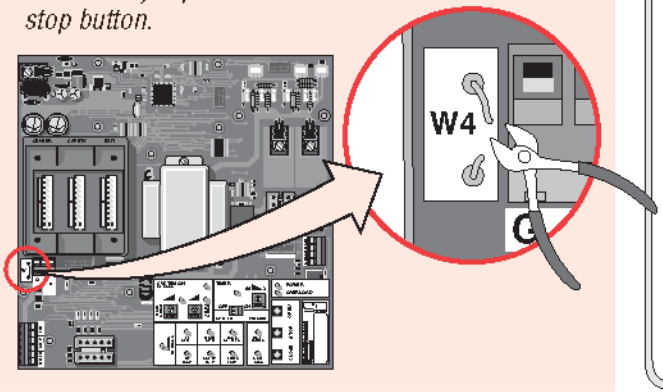

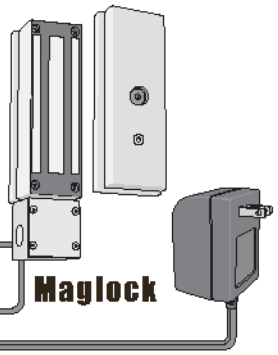

Maglock

Relay Contact Rating
0.5 Amp - 125 Vac
1 Amp - 24 VDC

Solenoid Lock

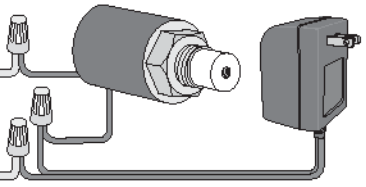

Adjustments

⚠WARNING

To reduce the risk of SERIOUS INJURY or DEATH: disconnect electric power BEFORE performing ANY adjustments.

SET GATE OPENING DIRECTION

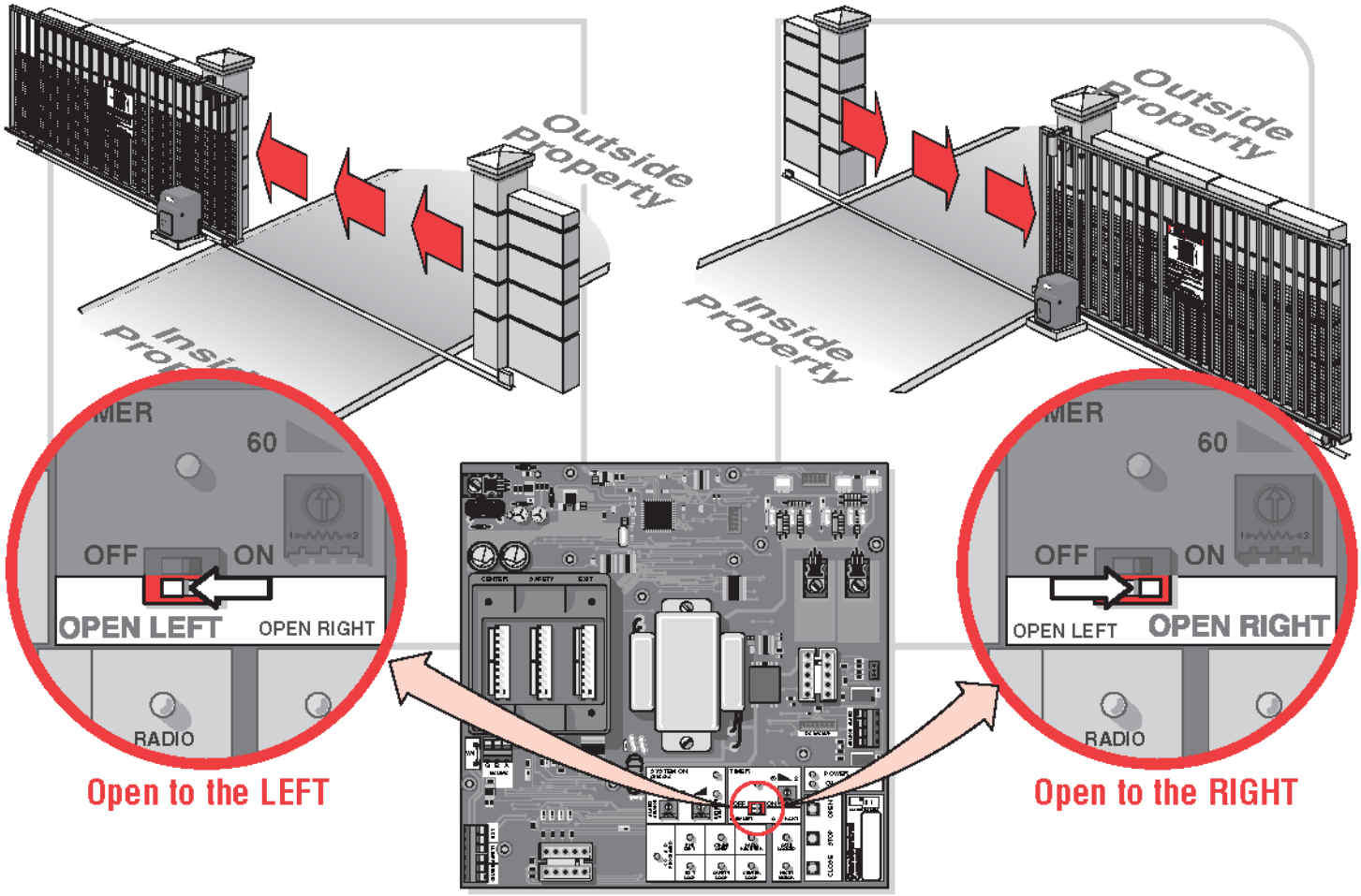

Open to the LEFT

Open to the RIGHT

LIMIT SWITCH ADJUSTMENTS

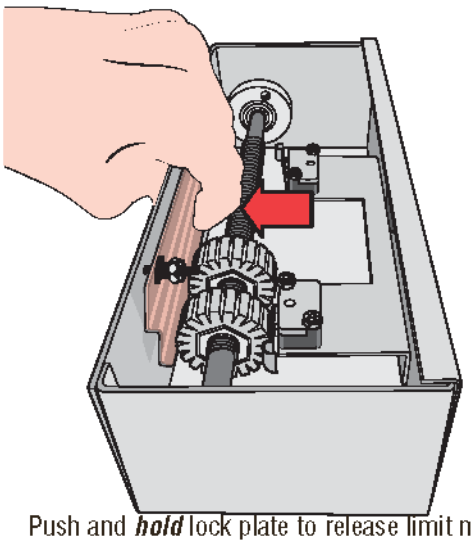

Push and ***hold*** lock plate to release limit nuts.

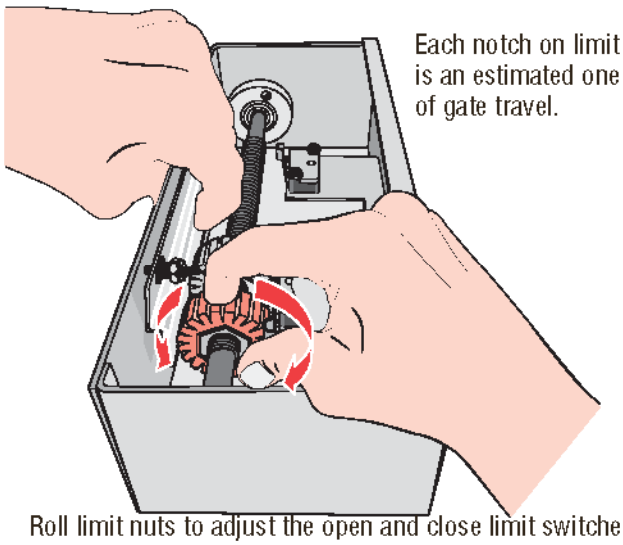

Each notch on limit nut is an estimated one inch of gate travel.

Roll limit nuts to adjust the open and close limit switches.

315 MHZ 24 VDC RADIO RECEIVER PROGRAMMING

Setting Security Mode (High) or (Normal):

The receiver is factory set at **HIGH** security mode. To verify, refer to the label next to jumper P4. (See illustration below)

The Receiver can be used with up to ***15*** *rolling code remotes or pins in* ***HIGH*** *security mode.* Alternately, it can be used with up to ***31*** *of any type remote in* ***NORMAL*** *security mode,* including any combination of rolling code, billion code, or dip switch remotes.

When changing from **NORMAL** to **HIGH** security mode, *all previous remote control codes must be erased.* See next page to erase and reprogram remote controls that are being used.

⚠⚠WARNING

To prevent possible SERIOUS INJURY or DEATH from a moving gate or garage door:

- ALWAYS keep remote controls out of reach of children. NEVER permit children to operate, or play with remote control transmitters.
- Activate gate or door ONLY when it can be seen clearly, is properly adjusted, and there are no obstructions to door travel.
- ALWAYS keep gate or garage door in sight until completely closed NEVER permit anyone to cross path of moving gate or door.

CAUTION

To AVOID damaging receiver, disconnect receiver's power BEFORE changing jumpers.

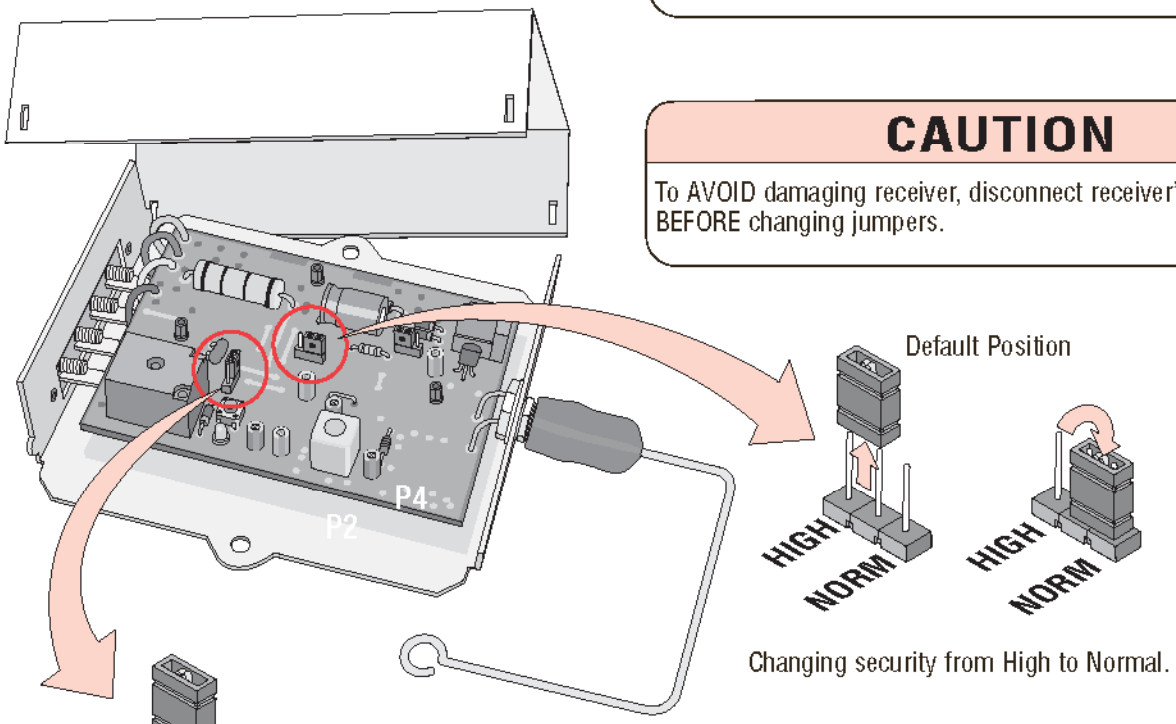

Changing security from High to Normal.

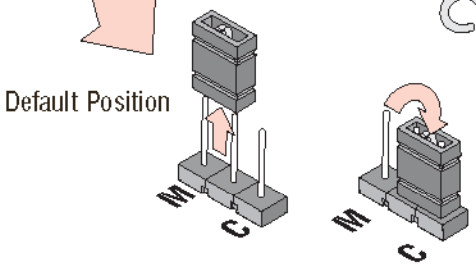

Changing output duration from Momentary to Constant.

Setting Output Duration (M) or (C):

The receiver is factory set at (**M**) Momentary. To verify, refer to the label next to jumper P2. (See illustration above)

For commercial applications, the receiver can be set to either (**C**) constant or (**M**) momentary closure.

With the jumper in the (**M**) momentary position, the *contacts will close for 1/4 second regardless of the length of remote control transmission.*

With the jumper in (**C**) constant position, the *contacts will stay closed as long as the remote control continues transmitting.* Push and **HOLD** remote button to open or close gate.

⚠WARNING

To reduce the risk of SERIOUS INJURY or DEATH, the use of CONSTANT OPERATION on residential operators is PROHIBITED.

315 MHZ 24 VDC RADIO RECEIVER PROGRAMMING

IMPORTANT: Hand Held Remote **NOT** Included.

NOTICE: To comply with FCC and or Industry Canada (IC) rules, adjustment or modifications of this receiver and/or transmitter are prohibited, except for changing the code setting or replacing the battery. THERE ARE NO OTHER USER SERVICEABLE PARTS.
Tested to Comply with FCC Standards FOR HOME OR OFFICE USE. Operation is subject to the following two conditions: (1) this device may not cause harmful interference, and (2) this device must accept any interference received, including interference that may cause undesired operation.

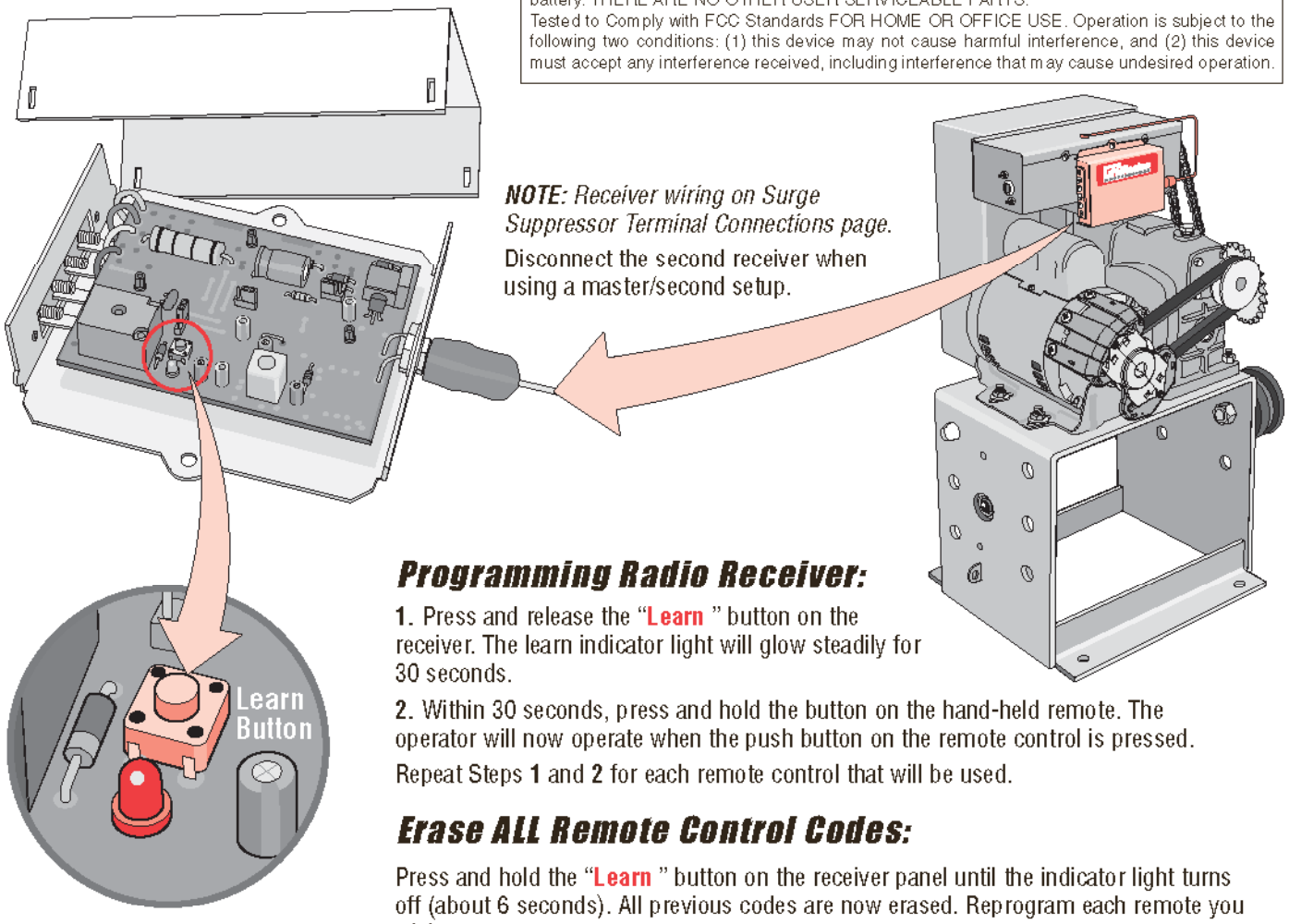

NOTE: *Receiver wiring on Surge Suppressor Terminal Connections page.*
Disconnect the second receiver when using a master/second setup.

Programming Radio Receiver:

1. Press and release the "**Learn** " button on the receiver. The learn indicator light will glow steadily for 30 seconds.

2. Within 30 seconds, press and hold the button on the hand-held remote. The operator will now operate when the push button on the remote control is pressed.

Repeat Steps **1** and **2** for each remote control that will be used.

Erase ALL Remote Control Codes:

Press and hold the "**Learn** " button on the receiver panel until the indicator light turns off (about 6 seconds). All previous codes are now erased. Reprogram each remote you wish to use.

Optional 315 MHz Hand Held Remotes - See Accessories

SETTING TIMER (ON, OFF)

Single Operator

To use the automatic close for the gate system the timer switch should be put in the "ON" position.

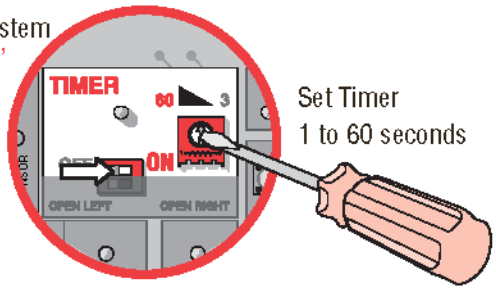

Set Timer
1 to 60 seconds

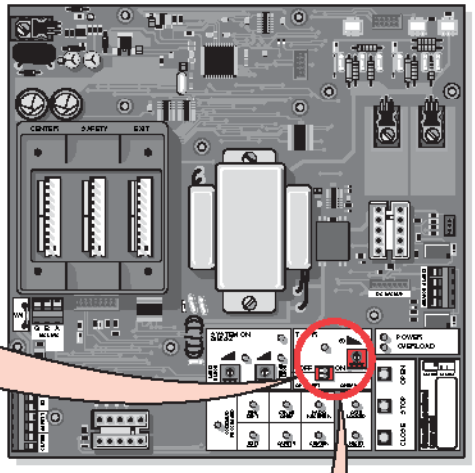

To use the push close command, the timer should be switched to the "OFF" position. Push button once to open gate, push button again to close gate.

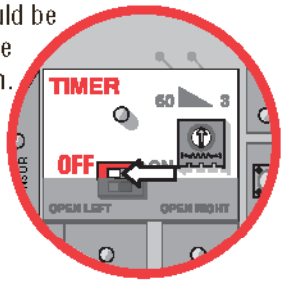

Master/Second Operators

Operators need to be connected by M/S LINK. See M/S Link.

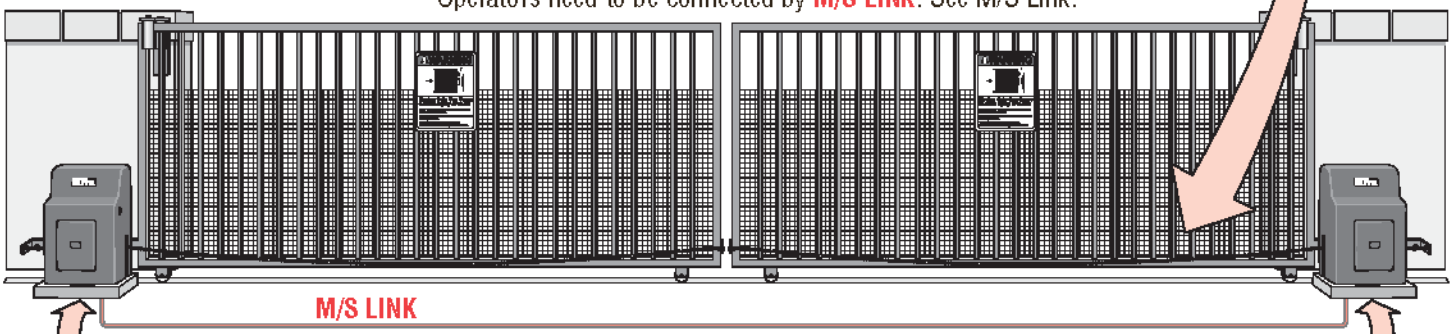

Master/Second control boards are interchangeable.

Master Board with Timers ON

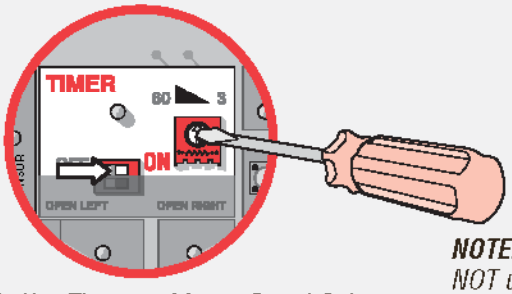

1. Turn Master Timer ON.
2. Turn Second Timer OFF.

3. Use Timer on Master Board Only. (1 to 60 seconds)

NOTE: *If a secondary safety sensor device is NOT used when the timer is* **ON**, *the gate WILL hit a vehicle obstructing the gate path before reversing during the close cycle.*

Second Board with Timers ON

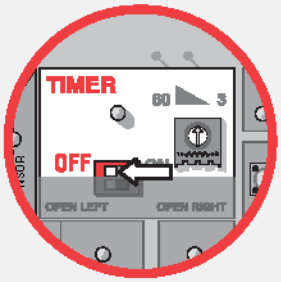

Master Board with Timers OFF

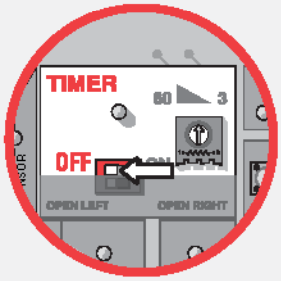

1. Turn BOTH timers OFF.

NOTE: *Push button once to open gate, push button again to close gate.*

Second Board with Timers OFF

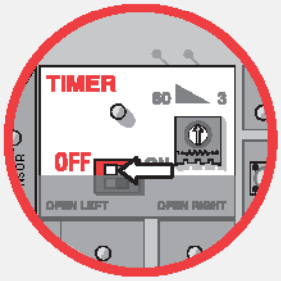

ADJUSTING REVERSING SENSOR(S)

Adjust the "**Reverse Sensor**" on the control board. **Alarm Sensor does not need to be adjusted except where noted below.**

The level of reverse sensitivity depends on the weight of the gate and the condition of installation.

Sensor is set too sensitive = if the gate stops in midcycle or reverses by itself.

Sensor is not set sensitive enough = if the gate hits an object and does not stop or reverse.

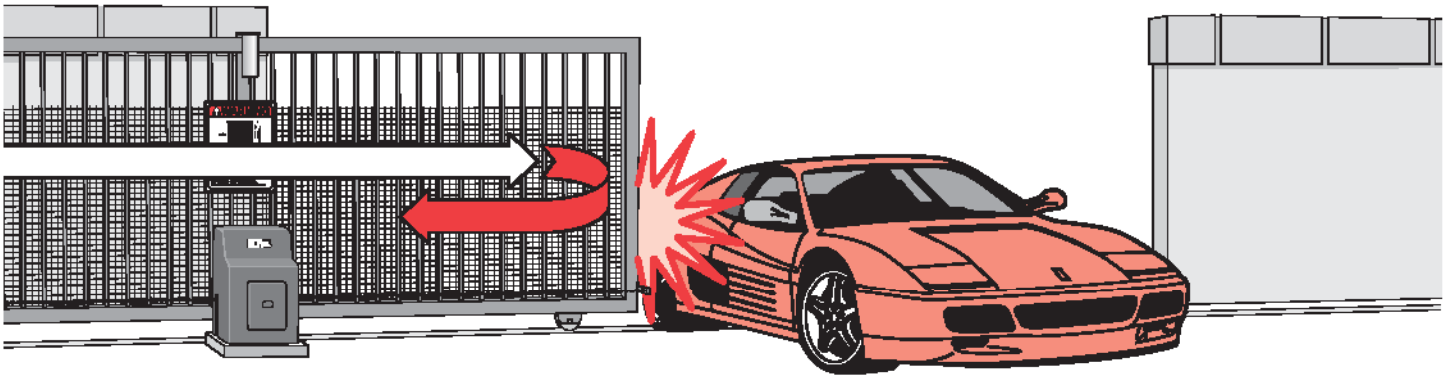

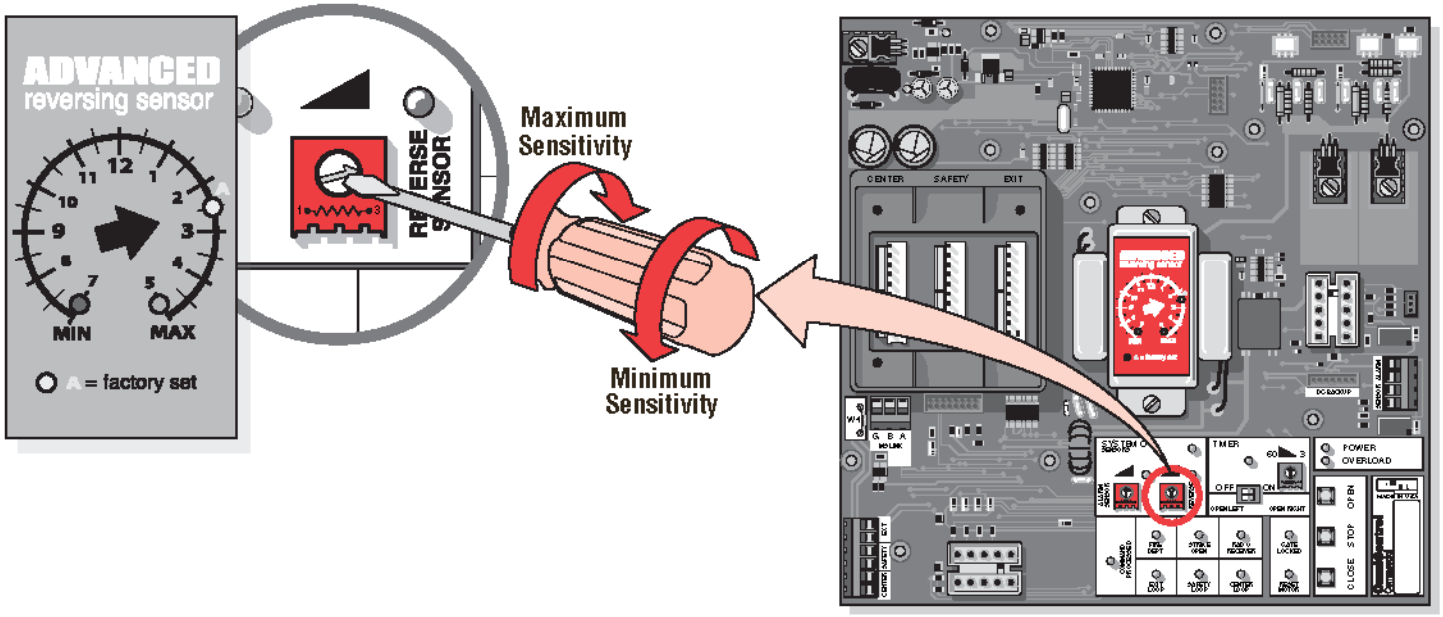

DC2000™ Reverse Sensor

The DC2000™ has a separate reverse sensor that will need to be adjusted. The 120 Vac operator power needs to be turned off and the DC2000™ should have the "**Charge OK**" LED **ON** to make the adjustment.

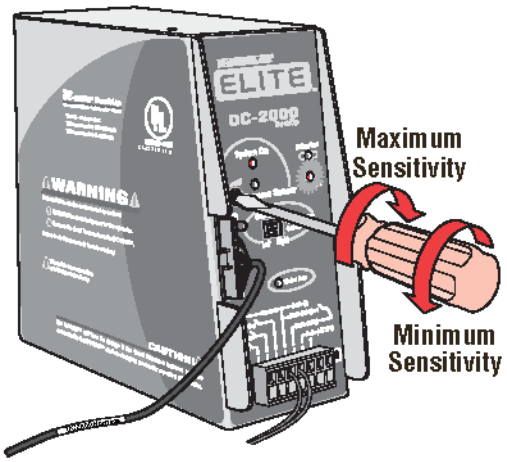

IMPORTANT SAFETY INSTRUCTIONS

⚠⚠WARNING

To reduce the risk of SEVERE INJURY or DEATH:

1. READ AND FOLLOW ALL INSTRUCTIONS.
2. NEVER let children operate or play with gate controls. Keep the remote control away from children.
3. ALWAYS keep people and objects away from the gate. NO ONE SHOULD CROSS THE PATH OF THE MOVING GATE.
4. Test the gate operator monthly. The gate MUST reverse on contact with a rigid object or stop when an object activates the non-contact sensors. After adjusting the force or the limit of travel, retest the gate operator. Failure to adjust and retest the gate operator properly can increase the risk of INJURY or DEATH.
5. Use the emergency release ONLY when the gate is not moving.
6. KEEP GATES PROPERLY MAINTAINED. Read the owner's manual. Have a qualified service person make repairs to gate hardware.
7. The entrance is for vehicles ONLY. Pedestrians MUST use separate entrance.
8. Disconnect ALL power BEFORE performing ANY maintenance.
9. ALL maintenance MUST be performed by a Chamberlain Elite professional.
10. **SAVE THESE INSTRUCTIONS.**

MAINTENANCE:

1. Disconnect power before servicing.
2. The gate area should be kept clean to insure proper operation.
3. Check for belt tightness.
4. Check chain for tightness. Refer to chain distance and height page.
5. Make sure the reversing sensor is functioning properly. Check it monthly. (Page 29)
6. Make sure the gate track is clear of dirt, rocks or other substances.
7. Make sure the wheels are operating smoothly on the track.
8. Oil the chain regularly with a chain lubrication oil available at most motorcycle stores.
9. Check for proper synthetic oil level in the gear box. (10W-30 weight synthetic oil)
10. Severe or high cycle usage will require more frequent maintenance checks.
11. Inspection and service should always be performed anytime a malfunction is observed or suspected.
12. When servicing, please do some "house cleaning" of the operator and the area around the operator. Pick up any debris in the area. Clean the operator as needed.
13. It is suggested that while at the site voltage readings be taken at the operator. Using a Digital Voltmeter, verify that the incoming voltage to the operator it is within ten percent of the operators rating.
14. Verify all safety and entrapment devices are functioning.

BUILT-IN RESET SWITCH

When the gate operator's audio alarm has been tripped (see below), the reset switch must be pushed for the operator to function again.

The reset switch will shut off an activated audio alarm and reset the operator to function again.

If the audio alarm goes off, always check the gate area for:

- *Obstructions in the gate path.*
- *Damage to the gate and/or gate operator.*

Pressing the reset switch will stop a moving gate during a normal open/close cycle, like a stop button. The operator does NOT need to be reset after doing this.

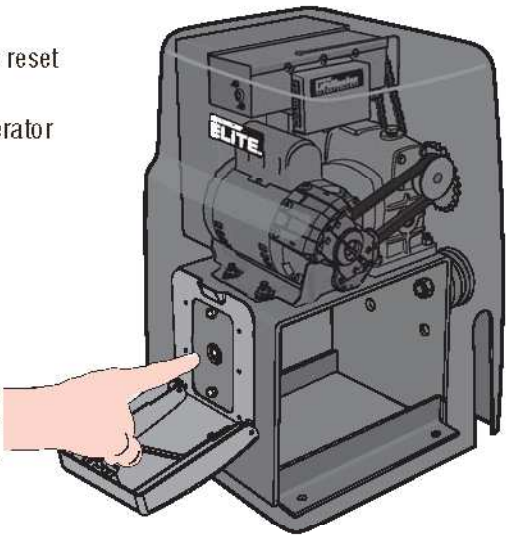

AUDIO ALARM

The alarm could be tripped when one of the following happens ***Twice Consecutively,*** then the alarm will sound for **5 minutes or until the reset switch is pressed!**

Press the Built-In Reset Switch to Shut Off Alarm and Reset Operator (See above)

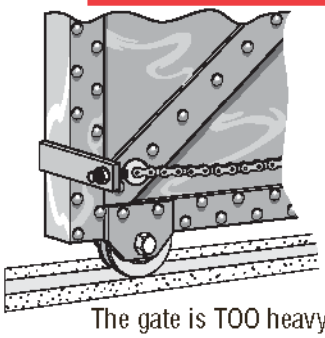

The gate is TOO heavy.

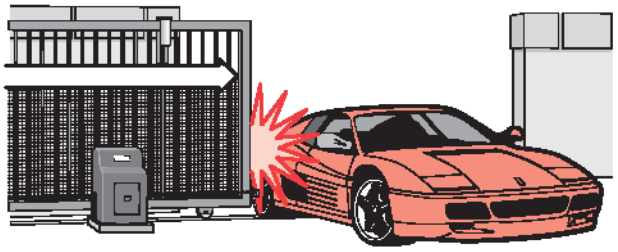

The gate is hitting a wall or vehicle.

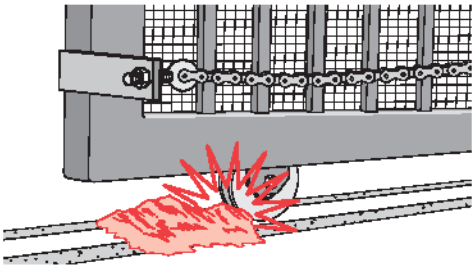

Debris is on the gate's track such as mud, rocks, dirt, etc.

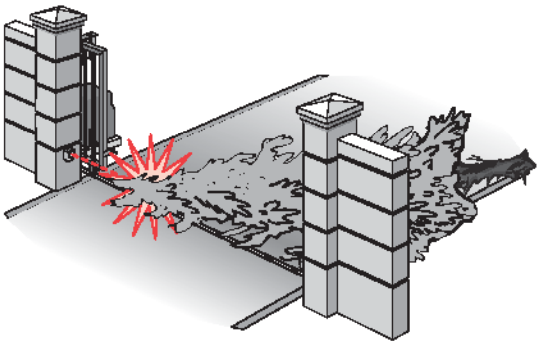

An externally wired safety sensor has been triggered twice. (Photo beam blocked)

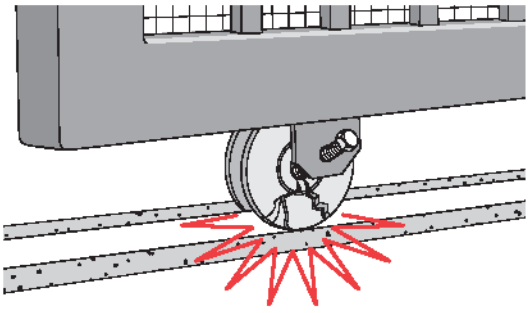

The gate has one or more broken axles or wheels.

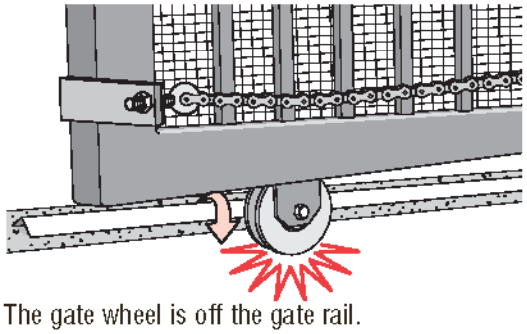

The gate wheel is off the gate rail.

EMERGENCY MANUAL RELEASE

Turn the power OFF!

NOTE: *Use the dedicated breaker switch to disconnect power to the operator.*

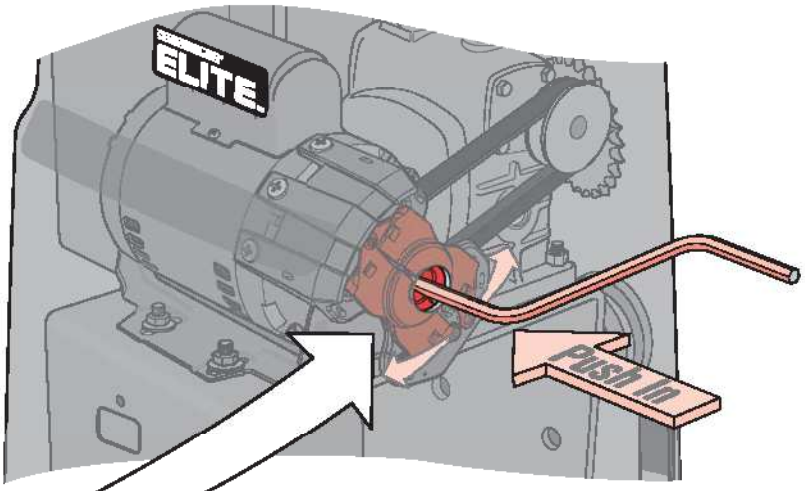

Push the crank tool in hole. Safety releases will separate. Turn the crank to open the gate.

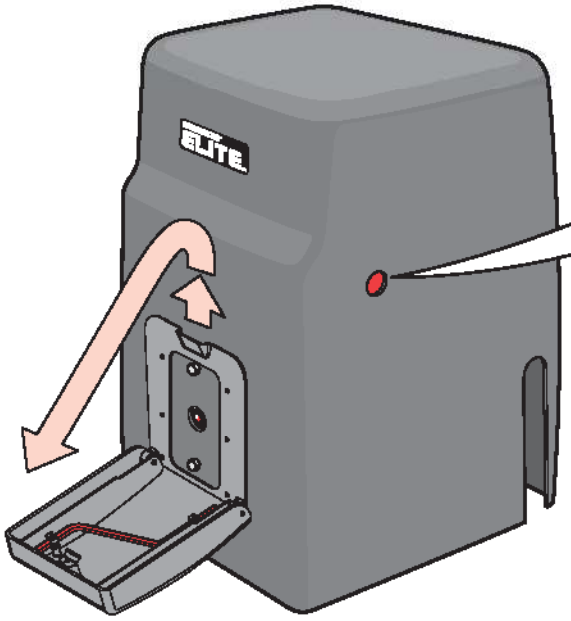

Remove crank tool.

NOTE: *YOU may use a cordless power drill (6"/sec) for quicker opening in non-emergency situations.*

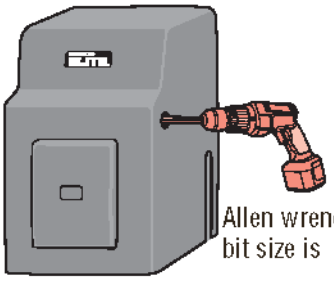

Allen wrench drill bit size is 5/16"

OPTIONAL MANUAL RELEASE

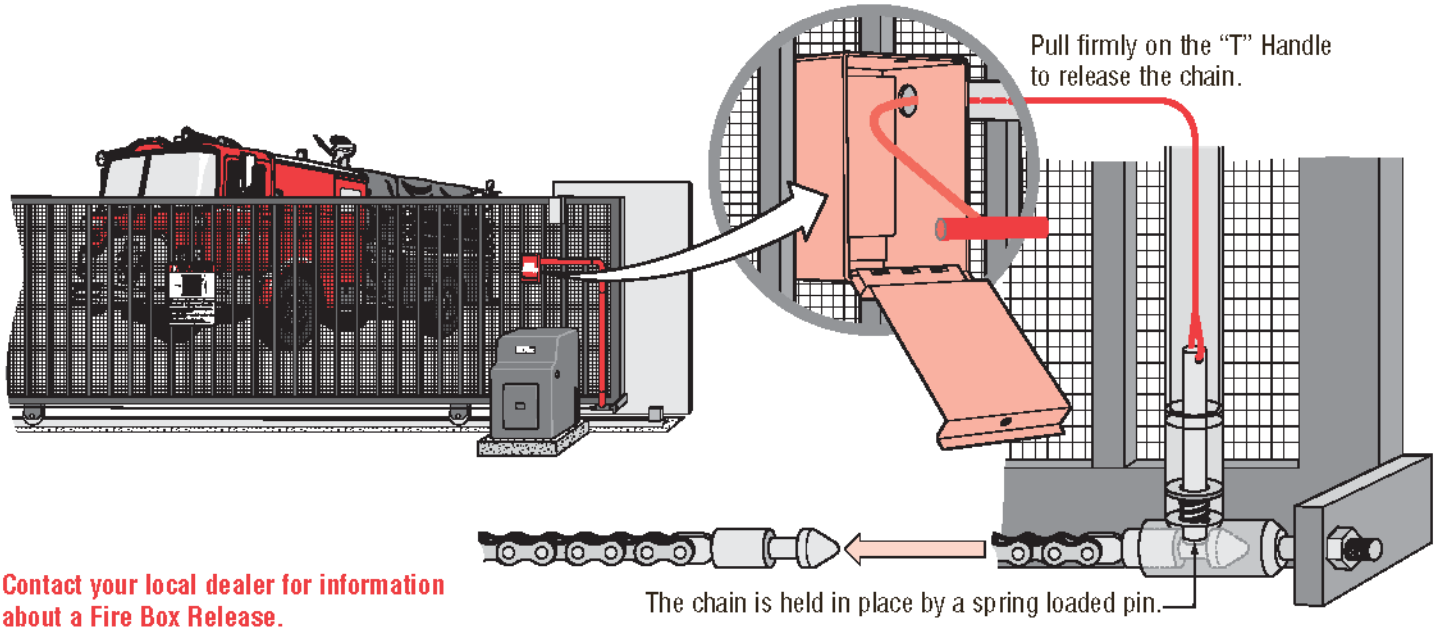

Pull firmly on the "T" Handle to release the chain.

The chain is held in place by a spring loaded pin.

Contact your local dealer for information about a Fire Box Release.

Accessories

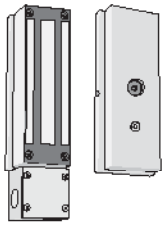

Magnetic Lock (Outdoor)
Part # MG1300

Relay Adapter Module
Part # Q400MAU

Quick Close Circuit (QCC)
Part # OQCCOMNI

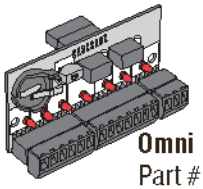

Omni Option Board
Part # OOMNIEXB

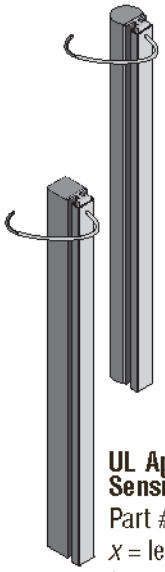

UL Approved Round Sensing Edge
Part # G65MGR20*x*
x = length (4, 5, 6 ,8 ft)
(e.g. G65MGR206 is 6 ft)

UL Approved Square Sensing Edge
Part # G65MGS20*x*
x = length (4, 5, 6 ,8 ft)
(e.g. G65MGS204 is 4 ft)

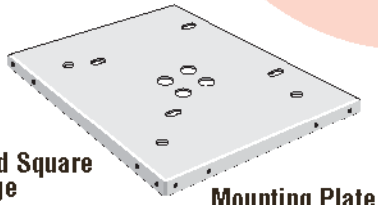

Mounting Plate
Part # MPEL

DC2000™ Kit
Part # ODC2000SL

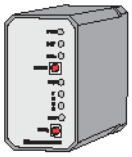

12 VDC External Loop Detectors
Part # A79

Plug-In Loop Detectors
Part # AELD

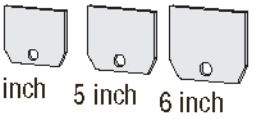

Brackets

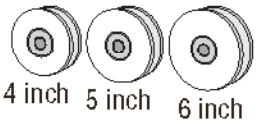

V-Groove Power Wheels Series

Remote Controls

For more information about accessories:
www.chamberlain.com

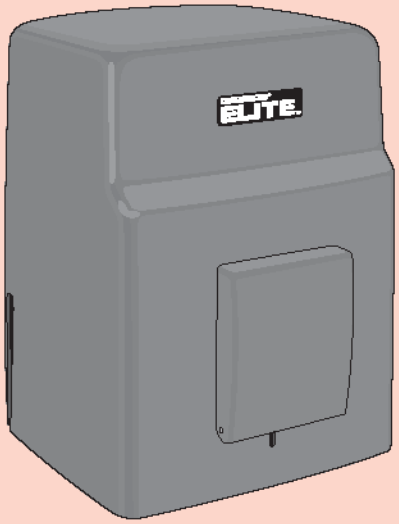

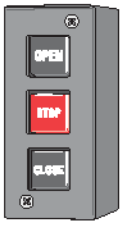

3-Button Control Station
Part # 02-103

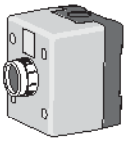

Stop Button
Part # AEXITP

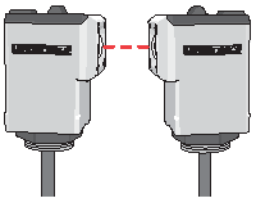

24 VDC Photo Sensors
Part # CPSN4

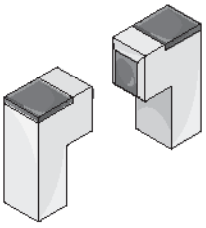

24 VDC Photo Sensors
Part # CPS-L & CPS-LN4

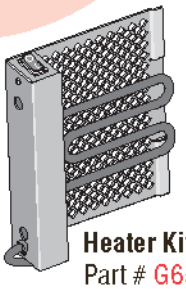

Heater Kit
Part # G6518SL

LiftMaster SECURITY+

Mini 3 Button
Part # 370LM

Part # 371LM

Part # 373LM

Part # 372LM

Part # 374LM

LiftMaster PASSPORT™

Part # CPT13

Part # CPT33

Part # CPT23

Part # CPT43

Mini 3 Button
Part # CPTK33

Mini 3 Button with HID Prox, Sensor
Part # CPTK33PH

WIRING DIAGRAM • SL3000UL™

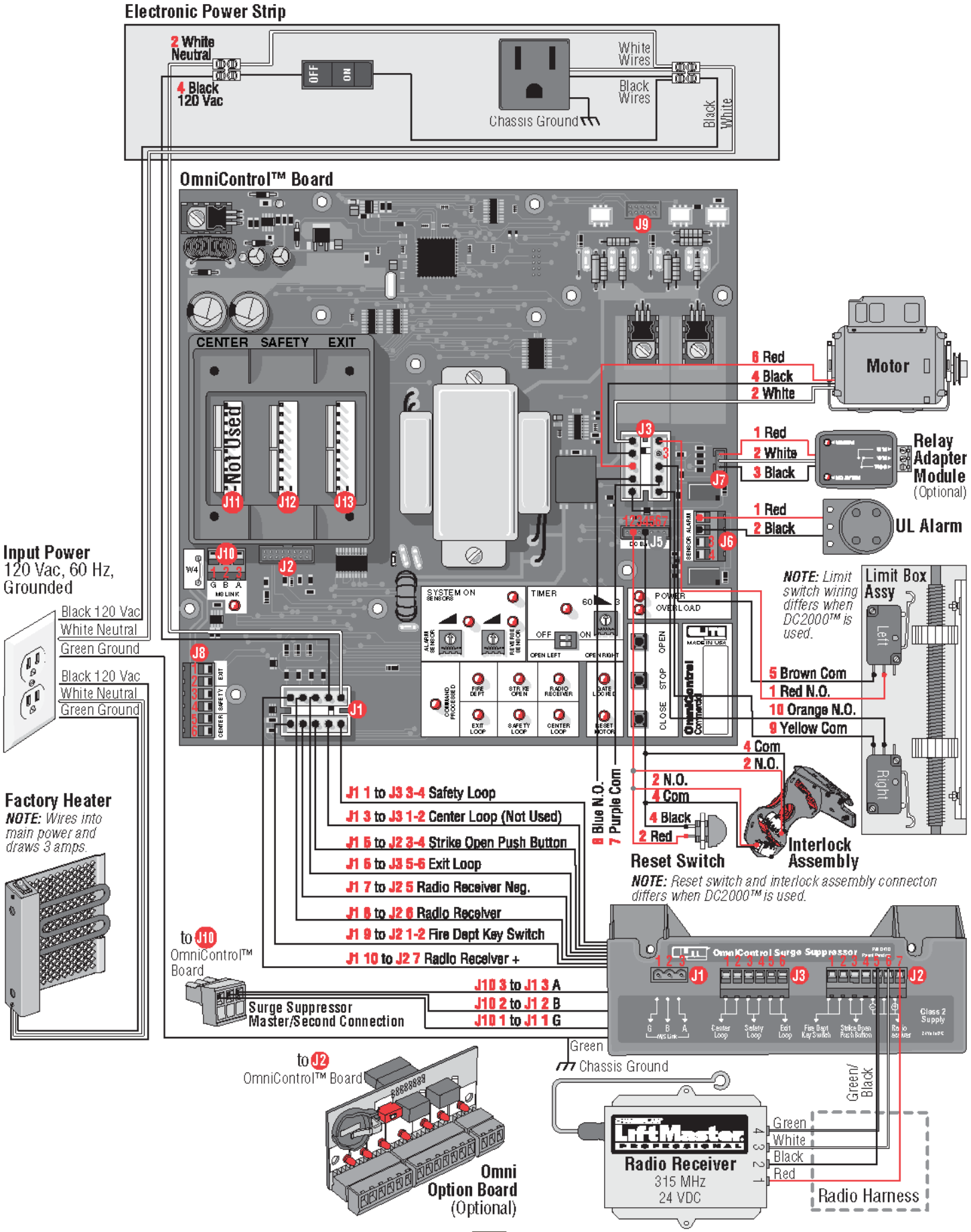

NOTE: See table on next page.

WIRING TABLE • SL3000UL™

OmniControl™ Board					
J #	J Pin #	Signal Type	Direction	Level (+/- 10%)	Input Connection
J1	1	Safety Loop	In	5 or 0 VDC	External Loop Detector Wires, 120 Vac Power, Radio Receiver, Strike Open, Key Switch Harness
J1	2	Input Power Neutral	In	0 V	
J1	3	Not Used	–	–	
J1	4	Input Power 120 Vac	In	120 Vac	
J1	5	Strike Open	In	5 or 0 VDC	
J1	6	Exit Loop	In	5 or 0 VDC	
J1	7	Radio Receiver –	In	0 V	
J1	8	Radio Receiver	In	0 V	
J1	9	Fire Dept Key Switch	In	Dry	
J1	10	Radio Receiver +	Out	24 VDC	
J2	10 Pins	Omni Option Board	Out	24 VDC	Omni Option Board Input
J3	1	Limit Switch Red N.O.	Out	0 V	Motor(s), Limit Switches, Maglock/Solenoid Harness
J3	2	Motor White	Out	0 V	
J3	3	Normally Closed (No Wire)	In	5 or 0 VDC	
J3	4	Motor Black	Out	120 Vac	
J3	5	Limit Switch Brown Com	In	0 V	
J3	6	Motor Red	In	5 or 0 VDC	
J3	7	Purple Com	In	0 V	
J3	8	Blue N.O.	In	5 or 0 VDC	
J3	9	Limit Switch Yellow Com	In	0 V	
J3	10	Limit Switch Orange N.O.	In	5 or 0 VDC	
J5	1	–	In	–	Reset Switch and Interlock Assembly Input
J5	2	Reset Switch, Interlock Red	In	Dry	
J5	3	–	In	–	
J5	4	Reset Switch, Interlock Black	In	Dry	
J5	5	–	In	–	
J5	6	–	In	–	
J5	7	–	In	–	
J6	1	UL Alarm Red	Out	24 VDC	UL Alarm and Safety Sensors
J6	2	UL Alarm Black	Out	0 VDC	
J6	3	Safety Sensor	In	5 or 0 VDC	
J6	4	Safety Sensor	In	0 V	
J7	1	Relay Adapter Red	In	5 or 0 VDC	Relay Adapter Module Input
J7	2	Relay Adapter White	In	0 VDC	
J7	3	Relay Adapter Black	In	0 VDC	
J8	1	Plug-In Exit Loop Wire	In	2 to 10 VDC	Plug-In Loop Detector Loop Wire Inputs
J8	2	Plug-In Exit Loop Wire	In	2 to 10 VDC	
J8	3	Plug-In Safety Loop Wire	In	2 to 10 VDC	
J8	4	Plug-In Safety Loop Wire	In	2 to 10 VDC	
J8	5	Not Used	–	–	
J8	6	Not Used	–	–	
J9	16 Pins	1 HP Board	–	–	Not Used
J10	1	G M/S Link	In/Out	0 VDC	Master/Second Link
J10	2	B M/S Link	In/Out	5 or 0 VDC	
J10	3	A M/S Link	In/Out	5 or 0 VDC	
J11	10 Pins	Not Used	–	–	Plug-In Loop Detector Inputs
J12	10 Pins	Safety Loop Detector	In	5 or 0 VDC	
J13	10 Pins	Exit Loop Detector	In	5 or 0 VDC	

OmniControl™ Surge Suppressor					
J1	1	G M/S Link (G)	In/Out	0 V	Master/Second Link Input
J1	2	B M/S Link (B)	In/Out	5 or 0 VDC	
J1	3	A M/S Link (A)	In/Out	5 or 0 VDC	
J2	1	Fire Dept. Key Switch (7)	In	Dry	Radio Receiver, Strike Open Push Button, Fire Dept Key Switch Inputs
J2	2	Fire Dept. Key Switch (8)	In	Dry	
J2	3	Strike Open Push Button (9)	In	5 or 0 VDC	
J2	4	Strike Open Push Button (10)	In	0 V	
J2	5	Radio Receiver – (11)	In	0 V	
J2	6	Radio Receiver (12)	In	5 or 0 VDC	
J2	7	Radio Receiver + (13)	Out	24 VDC	
J3	1	Not Used	–	–	External Loop Detector Center, Safety, Exit Wires Input
J3	2	Not Used	–	–	
J3	3	Safety External Loop Detector (3)	In	2 to 10 VDC	
J3	4	Safety External Loop Detector (4)	In	2 to 10 VDC	
J3	5	Exit External Loop Detector (5)	In	2 to 10 VDC	
J3	6	Exit External Loop Detector (6)	In	2 to 10 VDC	

NOTE: *See diagram on previous page.*

WIRING DIAGRAM • SL3000ULDM™

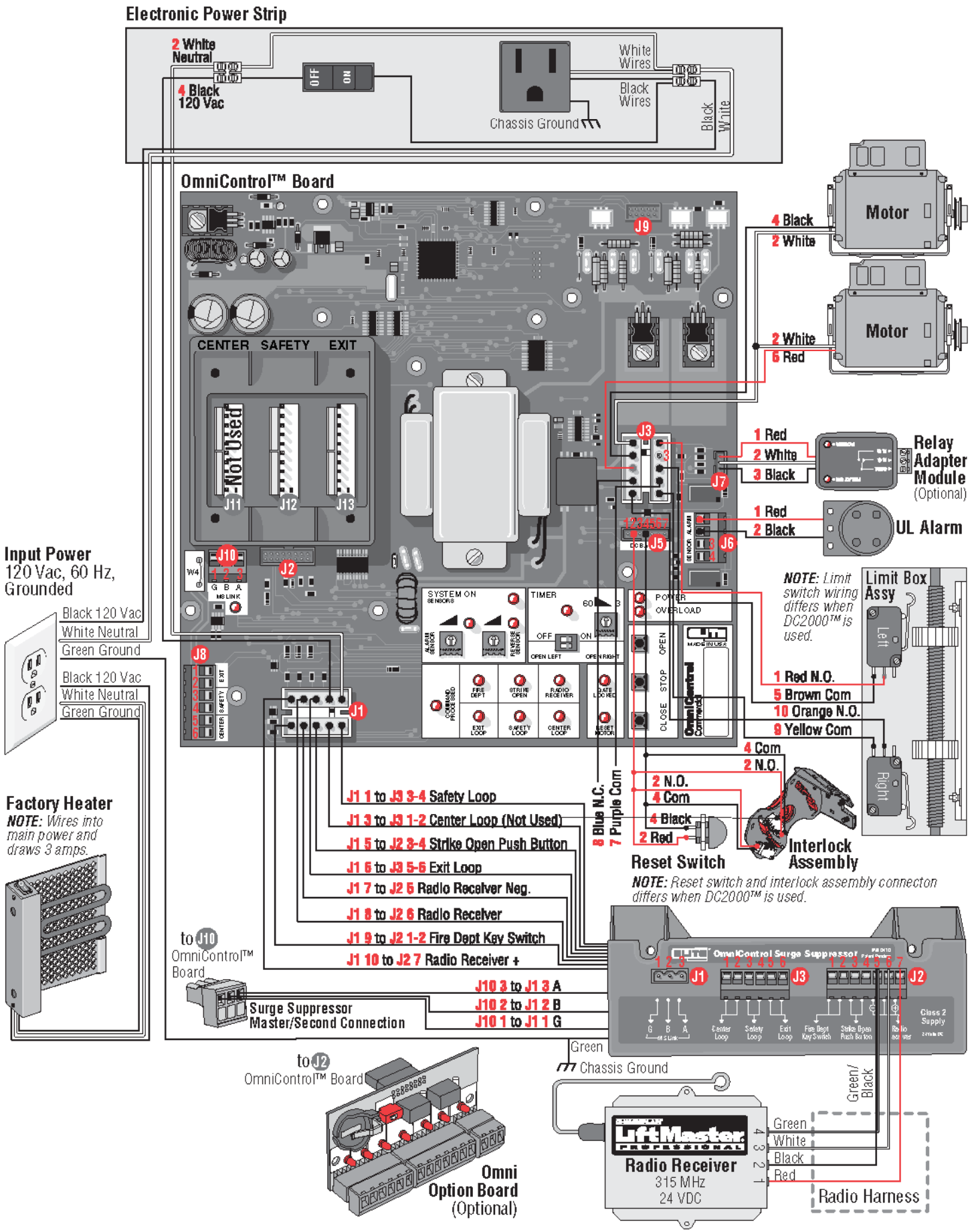

NOTE: See table on next page.

WIRING TABLE • SL3000ULDM™

OmniControl™ Board					
J #	J Pin #	Signal Type	Direction	Level (+/- 10%)	Input Connection
J1	1	Safety Loop	In	5 or 0 VDC	External Loop Detector Wires, 120 Vac Power, Radio Receiver, Strike Open, Key Switch Harness
J1	2	Input Power Neutral	In	0 V	
J1	3	Not Used	–	–	
J1	4	Input Power 120 Vac	In	120 Vac	
J1	5	Strike Open	In	5 or 0 VDC	
J1	6	Exit Loop	In	5 or 0 VDC	
J1	7	Radio Receiver –	In	0 V	
J1	8	Radio Receiver	In	0 V	
J1	9	Fire Dept Key Switch	In	Dry	
J1	10	Radio Receiver +	Out	24 VDC	
J2	10 Pins	Omni Option Board	Out	24 VDC	Omni Option Board Input
J3	1	Limit Switch Red N.O.	Out	0 V	Motor(s), Limit Switches, Maglock/Solenoid Harness
J3	2	Motor White	Out	0 V	
J3	3	Normally Closed (No Wire)	In	5 or 0 VDC	
J3	4	Motor Black	Out	120 Vac	
J3	5	Limit Switch Brown Com	In	0 V	
J3	6	Motor Red	In	5 or 0 VDC	
J3	7	Purple Com	In	0 V	
J3	8	Blue N.O.	In	5 or 0 VDC	
J3	9	Limit Switch Yellow Com	In	0 V	
J3	10	Limit Switch Orange N.O.	In	5 or 0 VDC	
J5	1	–	In	–	Reset Switch and Interlock Assembly Input
J5	2	Reset Switch, Interlock Red	In	Dry	
J5	3	–	In	–	
J5	4	Reset Switch, Interlock Black	In	Dry	
J5	5	–	In	–	
J5	6	–	In	–	
J5	7	–	In	–	
J6	1	UL Alarm Red	Out	24 VDC	UL Alarm and Safety Sensors
J6	2	UL Alarm Black	Out	0 VDC	
J6	3	Safety Sensor	In	5 or 0 VDC	
J6	4	Safety Sensor	In	0 V	
J7	1	Relay Adapter Red	In	5 or 0 VDC	Relay Adapter Module Input
J7	2	Relay Adapter White	In	0 VDC	
J7	3	Relay Adapter Black	In	0 VDC	
J8	1	Plug-In Exit Loop Wire	In	2 to 10 VDC	Plug-In Loop Detector Loop Wire Inputs
J8	2	Plug-In Exit Loop Wire	In	2 to 10 VDC	
J8	3	Plug-In Safety Loop Wire	In	2 to 10 VDC	
J8	4	Plug-In Safety Loop Wire	In	2 to 10 VDC	
J8	5	Not Used	–	–	
J8	6	Not Used	–	–	
J9	16 Pins	1 HP Board	–	–	Not Used
J10	1	G M/S Link	In/Out	0 VDC	Master/Second Link
J10	2	B M/S Link	In/Out	5 or 0 VDC	
J10	3	A M/S Link	In/Out	5 or 0 VDC	
J11	10 Pins	Not Used	–	–	Plug-In Loop Detector Inputs
J12	10 Pins	Safety Loop Detector	In	5 or 0 VDC	
J13	10 Pins	Exit Loop Detector	In	5 or 0 VDC	

OmniControl™ Surge Suppressor					
J1	1	G M/S Link (G)	In/Out	0 V	Master/Second Link Input
J1	2	B M/S Link (B)	In/Out	5 or 0 VDC	
J1	3	A M/S Link (A)	In/Out	5 or 0 VDC	
J2	1	Fire Dept. Key Switch (7)	In	Dry	Radio Receiver, Strike Open Push Button, Fire Dept Key Switch Inputs
J2	2	Fire Dept. Key Switch (8)	In	Dry	
J2	3	Strike Open Push Button (9)	In	5 or 0 VDC	
J2	4	Strike Open Push Button (10)	In	0 V	
J2	5	Radio Receiver – (11)	In	0 V	
J2	6	Radio Receiver (12)	In	5 or 0 VDC	
J2	7	Radio Receiver + (13)	Out	24 VDC	
J3	1	Not Used	–	–	External Loop Detector Center, Safety, Exit Wires Input
J3	2	Not Used	–	–	
J3	3	Safety External Loop Detector (3)	In	2 to 10 VDC	
J3	4	Safety External Loop Detector (4)	In	2 to 10 VDC	
J3	5	Exit External Loop Detector (5)	In	2 to 10 VDC	
J3	6	Exit External Loop Detector (6)	In	2 to 10 VDC	

NOTE: *See diagram on previous page.*

WIRING DIAGRAM • SL3000UL1HP™

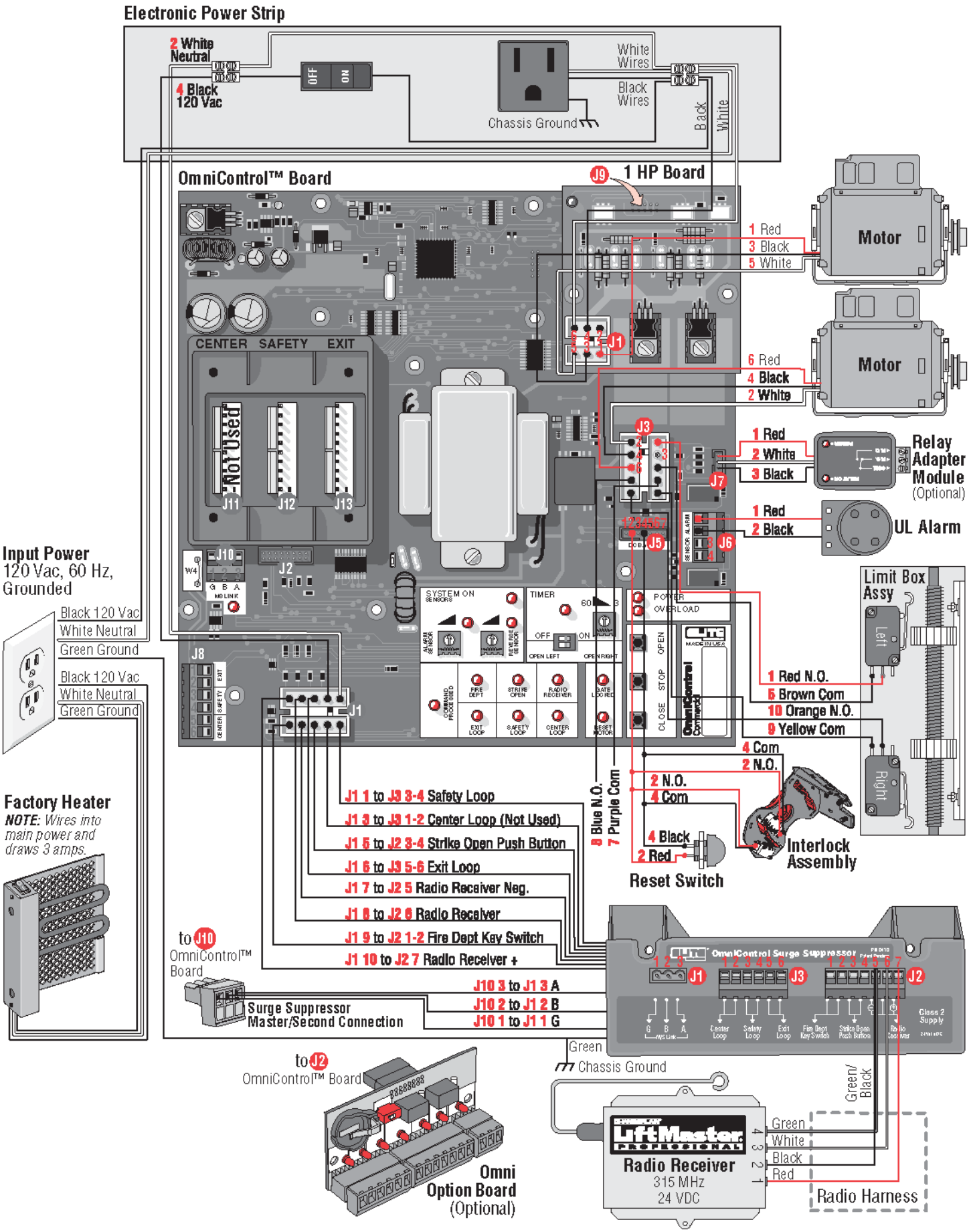

NOTE: See table on next page.

WIRING TABLE • SL3000UL1HP™

OmniControl™ Board					
J #	**J Pin #**	**Signal Type**	**Direction**	**Level (+/- 10%)**	**Input Connection**
J1	1	Safety Loop	In	5 or 0 VDC	External Loop Detector Wires, 120 Vac Power, Radio Receiver, Strike Open, Key Switch Harness
J1	2	Input Power Neutral	In	0 V	
J1	3	Not Used	–	–	
J1	4	Input Power 120 Vac	In	120 Vac	
J1	5	Strike Open	In	5 or 0 VDC	
J1	6	Exit Loop	In	5 or 0 VDC	
J1	7	Radio Receiver –	In	0 V	
J1	8	Radio Receiver	In	0 V	
J1	9	Fire Dept Key Switch	In	Dry	
J1	10	Radio Receiver +	Out	24 VDC	
J2	10 Pins	Omni Option Board	Out	24 VDC	Omni Option Board Input
J3	1	Limit Switch Red N.O.	In	5 or 0 VDC	Limit Switches, Maglock/Solenoid Harness
J3	2	–	–	–	
J3	3	Normally Closed (No Wire)	In	5 or 0 VDC	
J3	4	–	–	–	
J3	5	Limit Switch Brown Com	In	0 V	
J3	6	–	–	–	
J3	7	Purple Com	In	0 V	
J3	8	Blue N.O.	In	5 or 0 VDC	
J3	9	Limit Switch Yellow Com	In	0 V	
J3	10	Limit Switch Orange N.O.	In	5 or 0 VDC	
J5	1	–	In	–	Reset Switch and Interlock Assembly Input
J5	2	Reset Switch, Interlock Red	In	Dry	
J5	3	–	In	–	
J5	4	Reset Switch, Interlock Black	In	Dry	
J5	5	–	In	–	
J5	6	–	In	–	
J5	7	–	In	–	
J6	1	UL Alarm Red	Out	24 VDC	UL Alarm and Safety Sensors
J6	2	UL Alarm Black	Out	0 VDC	
J6	3	Safety Sensor	In	5 or 0 VDC	
J6	4	Safety Sensor	In	0 V	
J7	1	Relay Adapter Red	In	5 or 0 VDC	Relay Adapter Module Input
J7	2	Relay Adapter White	In	0 VDC	
J7	3	Relay Adapter Black	In	0 VDC	
J8	1	Plug-In Exit Loop Wire	In	2 to 10 VDC	Plug-In Loop Detector Loop Wire Inputs
J8	2	Plug-In Exit Loop Wire	In	2 to 10 VDC	
J8	3	Plug-In Safety Loop Wire	In	2 to 10 VDC	
J8	4	Plug-In Safety Loop Wire	In	2 to 10 VDC	
J8	5	Plug-In Center Loop Wire	In	2 to 10 VDC	
J8	6	Plug-In Center Loop Wire	In	2 to 10 VDC	
J9	16 Pins	1 HP Board	In	120 Vac	1 HP Board Input
J10	1	G M/S Link	In/Out	0 VDC	Master/Second Link
J10	2	B M/S Link	In/Out	5 or 0 VDC	
J10	3	A M/S Link	In/Out	5 or 0 VDC	
J11	10 Pins	Not Used	–	–	Plug-In Loop Detector Inputs
J12	10 Pins	Safety Loop Detector	In	5 or 0 VDC	
J13	10 Pins	Exit Loop Detector	In	5 or 0 VDC	

1 HP Board					
J1	1	Motor Red	Out	0 V	2 Motors Input
J1	2	Motor Black	Out	120 Vac	
J1	3	Motor White Neutral	Out	0 V	
J1	4	–	–	–	
J1	5	Motor Black	Out	120 Vac	
J1	6	Motor White Neutral	Out	0 V	

OmniControl™ Surge Suppressor					
J1	1	G M/S Link (G)	In/Out	0 V	Master/Second Link Input
J1	2	B M/S Link (B)	In/Out	5 or 0 VDC	
J1	3	A M/S Link (A)	In/Out	5 or 0 VDC	
J2	1	Fire Dept. Key Switch (7)	In	Dry	Radio Receiver, Strike Open Push Button, Fire Dept Key Switch Inputs
J2	2	Fire Dept. Key Switch (8)	In	Dry	
J2	3	Strike Open Push Button (9)	In	5 or 0 VDC	
J2	4	Strike Open Push Button (10)	In	0 V	
J2	5	Radio Receiver – (11)	In	0 V	
J2	6	Radio Receiver (12)	In	5 or 0 VDC	
J2	7	Radio Receiver + (13)	Out	24 VDC	
J3	1	Not Used	–	–	External Loop Detector Center, Safety, Exit Wires Input
J3	2	Not Used	–	–	
J3	3	Safety External Loop Detector (3)	In	2 to 10 VDC	
J3	4	Safety External Loop Detector (4)	In	2 to 10 VDC	
J3	5	Exit External Loop Detector (5)	In	2 to 10 VDC	
J3	6	Exit External Loop Detector (6)	In	2 to 10 VDC	

NOTE: *See diagram on previous page.*

WIRING DIAGRAM • DC2000™ FOR SINGLE AND DM

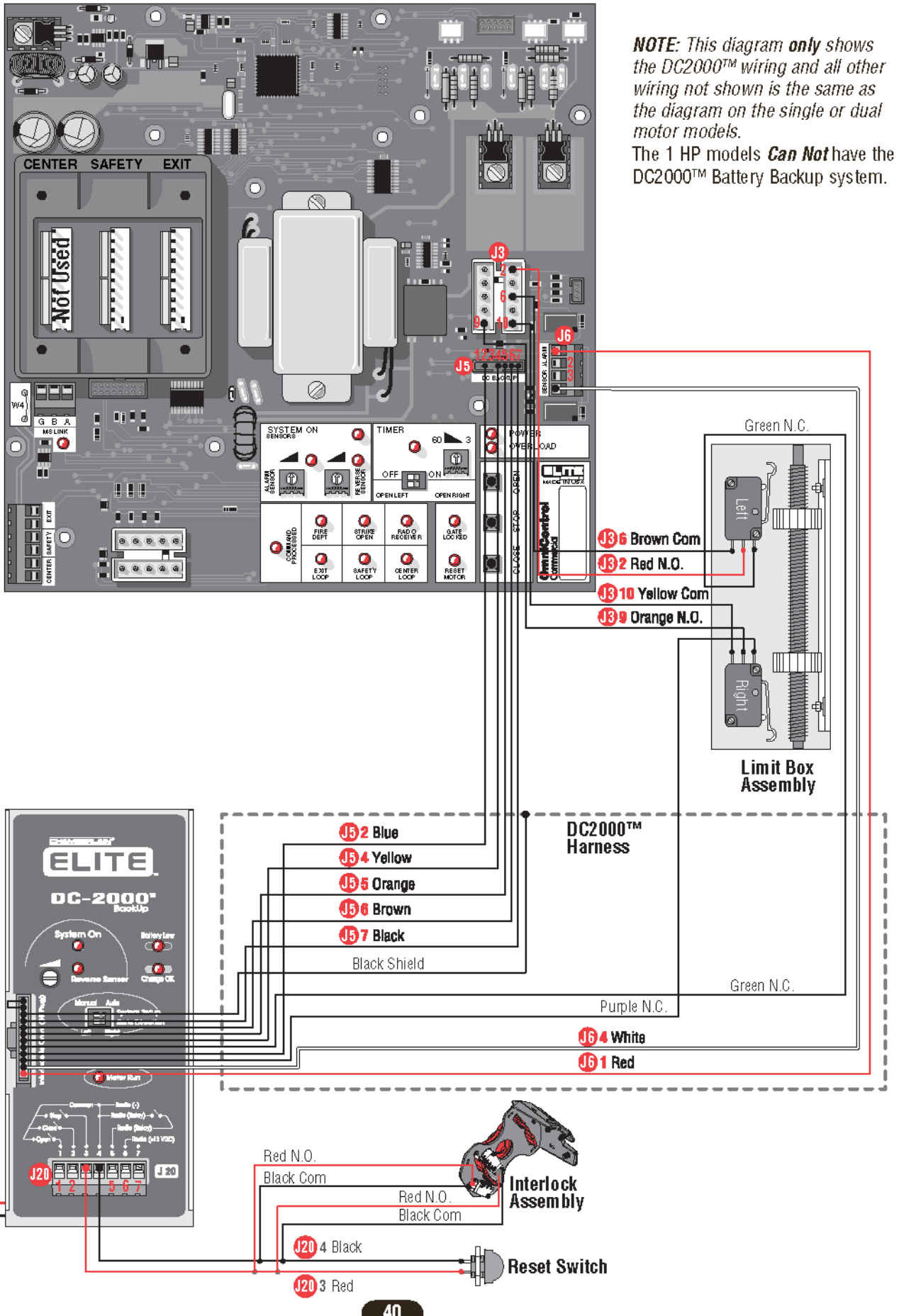

NOTE: *This diagram* ***only*** *shows the DC2000™ wiring and all other wiring not shown is the same as the diagram on the single or dual motor models.*

The 1 HP models ***Can Not*** have the DC2000™ Battery Backup system.

WIRING TABLE • DC2000™

NOTE: *All devices wired to the DC2000™ MUST be* ***dedicated*** *to it alone. Normal operation will be controlled by* ***separate*** *devices wired to the OmniControl™ board and surge suppressor.*

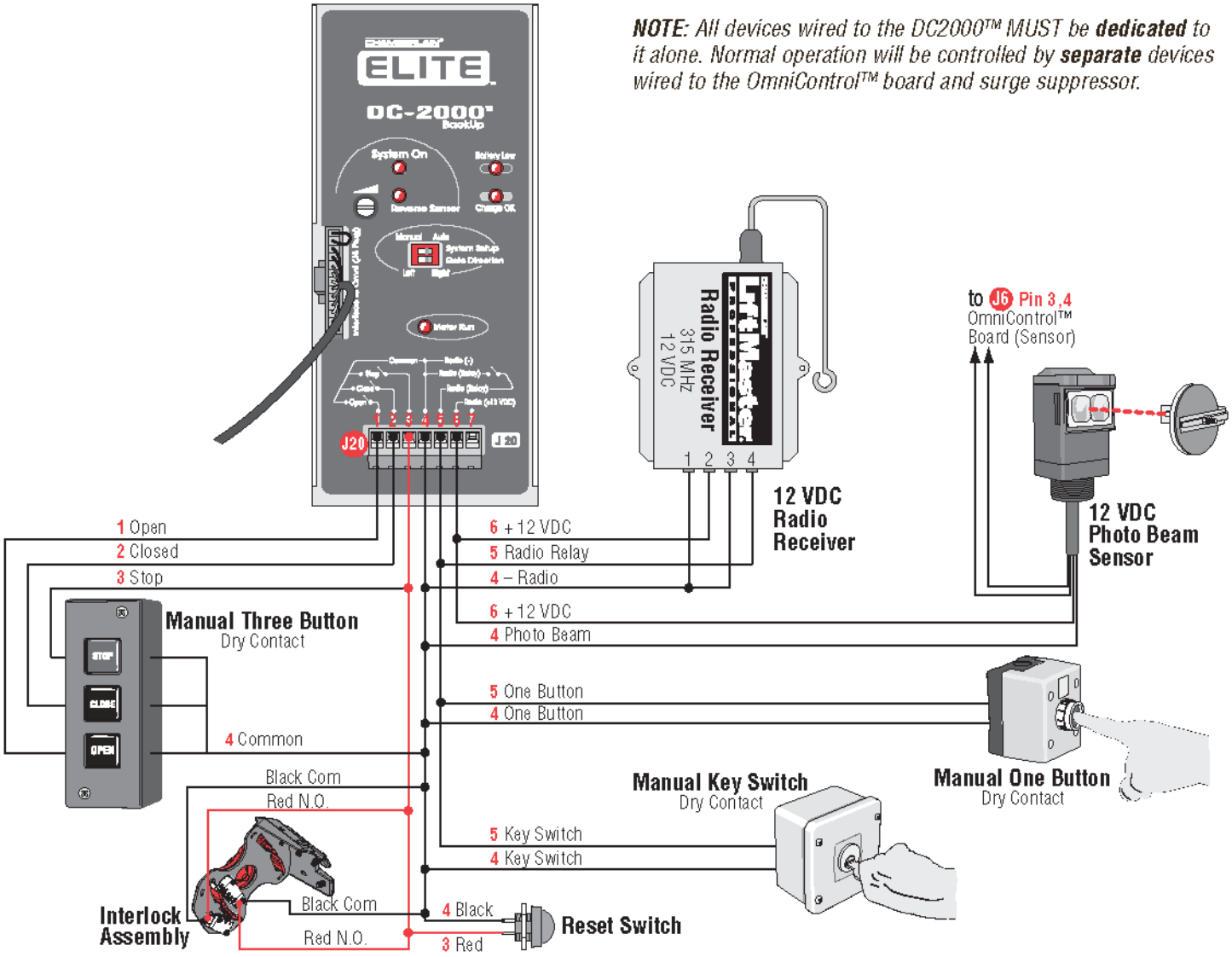

J #	J Pin #	Signal Type	Direction	Level (+/- 10%)	Input Connection
J20	1	Open N.O.	Out	5 or0 VDC	• Manual Three Button (Dry) Reset Switch
J20	2	Closed N.O.	Out	5 or 0 VDC	
J20	3	Stop N.O. Reset Switch	Out	5 or 0 VDC	
J20	4	Common Radio – Radio Relay Reset Switch/Interlock Assembly	Out	0 V	• Manual One Button (Dry) • Key Switch (Dry) • Radio Receiver Reset Switch/Interlock Assy
J20	5	One Button Key Switch Radio Relay	Out	0 V	• Manual One Button (Dry) • Key Switch (Dry) • Radio Receiver
J20	6	Radio + 12 VDC Photo Beam + 12 VDC	Out	12 or 0 VDC	• Radio Receiver 12 VDC • Photo Beam Sensor 12 VDC
J20	7	–	–	–	–

Troubleshooting

The Gate Will Not Operate with Remote:

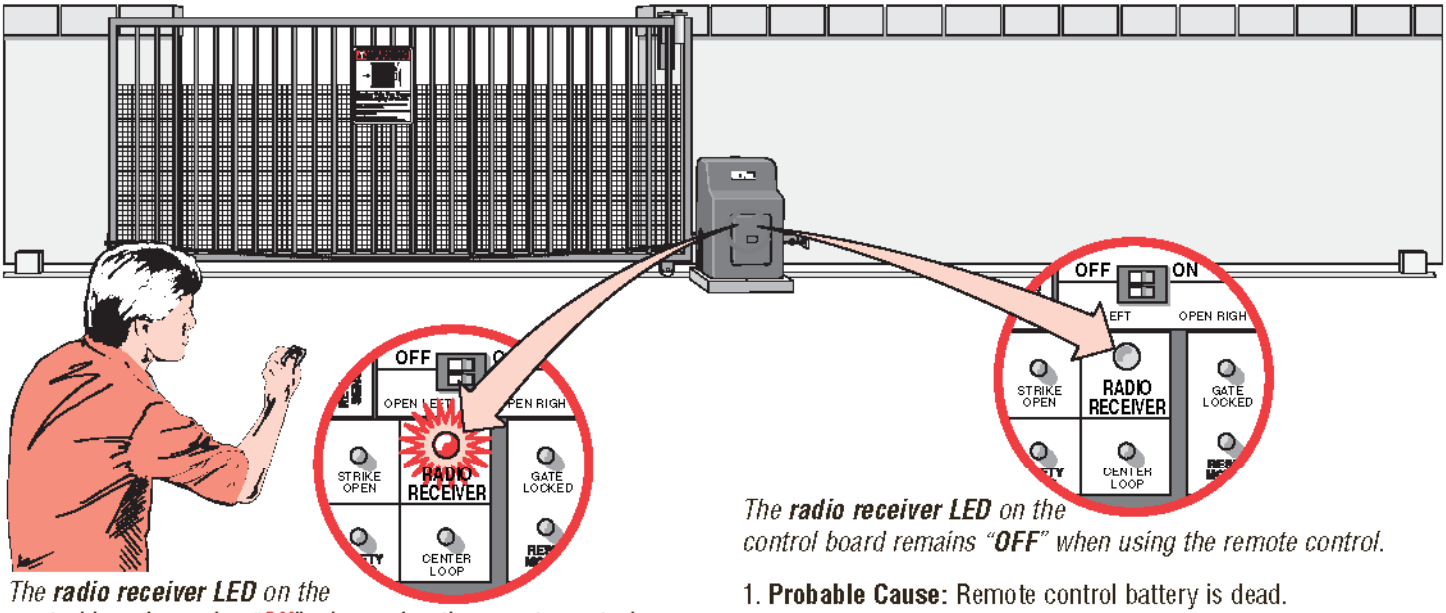

*The **radio receiver LED** on the control board remains "**ON**" when using the remote control.*

1. **Probable Cause:** Stuck remote control button.
   Solution: Unstick remote control button.
2. **Probable Cause:** The radio receiver has malfunctioned in the "**ON**" position.
   Solution: Cycle the power to the radio receiver.

*The **radio receiver LED** on the control board remains "**OFF**" when using the remote control.*

1. **Probable Cause:** Remote control battery is dead.
   Solution: Replace remote control battery.
2. **Probable Cause:** The radio receiver has malfunctioned in the "**OFF**" position.
   Solution: Cycle the power to the radio receiver.
3. **Probable Cause:** Radio receiver's signal is not getting to gate operator.
   Solution: Check wiring between receiver and surge suppressor.
4. **Probable Cause:** Remote is not programmed correctly.
   Solution: Reprogram remote control, see page 29.
5. **Probable Cause:** Remote is not on the same frequency as the radio receiver.
   Solution: Verify that remote control frequency is 315 MHz.
6. **Probable Cause:** Blown surge suppressor.
   Solution: Measure the resistance between pin 12 and 13 on the surge suppressor (see page 15), if the circuit "**closes**" when the radio receiver is transmitting, replace the surge suppressor.

Resetting Motor(s)

***NOTE:** Press firmly to reset thermal breaker button(s). A long slotted screwdriver may be needed to reach button on upper motor.*

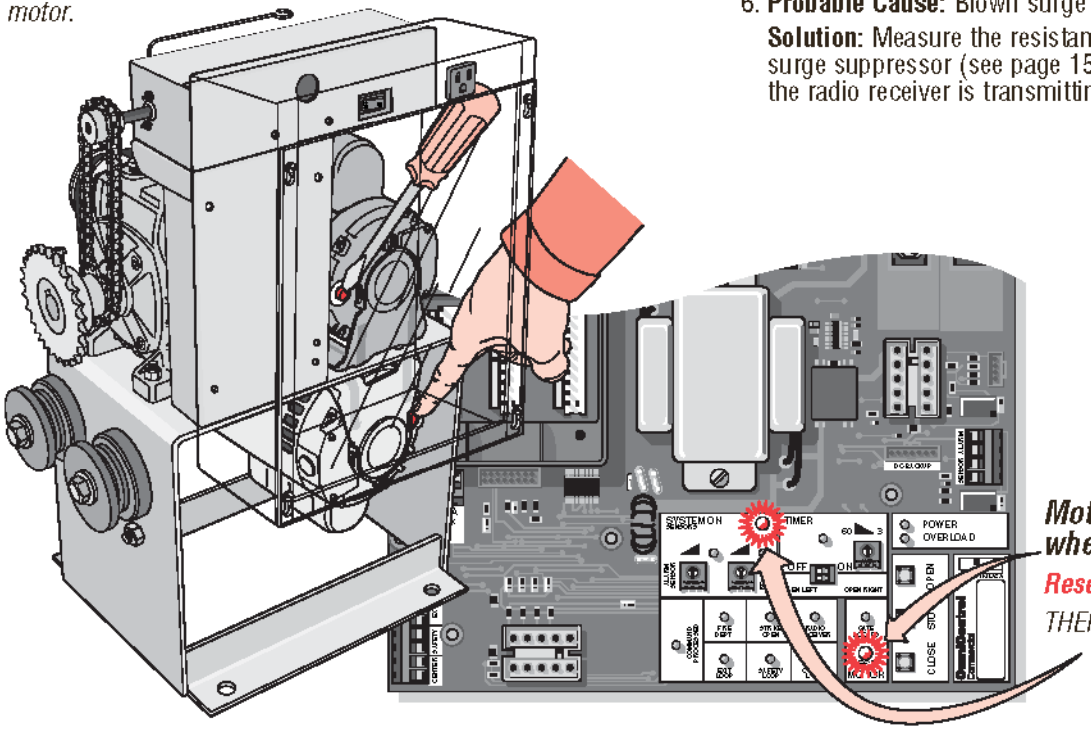

Motor(s) need resetting when:

Reset Motor LED light flashes once, *THEN*

TROUBLESHOOTING CONTINUED

Condition	*Probable Causes*	*Solution*
Overload LED ON and Power LED OFF	1. Short circuit at terminals 11 and 13. 2. Short circuit at any of the loop detectors in the board. 3. Short circuit in the control board.	1. Remove the short circuit condition at the terminals. 2. Remove the defective loop detector. 3. Send the board to repair.
Overload LED ON and Power LED ON	1. Excessive current draw at terminal 13. 2. Over-voltage at the 120 Vac line input.	1. Reduce the accessories load from surge suppressor terminal 13. 2. Verify your electrical power.
System On LED Flashing	1. One limit switch is faulty (Rapid Flashing). 2. Motor thermal fuse has popped-out (Slowly Flashing).	1. Test the limit switches and wire connections, fix the fault. 2. Reset the motor.
Reverse Sensor LED ON	1. Gate has encountered an obstruction during traveling. 2. Reverse sensor is extra sensitive..	1. Remove the obstruction. 2. Turn the reverse sensor switch counter clockwise a little more and try again.
Alarm Sensor LED ON	1. Gate encountered an obstruction during traveling. 2. Alarm sensor is extra sensitive.	1. Remove the obstruction. 2. Turn the alarm sensor switch counter clockwise a little more and try again.
Command Processed LED ON	1. There is a command hold active.	1. This is a normal response of the gate operator. It does not represent necessarily that there is a problem.
Timer LED Blinking and Command Processed LED Blinking	1. There is a command holding the gate open.	1. This is a normal response of the gate operator. It does not represent necessarily that there is a problem. Check inputs for command.
Timer LED Blinking, Command Processed LED Blinking and Reverse Sensor LED ON	1. Gate has reopened because it encountered an obstruction while closing.	1. Any re-new command will resume normal operation. Check for obstructions.
Audio Alarm ON	1. Gate has encountered two consecutive obstructions while trying to close or open.	1. Any re-new command will resume normal operation but not a radio command. Check for obstructions. 2. You can stop the alarm by using the built-in reset button. 3. You can stop the alarm by using an optional stop button.
Any Loop LED ON and No vehicle on the sensing area	1. The loop detector needs to be reset. 2. The wire loop has been disrupted. 3. The loop detector needs to work in a different frequency. 4. The loop detector is too sensitive.	1. Reset the loop detector (If you use Elite Plug-in Loop detectors, change the setting for sensitivity and come back to your original setting). 2. Verify and correct connections. 3. Set a different working frequency. 4. Decrease the sensitivity of the loop detector.

For technical support: **1-800-528-2806**

Repair Parts

REPAIR PART ILLUSTRATIONS

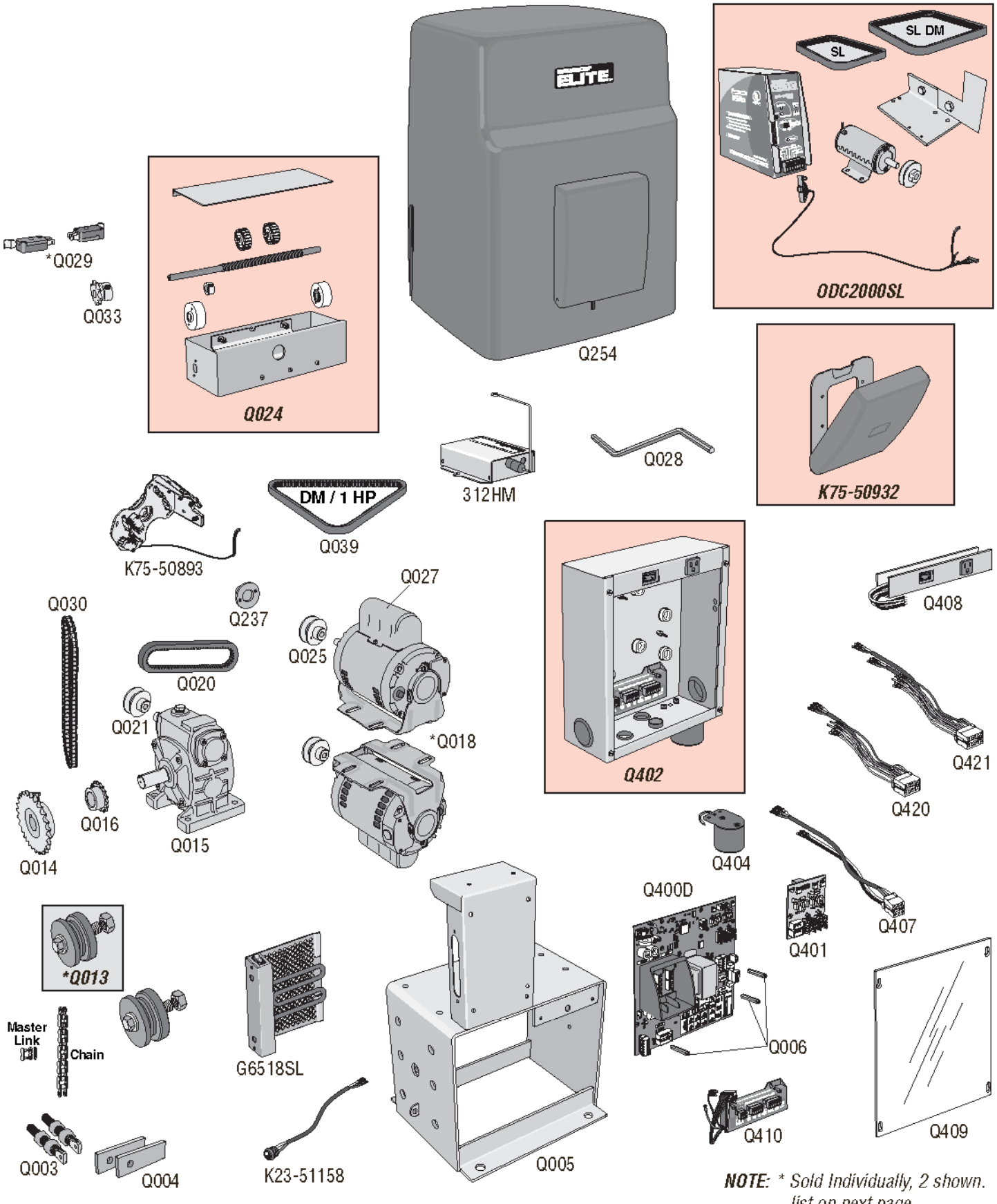

NOTE: ** Sold Individually, 2 shown. list on next page.*

HOW TO ORDER REPAIR PARTS

OUR LARGE SERVICE ORGANIZATION SPANS AMERICA. INSTALLATION AND SERVICE INFORMATION IS AS NEAR AS YOUR TELEPHONE. SIMPLY DIAL OUR TOLL FREE NUMBER:

1-800-528-2806

www.chamberlain.com

WHEN ORDERING REPAIR PARTS, ALWAYS GIVE THE FOLLOWING INFORMATION:

- PART NUMBER
- PART NAME
- MODEL NUMBER

Address orders to:

THE CHAMBERLAIN GROUP, INC.
Technical Support Group
6020 S. Country Club Road
Tucson, Arizona 85706

REPAIR PART NAMES AND NUMBERS

Crank Housing Kit - K75-50932 - Manual Crank not Included

Power Back-Up Unit - ODC2000SL
- Drive Belt DC SL
- Drive Belt DC SL (DM)
- Back-Up Motor DC 12V
- Chassis DC Back-Up
- Hardware Kit for DC Back-Up
- Wire Harness DC2000
- Pulley DC2000 1/2 ID

Idler Pulley Assembly - Q013
- Bushing, 7/8" OD, .120" Wall x 1.950"
- Pulley, Idler, Molded Plastic, SL
- Screw, Hex, 5/8-11 x 2 3/4", Grade 5
- Nut, Hex, Jam, 5/8 -, S/Z
- Washer, Flat, 5/8", SAE, S/Z

Limit Switch Assembly - Q024
- Limit Switch Bolt
- Limit Switch Adjustment Nuts
- Limit Switch Sprocket
- Limit Switch Bearing Holder
- Collar 3/8 in

Electronic Box Assembly - Q402
- Electronic Metal Box
- Surge Suppressor
- Audio Alarm

NOTE: ***Assembly Parts Number***

AH110 - Chain no. 41 (10 ft)
AH111 - Chain no. 40 (10 ft)
AH112 - Chain no. 41 (Nickel Plated)
AH113 - Master Link no. 41
AH125 - Master Link no. 40
K23-51158 - Reset Switch Assembly
K75-50893 - Safety and Interlock Assembly
G6518SL - Heater
Q003 - Chain Bolt
Q004 - Chain Bracket
Q005 - SL-3000 Chassis
Q006 - PC Board Nuts (1 Set)
Q014 - Drive Sprocket
Q015 - Gear Reducer
Q016 - Limit Switch Drive Sprocket
Q018 - 1/2 HP Electric Motor
Q020 - Drive Belt
Q021 - Gear Pulley
Q025 - Motor Pulley
Q027 - Motor Capacitor
Q028 - Manual Crank
Q029 - Limit Switch
Q030 - Limit Switch / Chain
Q039 - Drive Belt, DM and 1 HP
Q237 - Crank Input
Q254 - Cover HD Polyethylene SL
Q400D - Omni Main PCB (OmniControl™)
Q401 - Omni 1 Horsepower Board
Q404 - Omni Siren
Q407 - Omni Motor Harness 1HP
Q408 - Omni Switch Channel
Q409 - Electronic Access Panel
Q410 - Surge Suppressor Terminal Block
Q420 - Omni Motor Harness Single Motor
Q421 - Omni Motor Harness DM
312HM - Radio Receiver

System Diagram

Installation Checklist

- ☐ *1.* Owner and Installer **must** read all warnings and safety precautions.
- ☐ *2.* Make sure concrete mounting pad is big enough and deep enough for operator.
- ☐ *3.* Operator must be **securely** fastened to concrete pad.
- ☐ *4.* Operator chain must be **4 inch Minimum** from gate. Chain must not be too tight or too loose.
- ☐ *5.* Gate operator should be grounded to an earth ground within 3 feet.
- ☐ *6.* Verify that power is connected properly. **Know where the main power disconnect is for operator(s).**
- ☐ *7.* Verify that the gate opens and closes as needed.
- ☐ *8.* When gate hits object during operation, it **must** stop or reverse, depending on the direction gate is traveling.
- ☐ *9.* Make sure that any pinch point or potential entrapment are guarded by means of safety devices or like.
- ☐ *10.* Warning placards need to be permanently mounted on **both** sides of gate(s).
- ☐ *11.* Test all additional equipment connected to operator.
- ☐ *12.* Make sure all wire connections are **securely** fastened.
- ☐ *13.* Review typical maintenance on operator.
- ☐ *14.* Schedule periodic maintenance on operator by qualified service technician.
- ☐ *15.* Inquire about Manufacturers "operator warranty". (Warranty Card Included with operator)
- ☐ *16.* Inquire about **separate** "installation warranty" with installer.

Installer Company Name, Address and Phone Number

Date of installation: _____

Warranty Policy

7 YEAR RESIDENTIAL/ 5 YEAR COMMERCIAL SL3000UL™ LIMITED WARRANTY

The Chamberlain Group, Inc. ("Seller") warrants to the first retail purchaser of this product, for the structure in which this product is originally installed, that it is free from defect in materials and/or workmanship for a period of 7 year residential/ 5 year commercial from the date of purchase [and that the SL3000UL™ is free from defect in materials and/or workmanship for a period of 7 year residential/ 5 year commercial from the date of purchase]. The proper operation of this product is dependent on your compliance with the instructions regarding installation, operation, maintenance and testing. Failure to comply strictly with those instructions will void this limited warranty in its entirety.

If, during the limited warranty period, this product appears to contain a defect covered by this limited warranty, call **1-800-528-2806**, toll free, before dismantling this product. Then send this product, pre-paid and insured, to our service center for warranty repair. You will be advised of shipping instructions when you call. Please include a brief description of the problem and a dated proof-of-purchase receipt with any product returned for warranty repair. Products returned to Seller for warranty repair, which upon receipt by Seller are confirmed to be defective and covered by this limited warranty, will be repaired or replaced (at Seller's sole option) at no cost to you and returned pre-paid. Defective parts will be repaired or replaced with new or factory-rebuilt parts at Seller's sole option.

ALL IMPLIED WARRANTIES FOR THE PRODUCT, INCLUDING BUT NOT LIMITED TO ANY IMPLIED WARRANTIES OF MERCHANTABILITY AND FITNESS FOR A PARTICULAR PURPOSE, ARE LIMITED IN DURATION TO THE 7 YEAR RESIDENTIAL/ 5 YEAR COMMERCIAL LIMITED WARRANTY PERIOD SET FORTH ABOVE [EXCEPT THE IMPLIED WARRANTIES WITH RESPECT TO THE SL3000UL™, WHICH ARE LIMITED IN DURATION TO THE 7 YEAR RESIDENTIAL/ 5 YEAR COMMERCIAL LIMITED WARRANTY PERIOD FOR THE SL3000UL™], AND NO IMPLIED WARRANTIES WILL EXIST OR APPLY AFTER SUCH PERIOD. Some States do not allow limitations on how long an implied warranty lasts, so the above limitation may not apply to you. THIS LIMITED WARRANTY DOES NOT COVER NON-DEFECT DAMAGE, DAMAGE CAUSED BY IMPROPER INSTALLATION, OPERATION OR CARE (INCLUDING, BUT NOT LIMITED TO ABUSE, MISUSE, FAILURE TO PROVIDE REASONABLE AND NECESSARY MAINTENANCE, UNAUTHORIZED REPAIRS OR ANY ALTERATIONS TO THIS PRODUCT), LABOR CHARGES FOR REINSTALLING A REPAIRED OR REPLACED UNIT, OR REPLACEMENT OF BATTERIES.

THIS LIMITED WARRANTY DOES NOT COVER ANY PROBLEMS WITH, OR RELATING TO, THE GARAGE DOOR OR GARAGE DOOR HARDWARE, INCLUDING BUT NOT LIMITED TO THE DOOR SPRINGS, DOOR ROLLERS, DOOR ALIGNMENT OR HINGES. THIS LIMITED WARRANTY ALSO DOES NOT COVER ANY PROBLEMS CAUSED BY INTERFERENCE. ANY SERVICE CALL THAT DETERMINES THE PROBLEM HAS BEEN CAUSED BY ANY OF THESE ITEMS COULD RESULT IN A FEE TO YOU.

UNDER NO CIRCUMSTANCES SHALL SELLER BE LIABLE FOR CONSEQUENTIAL, INCIDENTAL OR SPECIAL DAMAGES ARISING IN CONNECTION WITH USE, OR INABILITY TO USE, THIS PRODUCT. IN NO EVENT SHALL SELLER'S LIABILITY FOR BREACH OF WARRANTY, BREACH OF CONTRACT, NEGLIGENCE OR STRICT LIABILITY EXCEED THE COST OF THE PRODUCT COVERED HEREBY. NO PERSON IS AUTHORIZED TO ASSUME FOR US ANY OTHER LIABILITY IN CONNECTION WITH THE SALE OF THIS PRODUCT.

Some States do not allow the exclusion or limitation of consequential, incidental or special damages, so the above limitation or exclusion may not apply to you. This limited warranty gives you specific legal rights, and you may also have other rights which vary from state to state.

CHAMBERLAIN®

ELITE™

SL3000UL™

UL325 compliant UL991 compliant c UL us LISTED

845 Larch Avenue
Elmhurst, Illinois 60126-1196

© 2008, The Chamberlain Group, Inc. – All Rights Reserved

01-50388E

COUNTRY LANE 2.0 MG
ELEVATED STORAGE TANK

CITY OF ROCKWALL, TEXAS

SPECIFICATION SECTION: 1.03.Q

OPERATIONS & MAINTENANCE MANUAL

ELEVATOR

SUPPLIER / SUBCONTRACTOR
OTIS ELEVATOR
CONTACT: KUMAR VELLOO
1931 MARKET CENTER BOULEVARD #127
DALLAS, TEXAS 75207
(214) 658-6935

GENERAL CONTRACTOR
LANDMARK STRUCTURES I, LP
1665 HARMON ROAD
FORT WORTH, TEXAS 76177
(817) 439-8888

Owner's Information Manual

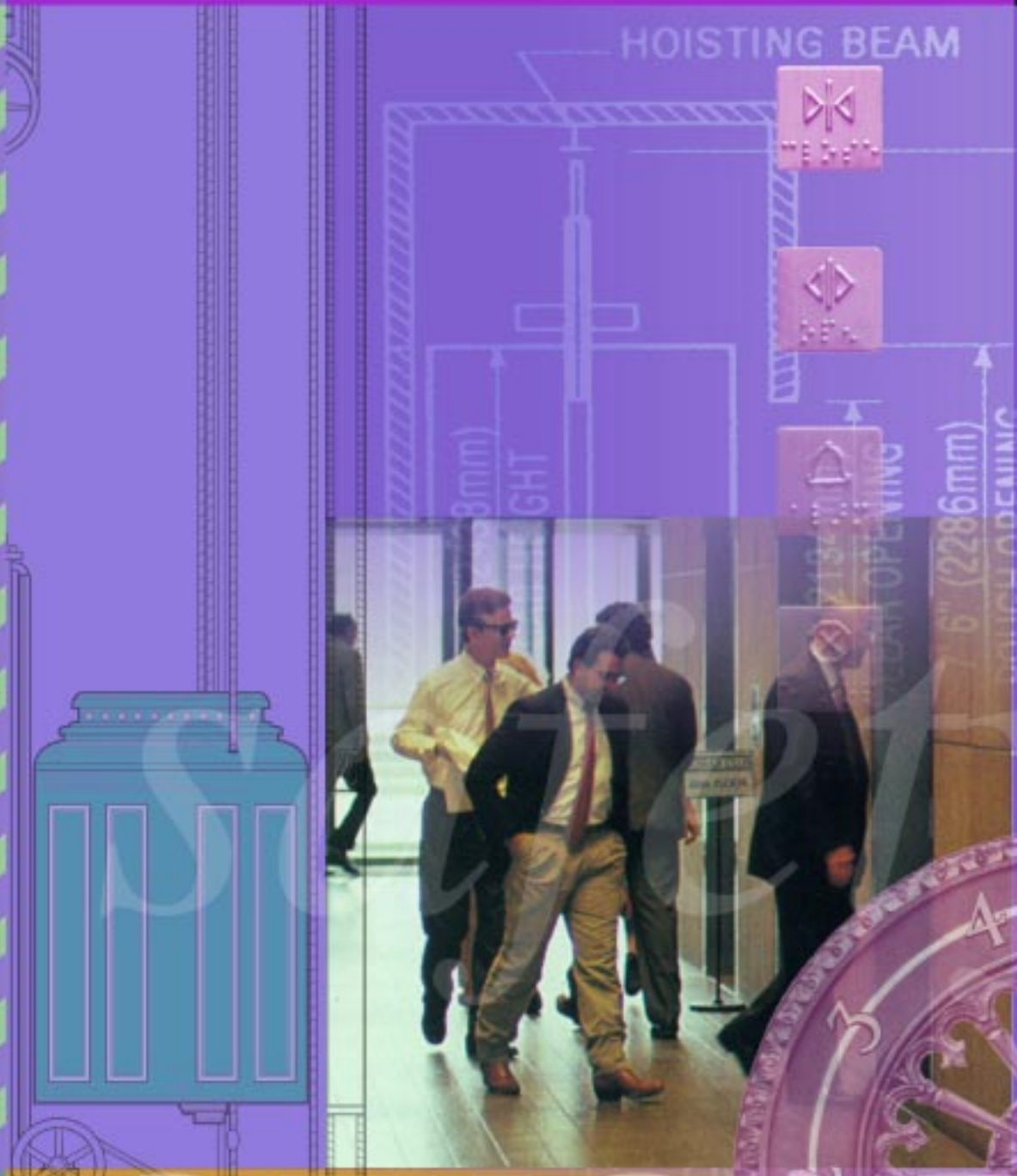

OTIS

Owner's Information Manual

Low-Rise Elevators

Otis Elevator Company

Publisher: Technical Publications Department, Otis Elevator Company

Writers: Karen Ansaldi, Jeff Costley, Mark Kamienski, Rob Rioux

Graphic Design & Composition: Heidi Graf

Additional Artwork: Chris Shaner, Paul Yuskales of the Freelance Exchange

Photographer: Jeff Yardis

Sources: Otis Elevator Company Archives
United Technologies Corporation Archives
Otis Elevator Company Communications Department
Otis Service Center

Registered Trademarks, Registered Service Marks, and Unregistered Marks are used within this publication - where applicable - to properly honor the claims of all companies.

This publication is intended for those individuals or organizations in ownership of elevator or escalator systems and equipment manufactured or sold by Otis Elevator Company. It is expressly designed to be informative and to offer a limited understanding of the operation of these systems. It is not intended to be a guide for servicing or repairing or installing elevator or escalator equipment. Professional providers of those services should be contacted to perform any work in a safe and professional manner.

Any unauthorized reproduction, disclosure, or distribution by any person of any portion of this publication may be a violation of Copyright Law of the United States of America and other countries and could result in the awarding of Statutory Damages of up to $250,000 (U.S. dollars) (17USC504) for infringement, and may result in further civil and criminal penalties.

Permission to use any portion of this publication should be addressed to:

Otis Elevator Company
Manager, Technical Publications
Otis Service Center
212 West Newberry Road
Bloomfield, CT 06002 USA

Copyright © 2001 Otis Elevator Company. All rights reserved.

Second Edition
Printed on Ikono Dull Satin Cream, 100 lb. text; 50% Recycled and 20% Post Consumer Waste.
Composition of this publication was performed on a Dell® Precision 420 computer, using the following software: Microsoft® Word (Version 7.0) for Windows, Adobe PageMaker® (Version 6.5), Adobe® Photoshop (Version 5.5) and Adobe Illustrator® (Version 7.0).

Printed in the United States of America
Printed by: W. E. Andrews Co. Inc.; Manchester, Connecticut
Production of the manual performed on a six color with power coder Mitsubishi 3FR Perfector 4c/2c press.

Cataloging in Publications Data:
Part No. MP-300
Master Index Control Number: 00

Owner's Information Manual

LOW-RISE

TABLE OF CONTENTS

Preface 4

How This Book is Organized 7

Chapter 1: About Otis Elevator 9

Chapter 2: Performance and Safety 25

Awareness 26

Duties 30

Commitment to Safety 32

Emergency Procedures 38

Chapter 3: Your Low-Rise Elevator 39

State of the Art Technology 40

Typical Sequence of Operation 46

The Operation of Your Low-Rise Elevator 48

Car and Hall Operating Fixtures 68

Low-Rise Elevator Model Characteristics 78

Chapter 4: Otis Maintenance and Service 87

Appendix A: Log Book 93

Appendix B: Replacement Parts Index 107

Appendix C: Instruction for Operating CD-Rom 129

Index: 133

Preface

Otis Elevator Company is an evolving company. As our products evolve, so do our supporting publications.

Otis personnel have access to the latest information in support of our maintenance practices. We continuously look for ways to improve our processes, not only in support of your equipment, but in the ways we deliver information throughout our company.

It is important to us to keep you, our customers, informed. One way is through Customer Booklet 300-1, which provides a brief explanation of the maintenance practices of Otis Elevator Company. For more information about obtaining this booklet, please contact your maintenance representative.

This Owner's Information Manual is accompanied by a CD-ROM containing this publication in its entirety. Instructions for operating the CD can be found in Appendix C.

Use of Warnings

It is essential that you realize your Otis elevator is a complex piece of machinery and **should be serviced only by a trained, authorized elevator mechanic.** Tampering with the equipment is hazardous to you, to the person performing maintenance, to the passengers, and may be detrimental to the elevator itself.

Some of the topics in this manual deal with the inherent dangers of elevator operation, whether electrical, mechanical, or otherwise. These are identified by warning symbols placed near the applicable paragraphs. Some of the potential dangers include electrical shock from high voltage, crushing hazards, and flammable or combustible materials. Additionally, other symbols are used to reflect important information. The symbols used in this manual are:

WARNING

RISK OF ELECTRICAL SHOCK

GEAR HAZZARD

CRUSH HAZZARD

COMBUSTIBLE

FLAMMABLE

NOTE

Please contact your nearest Otis office if you have any questions or require assistance with your elevator equipment.

Definitions

Note: The terms "lift" and "elevator" are used interchangeably throughout this document.

Competent Maintenance Person: A person operating on behalf of the maintenance company, with adequate training in theory and practice together with experience of the equipment being maintained, to enable a true assessment of its condition for continued safe operation.

Emergency: A situation in which persons require outside assistance.

Fault: A situation or operation in which operation of the lift for its intended use is restricted or impossible.

Handover of the Lift: The point in time at which the installer makes the lift available to the owner for the first time.

Installer: The natural or legal person who takes responsibility for the design, manufacture, installation, and placing on the market of the installation.

Maintenance Company: An organization using competent persons to carry out work of maintenance on behalf of the owner of the installation.

Maintenance Operations: Maintenance is all the necessary operation (lubrication, inspections, cleaning, etc.) to ensure the correct and safe functioning of the installation and its components after the completion of the installation.

Maintenance also includes:

a) Passenger rescue operations

b) The operations of setting and adjusting, including the operation that requires repair or changing of minor components that may occur due to wear or tear, which do not affect the characteristics of the installation

The following are not considered maintenance operations:

a) Changing of a major component such as the machine, car, control panel, etc., even if the characteristics of the new component are the same
b) Replacement of the installation
c) Modernization of the installation
d) Rescue operations carried out by emergency rescue personnel

Notified Body: An independent body with elevator experience, professional integrity, and technical competence, as defined by European Law.

Owner of the Lift: The natural or legal person who has the power of disposal of the installation and takes the responsibility for its operation and use.

Repair: Replacement or repair of defective and/or worn components.

Safety Components: Components that are defined as safety components by European Law.

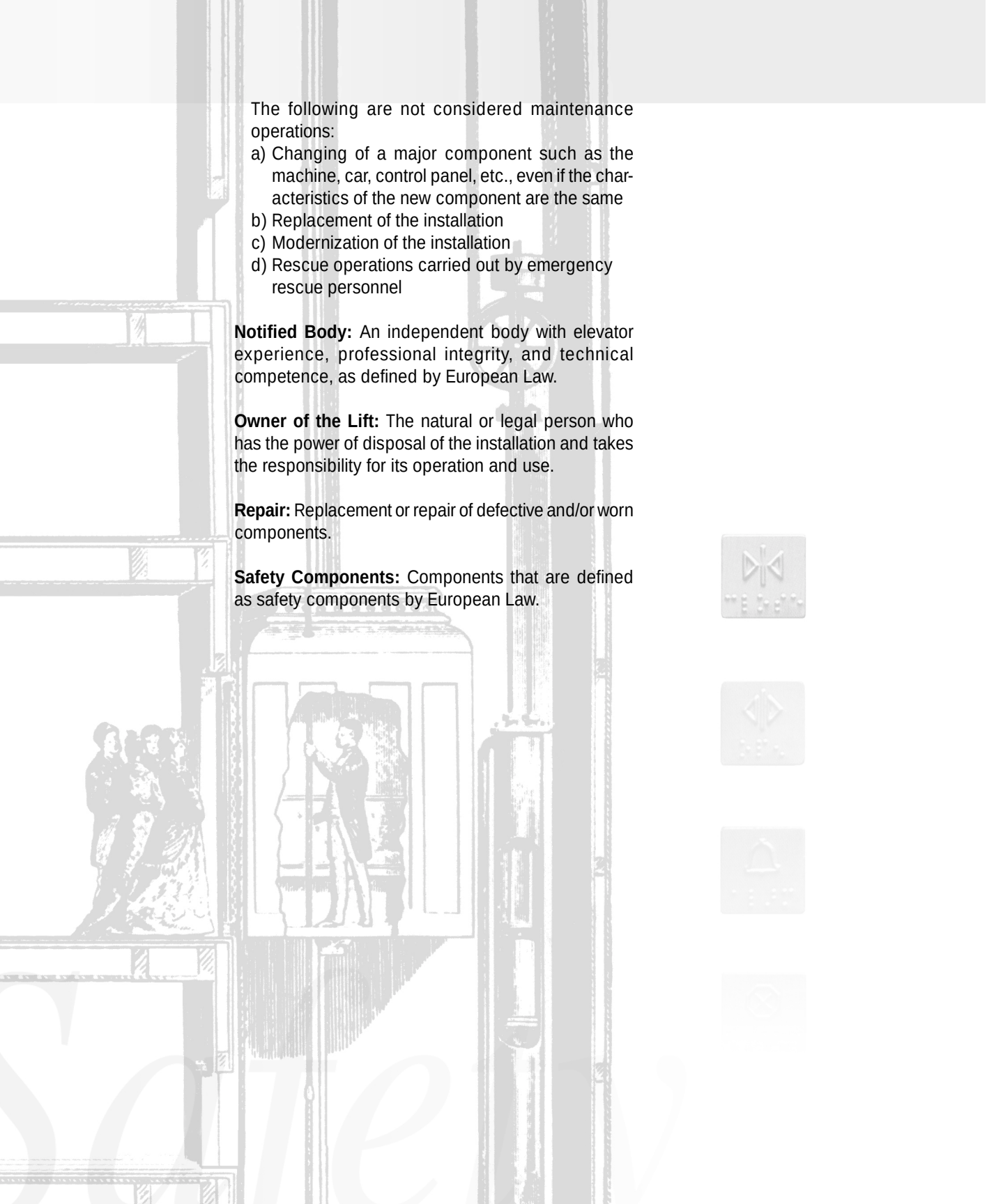

How This Book is Organized

This Owner's Information Manual is divided into four chapters. The first chapter gives a brief history of Otis Elevator Company.

Chapter 2 is designed to make elevator owners more aware of their responsibilities, including passenger safety, code requirements, and emergency procedures. It also explains how Otis emphasizes safety in its everyday operations.

Information about how your Low-Rise elevator works, a description of its major components, and details about a specific model can be found in Chapter 3.

The final chapter contains information about Otis' service, maintenance, and modernization programs.

Chapter 1: About Otis Elevator

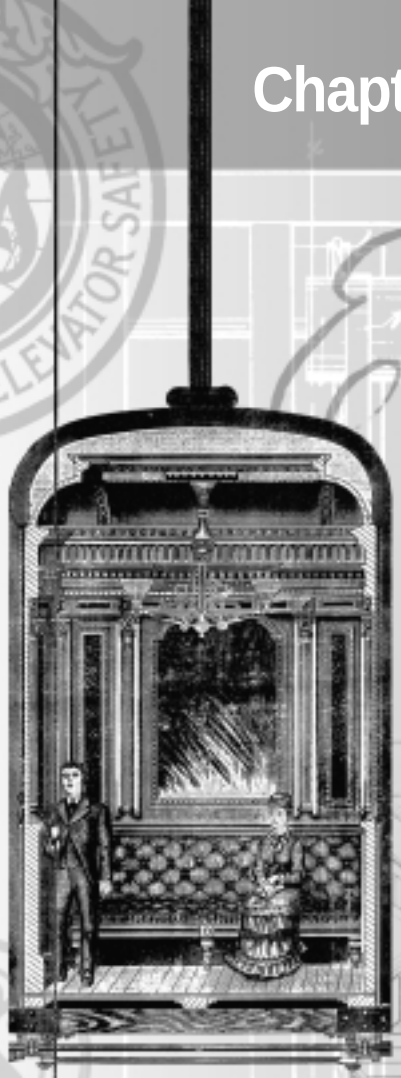

Chapter 1: About Otis Elevator

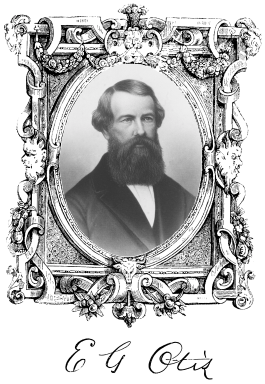

Otis Elevator Company has a long and interesting history that began in the mid-19th century with its founder, Elisha Graves Otis.

In 1852, while employed by the Yonkers Bedstead Manufacturing Company in Yonkers, New York, Otis built a hoisting machine with a safety mechanism that prevented the platform from falling if the hoisting rope broke. The following year, he opened his own shop in Yonkers, called Union Elevator Works.

It was at the 1854 New York World's Fair — also known as the Exhibition of the Industry of All Nations — that Otis introduced his first safety hoist to the public. His demonstration of riding up and down on the platform and cutting the hoisting rope without plummeting to the ground attracted huge crowds. The event became famous and the safety hoist's debut was a resounding success.

Elevators during the 1850s were used to hoist freight, and Otis and his sons sold their product on the existing market as a hoist. He also realized the safety mechanism made it possible to safely carry passengers, thus potentially opening up a whole new market.

The next problem to overcome was development of a power source to run passenger elevators. Factories and warehouses with freight elevators were near water, but

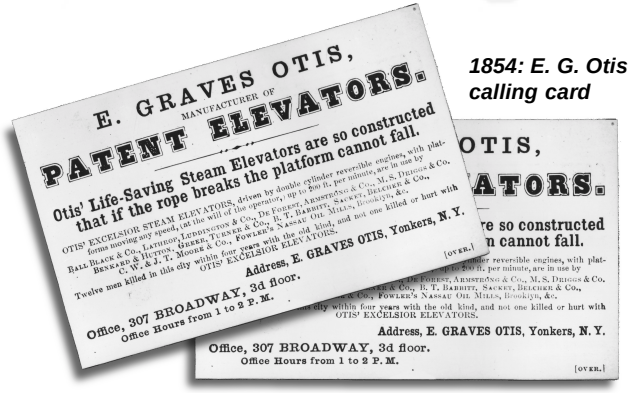

1854: E. G. Otis calling card

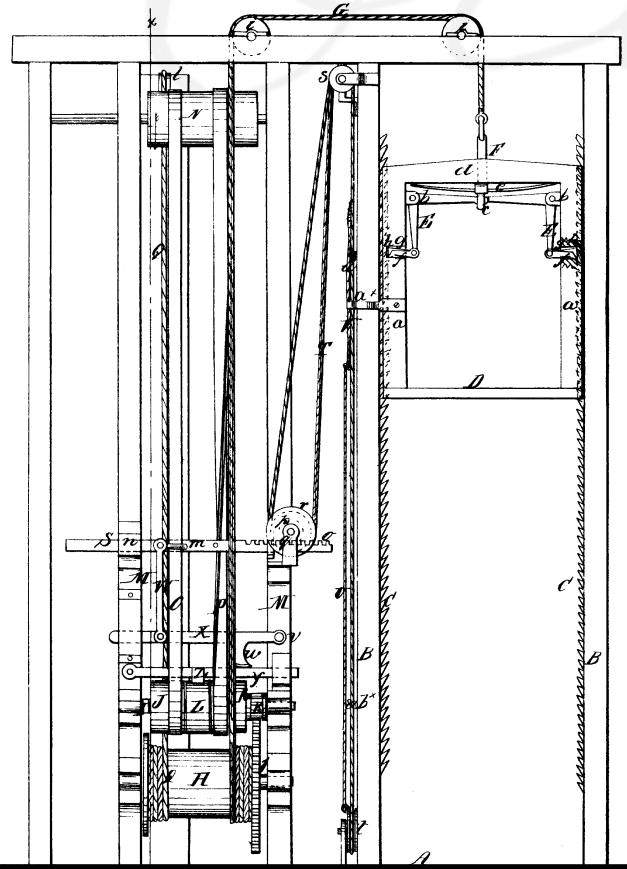

1852: hoisting machine

1852: oscillating steam engine

1852: railroad brake

1853: Elisha Otis opens Union Elevator Works

1854: safety hoist

1857: steam plow

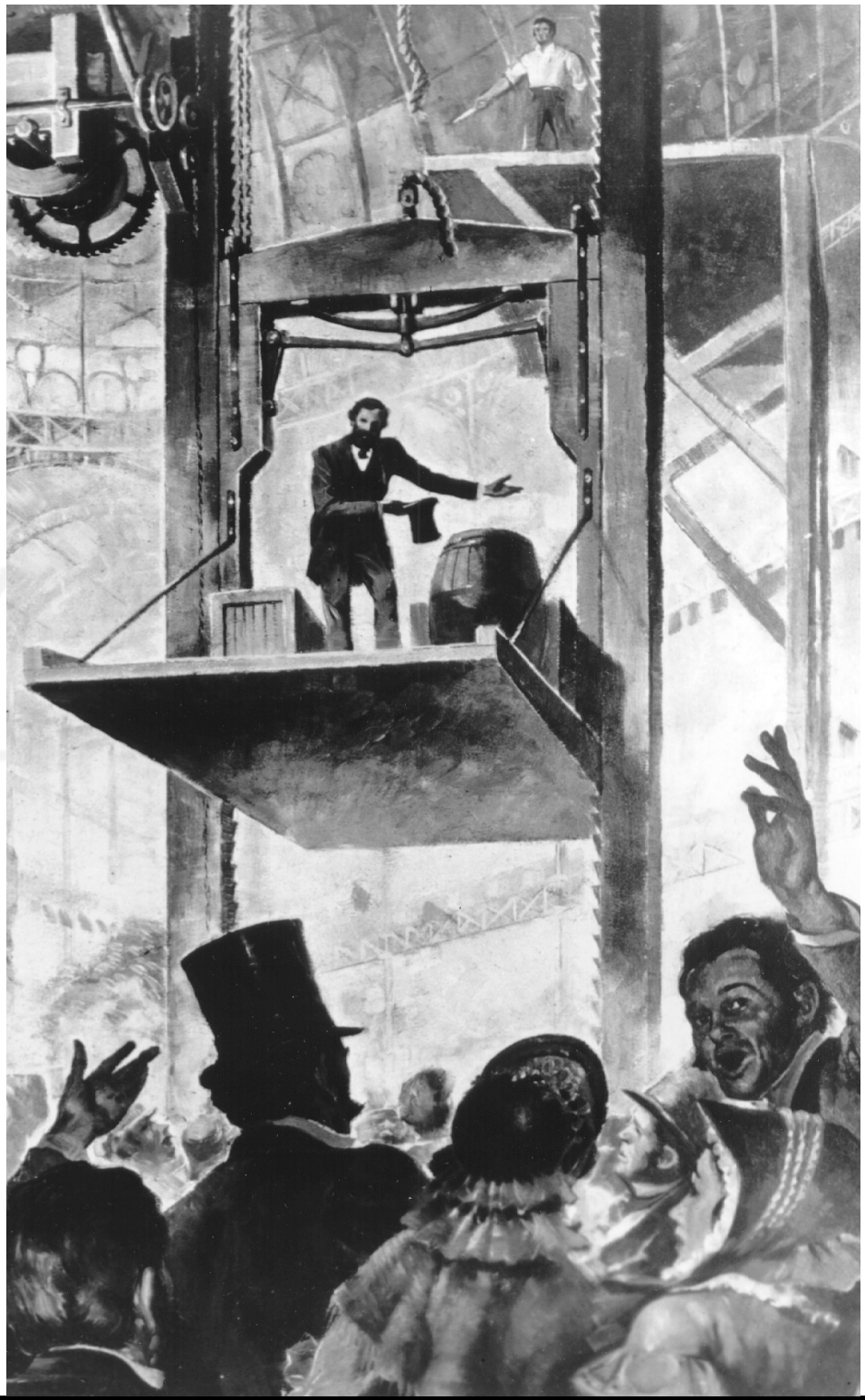

1857: safety passenger elevator

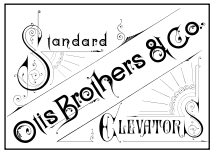

Otis logo - 1880

1854: Safety Hoist Elevator at the Crystal Palace, New York World's Fair.

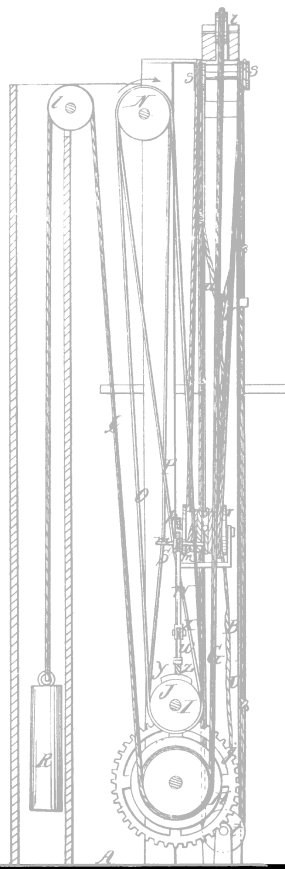

1857: The first passenger elevator ever built was installed in the E.V. Haughwout Store in New York City.

passenger elevators would be installed in stores, office buildings, and hotels, away from any central power source (this was 22 years before the opening of the first U.S. electric power station).

Otis' solution was to invent a small, oscillating steam engine to power each elevator. So in 1857, he designed, built, and installed the *first Otis safety passenger elevator*, in a New York City department store.

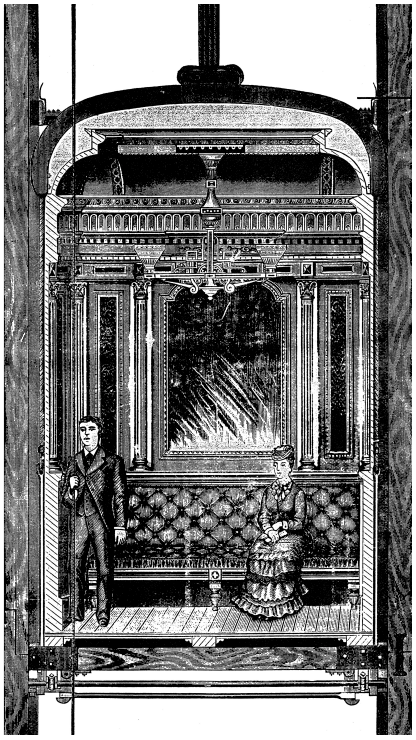

1873: The elevator operator manipulates the control rope, regulating the direction and speed of the car.

Elisha Otis was a master mechanic and engineer. He obtained many patents in the 1850s, including the safety device he invented in 1852, the oscillating steam engine, a brake, steam plows, and a rotary oven for bakeries.

Unfortunately, at the young age of 50, Otis died suddenly during a dyptheria epidemic in 1861. His sons, Charles and Norton, took over the business and utilized the elevator expertise their father taught them. They renamed the company N.P. Otis & Brother, then in the late 1860s changed it to Otis Brothers & Company.

Otis Brothers & Co. patented some 53 new advancements in elevator equipment, including hoisting apparatus, brakes, steam hoists, and pulleys. The brothers continued to use world's fairs and industrial fairs to showcase their elevator technology and create an international market for Otis elevators.

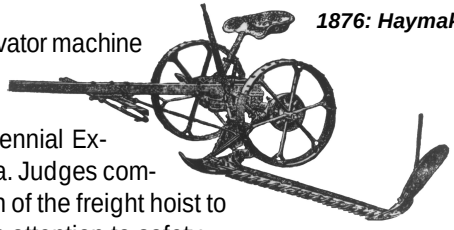

1876: Haymaker

An Otis two-cylinder steam elevator machine and platform were exhibited at the second world's fair to be held in the U.S., the Centennial Exposition of 1876 in Philadelphia. Judges commended Otis for its adaptation of the freight hoist to passenger elevator and for its attention to safety.

1858: rotary ovens

1861: Elisha dies

1867: renamed N.P. Otis & Brother

1876: haymaker

1876: two-cylinder steam elevator

Otis elevators were prominently displayed in 1889 at the Universal Exposition in Paris. The French government built the Eiffel Tower specifically for that world's fair and wanted an all-French monument to represent the country's construction and technological expertise. But no French company could overcome the structural demands of putting elevators inside the tower's curved legs. Otis Elevator successfully installed its elevators, giving the company a chance to display its product at the fair's centerpiece attraction.

Otis logo - 1905

Post-Civil War era use of structural steel made it possible to construct taller buildings. Otis technology kept up with the construction pace during this "Era of the Skyscraper."

Otis opened offices in England, France, Canada, Germany, and Belgium, and had sales agents representing the company throughout the world. Its most famous elevator installations included the Eiffel Tower, London Underground, and three elevators for Russian Emperor Nicholas II's private quarters in the Kremlin.

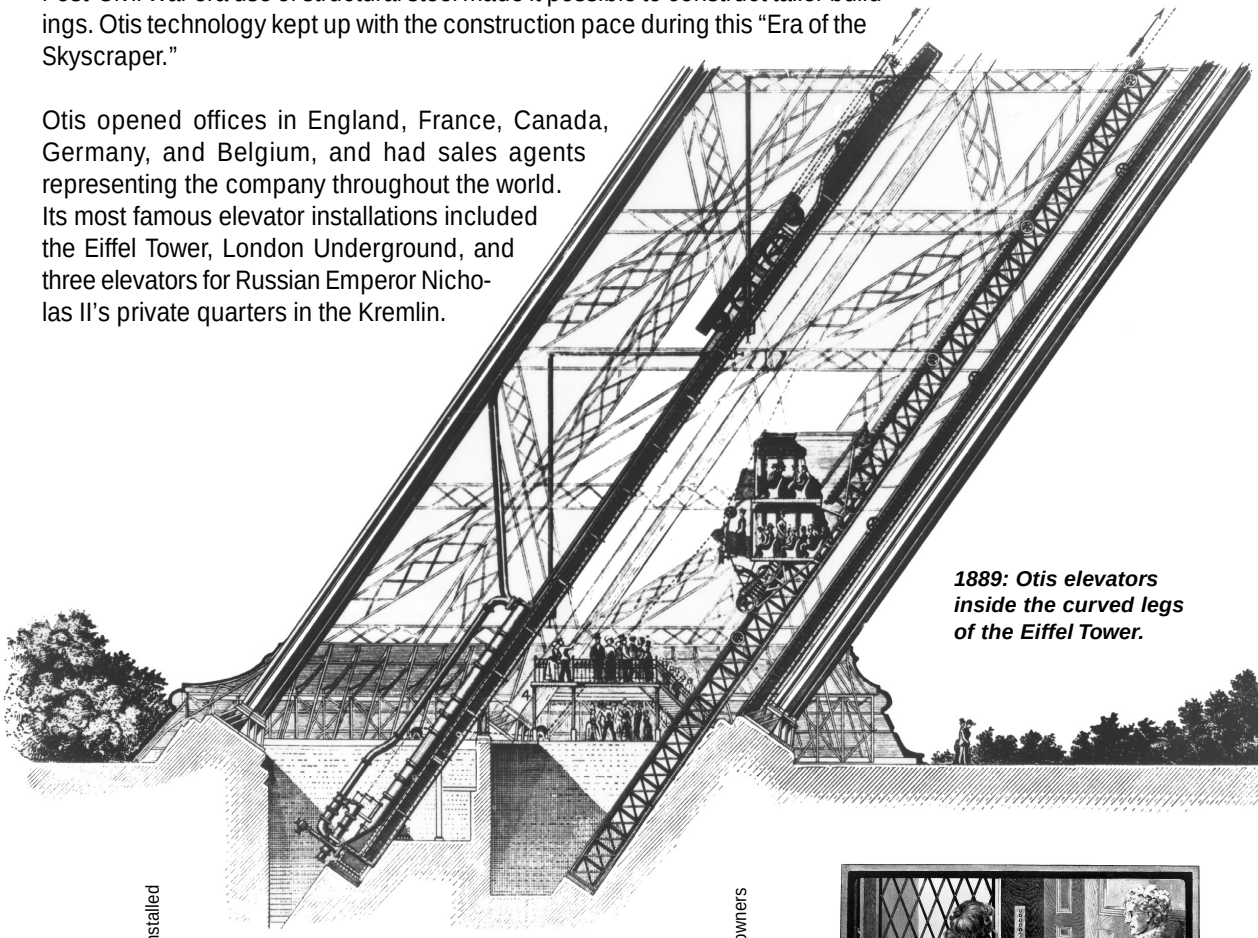

1889: Otis elevators inside the curved legs of the Eiffel Tower.

1889: Eiffel Tower elevators installed

1890: elevators sold to homeowners

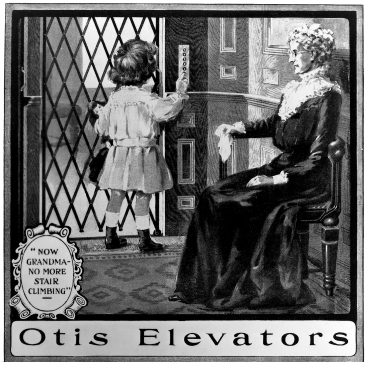

1920: Freight incline

Modern-day Otis came into being during the late 1800s and the early 1900s, a time when "big business" flourished. Otis Brothers & Co. merged in 1898 with several U.S. elevator companies in Boston, Chicago, and Philadelphia, to become Otis Elevator Company. Forty more, small, independent elevator companies were acquired during the period prior to World War I.

The company expanded its product lineby aquiring the patents for modern escalator technology from Charles D. Seeberger and Jesse W. Reno. The world's leading elevator manufacturer unveiled its new "escalator" (a term trademarked and owned by Otis for 50 years) at the Paris World's Fair of 1900.

In 1903, Otis introduced what would become the "backbone" of the elevator industry, the gearless traction electric elevator. These could be used in buildings of any height and operated at greater speeds than steam elevators.

As skyscrapers got taller and taller, more Otis elevators were installed, particularly in New York City. For example, the 20-story Flatiron building was built in 1902 and had six Otis elevators. In 1912, the Woolworth building rose to 60 floors and was equipped with 26 elevators.

Skyscrapers reached a new pinnacle in 1931 when the world's tallest building—the Empire State Building— opened, serviced by 67 Otis elevators.

More tall buildings meant more elevators and a greater need to keep them in good running condition.

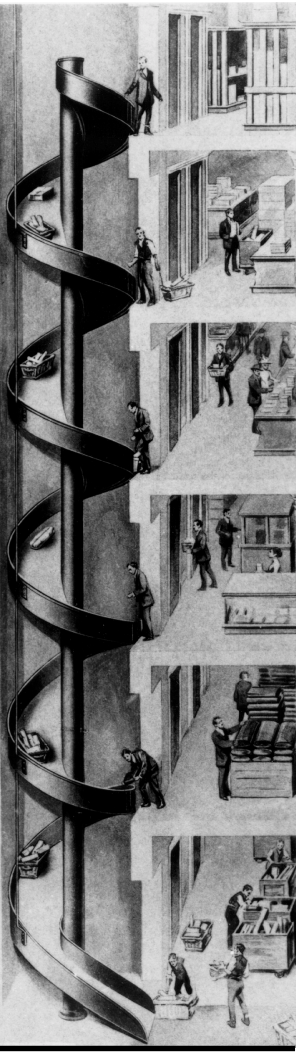

1900: Gravity conveyers

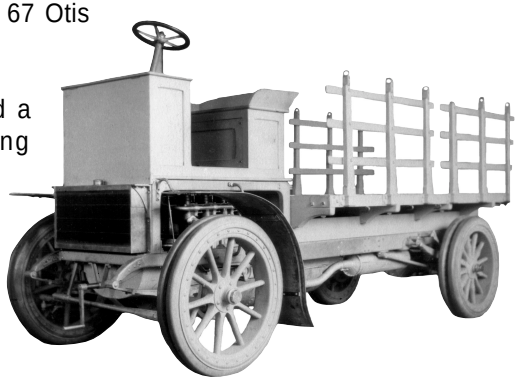

1909: Sultan truck

1898: merged to become Otis Elevator Company

1900: gravity conveyors

1900: "escalator" unveiled

1902: hydraulic elevators installed in Flatiron building

1903: gearless traction electric elevator

1909: Sultan automobile

1912: gearless traction machines installed in Woolworth building

1920: passenger and freight inclines

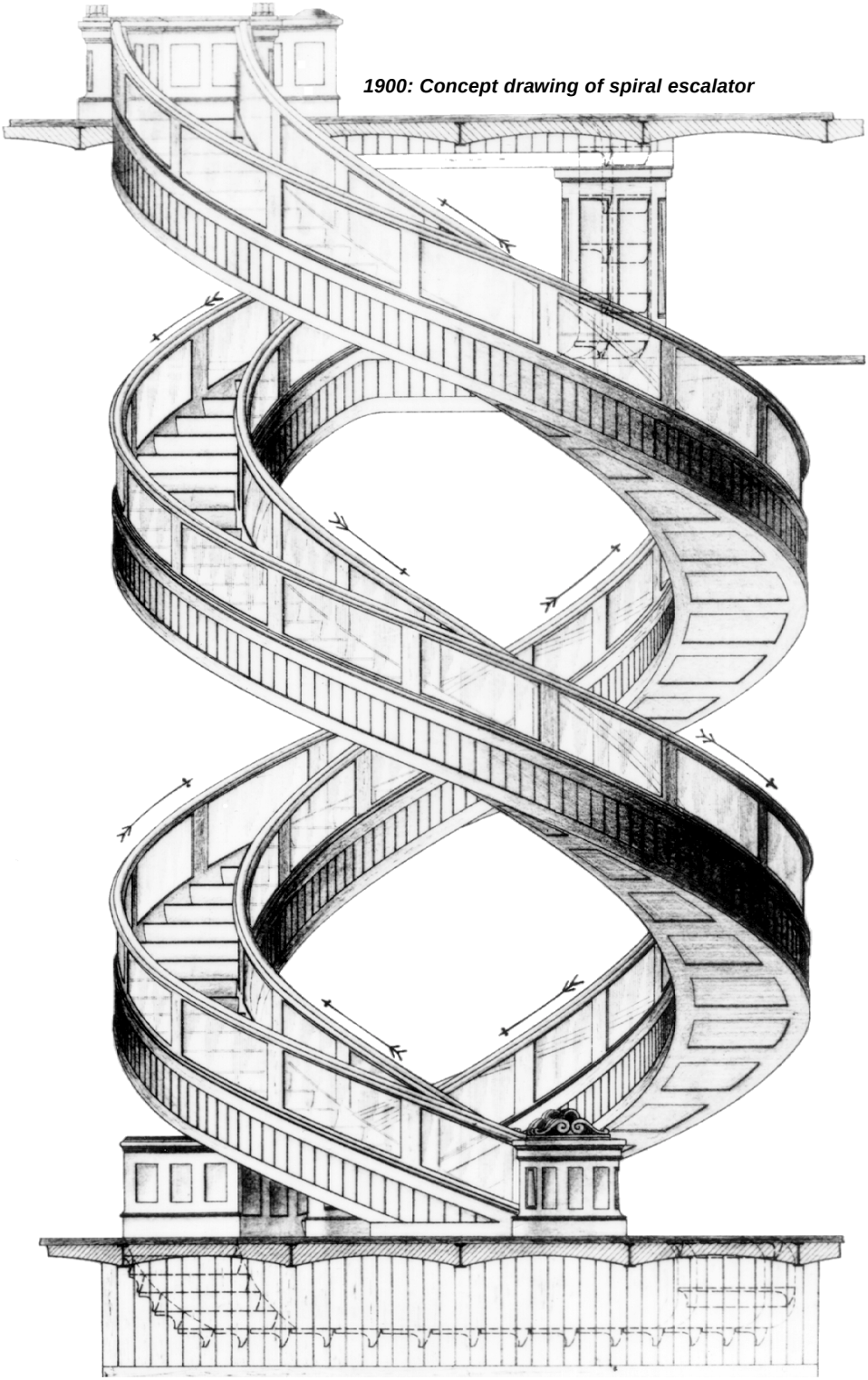

1900: Concept drawing of spiral escalator

Otis logo - 1912

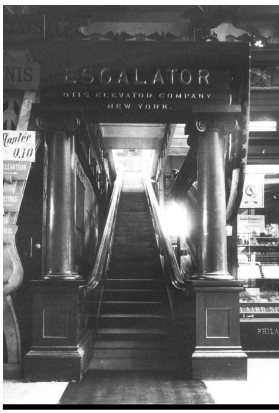

1900: New escalator, Paris World's Fair

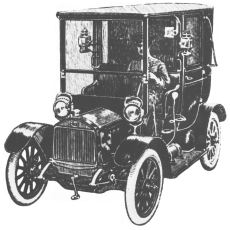

1909: Sultan automobile

1921: Preventive maintenance

Otis recognized this and in 1921 introduced the first preventive maintenance service. Today, maintenance represents fifty percent of Otis' overall business.

From its early days under Elisha Otis until the late 1960s, Otis Elevator explored many different product lines outside its core businesses of elevators and escalators: the rotary oven for bakeries in the 1850s, a haymaker in the 1870s, gravity conveyors around 1900, the Sultan automobile from 1909–1912, and passenger and freight inclines in the 1920s–1930s.

Otis converted to military production during World War I, World War II, and the Korean War. It manufactured crank cases for fighter planes, anti-aircraft guns, ammunition hoists, gun recoil mechanisms, depth charge throwers, and airplane elevators for aircraft carriers.

1950: The first autotronic (without attendant) elevator system was installed in the Atlantic Refining building in Dallas.

The wars disrupted normal production, but they also changed Otis' business. Automatic elevators were sold to homeowners since the 1890s, while most public buildings continued to use elevator operators to run elevators well into the 1940s. But labor shortages in World War II brought the need for automation in public elevators to the forefront. So, in 1950 the first group of Otis automatic elevators was installed in Texas.

1954: Otis factory workers assembling cable on a leg board.

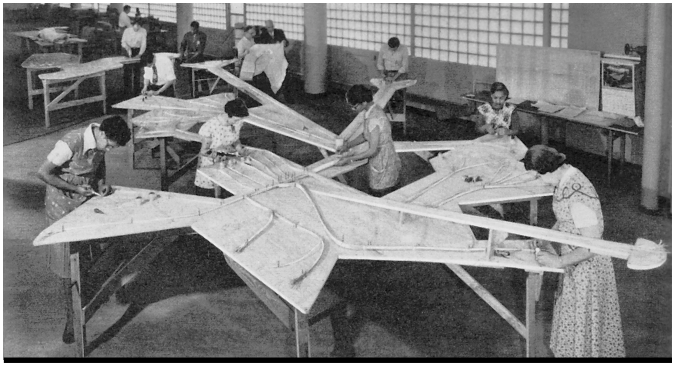

1921: preventive maintenance service introduced

1924: first signal control elevator

1931: elevators installed in Empire State building

1941: military production during WWII

1950: automatic elevators

1950: military electronics

1950: material handling equipment

Following the Korean War, Otis continued to diversify its product line, producing military electronics, material handling equipment, and automatic bowling pinsetters. One of its more unique operations was the manufacture of electric buses, vans, and golf carts.

1928: Advertisement shows the Standard Oil building where the first signal control elevators were installed in 1924.

Otis logo - 1913

1924: The first signal control elevator was installed in the Standard Oil building in New York City. The operator pressed floor buttons and closed the car doors.

By the late 1960s and early 1970s, Otis officials chose to concentrate on the core elevator and escalator business and divested the company's other holdings.

The Otis Elevator Company was purchased and became a subsidiary of United Technologies Corporation in 1975. It became a wholly-owned subsidiary in 1976.

1955: One of the first automatic pinsetting machines built

One of the most significant developments in elevator technology was the advancement of microprocessor control - the use of computer chips to make elevator control decisions. Prior to this event elevators relied on large collections of relays and switches. These relay based systems required a lot of maintenance and because of the large size, took up significant space.

In the early 1980's, Otis developed the first microprocessor control elevator system called the Elevonic 101. It was a watershed event and paved the way for future developments utilizing computer technology.

1969: Electric cart

1969: Electric golf cart

1955: automatic bowling pinsetters

1969: electric buses, vans, and golf carts

1975: subsidiary of United Technologies Corporation

1976: wholly-owned subsidiary

1985: Remote Elevator Monitoring (REM®)

Advances in microprocessor and data communications technology led to Otis' first Remote Elevator Monitoring (REM®) system, which was introduced in 1985 and installed at an Otis elevator site in the United Kingdom.

REM® systems monitor elevators 24 hours a day and provide diagnostic information that may help prevent costly shutdowns.

Otis logo - 1914

1985: Remote Elevator Monitoring (REM®) systems monitor elevators 24 hours a day.

1969: Electric bus

Another important technological advance—the Elevonic® 411 software-based control system—was released by Otis in 1990. These sophisticated Elevonic® systems made "real-time" dispatching rules based on changing traffic conditions in a building. They also managed elevator ride quality, energy consumption, motor performance, and all the in-car information displays.

Today, Otis is recognized as the elevator industry leader with a 23 percent share of the world elevator new equipment market and servicing more than 1.2 million elevators and escalators worldwide. It is a $6 billion (U.S. dollars) company with 60,000 employees and 28 major manufacturing facilities in 17 countries.

1989: Linear induction motor shuttle

1989: Linear Induction Motor Shuttles

1990: Elevonic® 411

Elevonic® hall position indicator

1990: Elevonic® hall button

Elevonic® information display system

Some other Otis products:

- TRAV-O-LATOR® moving walkways for expansive facilities such as airport terminals and shopping centers.
- Linear Induction Motor Shuttles — short-haul horizontal transportation systems for urban centers, airports, hospitals, resorts, and senior citizen complexes.

1996: TRAV-O-LATOR®

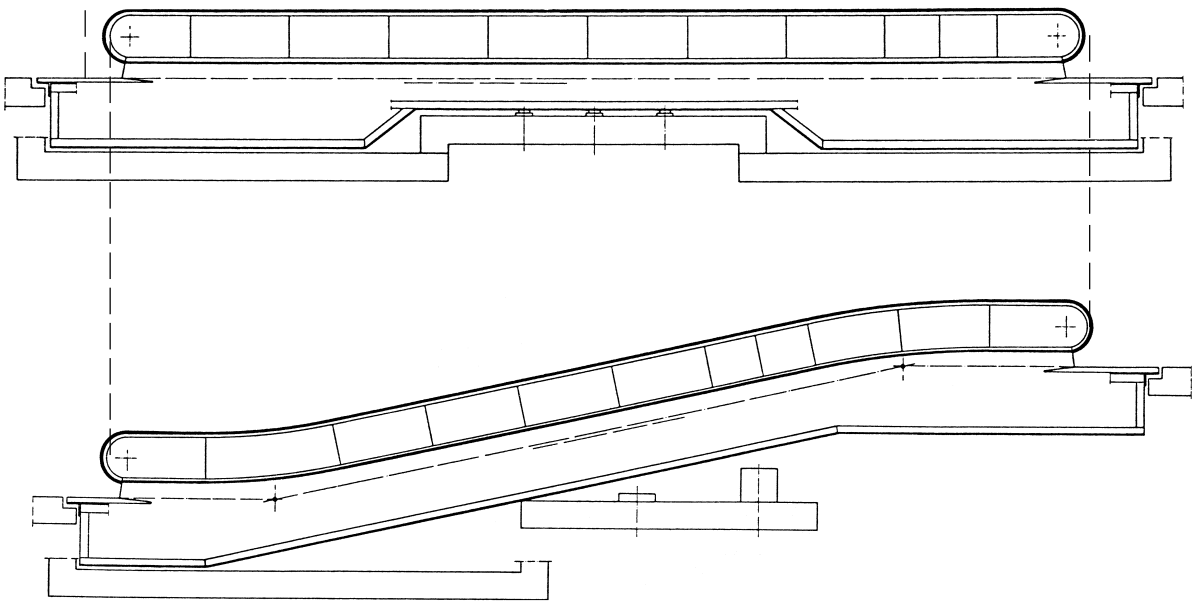

Otis logo - 1917

Otis logo - 1918

Otis logo - 1927

1996: TRAV-O-LATOR®

1

Otis is focused on advanced technology that will improve its operations and products in three key areas: quality, efficiency, and safety. For example:

Otis dispatching technology improves service dramatically by analyzing and adapting to a building's traffic pattern, then assigning elevators to respond to variations in passenger traffic within the building. This is critical to an integrated building transit system because traffic patterns in the buildings of the future will be more complex than in today's buildings.

Otis engineers are also designing sophisticated remote elevator monitoring systems. The more closely an elevator is monitored, the easier it can be maintained with fewer costly shutdowns.

Otis logo - 1948

Otis logo - 1970

Otis logo - 1974

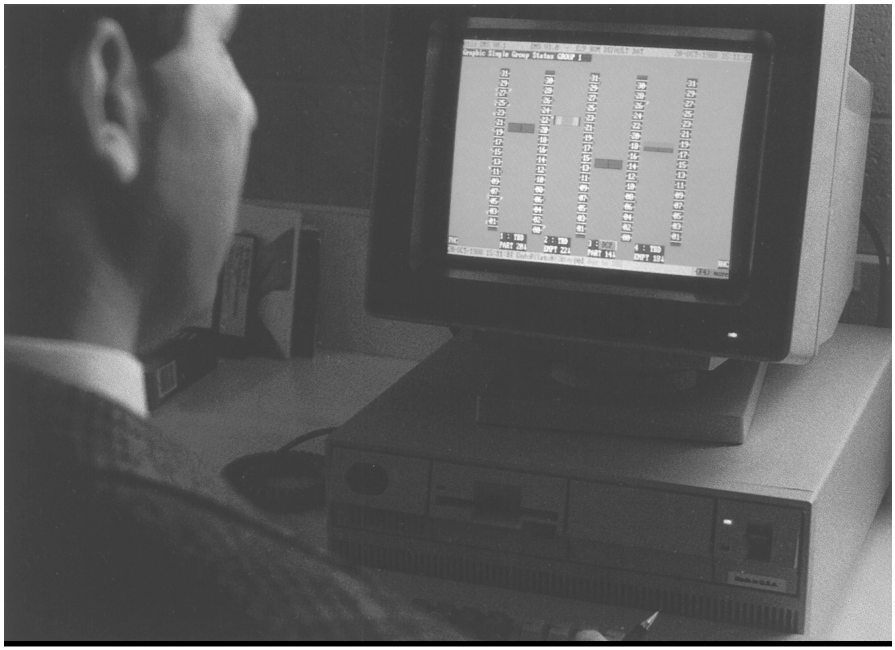

Elevator monitoring systems provide comprehensive information about elevator condition, status, and performance.

2000: Gen2™ Elevator System

2000: e*Display System

Otis' latest achievement is Gen2™, the first major breakthrough in elevator lifting technology in nearly 150 years. Gen2™, an elevator system for low- and mid-rise buildings, is the first to use flat, coated steel belts to lift the elevator cars. The belts are 30 mm (1 in.) wide and 3 mm (1/10 in.) thick, quieter, lighter, easily bend around a 100 mm (4 in.) diameter sheave, and last two to three times longer than traditional steel ropes. That means the Gen2™ system requires a machine one-quarter the size of a traditional machine, eliminating the need for a separate machine room.

The e*Display system is another innovative Otis product that offers customers leading-edge technology. This full-color, flat-panel screen is located inside the elevator car to provide passengers with internet-based information, including news, weather, local traffic, and financial market information.

UNITED TECHNOLOGIES OTIS ELEVATOR

Otis logo – 1981-1993

Otis
A United Technologies Company

Otis logo - present

Chapter 2: Performance and Safety

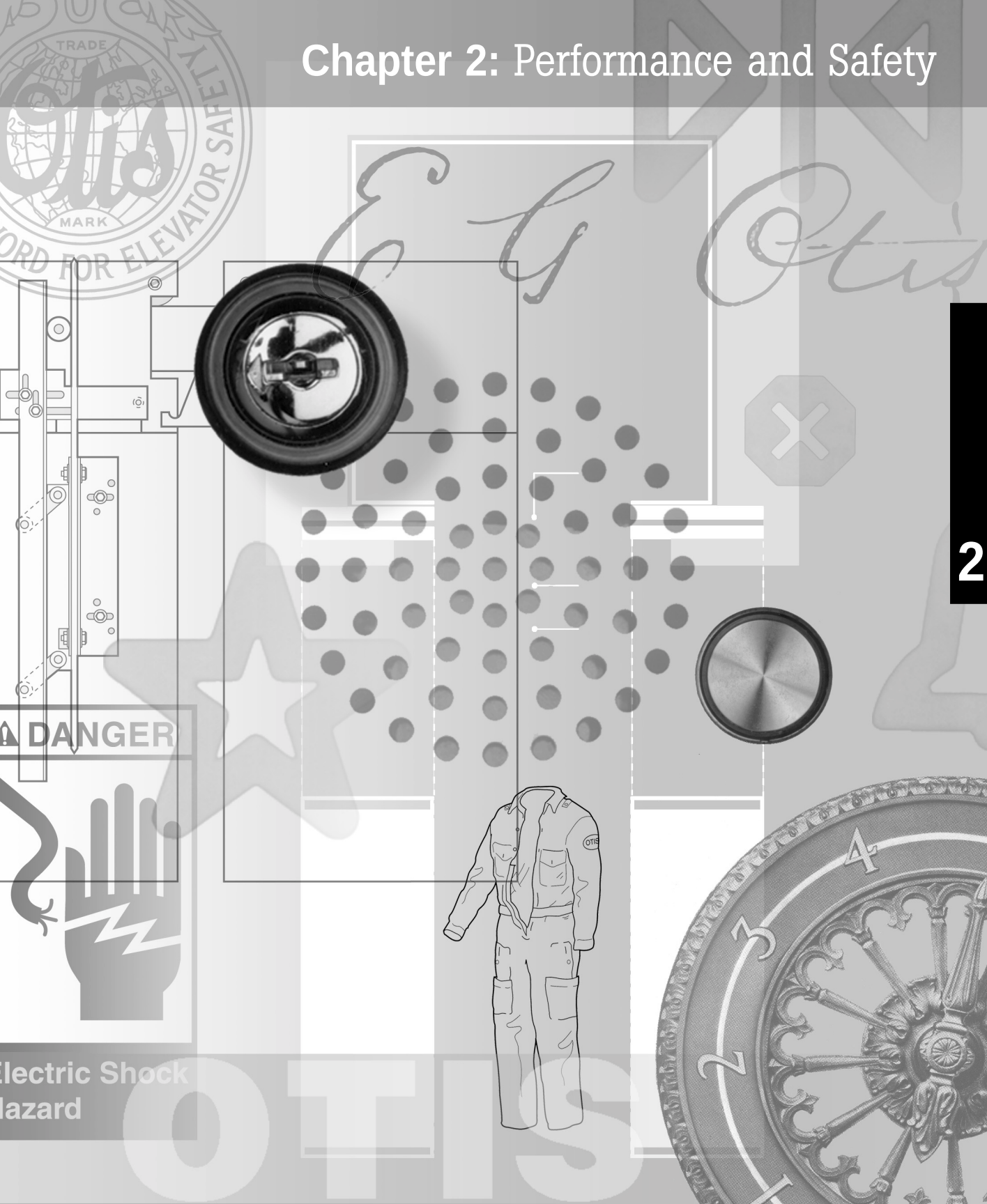

If anything improper is discovered, corrective action must be taken immediately. Do not attempt to repair the equipment. For safety reasons, only a trained, authorized elevator mechanic should service the elevator.

Knowing what to look for is probably the most important aspect of elevator awareness. When you know how to spot issues in performance, you can influence the efficiency of your equipment by taking care of issues before they become problems. The following information suggests ways you can look after your investment and help keep it running at optimum performance. More information about general maintenance procedures can be found in Chapter 3, page 98.

Awareness

You or a member of your building staff should go through the following procedures regularly with each elevator car:

1. **Test the operations and safety devices.**
   Test alarm bells, stop switches, intercoms, telephone connections, and emergency lighting systems to make sure they will work in an emergency.

2. **Ride the elevators.**
   Ride the elevator and pay attention to the smoothness of starting and stopping, to any unusual sounds (such as squeaks or scrapes), and to any unusual movements, vibrations, or odors. Close your eyes to increase awareness of irregularities.

3. **Listen during rush hours.**
   Stand in the lobby during peak traffic periods listening to passengers' comments.

You should be aware of several things in order to prevent equipment failure and/or potential hazards. The following nine-point Safety and Performance Checklist can be applied on a regular basis to most elevator systems.

Safe·ty/Sāfte; The condition of being safe: freedom from exposure to danger: exemption from injury, or loss.

Emergency Lighting/Alarm Bell system provides passenger reassurance in emergencies.

✔ **How long must passengers wait for an elevator at the lobby?**
Well-timed arrivals and departures, as well as proper acceleration and deceleration, are critical to fast, efficient service.

✔ **Do the passengers have enough time to enter and exit before the doors close?**
There are a number of variables that determine the door open cycle. The minimum time could depend on the number of elevators in the bay and on the distance from a point in the center of the lobby to each elevator. Time could also be measured from notification that a car is arriving by a lantern and audible signal. Times can also be longer for elevators that service elderly or disabled persons.

✔ **If the elevator is equipped with electronic detectors or light ray devices, do the doors reverse direction without touching passengers?**
These devices enable a closing door to reverse direction without touching passengers. Reversal must take place as soon as the doors near the passenger (if an electronic detector is in use) or as soon as the light ray beam is broken. In order to conform to standards, the door should also remain either partially or fully open until the obstruction is removed from the beam.

Electronic detectors enable a closing door to reverse direction without touching passengers.

✔ **If the doors are equipped with a rubber safety shoe, do they reverse direction as soon as the shoe makes contact with a passenger?**

The main function of rubber safety shoes is to initiate a door reversal if the shoe makes contact with a passenger or object while the door is closing. The shoe is a vertical edge that is flush with the elevator car doors when they are fully open, and extends out 5.08 cm - 7.62 cm (two or three inches) as the doors close.

When a passenger pushes in the shoe, an electrical switch automatically energizes a door reversal relay. Pressing the shoe gives passengers the option of holding the door open, much like the "Door Open" button located inside the elevator car.

The shoe mechanism should operate as soon as the rubber makes contact with an obstruction, causing the closing door to immediately reverse direction and open completely. Failure to reverse direction, or to remain open as long as contact with the rubber shoe is maintained, constitutes a safety hazard.

Stop switch

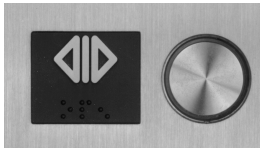

Door open button

✔ **Does the car stop level with the hall floor?**

Leveling is the process of the elevator platform attaining a stop position that is even with the landing. The car should stop within 13 mm (one-half inch) of the hall floor, and leveling should be consistent whether the car is full or empty.

Leveling should stop within 13 mm (one-half inch) of the hall floor.

✔ **Is the alarm bell in working order?** *(USA only)*
The alarm bell should be tested once a week by pressing the alarm button on the car operating panel. This quick and simple procedure insures that the bell will work when and if it is needed.

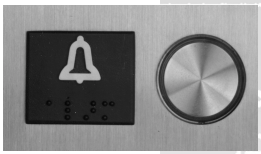

Alarm bell

✔ **Does the alarm bell function with the stop switches?** *(USA only)*
The alarm bell will ring when the stop switch is flipped. The bell not only alerts building personnel to an emergency, but often frightens a potential criminal into fleeing the premises before accomplishing any misdeed.

✔ **If the cabs have an intercom or telephone connection, is it in working order?**
Intercoms and telephones should be tested regularly. Passengers can be spared inconvenience when minor mechanical difficulties occur by following instructions received over the intercom or telephone. During an emergency, communication with passengers helps to alleviate or avert panic. At these times, information from passengers can be of great assistance to emergency personnel.

Stop switch

✔ **Is the interior of the elevator adequately lit?**
Check that all light switches are on, all lamps lit, and all light diffusers are clean to permit maximum transmission of light.

Intercom connection

Otis HANDSOFF® phone enables passengers to call for help.

Duties

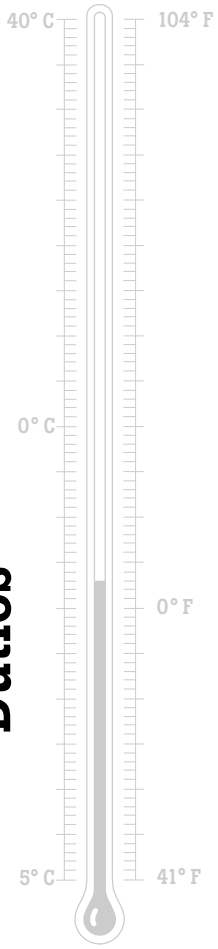

Only use the elevator for the purposes for which it was designed and purchased. The elevator has been designed to transport passengers and goods within a building, carrying loads up to the maximum weight indicated inside the elevator car, running at the specified speed for a rated traffic condition. Overloading will result in visual and/or audible signals in the car and further movements will be prevented until the overload condition has disappeared.

It is extremely important that planned maintenance be recorded with a reputable maintenance company. Maintenance is necessary to ensure the safe and correct operation of the equipment. Inspections of the equipment should be carried out in accordance with local regulations. Any irregularities in the operation or performance of the elevator should be reported to the elevator maintenance company immediately. Any alterations or changes to the building that may impact the elevator should also be discussed with the maintenance company.

The machine room and access areas for servicing the elevator equipment should remain clean and free of debris at all times. For proper operation, the machine room temperature must be between 5° C and 40° C, which equates to 41° F and 104° F. Areas subject to excessive heat should have proper ventilation.

The elevator's two-way voice communication system must be kept in good working order at all times. This includes the communication line between the car and a rescue service.

The elevator owner must keep this Owner's Information Manual in good condition and up-to-date, especially after an important modification or after an accident. The Owner's Information Manual must be stored in a safe place and kept available for use by the authorized persons at all times. It is the elevator owner's responsibility to update all the pertinent information contained in the Log Book, which is located in Appendix A of this manual.

The elevator owner must keep the Owner's Information Manual in good condition and up-to-date, especially after a modification.

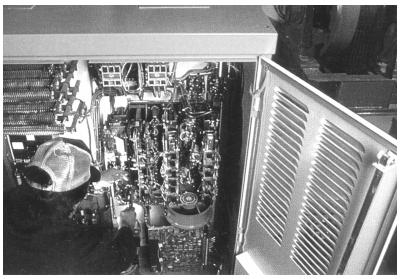

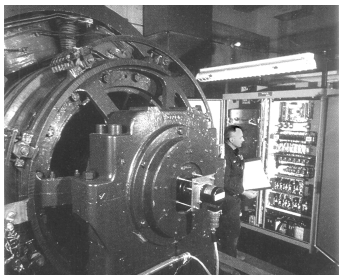

Maintenance is necessary to ensure the safe and correct operation of the equipment.

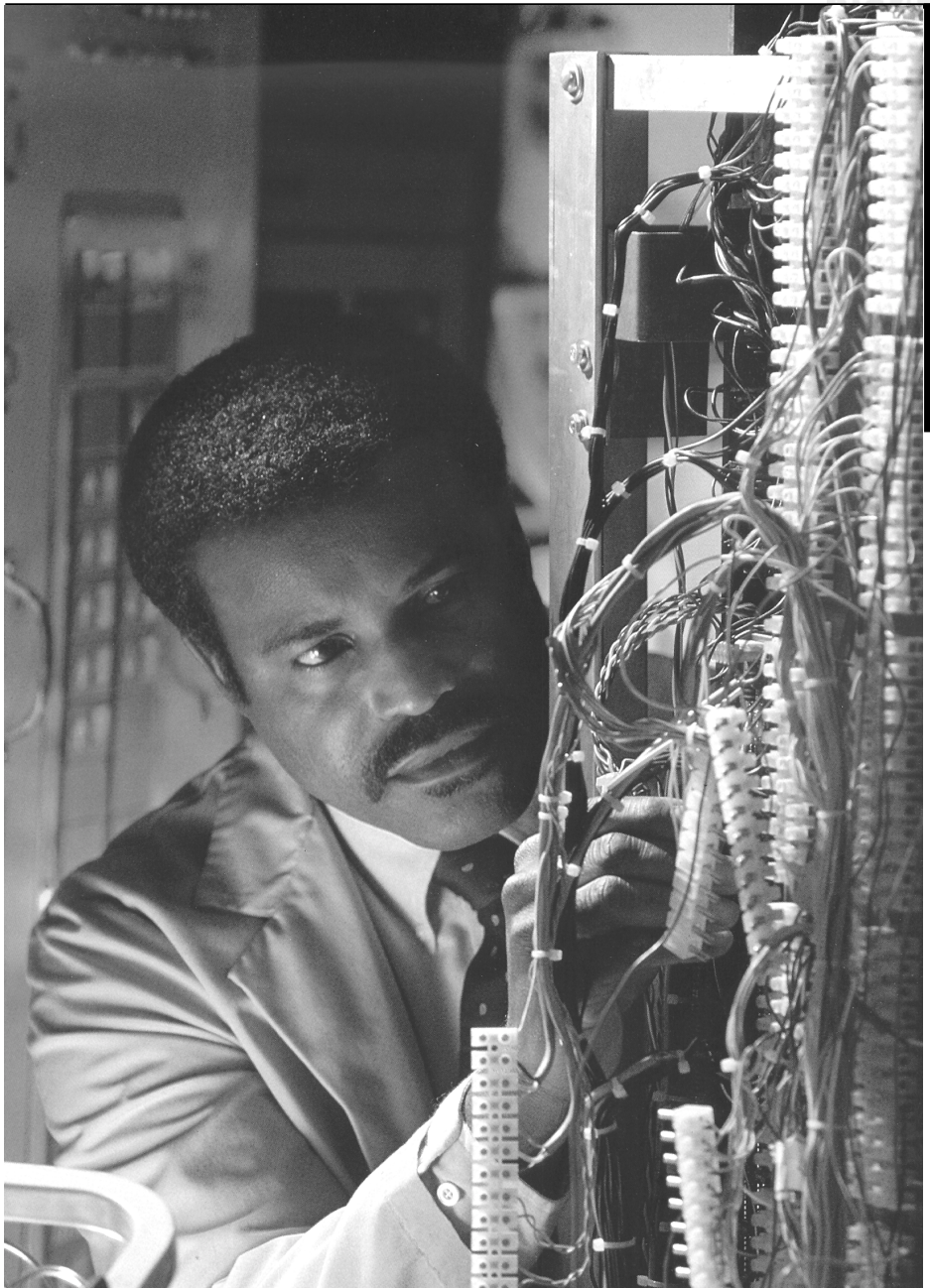

Otis personnel carefully test equipment in a controlled environment to satisfy strict performance and safety requirements.

Commitment to Safety

"Safety First" is more than just Otis' slogan. The safety of employees, customers, and the general public is the overriding priority in every aspect of the company's worldwide operations. Safety is engineered into every product we develop and manufacture. In fact, elevator systems are designed with sophisticated electronic safety measures from top to bottom. There are also redundant measures in place just in case one or more of the electronic devices fails.

Elevators move more people in one day than any other form of transportation, including automobiles. And like the automobile, safety is an overriding concern in the design and operation of any elevator system. Otis uses a number of methods to protect passengers. One of the most important is the elevator safety chain. The safety chain is actually a series of switches located in the hoistway, pit, elevator car, and top of the elevator. It is called a chain because the switches are electrically connected one after the other in series. This forms an electrical circuit designed to prevent the elevator from running in an unsafe condition if one of the switches is not set properly. Any switch not in safe operating condition causes the chain to break and prevents power from being applied.

Safety is our number one concern and will always be a major focus of our business. Over the years, Otis has used the latest technology to make existing products safer. The following items are presented as a sample of just some of the products Otis has developed to make elevators as safe as possible.

The **MECHANICAL DOOR RESTRICTOR** is an example of a safety product developed by Otis for use in North America. It keeps doors locked if an elevator stops between floors, protecting passengers from serious injury should they attempt to pry open the doors and evacuate.

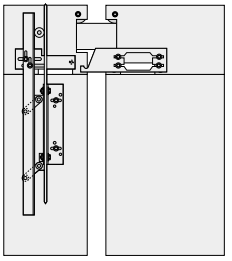

Door restrictor open

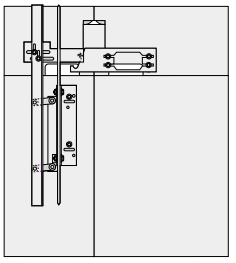

Door restrictor closed

LAMBDA® is an entrance protection system incorporating infrared emitters and detectors to create an invisible, three-dimensional safety net that senses passengers in front of or crossing the elevator entrance. Its microprocessor scans continuously, opening the elevator doors instantly if it senses an interruption of the infrared beams.

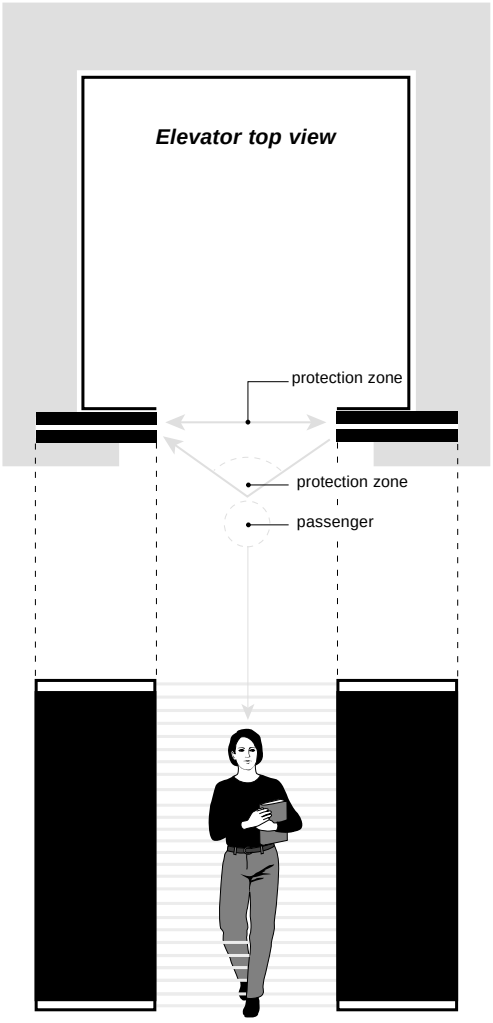

Elevator side view

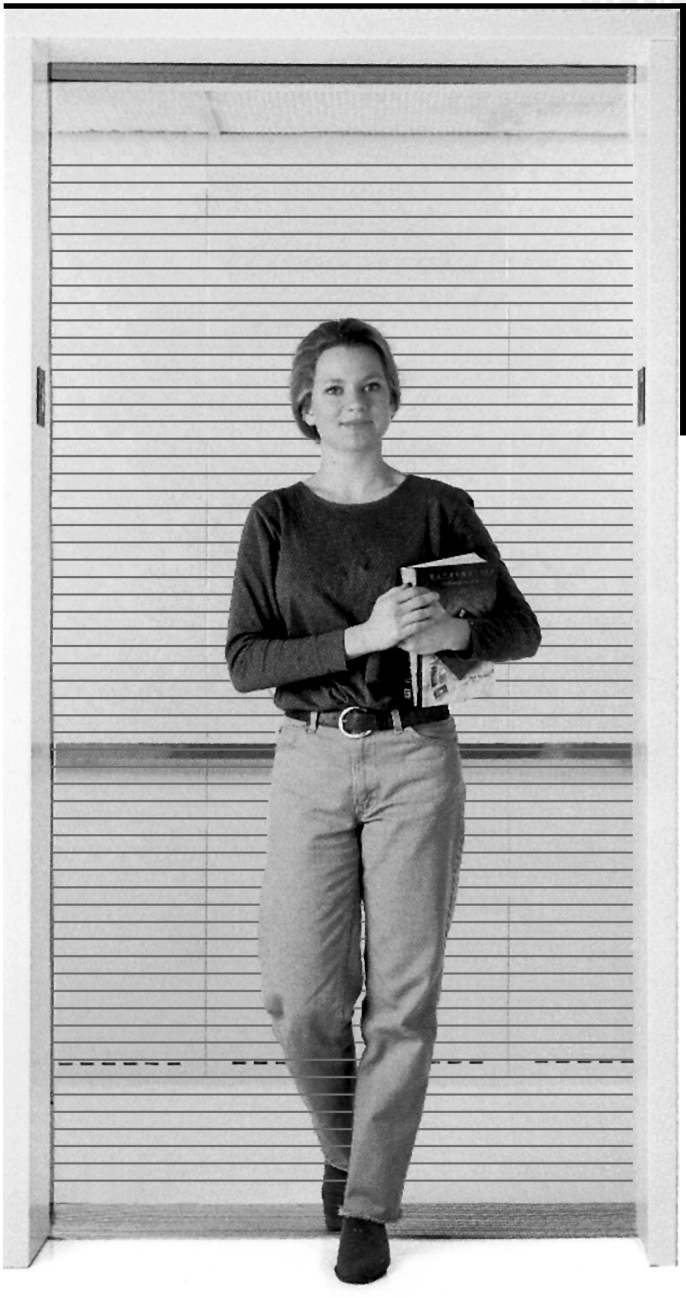

LAMBDA® senses passengers in front of or crossing the elevator entrance.

Commitment to Safety

One of the latest safety innovations is special **FALL-PROTECTION COVERALLS**, which were developed in 1995. These new coveralls have custom-fit safety harness webbing built into their design. They're lightweight, comfortable to wear, and easy to put on.

COUNTERWEIGHT SCREENING is another product in North America designed with field mechanics and service personnel in mind. The counterweight is the large weight that travels in the hoistway and is connected by ropes to the elevator. It is used to offset, or balance, the weight of the elevator car. As a result, the motor powering the elevator system only has to produce enough energy to move the added weight of passengers or cargo. As the elevator travels in the hoistway, it will pass the counterweight in close proximity. This screening provides a physical barrier between the counterweight and the car.

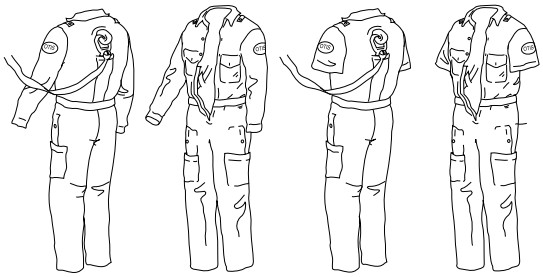

Fall-protection coveralls

Otis strives for the highest level of safety for maintenance personnel and therefore implements every reasonable precautionary measure to ensure each employee is safe at all times. Among these measures are lockout devices for use on wall switches or circuit breakers, as well as specific, detailed warning labels that help keep personnel aware of potential danger. This is called "Lockout and Tagout."

When work is performed on equipment where the operation of that equipment is not required, Otis policy dictates that machinery must be completely de-energized and locked and tagged out from its power source. The potential for injury exists in any power source- stored energy in capacitors, hydraulic or pneumatic pressure, wall switches, and circuit breakers that govern elevator-related circuits - so that power must be dissipated or blocked prior to performing work in their vicinity.

This work should be performed only by personnel trained in lockout/tagout procedures. The mechanic who will actually do the work must lock out the energy source with an assigned lock and a signed tag on the lock. When work is complete, only the mechanic who did the work and placed the lock and tag can remove them before restoring service.

Multi-hole hasp

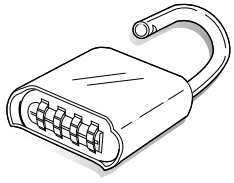

Lock

Tagout tag

Commitment to Safety

Wall switches that govern elevator-related circuits use a **WALL SWITCH LOCK-OUT** device to ensure the circuit remains off during maintenance. The Wall Switch Lockout is shown below.

Elevator circuits that are governed by circuit breakers use a **'NO HOLE' CIRCUIT BREAKER LOCKOUT**. These lockouts clamp onto most common circuits and are shown below.

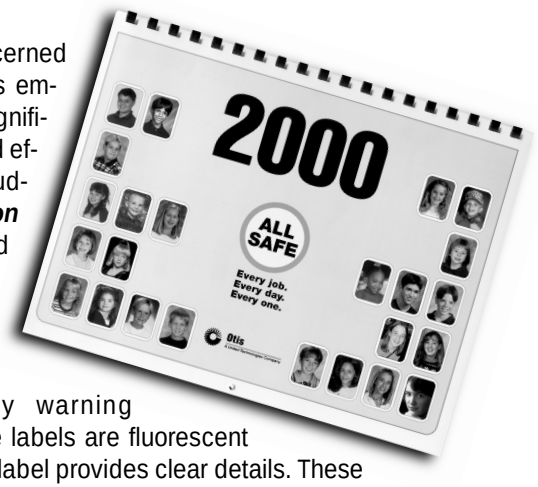

As you can see, the company is concerned with the environment surrounding its employees at job sites. It has made significant investments in sophisticated and effective job site safety programs including a comprehensive ***Safety Solution*** package of protective materials and tools. Used properly, these materials help reduce the risk of accidents and lost time due to accidents.

Safety programs include many warning labels like those shown at right. The labels are fluorescent orange with black lettering and each label provides clear details. These labels remind field personnel of hazardous conditions.

Otis has mounted aggressive campaigns on safety and increased efforts to make the company a safe place to work. Otis is constantly evaluating safety and operating procedures inside company facilities and at customer sites where Otis products are installed.

Safety is an everyday part of employees' lives at all Otis facilities. Employees perform monthly safety audits of their department and managers include a safety message at every meeting to promote the idea of employee safety awareness.

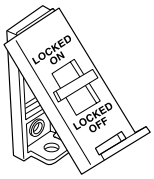

Wall switch lockout
(USA only)

Wall switch lockout/tagout
(USA only)

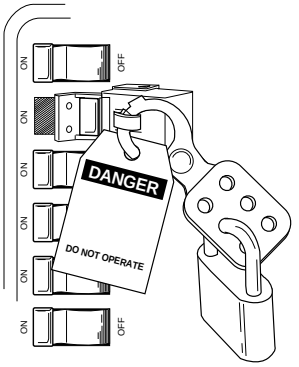

Circuit breaker lockout/tagout

Otis actively promotes safety through many initiatives. Typical is the North American **SAFETY CALENDAR**. Children of employees vie for scholarship money by drawing posters of various Otis safety procedures. The judges choose 25 winners - two posters for each month, plus the cover - and the finished calendar is distributed to all Otis employees.

Another major Otis effort is keeping you aware of the most recent industry safety standards. Otis representatives can supply you with a list of products - upgrades, retrofits, etc. - necessary to keep up with compliance to federal safety codes and regulations.

2000 Safety calendar

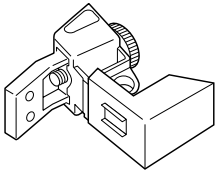

Circuit breaker lockout

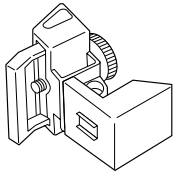

Circuit breaker lockout

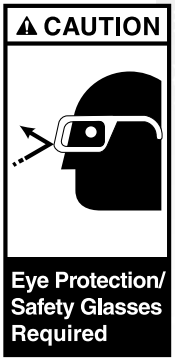

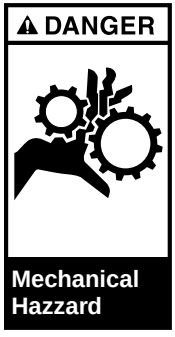

Examples of warning labels used in North America to remind field personnel of hazardous conditions.

Emergency Procedures

State-of-the-art elevator and escalator engineering has developed mechanisms that greatly reduce the risks to life and property in emergency situations. However, building personnel still play a vital role in directing occupants to safety, in monitoring equipment, and in operating controls that initiate emergency routines.

SES, Keyswitch returns elevator cars to the lobby.

The proper handling of elevators and escalators in an emergency could mean the difference between life and death. You should ensure that all your building personnel are familiar with emergency procedures suitable to your building structure and all of its equipment in the event of accidents, fire, earthquake, or power failure. Contact your local authorities and fire department for appropriate advice, inspections, and drills. For further emergency and evacuation information, please refer to pages 110-112 in Chapter 3 of this manual.

Fire service varies from country to country. Contact your local authorities and fire department for appropriate advice, inspections, and drills.

Fireman's Service - SES

In the event of an emergency, there is one feature that must be available in at least one elevator car in your building. It is called Firemen's Service - Special Emergency Service, commonly identified as SES.

SES allows control of elevator operation in the event of fire or other time-sensitive emergencies, particularly where immediate access to specific building areas or floors is necessary. One or more of your elevators is equipped with SES. It is recommended by Otis that all your elevator equipment be equipped with SES if it has not already been installed. Please call your local Otis office for information or installation.

Emergency Power Option

In the event of a power failure, your building emergency power supply is used to provide elevator operation during the failure. This will occur only if you have selected the Emergency Power Option for your elevators.

If your elevator system's Emergency Power Option is set to the AUTO mode, each car will be automatically brought down non-stop to the lobby or the previously designated floor and the doors will open to allow passengers to leave the car. After all cars have been brought to the lobby, the cars remain parked there until one or more cars are selected to provide service under Emergency Power.

If your elevator system's Emergency Power Option does not have an AUTO mode, or if that mode is not invoked, the cars may be brought down manually one at a time.

Chapter 3: Your Low-Rise Elevator

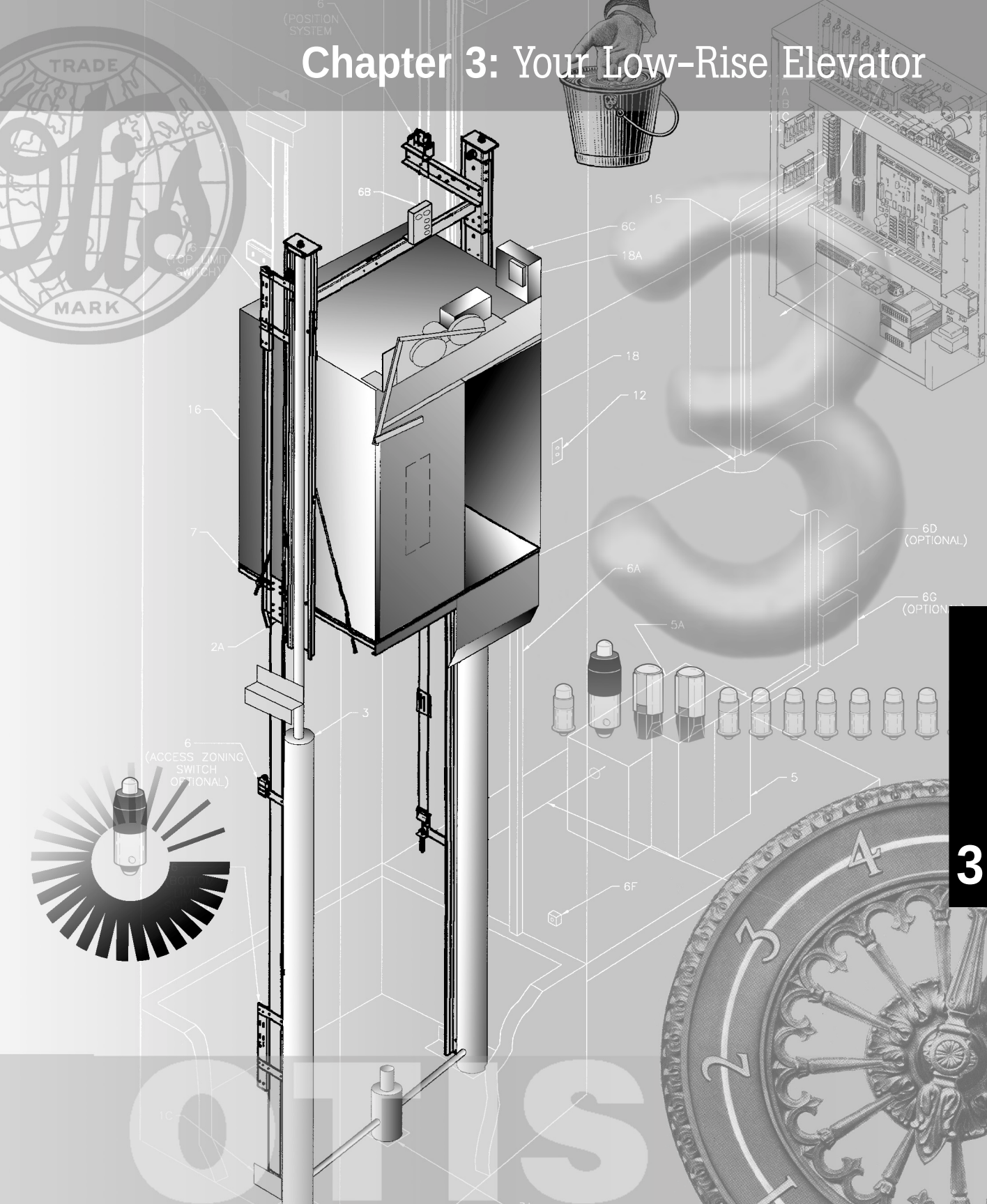

Chapter 3: Your Low-Rise Elevator

Introduction

Today's elevators provide a safe, rapid means of passenger transportation. In large part, this is due to advances in elevator technology.

All Otis low-rise elevators use microprocessor control. In the past, elevator control used relay- or switch-based logic to direct and operate the elevator's sub systems. The microprocessor makes it possible to do much more with fewer parts. It is also less susceptible to failure from wear and requires less physical space.

The microprocessor controller directs the elevator car to passenger requests, continuously monitors performance of various elevator systems, and communicates information to a central location. Communication between the controller and the elevator's power source, door operation, and motion subsystems is handled efficiently by Recommended Standard 422 cabling (RS-422). This type of cabling allows the controller to communicate with its subsystems simultaneously, therefore increasing the amount of information transferred between the systems and providing better overall service.

In years past, communication between the control mechanisms and the hall fixtures required miles of wiring through the hoistway and building because each fixture had a separate cable (discrete cabling). Today, communication between the controller and the hall and car fixtures is by remote serial link. Only one series of cables is run through the hoistway and each set of fixtures is connected to it, eliminating the need for discrete connections from each floor. This saves labor on the installation and maintenance of these cables and also reduces the complexity of the wiring environment. Signals sent via remote serial link are originated by software, resulting in faster response times.

Information from the elevator's controller is transmitted to a product called REM®, which stands for Remote Elevator Monitoring. This product adds a new dimension to the service and repair of elevator systems. All low-rise elevator systems are manufactured REM® -ready. The REM® hardware monitors the critical aspects of the low-rise elevator such as controller diagnostics, machine oil temperature and level sensors, and the LAMBDA® door detector. Information is then automatically transmitted to a technical center where the information is evaluated. If a repair is needed, the technical center places a call to the Otis Examiner.

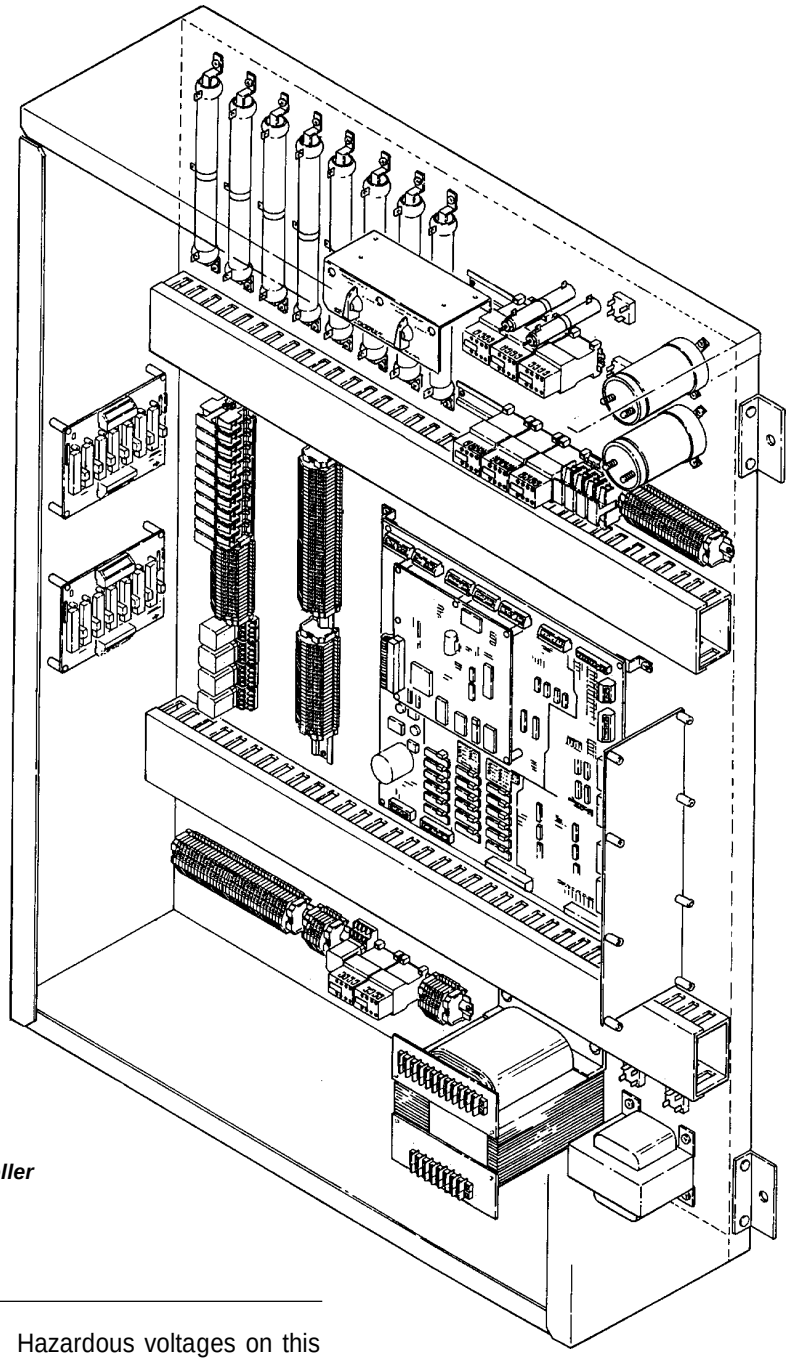

Controller

Hazardous voltages on this equipment could cause injury or death.

State of the Art Technology

Ideally, service is made on an elevator before any significant problems arise. This is the best possible method to keep your investment running. The history of your elevator's performance is maintained on file. As Otis continues to move forward with technological advancements, we can utilize this historical information to help us develop new procedures and improved capabilities. Our goal is to continually reduce the amount of service required.

Another technological innovation Otis installs in traditional elevators is the polyvinyl chloride tube (PVC) that acts as a protective barrier, separating the low-rise cylinder from the ground. The cylinder, which is sunk into the ground below the building foundation, contains hydraulic oil used to lift the elevator. Over time, hydraulic oil could leak into the ground from natural deteriorating effects. The PVC tube, placed between the earth and the cylinder, protects the cylinder from the natural deteriorating effects of the earth. This helps reduce the risk of ground contamination and prolongs the life of the cylinder. There is a gap between the PVC tube and the cylinder that serves as a collection point in the event a leak occurs. This gap should be checked regularly by Otis maintenance personnel to monitor your system.

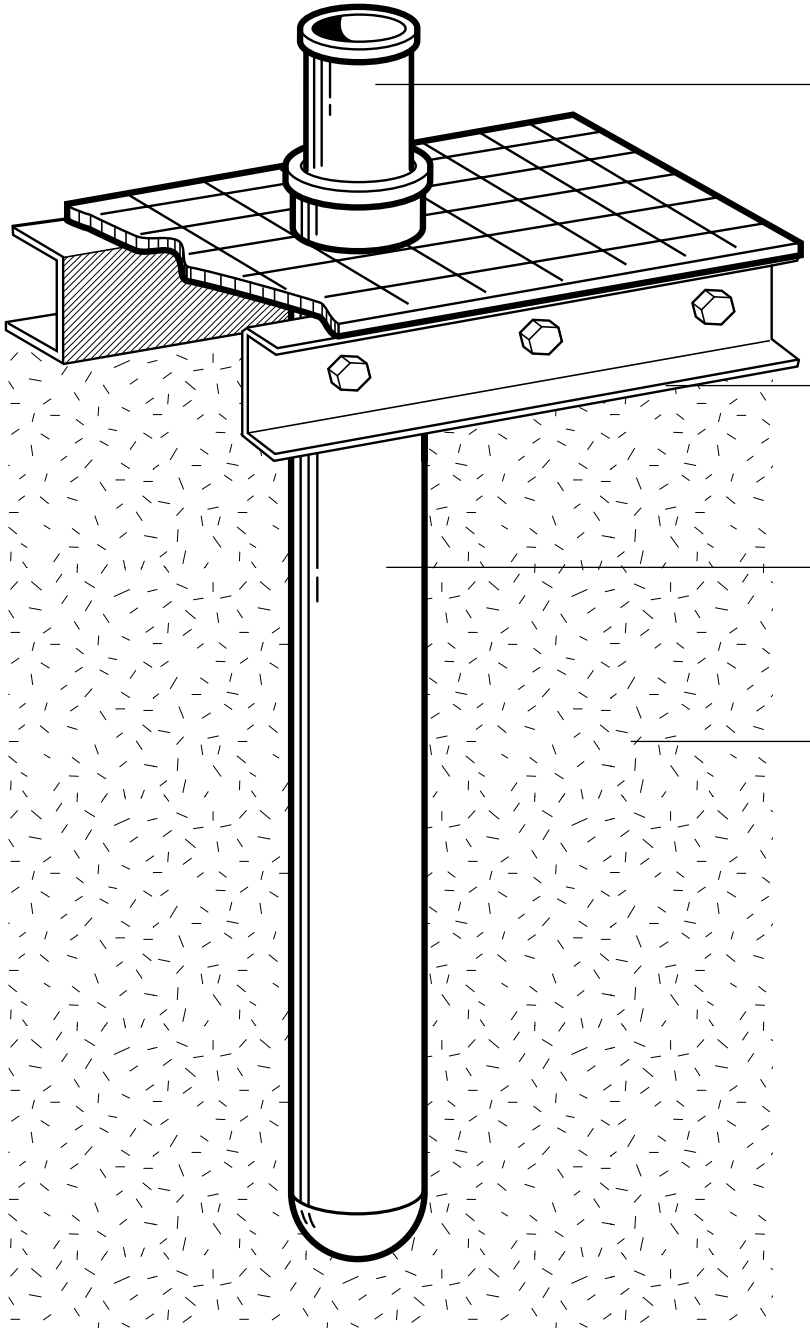

Polyvinyl chloride tube (PVC) acts as a protective barrier from the ground.

Your knowledge of elevator operation may be limited to the notion that pressing a button brings the elevator to you and pressing another button in the elevator car takes you up or down. However, when the elevator's operation is compared to an automobile's operation, many similarities are apparent and the elevator becomes much less a mystery.

Like the automobile, the elevator requires a power source and a means of converting that power into motion. Control is needed for acceleration, deceleration, and stopping. An infrastructure (roadway) and associated traffic control mechanisms

Automobile to Elevator Operation Comparison

OPERATION	AUTOMOBILE	ELEVATOR
Power	Engine	Hydraulic Motor and Pump
Power Conversion	Transmission	Hydraulic Valve, Plunger, and Cylinder
Braking	Disc/Drum	Leveling and Slowdown Switches, Valve
Instrumentation	Dashboard Indicators	Lanterns, Position Indicators
Control	(functional and safety) Lights, Temperature, etc.	Operating Panels, Hall/Car Buttons, Keyswitches, Jewels
Direction Guides	Tires	Roller Guides
Safety Devices	Air Bags, Emergency Brake	Car Buffer, Door Detector, Special System Switches, Emergency Stop Switch, Communications Options
Doors	Door Locks	Interlocks (each landing)
Engine Protection	Thermostat, Oil Indicator, Alternator Indicator	Oil Pressure Switch, Low Oil Switch, Reverse-Phase Relay, Overcurrent Relay

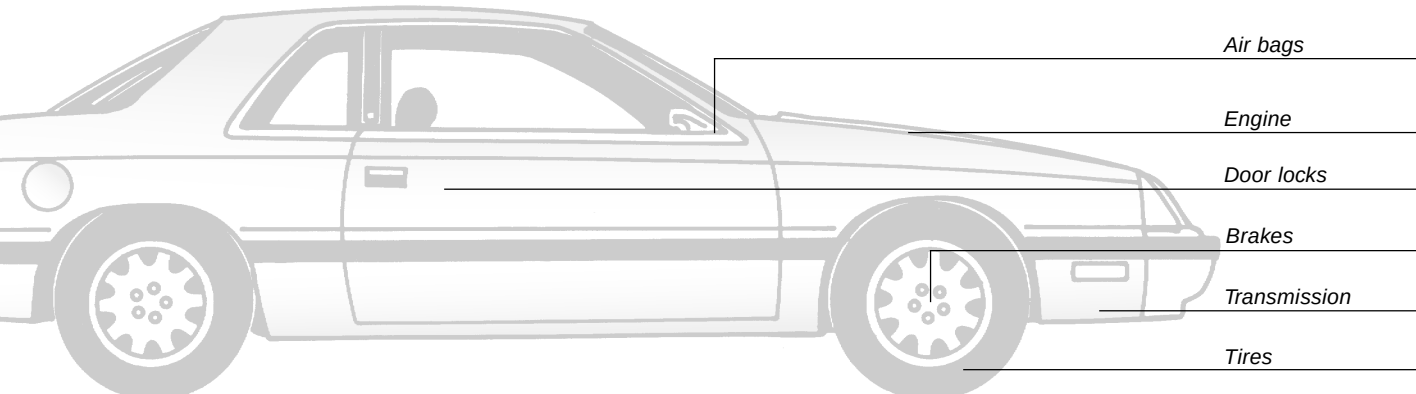

are needed to control the boundaries of movement. Also like the automobile, devices are furnished for comfort and safety while traveling. Many of the names used to describe the parts are different, but the operations are basically the same. The primary difference is that, in an elevator, a device called a controller drives the elevator automatically.

The passenger makes the destination decision, then the elevator safely locks the door, starts moving, accelerates, slows down, stops, and unlocks the door at the destination. The table on page 40 shows a comparison of functions and the component names between the automobile and the elevator.

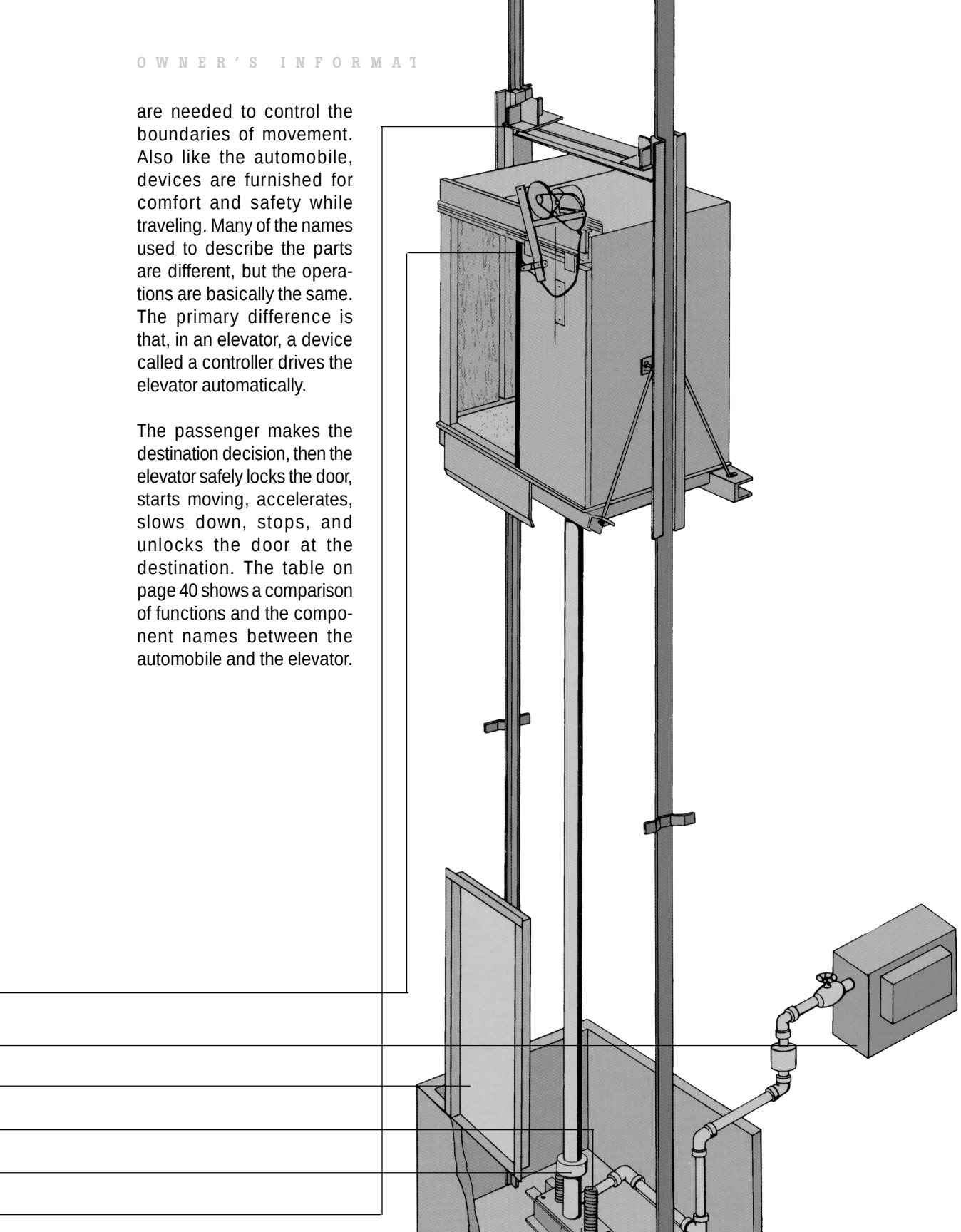

Typical Sequence of Operation

In order to gain further understanding of how a low-rise elevator system works, let's take you through a typical sequence of operation. Through this exercise, you are introduced to some of the principal subsystems of the low-rise elevator. The example used is general and intended only as an overall picture of the elevator's operation. In this sequence, the elevator is parked at the same landing where a passenger has registered a call request. The elevator door is closed.

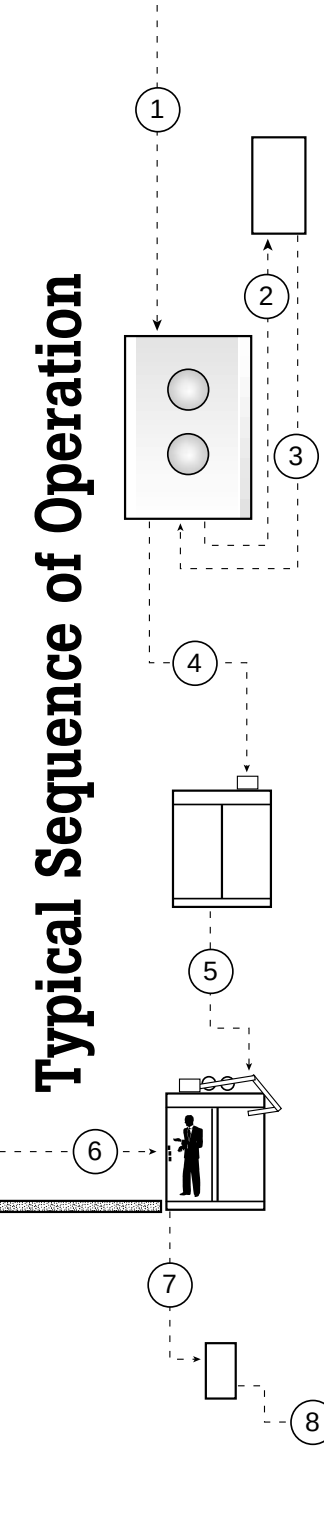

1. The passenger presses a hall button to call the elevator car.
2. An operational control signal is passed to the elevator controller, capturing the request.
3. The button illuminates to let the passenger know the request has been received.
4. An operational control signal is passed to the door-open relay contacts, allowing operation of the door operator motor located on top of the elevator car.
5. As the car door opens, the door vane attached to it intersects the hoistway door interlock and opens the hoistway door along with the car door.
6. The passenger enters the elevator car and presses the destination floor button located on the car operating panel.
7. An operational control signal is passed to the elevator controller.
8. The floor button illuminates, letting the passenger know the request has been received.
9. A signal is sent to the door-close relay contacts allowing operation of the door operator motor located on top of the elevator car.
10. As the car door closes, the door vane also closes the hoistway door.
11. A motion control signal is sent to the pilot relays and motor contactor located in the controller.
12. The contactor circuit connects high voltage to the hydraulic pump/motor, which is submersed in the hydraulic oil tank.

13. The motor starts and the rotors of the pump turn, producing oil flow to the hydraulic valve mounted above the pump.

14. The hydraulic valve, which controls the direction and flow rate of oil, passes the oil to the cylinder.

15. The plunger, which is fastened to the bottom of the elevator car, is housed in the cylinder. The hydraulic oil pressure forces the plunger to rise and lift the car.

16. The elevator car begins upward travel.

17. A flexible metal strip, called a reader tape, is mounted in the hoistway and runs the entire length of the elevator hoistway. Magnets are mounted on the reader tape and positioned at predetermined distances. A piece of equipment called the tape reader is mounted on the elevator car. When the traveling elevator car and tape reader pass the magnets, a signal is generated and sent to the controller.

18. The controller sends a signal to the hydraulic valve to reduce, and eventually stop, oil flow to the cylinder.

19. The reduced oil rate slows the speed of the elevator car and then brings it to a stop.

20. The events are measured and timed so that the elevator car stops at the destination floor.

21. The controller determines when the elevator car is stopped within the door zone and removes the connection to the pump/motor contactor, stopping the motor.

22. The doors open and the passenger exits the elevator car.

23. The elevator uses the same logic to travel in the down direction. The difference is that instead of adding oil to the cylinder, oil is released, allowing the plunger to move down back into the cylinder.

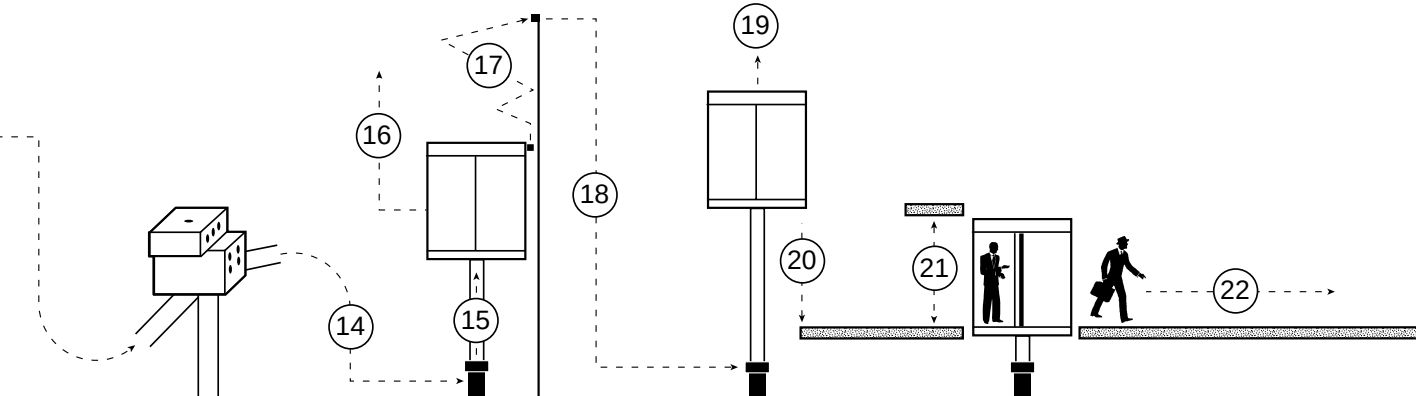

The Operation of Your Low-Rise Elevator

Elevator operation is divided into three main areas: motion control, operational control, and door control. Motion control refers to the elevator equipment that performs movement and elevator positioning. Operational control refers to elevator equipment used to detect and register the hall and car call requests and perform the decision-making functions. Door Control is responsible for door opening and closing.

There are three low-rise elevator models: LVM, LVML, and LVME. The low-rise elevator model designations indicate the lifting technology employed. The LVM model is a system whose lifting element (the plunger) is sunk beneath the building's foundation. The LVML model uses two plungers mounted to the building's foundation floor. The LVME is a roped low-rise system that uses both a plunger and roping equipment to lift and lower the elevator car. Each model is detailed later in this chapter.

All elevators are built into an open shaft within the building. This shaft is called the hoistway. Rails are mounted to two facing walls and run the length of the hoistway. The rails act as the travel guides for the elevator cab assembly. At each floor, entrances are built for passenger access.

All of the elevator's power originates from the building's power supply. All buildings use three-phase AC power lines with voltage ranges between 208 VAC and 600 VAC. The standard frequency for the United States is 60 Hz. Locations other than the United States generally use a frequency of 50 Hz.

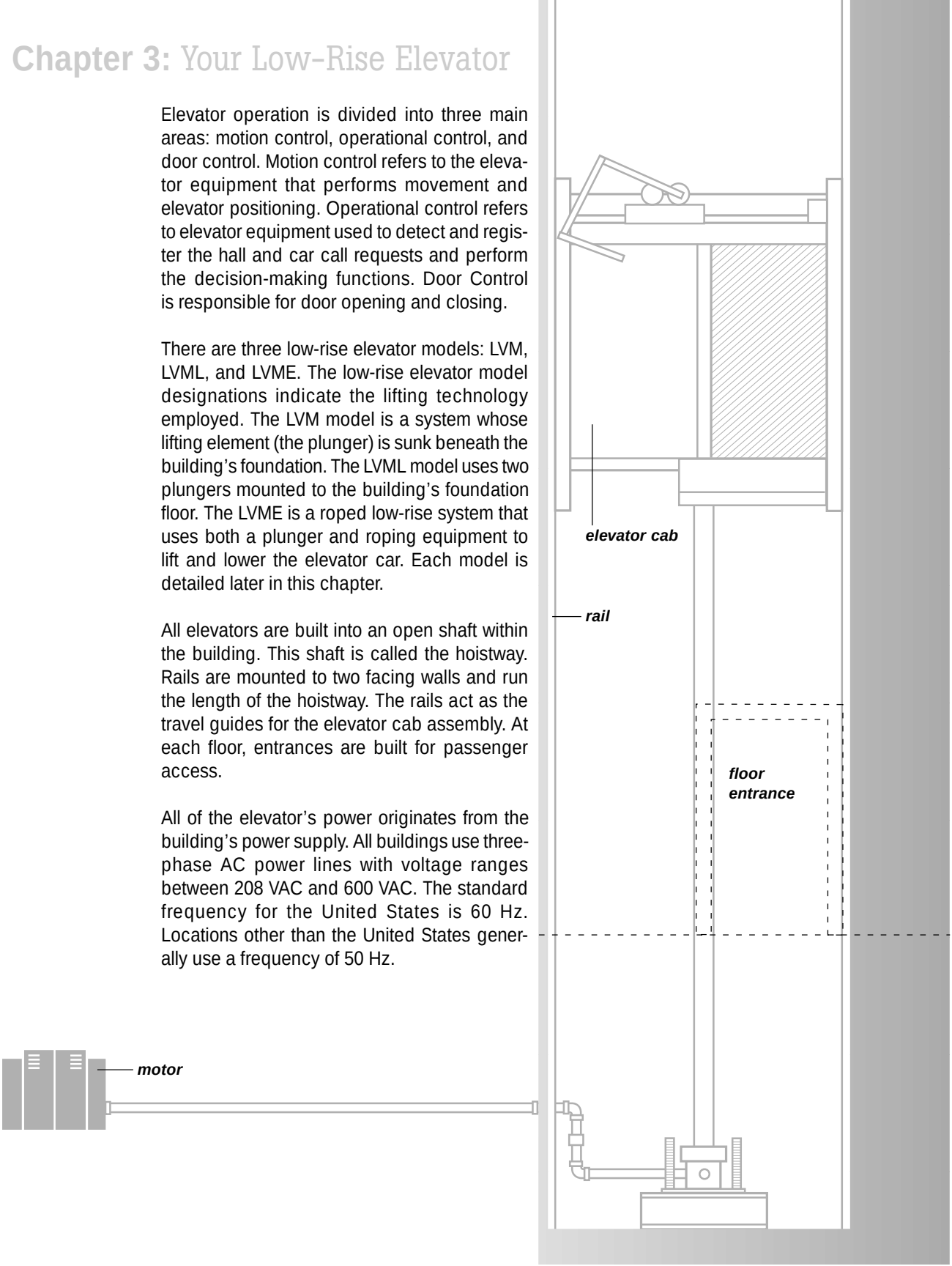

The Microprocessor Controller

The controller is the central nervous system of the elevator. The controller assembly houses electrical, electronic, and microprocessor components that provide three main areas of control: motion, operation, and door control. It is here that all signals are processed. The signals are either generated by a passenger, such as calling the car to a landing, or the system itself, such as monitoring systems to ensure they are operational. The hydraulic control board coordinates all of these signals. If you think of the controller as the central nervous system, then the hydraulic control board is the brain. The board includes three printed circuit boards:

- The Microprocessor Board
- The Input/Output Board
- The Extended Input/Output Board

Today, we find the microprocessor in many applications used in our everyday lives: appliances, automobiles, banks, and so on. It is also used extensively in elevator control. Although small, it contains thousands of integrated circuits on a single chip. Prior to the microprocessor, elevators used discrete parts such as resistors, capacitors, and switches to do the same work. However, very large enclosures were required to house these parts.

The primary functions of the controller are to track the direction and position of the elevator car, monitor the safety circuits, and respond to the elevator's demand patterns efficiently. The system and passenger information (in the form of electrical signals) are directed to the input/output board. One of the functions of the input/output board is to serve as traffic manager of the signals to and from the controller.

The controller needs additional instructions, or inputs, to make a correct decision. The instructions for the controller are kept in three chips that hold stored information or memory. This is commonly referred to as the "programmed memory." The memory chips are:

Programmed Memory

MEMORY CHIP TYPE	INFORMATION STORED
Electrically Programmed Read Only Memory (EPROM)	Operating Program standard to low-rise elevators
Electrically Erasable Programmed Read Only Memory (EEPROM)	Program instructions special for the unit
Static Random Access Memory (SRAM)	A temporary work storage area

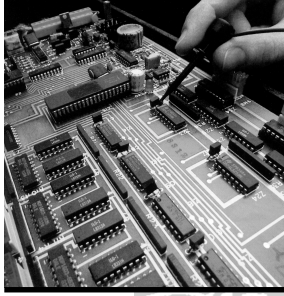

Microprocessor board

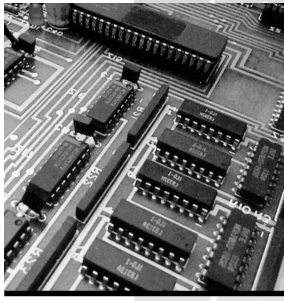

Input/Output board

The microprocessor is used in many electronics today.

The controller takes the system signals, which represent various conditions within the elevator, and processes or samples them against the programmed instructions maintained in the memory chips. Based on the processing of the data, the controller makes new instructions.

Instructions, in the form of signals, are sent to various pieces of equipment to carry out operations properly, within acceptable time, and in a safe manner. The microprocessor has the ability to change instructions easily. This may include adding features to your elevator service. Changing the program instructions is all that is required to accomplish this; additional components or wiring are not needed.

Information in the microprocessor is used to help troubleshoot the elevator. There are three basic methods to access this information:

- On-Board Display
- Remote Elevator Monitoring (REM®)
- Light Emitting Diodes (LEDs)

The On-Board Display provides the maintenance mechanic with a quick means of troubleshooting the elevator's controller. He or she can make parameter changes, monitor elevator car status, and perform routine diagnostics. By manipulating the buttons, the Otis mechanic can toggle through various display functions. There are 12 main functions available:

1 ..... Operational Control Subsystem Status
2 ..... Door Status
3 ..... Shutdown Codes
4 ..... Counters
5 ..... Battery/RAM Clear
6 ..... Operational Control Subsystem Status Parameters Setup
7 ..... Car Remote Serial Link Display
8 ..... Group Remote Serial Link Display
9 ..... Motion Control Subsystem Parameters Setup
10 ..... Door Control Subsystem Parameters Setup
11 ..... Position Indicator Setup
12 ..... Enter Car Calls

The detailed instructions for using the On-Board Display are provided in Appendix A.

Remote Elevator Monitoring (REM®) is a microprocessor-based product and service that captures the elevator's performance and problems and automatically communicates them to OTISLINE®, a 24-hour-a-day monitoring service. This feature is an Otis tool and is only available with Otis Service. The principle benefits of using this product are:

- History of elevator performance. Otis' automated record keeping system provides a personal history of your elevator, which is used for planning maintenance and determining elevator efficiency. This information increases overall elevator performance, decreases downtime, and reduces tenant complaints.

- Faster diagnosis, faster response. Problems are immediately communicated to OTISLINE® where a central monitoring operation identifies the problem and dispatches an Otis Maintenance Examiner.

REM® consists of a main control line unit with its own microprocessor board, central processing unit (CPU), and modem with a separate phone. If there are additional elevators, then satellite units are added. These have their own microprocessor boards, but do not need separate modems, relying on the main unit modem instead. All of this equipment requires communication, so cable is added to connect the units. Sensors are used to monitor such items as oil levels, oil temperatures, and door performance and door detectors.

REM® is capable of constantly sampling (at very high speeds) the actions of the elevator. It can capture the data and communicate it to another location for additional evaluation. REM® contacts OTISLINE® when the elevator is unable to perform its programmed instructions. In addition, REM® routinely provides OTISLINE® with information regarding the elevator's general performance. REM® reacts to three types of information:

- **Alarms.** A problem that causes the elevator to shut down.
  In this instance, REM® automatically and immediately makes a phone call to OTISLINE® and transmits data describing the problem.

- **Alerts.** A problem that causes elevator system degradation, but allows the elevator to continue operating.

In this instance, the problem is identified and transmitted. Otisline® adds the alert to the maintenance examiner's list of tasks to be done during the next scheduled maintenance examination. If an elevator records 10 or more of the same alerts on the same day, the alert is upgraded to an alarm and Otisline® dispatches a maintenance examiner to the elevator.

- **Performance Messages.** Routine elevator information, such as the number of elevator runs and number of door operations. This information is transmitted at predetermined times. It is recorded and used for analysis in planning future maintenance.

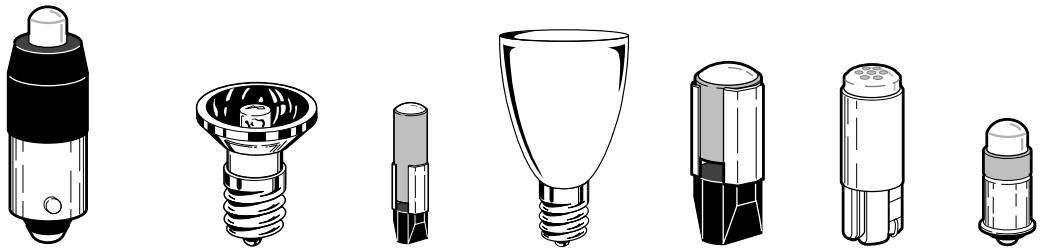

The third method used to obtain performance information is through the visual means of Light Emitting Diodes, or LEDs. LEDs will turn on or off depending upon the function taking place. The mechanic will use the visual feedback to verify whether or not the function is working properly. For example, if the car is in the normal mode of operation, the LED designating that function will remain lighted. If the mechanic sees that the LED is off, he or she immediately knows that something is wrong. There are a total of 30 LEDs located on the input/ouput board in the controller. The location and description of these LEDs are detailed in the following graphics and tables.

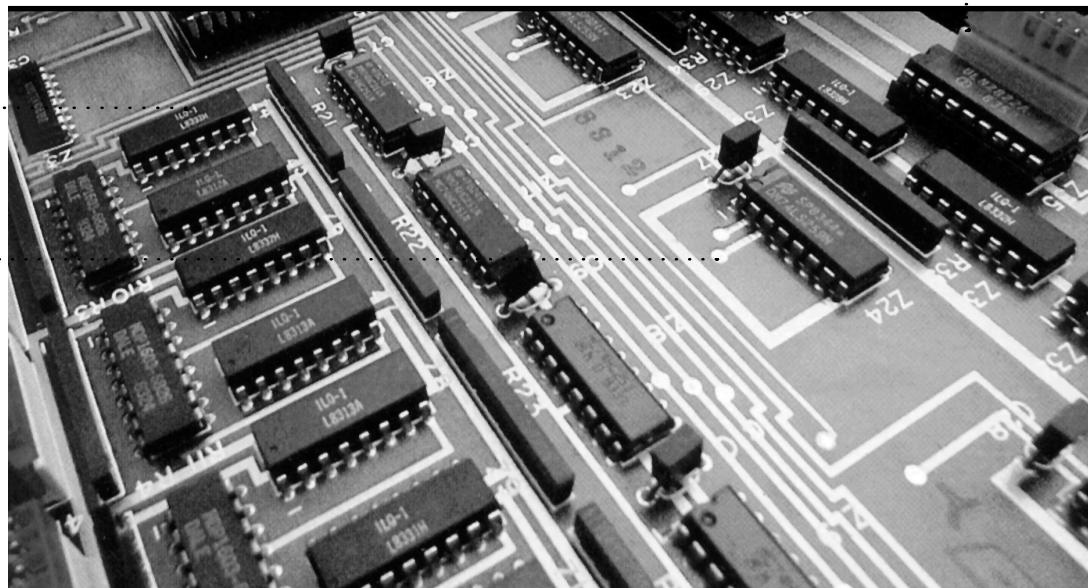

Motion Logic Safety Circuits

REFERENCE DESIGNATION	SIGNAL ACRONYM	DESCRIPTION
L1	MNOR	Lit when car is in normal mode of operation.
L2	DZ	Lit when car is in door zone.
L3	CDGLSTAT	Safety chain, door zone, gate switch, and door lock status. Lit when car is in door zone and safety chain is intact.
L4	MTCI	Lit when car is in top-of-car inspection mode.
L5	MMIS	Lit when car is in machine room inspection mode.
L6	GSTAT	Lit when front and rear gate switches are closed.
L7	LSTAT	Lit when hoistway door locks are closed.
L8	DNRDY	Lit when car is ready to run down.
L9	UPRDY	Lit when car is ready to run up.
L10	MIIS	Lit when car is in the in-car inspection mode.

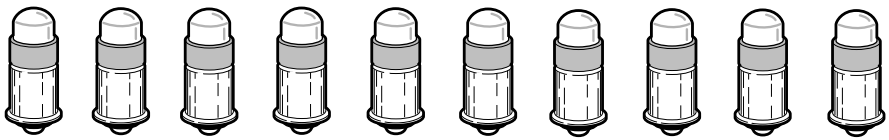

AC Input

REFERENCE DESIGNATION	SIGNAL ACRONYM	DESCRIPTION
L11	C	Lit when safety chain is okay.
L12	RGS	Lit when rear door gate switch is closed.
L13	FGS	Lit when front door gate switch is closed.
L14	LADS	Lit when door is locked at lower or bottom access landing.
L15	RDS	Lit when rear hoistway door is closed and locked.
L16	HDS	Lit when intermediate hoistway doors are locked.
L17	UADS	Lit when door is locked at upper access landing.

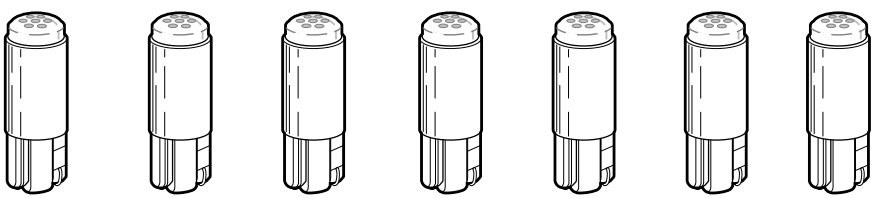

AC Output

REFERENCE DESIGNATION	SIGNAL ACRONYM	DESCRIPTION
L18	UM- HW	Lit when up main valve hardware switch SSR3 is enabled.
L19	UM- SW	Lit when up main valve software switch SSR4 is enabled.
L20	UL- HW	Lit when up leveling valve hardware switch SSR2 is enabled.
L21	UL- SW	Lit when up leveling valve software switch SSR1 is enabled.
L22	DM- HW	Lit when down main valve hardware switch SSR7 is enabled.
L23	DM- SW	Lit when down main valve software switch SSR8 is enabled.
L24	DL- HW	Lit when down leveling valve hardware switch SSR6 is enabled.
L25	DL- SW	Lit when down leveling valve software switch SSR5 is enabled.
L26	2A- HW	Lit when 2A pilot relay hardware switch SSR12 is enabled.
L27	2A- SW	Lit when 2A pilot relay software switch SSR13 is enabled.
L28	1A- HW	Lit when 1A pilot relay hardware switch SSR14 is enabled.
L29	1A- SW	Lit when 1A pilot relay software switch SSR15 is enabled.

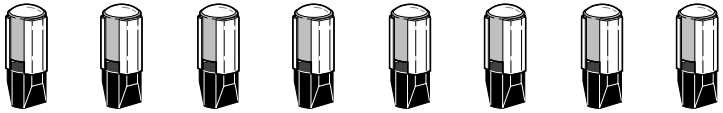

Power Supply

REFERENCE DESIGNATION	SIGNAL ACRONYM	DESCRIPTION
L30	24 VDC	Lit when 24-volt power supply is on.

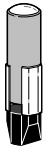

Emergency Return Unit

The *Emergency Return Unit* is a battery-operated device that returns the elevator car to a designated floor in the event of a building power loss . The ERU opens the elevator doors to discharge passengers, closes the doors, and shuts down the elevator. It is wired between the main line disconnect switch and the controller. The switching logic of the ERU is arranged so that power continuity to the elevator is maintained. Additional circuits provide battery charging and a normal/test switch to test the unit.

Indicator lamps provide operating information about the ERU. The table below shows the condition of the indicators when the ERU is in "normal" operation.

Indicator Lamp	Indicator Color	Condition
Emergency Power On	Yellow	***Off*** when Normal
Charger On	Green	***On*** when Normal

A meter that measures the battery's charge is located above the indicators. This meter should be checked periodically to make sure the battery has sufficient charge to operate. The meter should indicate between 26 and 27.5 volts.

Located just below the indicator lamps is the switch used to test the system. The system should be tested at least once per year. To test the system, move the switch to the "test" mode. An alarm will sound to indicate that the unit is engaged and the indicator lamp for Emergency Power On will light. If an alarm does not sound, then the unit is not working properly and will have to be examined.

When a building experiences a power failure, the power supply engages and automatically returns the elevator to the lowest landing, opening the doors to allow passengers to exit safely. The elevator car remains parked with doors closed until normal power is restored.

The ERU not only improves passenger safety, but it also installs quickly with little disruption to building tenants.

Your elevator has a supplemental emergency supply of power provided by a 12-volt DC battery unit. It is located within a top-of-car integration box mounted to the top of the elevator car. In the event main power is lost, power is switched automatically to the emergency supply and lights two lamps located in the elevator car's ceiling. The supply is rated so that the lamps remain lit a minimum of four hours.

The Alarm button and Emergency Stop switch located in the car operating panel are wired into the emergency power circuitry. When operated, an alarm bell, located on the car top, sounds continuously. Communication begins between those in the elevator car and either building personnel, an outside emergency authority, or OTISLINE®. The choice depends on the equipment and the emergency services selected for your particular elevator.

Low-Rise Lifting Equipment

The equipment that lifts the elevator car is housed in the machine room of your building. The principle components that make up the low-rise lifting equipment are the plunger and cylinder assembly (also known as the "jack"), an AC motor directly attached to a pump, and a control valve.

The plunger and cylinder assembly receives hydraulic oil at a measured rate. The device controlling the rate of oil flow is called the control valve. The control valve is connected by piping to the motor/pump assembly, which is used to force hydraulic oil through the pipe to the plunger and cylinder.

The motor/pump assembly is submersed in the hydraulic oil of the oil tank. The elevator controller is mounted on the outside wall of the oil tank. All of this equipment is located adjacent to the bottom of the elevator hoistway, commonly referred to as "the pit."

To lift the elevator, electrical energy from your building is converted to mechanical energy. Electricity is fed to the submersed motor. When the motor is operating, oil flows from the tank, through the valve, and then toward the plunger and cylinder assembly. The increase in oil volume in the cylinder forces the plunger to lift, and consequently, the attached elevator car to rise.

Certain physical properties of fluid make it an effective means of producing mechanical power. Fluid can change shape, it can be divided to do work at different

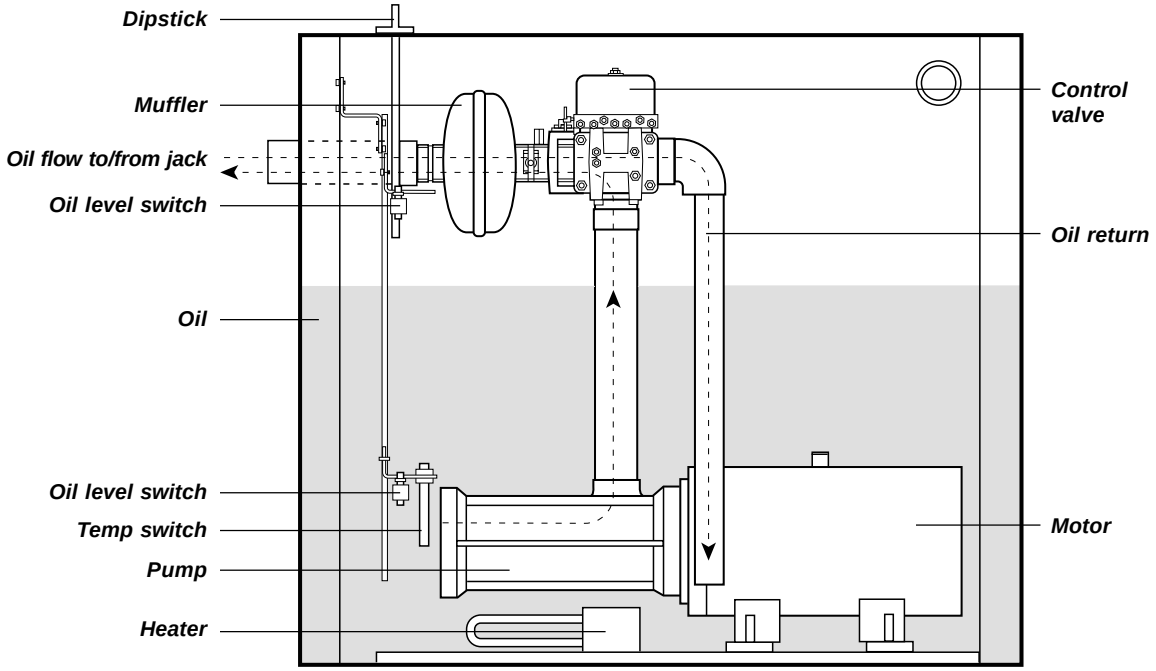

locations, and it can transmit a force in all directions. Since fluid is practically incompressible, mechanical forces may be transmitted, multiplied, or controlled by means of hydraulic fluids under pressure.

In the hydraulic elevator, it is the volume of oil being added into the cylinder (and not the pumping action of the pump) that causes the plunger to lift. The pump does not pump pressure, it only produces flow. Pressure results from the restriction of the hydraulic oil to flow.

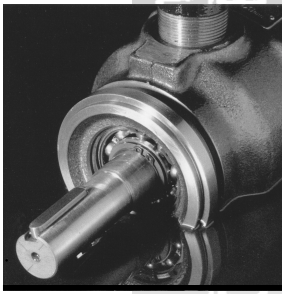

The four key physical requirements for hydraulic lifting are the motor, the pump, the control valve, and the plunger/cylinder assembly. The various hydraulic models employed by Otis each uses the technology in slightly different ways. As this chapter moves forward, those differences will be presented.

The Motor

The function of the motor is to provide the necessary torque to the hydraulic pump. The motor has been used for decades to provide efficient, low-maintenance power over long periods of time. Hydraulic elevator motors generally range between 15 horsepower (hp) and 50 hp. Power for the motor comes from the building's power supply.

When the motor first starts, it can draw five to eight times the electrical current of its rated full load running current, depending on the size of the motor. This condition is referred to as the starting current. Because of this, devices known as starters/contactors are used as a means of controlling the amount of voltage supplied to the motor. Think of this in terms of your automobile's engine, running at its top acceleration as measured in revolutions per minute (RPMs), when first started. Over time, this high acceleration rate would prematurely wear engine parts.

Three methods of elevator starting are used: *Across-the-Line*, *Wye-Delta*, and *Solid-State Relay*. The method employed in your installation is generally an optional selection. The equipment used and wiring configuration differ to meet the type of starter connection.

Across-the-Line starting requires that each wire of the building's three-phase power supply be wired to an input terminal of the starter. Corresponding output terminals of the starter are wired to the elevator's motor. This method means the motor is connected directly and receives the full force of the starting current.

Wye-Delta starting uses two contactors to start the motor. The first contactor connects the motor to the power lines in a configuration that limits starting current. When the first contactor is in operation, it is said to be Wye-connected. The starting current and torque at this time are limited to 33% of the values used by *Across-the-Line* starting. Once the motor reaches a predetermined measure of its normal

Hazardous voltages on this equipment could cause injury or death.

speed, the first contactor (called Wye) drops out and the second contactor (called Delta) energizes. At this point, the motor is connected in normal running configuration.

Solid-State starting uses power semiconductors instead of contactors. Unlike contactors, power semiconductors can be switched on and off at very high speeds and at specific times during the three-phase 60 Hz power cycle. By controlling the semiconductor's on/off function during the power cycle, the current can be controlled. Typically, the solid-state starter will be adjusted to provide a higher starting current than is available with Wye-Delta. This additional torque allows the motor to be brought up to operating speed quickly and smoothly. Motor operating speed for solid-state starting is reached faster than with Wye-Delta. An additional benefit is that since the solid-state starter does not use contactors, the noise of contactors opening and closing is completely eliminated. Maintenance costs associated with contactors are also eliminated.

Electrical devices are always susceptible to high voltages and starting currents. Your elevator motor is no different. There are protective devices available to monitor conditions. Should a power supply or an over-current problem arise, the protective devices would allow the elevator to safely shut itself down.

One protective device is the reverse-phase relay. The reverse-phase relay continuously monitors three-phase input power lines for the following abnormal conditions:

- Loss of any phase
- Low voltage on any or all phases
- Phases reversed from proper sequence
- Phase imbalance

The reverse-phase relay device is mounted in the controller. The relay is wired between the main line disconnect switch and the starter/contactor. If any of the above conditions are encountered, the relay activates and prevents the condition from traveling to the starter/contactor and motor.

The current overload relay is another device used. This device is mounted in the controller. Like the reverse-phase relay, it is wired between the main line disconnect switch and the starter/contactor. As mentioned earlier, the initial current drawn by the motor when first starting can be five to eight times its normal operating current. The current overload relay monitors the amount of current passing through each of the lines of the three-phase power supply. It activates within five seconds if the high starting current continues. When activated, it turns off the starter to denergize the motor.

The Pump

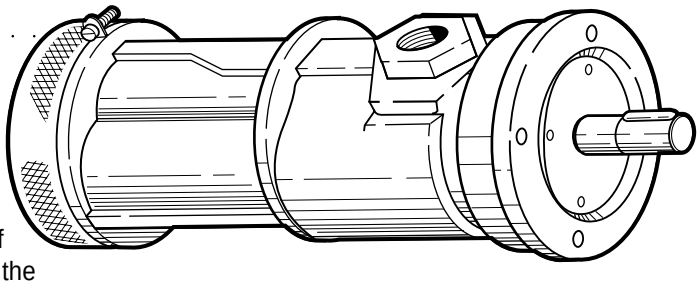

The pump is directly coupled to the output shaft of the motor. It is rated for 500 pounds per square inch (psi). The pump converts the *mechanical energy* produced by the rotating shaft of the motor to *hydraulic energy*, the flow of oil. The pump is classified as a positive-displacement type, due to its ability to maintain a constant output regardless of oil pressure.

The pump/motor assembly is submersed at the bottom of the oil tank. The pump has an inlet line which accepts oil from the tank and an outlet line, which passes the oil to the control valve. The rate of the oil flow in the pump is typically between 56 and 260 gallons per minute. The rate required depends on the elevator's plunger diameter and speed. Oil viscosity and the oil cleanliness are important factors for the hydraulic system to operate at peak performance level. The pump is equipped with a strainer to prevent debris from entering the inlet line toward the control valve.

There is also the option of installing a heater in the oil tank to help maintain proper oil viscosity. The oil heater is generally used in colder climates to maintain an oil's viscosity. It is important to keep the oil within its specified operating temperature range so it can flow smoothly to the jack assembly. The oil heater is mounted to the tank floor, submersed in the oil, and operates on a preset thermostat. The unit contains a heater element, similar to the heating element of a toaster, where an electric current is passed through it. The element material resists the electric current and heat is produced, heating the surrounding oil in the process.

The Control Valve

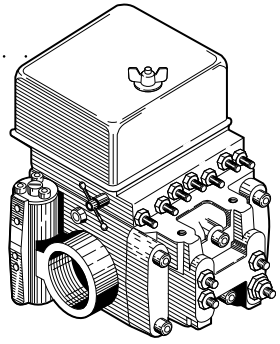

The hydraulic control valve regulates the amount of oil to and from the plunger and cylinder assembly. The oil flow governs the speed at which the elevator rises and lowers. The control valve performs three basic operations to ensure a smooth transition between the start and stop of the elevator:

- A start-to-full-speed operation
- A full-speed-to-leveling operation
- A leveling-speed-to-stopping operation

The flow rate is regulated to meet the requirements of the three operations stated above. In response to an up direction elevator call, the control valve passes oil to the plunger and cylinder assembly. The motor/pump operates in response to an up direction call. When the elevator descends, the weight of the elevator car and plunger

assembly forces the oil back through the hydraulic control valve. Once again, flow rate back into the tank is regulated to meet the operational requirements.

The Plunger and Cylinder Assembly ("Jack")

The jack assembly raises and lowers the elevator car. The assembly's components include two lengths of steel tubing- each a different diameter- called the plunger and cylinder. The larger diameter tube is the cylinder. The plunger and the hydraulic oil are inside of the cylinder. The plunger and cylinder are designed to exacting engineering specifications for your building's rise, load capacity, and speed requirements.

The plunger tube raises and lowers through the cylinder head. The cylinder head also wipes the oil from the plunger tube and stops the plunger from rising out of the cylinder. The length of these components depends on the type of hydraulic arrangement: holed (LVM) or holeless (LVML). In the LVM arrangement, the cylinder is sunk beneath the building's foundation. For the LVML and LVME arrangements, the cylinders are mounted to the building's foundation (above ground).

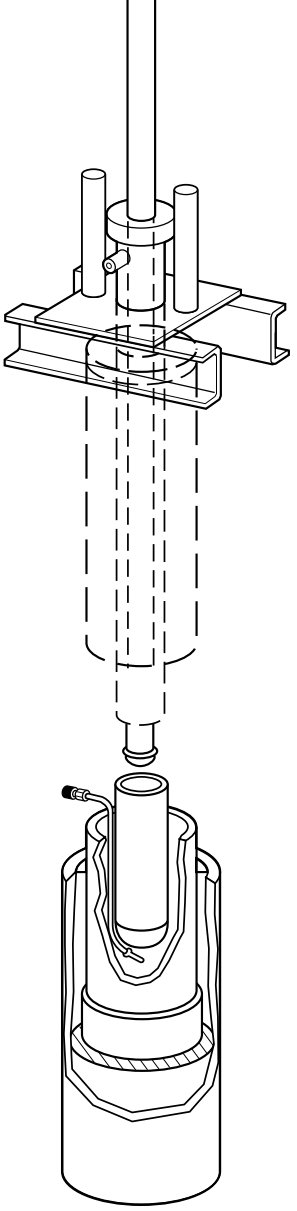

If you place your hand into a pail of water, you'll observe that the water moves, or is displaced, by the action. You may also notice the tendency of the water to resist your hand in the form of force. The force applied to the resistance of the liquid produces pressure. Hydraulic pressure lifts the elevator car. Oil flows from the control valve through piping and into the sealed cylinder. The oil in the cylinder is not compressible and pressure builds up. Eventually, the pressure reaches a level that overcomes the weight of the plunger and elevator car (called "gross load"), and pushes the plunger upwards, lifting the elevator car. The control valve and size of the motor/pump determine the speed at which the elevator lifts. Down travel is controlled by the valve alone; the motor and pump do not operate.

In older hydraulic elevators, the cylinder is in contact with the ground and, over time, natural forces will eventually cause deterioration. A plate is welded to the bottom of the cylinder to seal it. A second bottom, known as a safety bulkhead, is added for additional protection to the cylinder.

The potential exists for oil from the cylinder to leak into the ground from the earth's natural effect on it. Ground contamination from leaking oil is costly both environmentally and monetarily. Today, all of Otis' hydraulic cylinders use additional protection in the form of a PVC (polyvinyl chloride) tube that separates the cylinder and the ground. This PVC tube not only acts as a barrier to the earth's effects on the cylinder, but also provides the capability to evacuate leaking oil from the cylinder and monitor its presence.

A number of devices, some optional, help handle the various issues that come up when using substances such as oil, and machinery like motors and pumps. The following paragraphs provide you with additional information about your equipment.

Fluid pulsation from the pump transmits through the elevator structure and into the elevator car. To alleviate this effect, a muffler may be used between the various piping connections from the control valve to the cylinder. To further compensate for this disturbance, sound isolation pads are mounted between the oil tank floor and the motor feet.

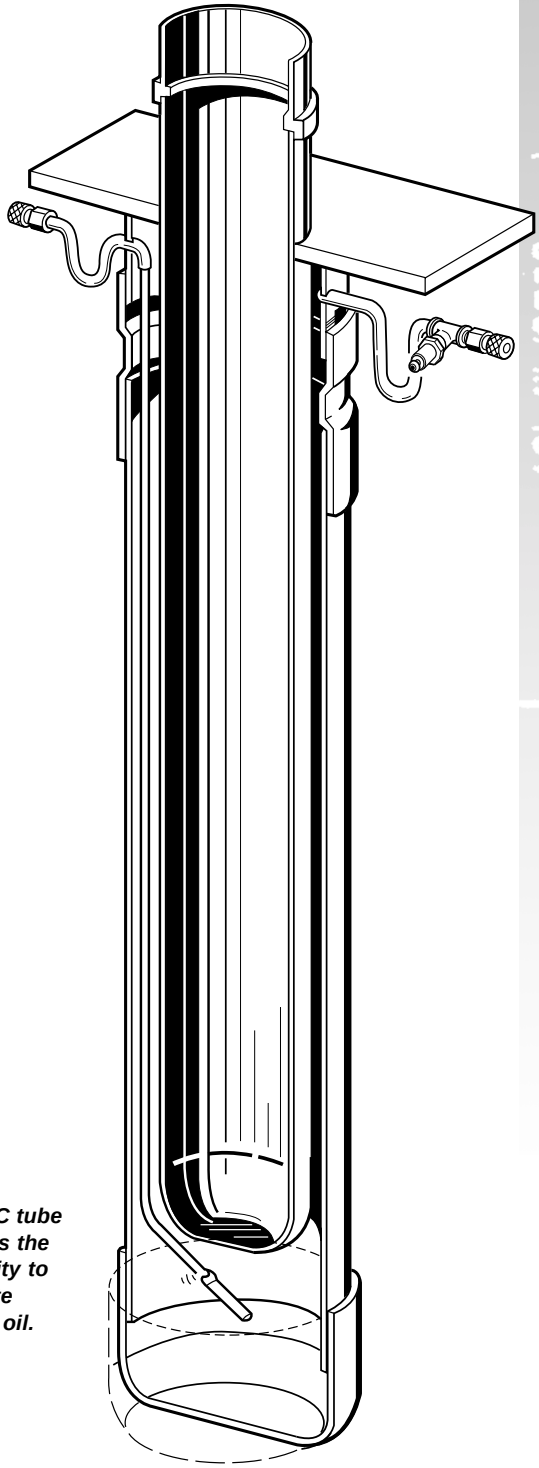

The PVC tube provides the capability to evacuate leaking oil.

Both the LVME (Roped) and the LVML (Holeless) come standard with a low-pressure switch. The switch activates if the pressure in the jack assembly falls below a preset value. Once activated, the switch prevents the elevator from moving down. If the situation is detected when the elevator car is traveling down, the system stops the elevator car and then attempts to move it up to the next available door zone. The switch is mounted in line with the control valve piping.

The low oil level switch, similar in name to the switch mentioned above, is an optional device. If the oil level falls below a set level, the switch cuts off power to the motor, thus preventing the elevator from operating. This switch is mounted in the oil tank and positioned at a point above the pump's oil inlet line. Otis' Remote Elevator Monitoring (REM®) also monitors oil level and notifies Otisline® if the level is too low.

An oil temperature sensor monitors the temperature of the hydraulic oil and makes sure it is within an acceptable range. If the oil falls below the minimum operating temperature of 90 degrees for six minutes, the system activates an oil recycling operation. The recycle operation starts the motor pump, which brings the oil back to the tank. The operation of the motor pump and the friction of the oil from its own natural resistance to flow causes the oil to heat. A complete cycle period is five minutes on, followed by 10 minutes off, until the oil reaches 90 degrees. Conversely, an oil temperature condition above 140 degrees could cause damage to the motor. At this temperature, the sensor alerts the system to stop operation until the oil temperature is again within its operating range. When the REM® product is installed, it records any temperature fault, which your Otis maintenance examiner can use to analyze corrective actions.

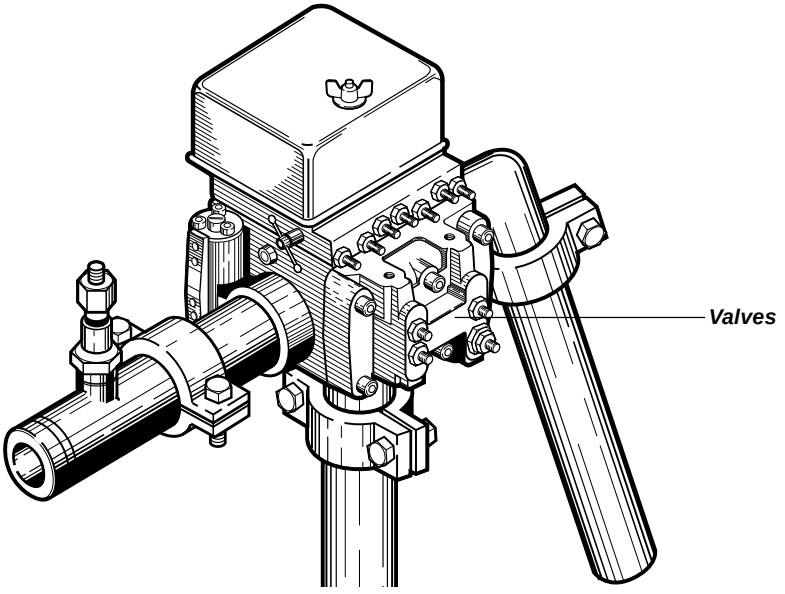

Positioning Equipment

The positioning equipment tells the controller where the elevator car is within the hoistway. Magnetic strips are placed at exact locations within the elevator hoistway and sensors designed to "read" these magnetic strips are mounted to the elevator car. As the elevator moves up and down the hoistway, the sensors activate electrical signals as they pass the stationary magnetic strips. The signals are sent to the controller.

Each of the magnetic strips generates a unique signal. Your controller knows what signal to expect from each of the magnetic strips because that information is stored in memory. The signal tells the controller which floor the elevator is passing or stopped at, its direction of travel, and whether the elevator car floor is level with the landing floor. If the car is not level with the floor, it will re-level to compensate for weight differences as passengers enter and exit.

The physical make-up of positioning equipment includes more than just the magnetic strips and sensors. Other components include the *Reader Tape*, *Reader Box*, *Limit/Stopping Switches*. Each is explained in the paragraphs that follow.

The *reader tape* is actually a thin piece of steel attached to the side of the hoistway rail. It reaches from the bottom to the top of the hoistway. On it, the magnetic strips that help the controller determine the position of the elevator are mounted in precise locations.

The *reader box* contains sensors that "read" the magnetic strips. The reader box is mounted to the top edge of the elevator car and as the car moves in the hoistway, the reader box glides over the reader tape. Position signals are generated and sent to the controller through sensors mounted on a circuit board located inside the box.

The reader box contains sensors that "read" magnetic strips.

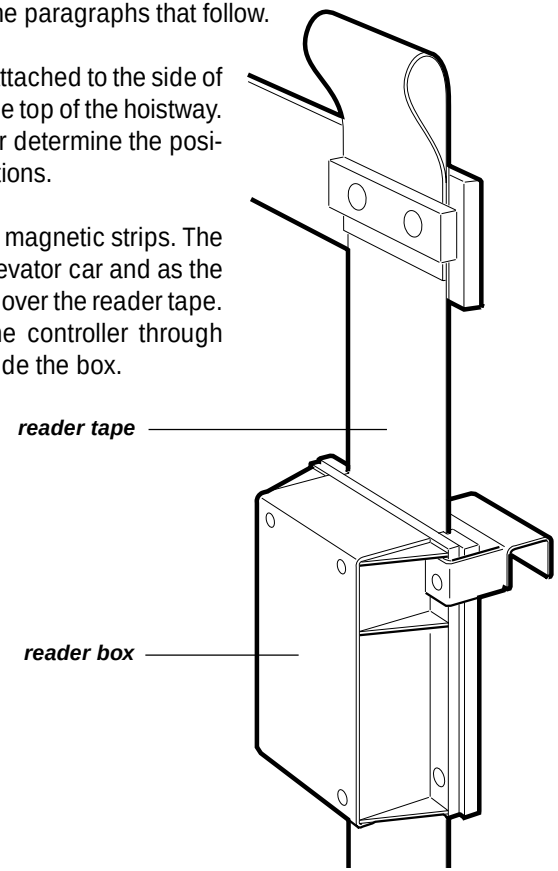

The Operation of Your Low-Rise Elevator

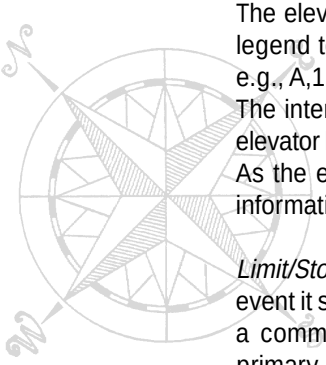

The elevator's positioning function is like that of a road map. If you use the map's legend to identify a location, say Main Street, it provides you with the coordinates, e.g., A,1. This represents the horizontal and vertical markings along the map's sides. The intersection at which the coordinates meet is the location point. Similarly, the elevator has a legend that describes position; in this case stored in computer memory. As the elevator moves, the sensors and magnetic strips provide the intersecting information that, when compared to the information in memory, provides a location.

Limit/Stopping Switches are a backup system to stop the elevator in the unlikely event it should travel beyond the top or bottom landings. This is a safeguard against a communication breakdown in the positioning system. Elevator safety is Otis' primary concern and most systems have been designed with both electrical and mechanical safety measures. When one of these mechanical switches is activated, a series of events take place to prevent an accident. For example, if the elevator is traveling up and goes beyond the top landing the limit/stopping switch will cut power to the motor, restricting the flow of oil to the plunger.

Stopping Switch

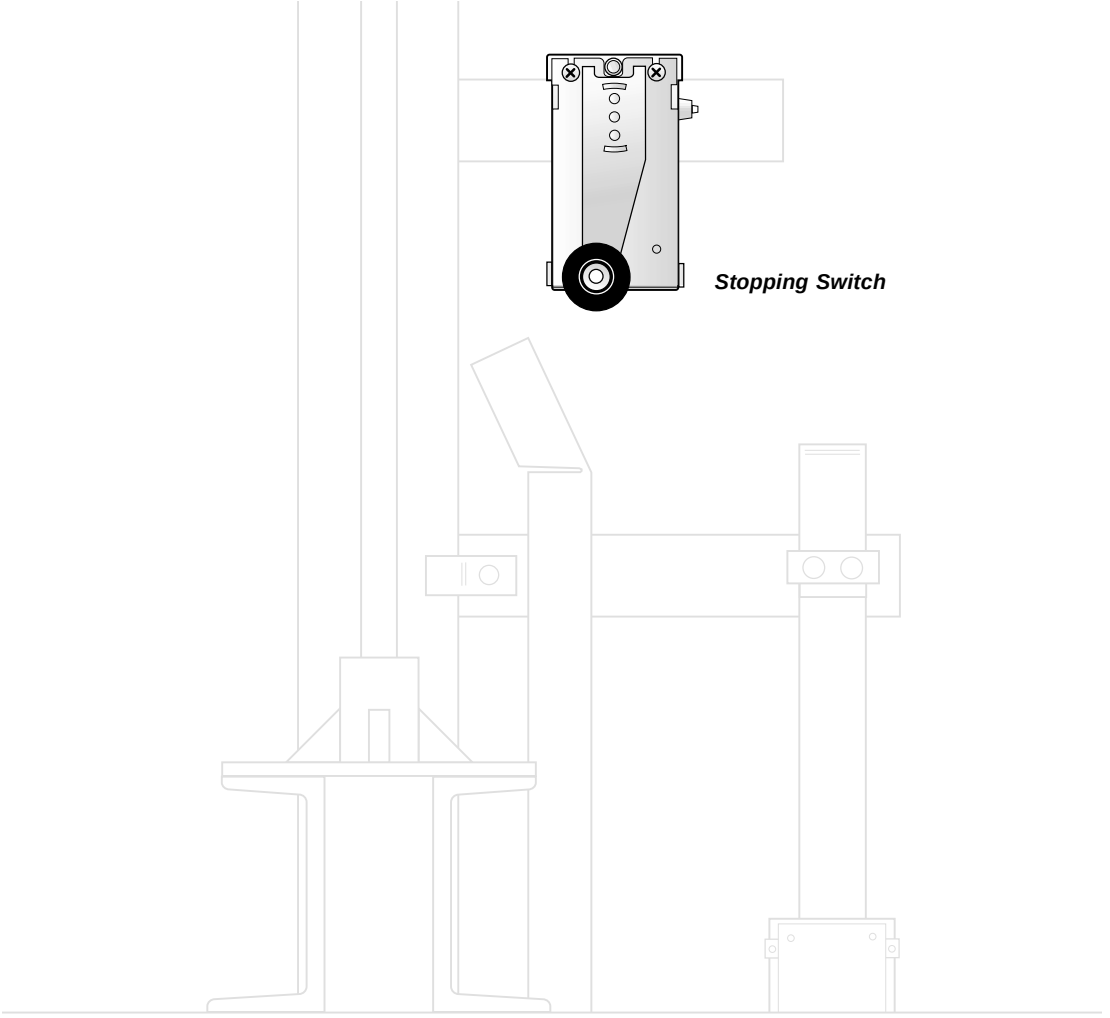

Door Operators and Control Devices

How quickly passengers can enter and exit the elevator is an important consideration. And it is important to you that the elevator answer all elevator calls as safely and rapidly as possible. The speed at which the doors can safely open and close is a contributing factor to achieving this goal. The door operator automatically opens and closes the elevator car door and the hoistway door simultaneously.

The door operator uses a closed-loop control technology advancement. Environmental conditions, such as debris caught in the door closing path or excessive wind in the hoistway, can prevent a door operator from performing 100% efficiently. Closed-Loop control compares the door's actual opening/closing speed to the speed stored in computer memory and then adjusts the door speed accordingly.

Door Operator

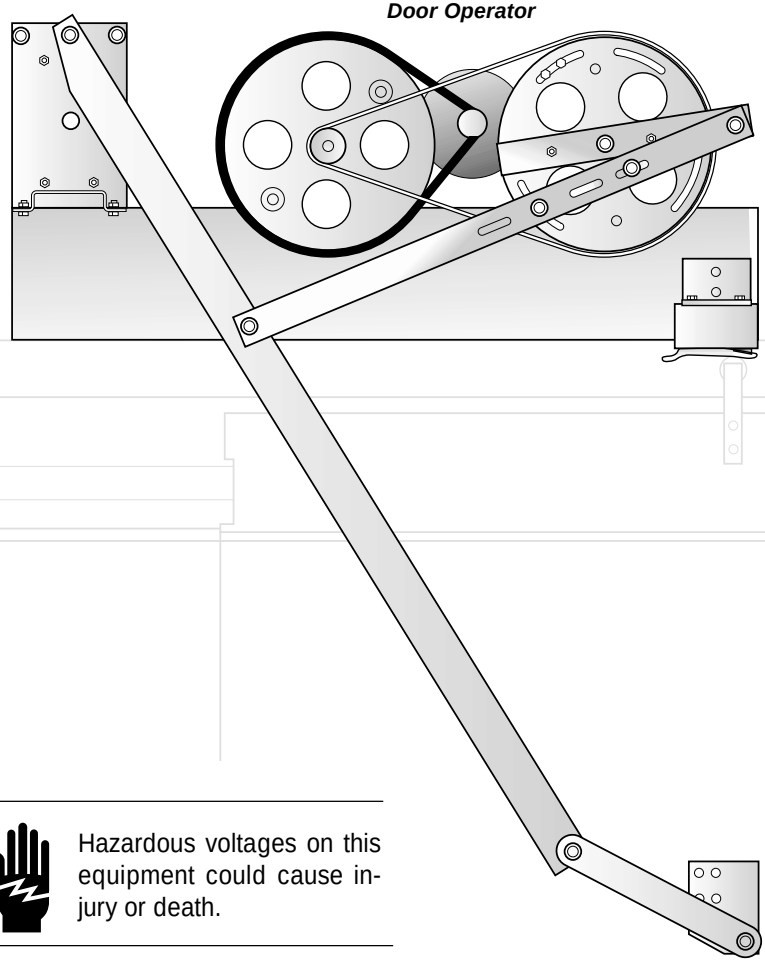

Hazardous voltages on this equipment could cause injury or death.

Your elevator door opens and closes automatically. Linkages and arms are connected to a pulley and motor system that sit on top of the elevator car. These linkages are fastened to the elevator's car door. The operator's output shaft rotates the pulleys, causing movement of the drive arm linkage assembly to open or close the door.

The landing (entrance) door opens in unison with the elevator car door by means of a door vane and interlock system. Each entrance landing is furnished with an interlock and switch. The door vane is fastened to the elevator car door. When the elevator is stopped at a landing and its door starts to open, the vane slides against a roller of the entrance door interlock. This causes the lock to separate from the switch and open the entrance door along with the car door. The detached lock's rollers are spring tensioned against the vane for a secure hold. Remember, the interlock switch is part of the elevator safety chain. When the lock disengages and causes the contacts to open, the elevator is prevented from moving, except for a re-level operation.

If the car doors do not completely close within a predetermined time, an operation called "nudging" initiates. The car will extinguish its hall and car direction lanterns, sound the in-car alarm buzzer, and if part of a group, remove itself from group operation. Then the car will open its doors fully and again attempt to close them. If the car cannot close its doors after three attempts, it will shut down with the doors open. Every two minutes the car will retry closing its doors.

There are three types of door arrangements and a variety of opening widths. The table below provides you with some of their operating characteristics.

DOOR TYPE	OPENING WIDTH	OPENING TIME	CLOSING TIME	NUDGING TIME
Single-Slide	36 inches	3.5	4.0	5.88
Single-Slide	42 inches	4.0	4.5	6.72
Center-Opening	42 inches	2.5	3.0	5.04
2-Speed	48 inches	4.5	5.0	8.40

The door operator currently used with the low-rise family of elevators is the I-Motion operator. It is depicted on the next page along with information detailing its characteristics.

The I-Motion Operator

The Otis I-Motion door operator is designed primarily for low- to mid-rise elevator installations. Its predecessor, the QL, has a long history of consistent and dependable service. The operator can be adapted to all door types with widths between 32 and 48 inches.

The operator uses a reversible motor, which means that the motor can operate in both directions. A motor of this type requires that the current generated by the motor can also flow, in both directions. This is made possible by a device inside the motor called an armature. The armature controls the flow and direction of the current. By manipulating the armature, and therefore the current, it is possible to control the speed and direction of the door operator.

The table below details the characteristics of the I-Motion door operator.

I-Motion Door Operator

Motor Speed	1140 rpm
Armature Voltage	115 volts dc
Total Current	1.6 amperes
DC Power Rating	125 watts
Door Opening Width	32 to 60 inches
Door Entrance Height	84 to 96 inches
Door Thickness	1 ¼ inches

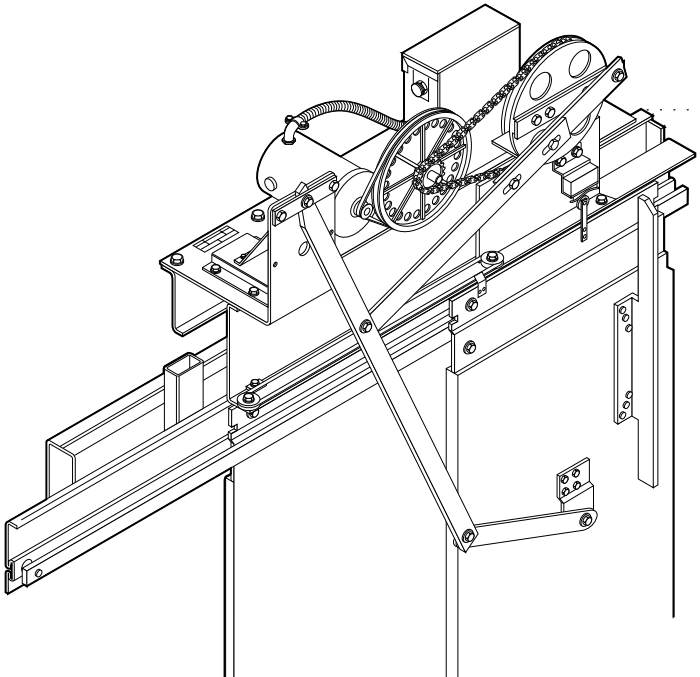

Fixtures

Fixtures are the components passengers use to interact with the elevator. The passenger activates the calls for the elevator car at the landing entrance and at the elevator car operating panels. The fixtures perform additional actions that provide feedback to the passenger. As the elevator car stops at a landing floor, a hall lantern lights a graphic representing the car's direction up or down.

The information below describes the major types of fixtures available for a low-rise elevator, located at the entrance landings (hall fixtures) and within the elevator car (car fixtures), and details the operations they perform.

Hall Panel Fixture Assembly

Located at the entrance landings. Contains buttons, keyswitches, and jewels. Activation, through touch or turning a key, registers a call for the elevator to the landing.

Car Operating Panel

Located in the elevator car. Contains buttons for floor identities, door opening and closing, and alarms. Buttons may be illuminating, raised character, and vandal-resistant. Also contains keyswitches, jewels, and position indicator.

Lantern Fixture Assembly

Located at entrance landings and in the elevator car. Provides passengers with a visual representation of the elevator's direction of travel. Arrival of the elevator car at a landing sounds a lantern chime: once for up direction and twice for down direction.

Position Indicator

Located at entrance landings and in the car operating panel. Provides passengers with a visual identification of the floor position which the elevator is passing or at which it has landed.

Access Fixture Assembly

Usually mounted in entrance jamb and used by a service technician. Contains keyswitch for special operation of zoned access, which allows the elevator to be moved (within defined distance and speed limits) with the landing and car doors open.

Buttons

Types of buttons are illuminating, raised character, vandal-resistant, and alarm. Pressure applied to a button registers an elevator call or other operation, such as opening or closing the doors or sounding an alarm.

Keyswitches

Operates electrical contacts by turning key to set positions. May come in one, two, or three positions and are of spring and non-spring return types. Activating initiates special actions that are described in the pages that follow.

Jewels

Located in both hall and car fixture assemblies. These fixtures are lamp illuminated lenses with printed or graphic information. They inform passengers of various elevator activities operating most often in conjunction with a keyswitch activation.

Emergency Stop

A toggle switch wired within the elevator's safety chain. Activation causes a break in the chain and the elevator will come to a controlled stop. Availability of the emergency stop function is mandatory for all elevators. A keyswitch in place of the toggle type switch is optional.

Braille Character Insert

These are raised letter/graphic markings and braille characters assembled to buttons and used by the visually impaired.

Utility Outlet

Receptacle offering access to 110 VAC power supply.

Audible Signal Device

A device that provides a chime each time the elevator car passes a landing.

Buzzer

A device that provides a continuous alert when firemen's service operation is activated or when the doors are nudging closed.

Telephone/Service Cabinet

Mounted below the car operating panel and contains a communication device-telephone or intercom. A service cabinet contains a speaker and special keyswitches.

Fixtures can perform special features for security, emergencies, or management operations to a single elevator or group of elevators. These are generally *keyswitches* operated by designated persons or emergency personnel, such as firemen. Some of these fixtures are standard equipment, while others are optional or variable and dependent on other features your system may employ.

Fixtures

KEYSWITCH NAME or (FEATURE)	LOCATION	FEATURE SYMBOL (Refer to Full Feature Description)
American w/Disabilities Act Emergency Communications	Hall Panel	ADA
Automatic Car Return	Car Operating Panel	ARD
Car Call Cut-Off	Car Operating Panel	CCO
Car Secure Access	Car Operating Panel	CSA
Car to Lobby	Hall Panel	CTL
Emergency Hospital Service	Car Operating Panel	EHS
Emergency Medical Car Operation	Car Operating Panel	EMK
Emergency Medical Operation	Hall Panel	EMT
Express Priority Service, Hospital	Hall Panel	EPS
Firefighter's Service Phase I	Hall Panel	EFO
Firefighter's Service Phase II	Car Operating Panel	EFS
Generic Group Security		GSEC
Hall Call Cutoff Selected Landings	Hall Panel	HCS
Independent Service	Car Operating Panel	ISC
Park and Shutdown Operation	Car Operating Panel	PKS
Standby Power Operation Automatic w/Manual Override	Hall Panel	EPO
Zoned Access at Bottom Landing	Entrance Jamb	ITB
Zoned Access at Top Landing	Entrance Jamb	ITA
(Card Reader in Car)		CRD
(Cars Parked at Lobby)		CNL
(Double Riser of Hall Button Operation)		DBR
(Hydraulic Card Reader Provisions)		CRP
(Separate Hall Riser)		SRO

The table at left lists these fixtures, giving the keyswitch name and whether it is used at the entrance landing or the car operating panel. Use the feature symbol as a reference to the feature's full explanation on the following. Please note that not all features have an associated keyswitch. Features can occur alone, or in connection with a keyswitch, or as the result of a hard-wired connection and/or software implementation.

Americans with Disabilities Act Emergency Communications (ADA)

Americans With Disabilities Act Accessibility Guidelines, ADAAG (4.10.14) requires that an elevator's communication system must allow for communication by means other than voice. The ADA Emergency Communications feature may be provided to assist the customer in responding to ADAAG if the customer HAS NOT agreed to use the OTISLINE® Handsoff™ telephone or some other "hands free" telephone that provides visual indication of alarm acknowledgment and is connected to an answering service designed to respond to ADAAG.

This feature provides an "Alarm Received" message indicator in the car operating panel and a hall (or lobby) panel fixture having an "Alarm" message indicator, keyswitch, and buzzer. The message indicator and buzzer in the hall fixture are activated by the Alarm Button in the car operating panel. Activating the keyswitch in the hall fixture illuminates the "Alarm Received" message indicator in the car. This feature may also be provided in conjunction with an intercom system specifically designed in accordance with ADAAG.

Use of this feature requires the hall fixture or intercom be continuously monitored by an attendant who is available to take action when an emergency signal is activated.

Automatic Car Return (ARD)

ARD parks the car at a specified landing when there is no further demand. The operation is keyswitch activated and overrides normal zoned parking. Also, the car can be pre-programmed to park at the ARD position with its doors open.

Car Call Cut-Off (CCO)

When activated by a keyswitch, the car no longer answers front or rear car calls. Hall calls are answered normally for all landings. During emergency service operations, the inputs are ignored and car calls are allowed to register normally.

Cars Parked at Lobby (CNL)

In a multi-car group, the number of cars parked at the lobby is an option. The normal condition is one car, but some configurations may require additional cars to handle constant heavy traffic at the lobby.

Card Reader in Car (CRD) - *Card Reader By Others*

When car card reader security is activated, car calls to restricted landings do not register. When a passenger inserts a valid card into the card reader, he or she is allowed to register a car call to one or more restricted landings.

Card Reader in Hall (CRH) - *Card Reader By Others*

When hall card reader security is enabled, hall calls from a restricted floor do not register. A passenger may register a hall call from a restricted floor by inserting a valid card into the card reader. Hall call card reader security has all inputs located on the hall link. This allows a card reader mounted in the lobby, or the implementation of a card reader-type security using keyswitches.

Card Reader Lockdown (CRL)

When this feature is enabled, the car responds only to a hall call from a card reader. When Card Reader in Hall security is activated, the Card Reader Lockdown feature parks the car at a specified landing and shuts it down, removing the car from the group. If the car has been specified to shut down with the doors closed, the car moves to the specified landing, opens its front doors for the maximum hall door time, then closes its doors and shuts down.

Hydraulic Elevator *(Model: LVM)* **Card Reader Provisions** (CRP)

The Card Reader is a non-Otis device. Supporting the device supplied by others, Otis provides four twisted pairs of wires with a second Otis traveling cable terminated behind the car operating panel and machine room. We also provide an interface box in the machine room. We don't provide terminal blocks in the car operating panel or controller for the Card Reader.

Car Secure Access (CSA)

This feature allows each car call button to be secured or cleared. If a car call button is secured, it will not register a call unless a landing access code is correctly entered on the car operating buttons within a predetermined time period after the secured car button is pressed.

Selecting and changing landing access codes is done on each car operating panel using the Car Secure Access keyswitch. Activation of Car Secure Access is done using the Group Secure Access keyswitch located in the hall or lobby.

When Secure Access is activated for the group, the "Group Secured" lamp in the hallway is illuminated. When a car call to a secured landing is attempted, the "Restricted Landing" lamp in the COP is illuminated. This lamp remains illuminated for a predetermined time period, or until a valid landing access code is entered.

Note that landings that are secured by Car Secure Access are available when the car is operating under Independent Service Override (optional) or Firefighters' Service Phase II.

The Car Secure Access is activated by a three-position keyswitch located in the car operating panel. The three positions are CLEAR, SECURE and an unlabeled position. This switch is accompanied by the "Restricted Landing" lamp.

Car-To-Lobby Operation (CTL)

Each elevator has a three-position Car To Lobby keyswitch located in a lobby panel or hall station. The designations are DOORS which is the neutral position; OPEN which calls the car to the lobby, and CLOSE which, when the car is placed on Independent Service, locks the car out of service. Turning the switch to OPEN opens the doors. The car, when returning to the lobby upon operation of the Car To Lobby switch, makes normal car and hall stops.

Double Riser Of Hall Button Operation (DBR)

Double Riser Operation allows two hall buttons at each landing to work in parallel and to illuminate simultaneously. When either of the hall buttons at a landing are pressed, the call is registered.

Firefighters' Service Phase I (EFO)

When a building smoke sensor or a keyswitch located at the designated return landing is activated, the car performs an emergency return to the designated landing. The return operation is in compliance with applicable codes. This feature includes the fireman's service light message indicator (FSL), fireman's hat jewel (SESL), a buzzer in the car, and designation of alternate service landing (ASL).

Passengers are alerted that the car is returning by a buzzer and a message indicator showing "Please Exit When Doors Open" (FSL). In the United States, a Fireman's Hat Jewel (SESL) is also illuminated.

Firefighters' Service Phase II (EFS)

This feature activated by the fire fighting personnel using a keyswitch in the car (ESK), places the elevator under their control. In the United States, this feature includes the call cancel button (CCB) and keyswitch in car (ESK). When the button is activated, all registered calls are canceled and a traveling car will stop at the next landing.

Emergency Hospital Service (EHS)

This operation is initiated by calling a car to a landing with a priority keyswitch in the hall (see Express Priority Service) then activating the Emergency Hospital Service keyswitch in the car. Once the car has been captured for use with the keyswitch in the car, its operation is similar to Independent Service Operation with the exception that Emergency Hospital Service overrides Firefighters' Service Phase I (EFO) while Independent Service does not.

Emergency Medical Operation (EMT) - *See EMK Also*

Activation of the emergency medical hall switch activates the in-car buzzer and illuminates a lamp in the car and hall. This forces the car to cancel car calls, reassign hall calls, and return non-stop to the defined landing. Upon arrival, the doors open and the buzzer is deactivated.

The door remains open until the switch is turned off and the doors have been open for at least 60 seconds. If the medical switch is toggled, this operation remains in effect for at least the 60 second delay. The second phase of this operation can only be activated when the doors are open at the medical landing.

Once the car is on emergency medical operation, fire service operation cannot be initiated, even though the fire service lamp and buzzer are activated. If the car is performing fire service operations, emergency medical operations cannot be initiated, even though the medical lamp and buzzer are activated.

Emergency Medical Car Operation (EMK)

The car automatically enters the emergency medical car operation after the doors are open at the medical return landing. If the emergency medical car switch is not activated within 60 seconds, medical operation is canceled.

To move the car, the emergency medical car switch needs to be activated. Prior to activation, the door cannot be closed and car calls cannot be registered. An active car switch allows car calls to be registered, which automatically closes the door and moves the car to the target landing. At the target landing, the door opens and remains open until another car call is registered. The door close button has no affect on this operation.

If the car medical switch is deactivated away from the medical return landing with the doors open, the car remains at the landing and disallows calls or the door to be closed. The car must be returned to the medical landing and the emergency medical car switch deactivated to remove the car from emergency medical car operation. Once the car is on emergency medical car operations, fire service operations cannot be initiated, even though the fire service lamp and buzzer are activated.

Standby Power Operation (EPO) - *Automatic with Manual Override*

This operation automatically returns each car to a designated landing when the system is switched to standby power. One or more cars are returned at a time. Preference is given to loaded cars over empty cars in order to reduce passenger waiting times. A car must respond by beginning to move toward the designated landing within 60 seconds. If a car does not respond, it is automatically placed in a "Not Available" mode, while other cars are moved. If a car did not return to the designated landing on the first try, a second attempt is made. If the second attempt is not successful, the car remains in "Not Available" mode and can only be moved manually. Once each car has returned to the designated landing, the doors remain open for a predetermined amount of time.

When all cars have successfully returned to the designated landing or have attempted to move twice, automatic selection of the car(s) to run on normal operation begins. The priority of selection is as follows:

1) Car(s) on Firefighters' Service Phase II.
2) Car(s) designated by contract to be selected.
3) First available car beyond the car(s) designated by contract.

If a car selected for normal operation under standby power is delayed for 60 seconds, the car is placed in "Not Available" mode and another car is selected for normal operation based on the priorities listed above.

Manual Override of Standby Power Operation is achieved by a manual input for each car via a strip switch. A manually selected car is run either in a return operation to a designated landing or in normal operation under standby power. If a manually selected car has not yet returned to the designated landing, it will perform this operation first, then immediately go into normal operation.

If a manually selected car is delayed, no other car can be selected in the group unless it is manually selected. If car selection is changed by Manual Override while a car is running in return or normal operation under standby power, the newly selected car is not permitted to run until the car that had been running has stopped, opened its doors, and gone into the Standby Power Wait state.

The number of cars that can operate simultaneously under standby power is designated by contract and the standby power supply must be sized accordingly.

Express Priority Service (EPS) - *Hospital*

Express Priority Service is activated with a keyswitch at each landing requiring this service. The car able to respond in the shortest time answers the registered call, after canceling prior car calls. When the car reaches the landing registering the call, one of the following occurs:

1) If no car call is entered within a preset time, the car will close its doors and resume normal operation.

2) If a car call is entered and the Door Close Button is pressed, the car will serve the car call then resume normal operation.

   This operation can be modified so that the car remains in Express Priority Service until no further car calls are present. When no car call is entered within a preset time, the car will close its doors and resume normal operation.

3) If an Emergency Hospital Service keyswitch is activated, the car will switch to Emergency Hospital Service (please see the Emergency Hospital Service description) until the keyswitch is deactivated. At that time, the car will resume normal operation

Generic Group Security (GSEC)

Utilizes keyswitches or clock inputs to cut off car and hall calls on specified cars at specified landings through a software matrix.

Hall Call Cut-Off-Selected Landings (HCS)

Upon activation of any hall call cutoff keyswitch, hall calls are disabled and car calls are handled normally.

Independent Service (ISC)

Activation of the Independent Service switch removes a car from normal group operation, permitting it to respond only to calls registered on car buttons and making the door close operation subject to the Door Close Button. A car operating on Independent Service does not respond to hall calls. Car and hall lantern operation is suspended.

The car independent service switch provided under ISC can be complemented with a hall independent switch, if specified. Independent Service includes a Call Cancel button. When the button is activated all registered calls are canceled and a traveling car stops at the next landing.

Park and Shutdown Operation (PKS)

Activation of the Park and Shutdown (PKS2) keyswitch parks the car at the lobby. When the PKS2 keyswitch is activated, the car removes itself from group operations. If the car has pending car calls, it answers any remaining car calls. Once the car has no further demand, the car travels to the lobby and parks with the doors closed. The car remains out of service until the PKS2 keyswitch is placed in the OFF position.

Zoned Access at Upper Landing (ITA)

This feature, activated by a keyswitch typically located in the entrance frame, permits the operation of the car with the hoistway door at the landing and the car door or gate open, to permit access to the top of the car. Movement of the car away from the landing is limited or ("zoned") as required by applicable codes.

Zoned Access at Bottom Landing (ITB)

This feature, activated by a keyswitch typically located in the entrance frame, permits the operation of the car with the hoistway door at the landing and the car door or gate open, to permit access to the hoistway pit. Movement of the car away from the landing is limited or ("zoned") as required by applicable codes.

Separate Hall Button Riser (SRO)

This operation uses two sets of hall buttons (or risers): a primary riser for normal group operation and a separate riser for providing expeditious service to certain landings during certain periods of the day. Separate riser operation is initiated by a keyswitch. When activated, those cars connected to the separate riser answer hall calls registered on the separate riser and ignore hall calls on the primary riser.

Low-Rise Models

Earlier in this chapter you read about the lifting technologies employed by each of the three Otis low-rise elevator models. Your model fits best with your building requirements. The following information provides you with the details of the system you chose so that you can have a better understanding of how the system works and can make informed decisions about maintenance, repair, and troubleshooting.

There are three primary jack assembly arrangements used for low-rise elevator systems. Each is designed to best suit your building needs and the needs of the surrounding environment.

JACK ARRANGEMENT/ (ELEVATOR MODEL)	HOLED (LVM)	HOLELESS (LVML)	ROPED (LVME)
Quantity of Jacks	1	2	2
Jack Cylinder Mount Position	Below Ground Level	Foundation Floor Level	Foundation Floor Level
Minimum Pit Depth	4'-0"	4'-0" + 1" per 1" of rise >13'-7" (to max. 10'-5")	4'-0"
Maximum Rise	60'-0"	20'-0"	60'-0"
Jack/Elevator Car Lift Ratio	1:1	1:1	1:2

LVM - The Holed Low-Rise Elevator System

Otis' LVM low-rise elevator is primarily for installations no higher than 60 feet, with moderate car speeds (up to 150 feet per minute). Its compact design means the LVM requires a minimal amount of machine room space. The LVM also features sealed PVC protection surrounding the wall and bottom of the in-ground cylinder. This substantially reduces the risk of equipment corrosion or environmental contamination from oil or water that may have leaked into the space between the PVC and cylinder.

The jack assembly cylinder head sits just above the building foundation's floor. The cylinder tube is sunk beneath the floor into the ground. The depth of the cylinder is equal to the total rise of the elevator plus other allowances.

The table below provides additional LVM information.

RATED DUTY (lb.)	SPEED (feet/min)	HOISTWAY WIDTH	HOISTWAY DEPTH	MAXIMUM RISE	MINIMUM DEPTH OF PIT	CAR DOOR WIDTH
2000	100/125/150	7'4"	5'9"	60'0"	4'0"	3'0"
2100	100/125/150	7'4"	5'9"	60'0"	4'0"	3'0"
2500	100/125/150	8'4"	5'9"	60'0"	4'0"	3'6"
3000	100/125/150	8'4"	6'3"	60'0"	4'0"	3'6"
3500	100/125/150	8'4"	6'11"	60'0"	4'0"	3'6"
4500	100/125/150	7'5"	9'8"	60'0"	4'0"	4'0"
5000	100/125/150	8'2"	10'3"	60'0"	4'0"	4'6"

12' 4" (3759mm) TOTAL CLEAR HEIGHT *

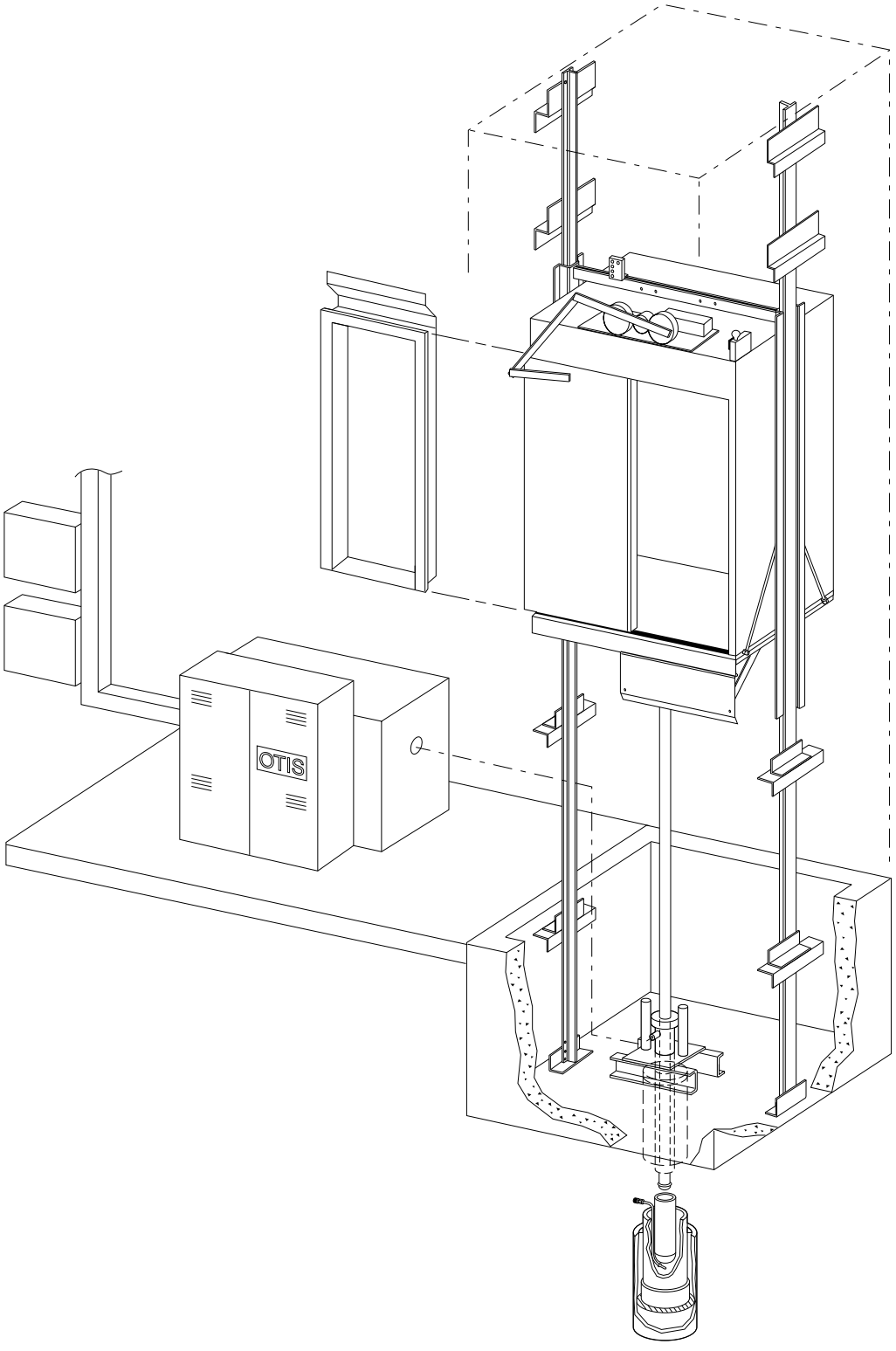

LVML - The Holeless Low-Rise Elevator System

Otis LVML low-rise elevator is primarily for installation no higher than 20 feet, with moderate car speeds (up to 125 feet per minute). This arrangement requires two jack assemblies. They are mounted directly to the foundation floor eliminating ground drilling.

The holeless low-rise elevator system was designed to eliminate some of the issues surrounding traditional holed installations. By removing the hydraulic plunger from within the ground, the opportunity for environmental impact has been reduced. In addition, you save considerably on the expense of drilling the hole used in traditional installations.

The LVML uses many of the same components of the LVM product. The controller, motor, pump and positioning equipment remain the same. The machine room is unchanged except for size variances because the holeless system requires different pit widths and depths. Primarily, these requirements are based upon the fact that the jack assembly is completely above ground.

The table below provides additional LVML information.

RATED DUTY(lb.)	SPEED (feet/min)	HOISTWAY WIDTH	HOISTWAY DEPTH	MAXIMUM RISE	MINIMUM DEPTH OF PIT	CAR DOOR WIDTH
2000	100/125	7’4”	5’9”	20’0”	4’0”	3’0”
2100	100/125	7’4”	5’9”	20’0”	4’0”	3’0”
2500	100/125	8’4”	5’9”	20’0”	4’0”	3’6”
3000	100/125	8’4”	6’3”	20’0”	4’0”	3’6”
3500	100/125	8’4”	6’11”	20’0”	4’0”	3’6”
4500	100/125	7’7”	9’8”	20’0”	4’0”	4’0”
5000	100/125	8’4”	10’3”	20’0”	4’0”	4’6”

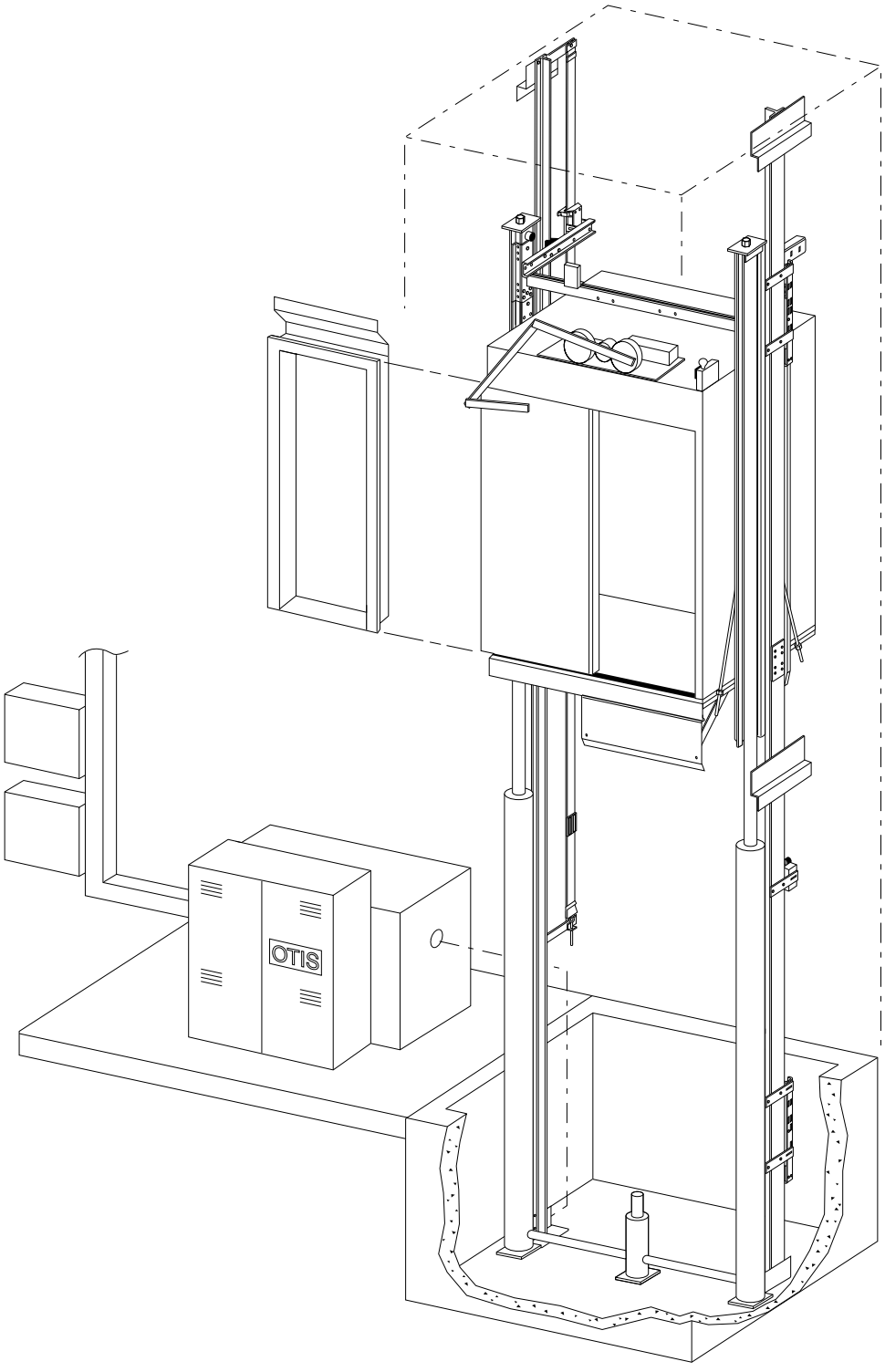

12' 4" (3759mm) TOTAL CLEAR HEIGHT *

LVME - The Roped Low-Rise Elevator System

The roped arrangement uses the holeless jacks and a roped drive system. Otis' LVME low-rise elevator is primarily for installation no higher than 60 feet, with moderate car speeds (up to 150 feet per minute). The roped arrangement allows for an elevator rise twice the length of the jack cylinders. The drawbacks of hole-drilling cost and possible future ground contamination problems are eliminated.

The Roped Low-Rise Elevator, LVME, uses many of the same components of the LVM product. The controller, motor, pump, positioning equipment, and architectural aspects remain the same. The machine room is unchanged except for size variances because the roped system requires different pit widths and depths. Primarily, these requirements are based upon the fact that the jack assembly is completely above ground.

The table below provides you additional information regarding the LVME.

RATED LB. (duty)	SPEED (feet/min)	HOISTWAY WIDTH	HOISTWAY DEPTH	MAXIMUM RISE	MINIMUM DEPTH OF PIT	CAR DOOR WIDTH
2000	100/125/150	8'0"	5'9"	60'0"	4'0"	3'0"
2100	100/125/150	8'0"	5'9"	60'0"	4'0"	3'0"
2500	100/125/150	9'0"	5'9"	60'0"	4'0"	3'6"
3000	100/125/150	9'0"	6'3"	60'0"	4'0"	3'6"
3500	100/125/150	9'0"	6'11"	60'0"	4'0"	3'6"
4500	100/125	7'7"	9'8"	60'0"	4'0"	4'0"
5000	100/125	8'4"	10'3"	60'0"	4'0"	4'6"

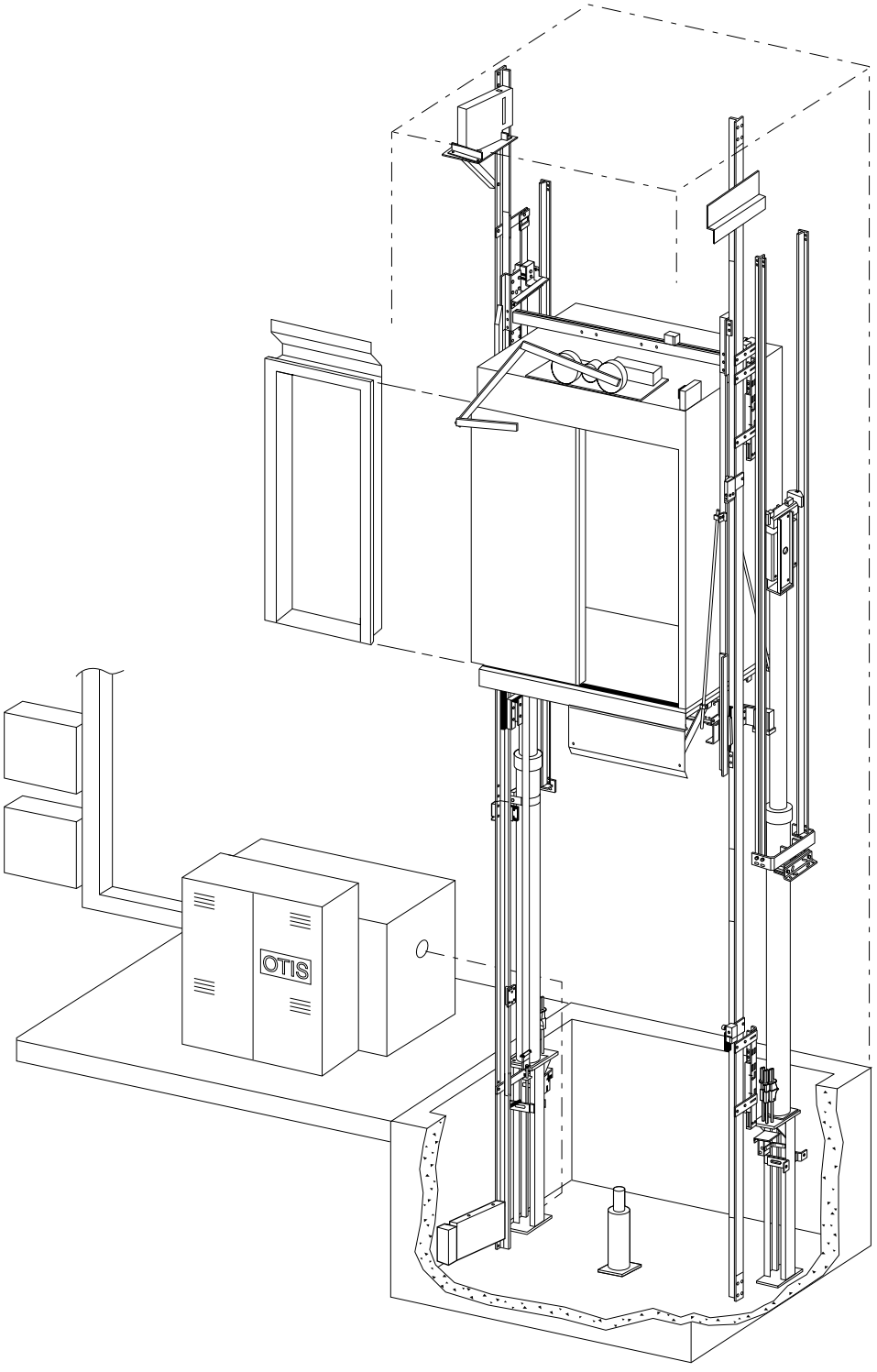

12' 4" (3759mm) TOTAL CLEAR HEIGHT *

General Descriptions

The machine room houses the power to move the elevator car up and down the hoistway. It also is home to the decision making equipment, your controller. This room can also house the optional equipment of the emergency return unit and other products. The principle components are the oil tank, motor, pump, valve, controller, and jack assembly.

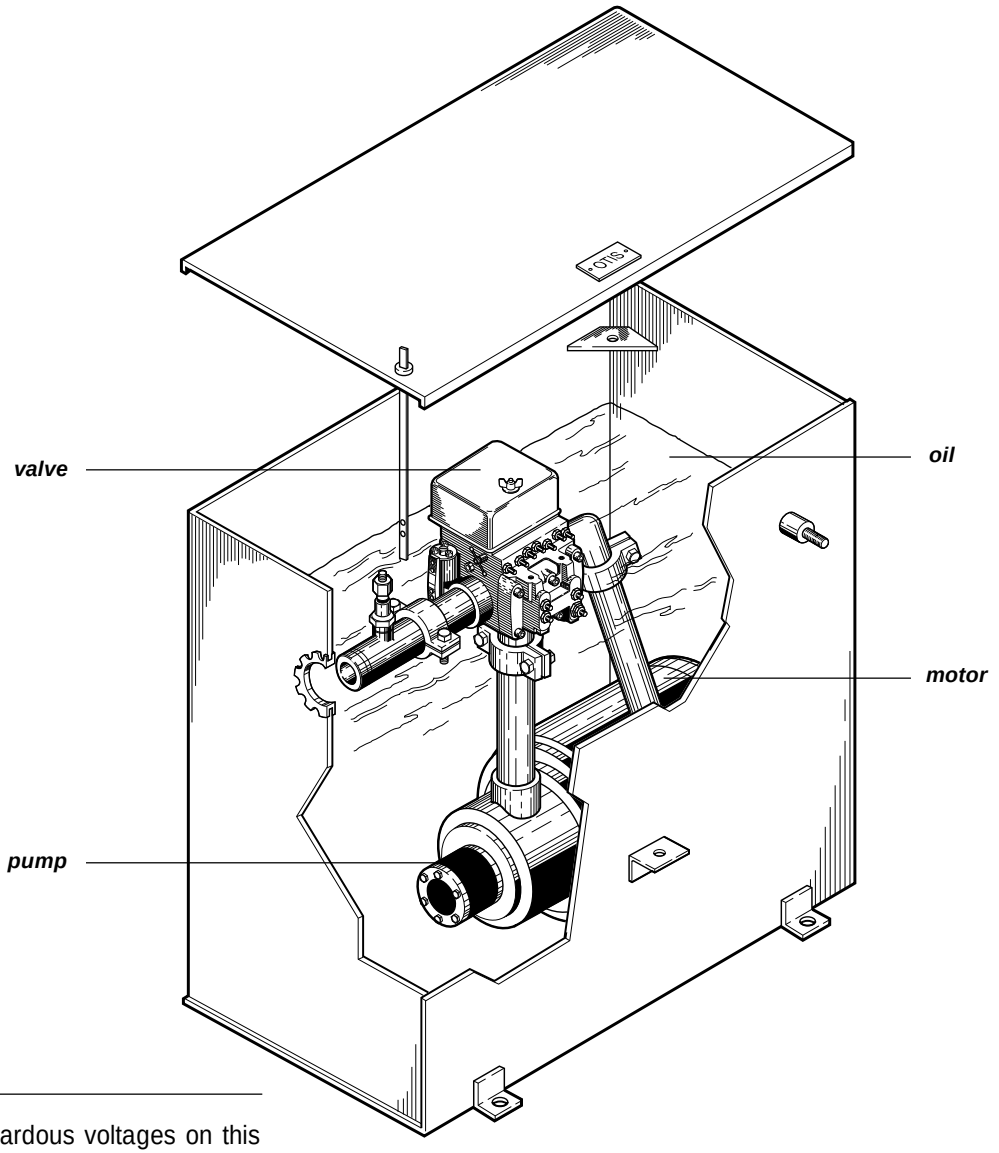

Hazardous voltages on this equipment could cause injury or death.

Within the hoistway, the principle components are the reader box, the reader tape, magnets, and switches.

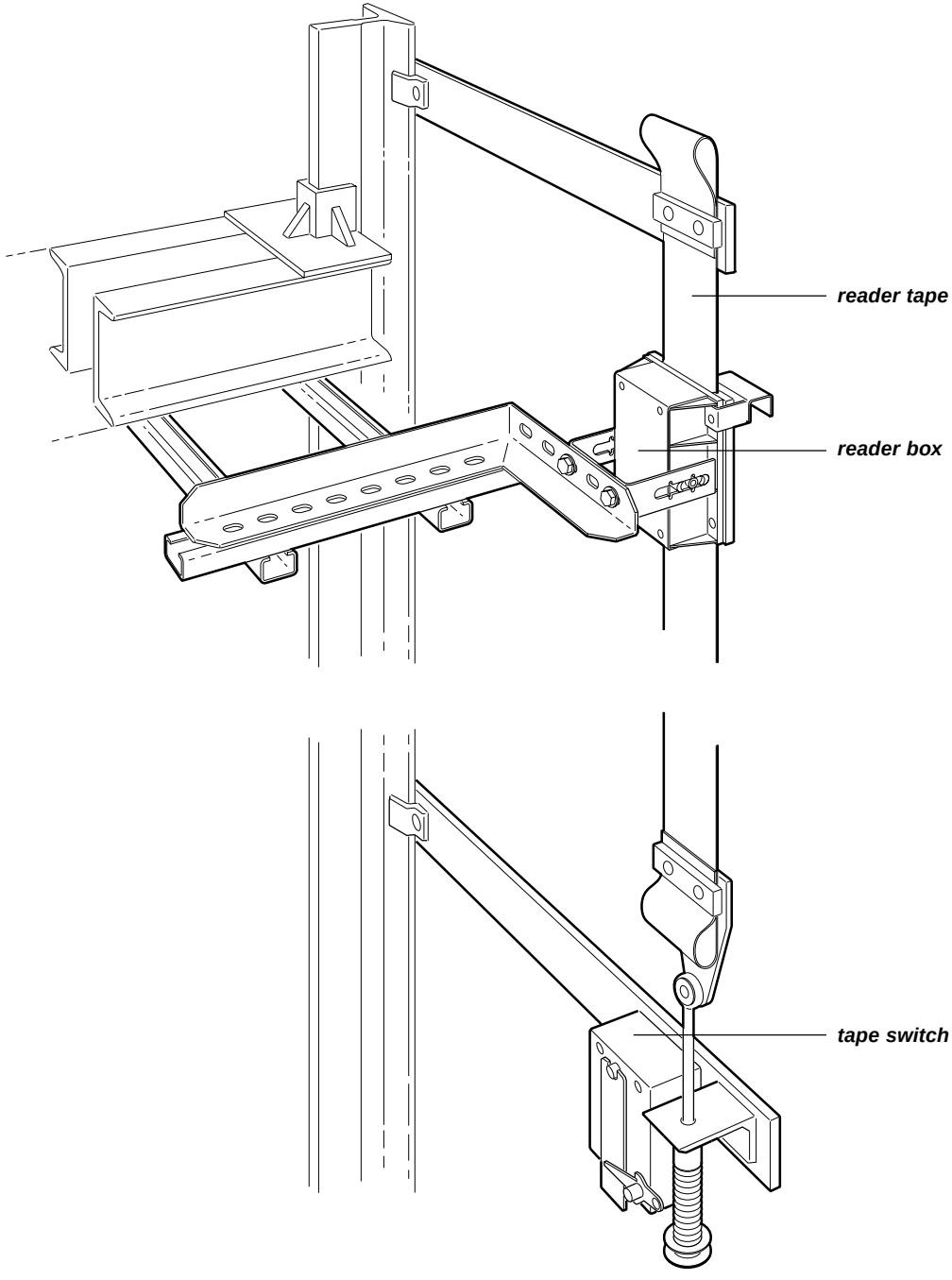

The elevator car comprises several items, including the carframe and platform, cab assembly, car operating panel (not shown), and the door detector (not shown).

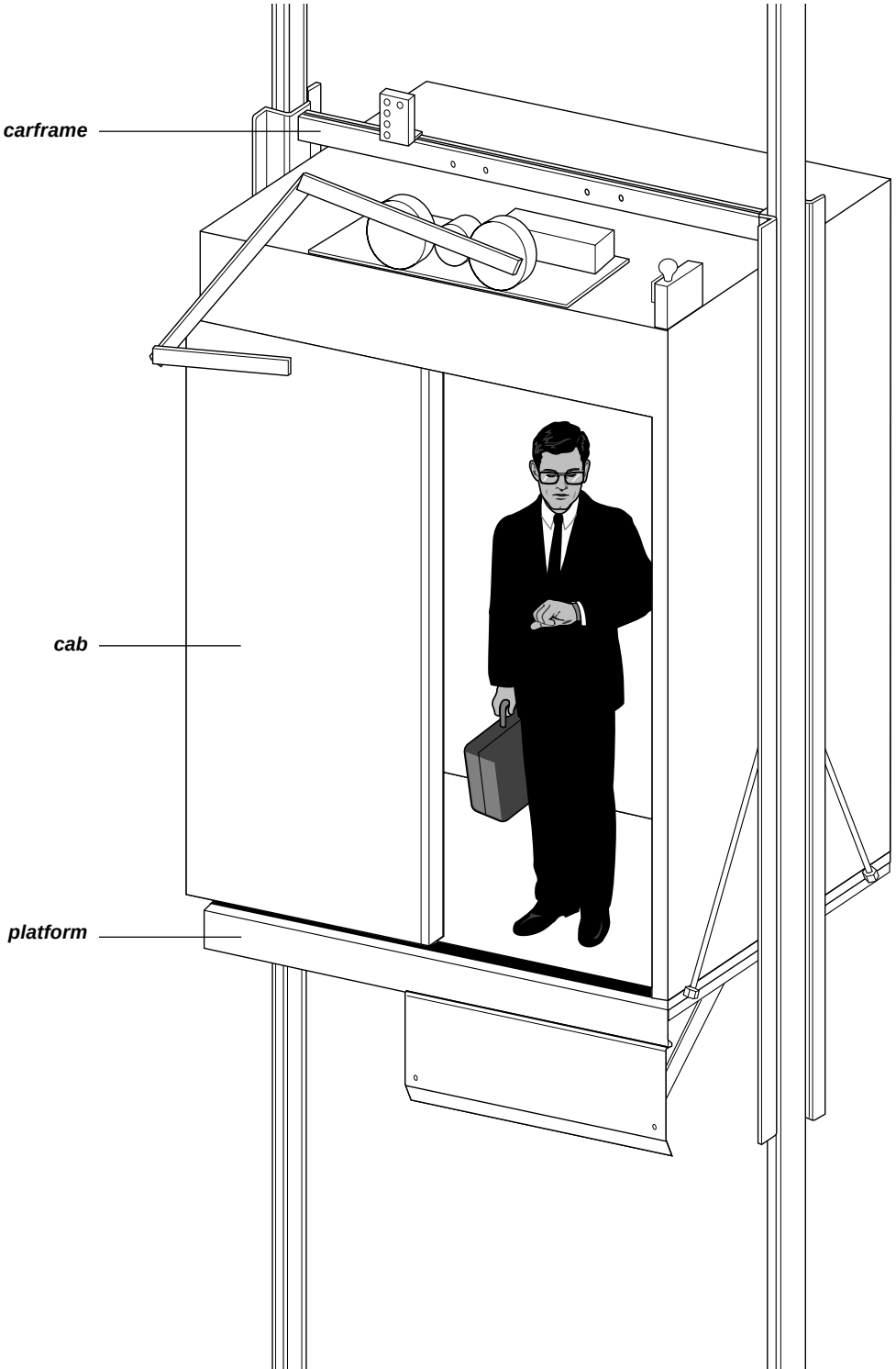

Chapter 4: Otis Maintenance and Service

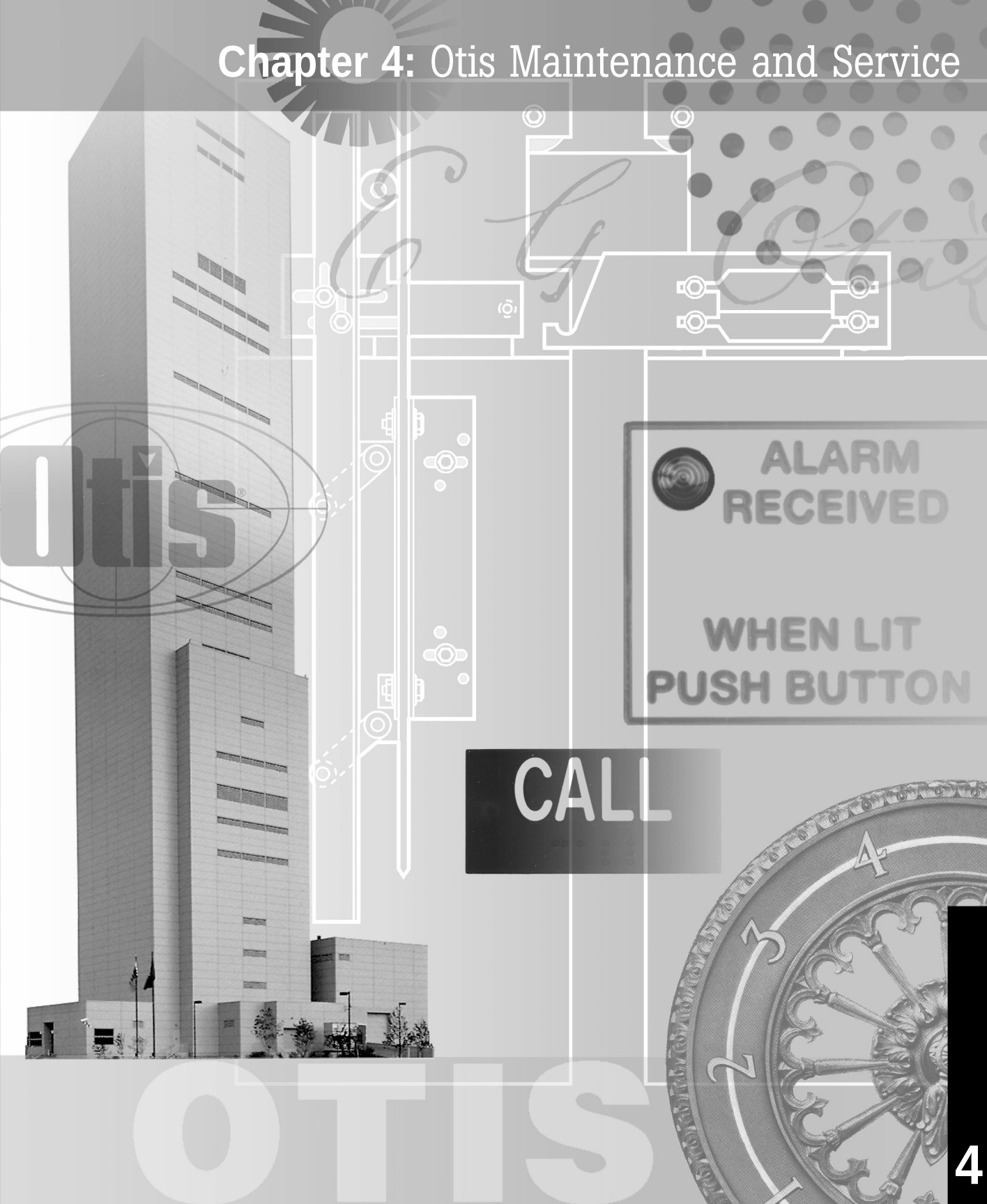

Chapter 4: Otis Maintenance and Service

Elevator and escalator maintenance is more than just fixing a mechanical problem after it happens. These machines are a significant investment for you, so maintenance is more about protecting and extending the life of that equipment.

Otis utilizes the vast knowledge it has accumulated over the years as the world's leader in the elevator and escalator industry to extend elevator life. That means developing not only better, longer-lasting products, but also the technology to scrutinize their performance, and the technology to get valuable information into the hands of well-trained mechanics.

That's why Otis has invested in and created performance systems such as the **Otis Maintenance Management System** (**OMMS**[SM]), which is used in North America. OMMS[SM] is a predictive maintenance system that tracks elevator usage to schedule service and parts replacement before components fail. It's designed to ensure optimum performance, equipment life, and minimal downtime.

OMMS[SM] is customized for each building, taking into account building environment, equipment type, elevator usage, and component life. Mechanics can service equipment at key intervals and replace worn-out parts before a failure occurs. This reduces callbacks, emergency repairs, and elevator "down-time."

All field employees use "best practice" work processes developed and continuously improved by Otis through years of experience. They can easily access support documents that tell them the most efficient way to tackle a job and complete it with minimal impact on service.

REM® uses advanced data communications and microprocessor technology to provide elevator monitoring.

Another technological advance is **Remote Elevator Monitoring** (**REM**®). REM® uses advanced data communications and microprocessor technology to provide 24-hour, on-site elevator monitoring. Sensors located in key areas of elevator operation provide diagnostic data in an effort to discover problems before they cause a shutdown.

Because REM® constantly monitors an elevator's performance, it can identify imminent problems that are fixable during a routine maintenance visit. If it finds a major problem, REM® automatically sends a message to a customer care center and an Otis service mechanic is dispatched within minutes of the initial call.

Traditionally, a mechanic is called to a site after an elevator is out of service or is malfunctioning. Then he initiates a time-consuming process to pinpoint the cause of the problem. Now mechanics begin solving problems as soon as they get to a building because they've accessed detailed data through REM® before arriving at the site. The result is a faster diagnosis resulting in elevators quickly returned to service. For more information about REM® , please see Chapter 3.

1 800 REM LOG

Ultimately, Otis is committed to information and the technology necessary to make that information easily accessible to all of its associates maintaining customer equipment throughout the world. Tools and technology are coming together to make a difference. In North America, for instance, a tool such as **OtisWave**, a fully searchable online library of technical documents, is a sign of Otis' strong commitment to providing up to date information to our mechanics and field personnel. Otis service personnel in North America now access information faster and easier using OtisWave's library. A maintenance supervisor at a work site needs only a few seconds on his laptop computer using OtisWave's powerful search function to identify a specific machine or part, review a maintenance routine, or find replacement part numbers. The minutes and hours spent searching through thousands of pages of paper documents in the office are history.

In addition to the merging of tools and technology, Otis continuously strives to provide exceptional service to our customers. Evidence of this commitment can be found in facilities such as **OTISLINE®**. OTISLINE® is a 24-hour-a-day, centralized communications center that enables you to contact Otis at any time of the day or night. Customer service representatives are available at toll-free phone numbers to provide a prompt and professional response. There are a number of these call centers worldwide, each with responsibility for a geographical area.

Approximately 5.7 million calls - whether for service or inquiries - are handled annually through these call centers. Customers reach an Otis representative in an average of nine seconds, and in the cases where service is required, have their equipment back in service within an average of two-and-a-half hours after the initial call.

Otis is also embracing the opportunities the Internet offers business today. Several initiatives allow customers to inspect performance information, select modernization components, or examine architectural requirements over the Internet.

Otis is technologically driven to develop products that improve an elevator's or escalator's performance, safety, and reliability. Many of these products are incorporated directly into production at the factory for new elevator systems or are added to older equipment, to "modernize" it.

Chapter 4: Otis Maintenance and Service

Building owners may need an Otis modernization for several reasons:

- Enhance building value
- Increase tenant satisfaction
- Accommodate building population changes
- Meet new code requirements
- Improve building aesthetics
- Compete with other buildings
- Replace obsolete equipment

Modernization can be customized to one item such as a controller or combined between items such as controller, door operator, fixtures, elevator cab, or door detector.

Among the key elements in Otis' overall maintenance program are its customer service centers and testing facilities. For example, the **Otis Service Center** (OSC) in Bloomfield, Connecticut, provides maintenance, repair, and modernization services to all Otis elevator and escalator customers throughout the U.S. and Canada. The 220,000-square-foot office/warehouse stocks, manufactures, and sources elevator and escalator parts. Processor board repair and testing are also performed at OSC.

The Otis Service Center is the key element in the overall Otis maintenance program.

Another example is the **Service Parts Warehouse** in Minto, Australia-a facility that serves a similar function in Australia and Otis' designated Asian Pacific Area (APA). It offers engineering drawings, wiring diagrams, parts information, maintenance and modernization updates, and spare parts documentation to Otis customers in that region of the world.

The **European Parts Center** (EPC) in Roissy-en-France outside of Paris, plays a role similar to Otis Service Center and the Service Parts Warehouse. The EPC stocks and delivers elevator and escalator parts for Otis' equipment being maintained throughout Europe, Africa, and the Middle East. It is yet another example of Otis' commitment to the maintenance business and delivery of products to its customers.

The **Otis Test Tower** and **Quality Assurance Center** (QAC) in Bristol, Connecticut, serve as examples of Otis' commitment to minimizing elevator/escalator downtime through continuous improvement. A combination of "real world" testing and computer simulation at these facilities means faster, quieter, more efficient, and reliable equipment for Otis customers. Engineers not only test products, but also perfect installation and service methods before they are implemented in the field.

Finally, Otis offers many forms of scheduled preventative maintenance and a full spectrum of repair services designed to extend the life of elevator and escalator equipment. Monitoring and maintaining equipment properly also allows for the safest, most reliable performance possible. Please contact your Otis sales or customer service representative for more information about these services.

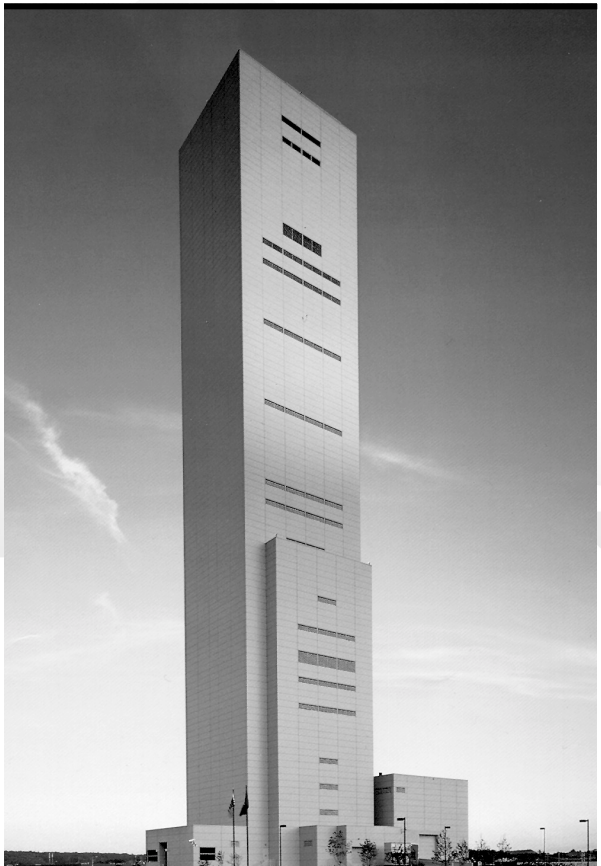

The Otis Test Tower has 14 elevator hoistways of varying rises and a large bay for running escalators.

Appendix A

Continued from Previous Page
GROUP RSL DISPLAY
GO4
Same as Car RSL Functions
MCSS INSTALLATION PARAMETER SETUP
TOP LANDING 002
Scroll
Bottom Landing,Bypass Switch,Code
Run Up,Valve Delay,Up Level,Off DL,Stall
Time,Stall Wait,Max Stalls Norm,Max Stalls
Insp,Position Sensor,Emer Stop,HLVL,ROS
Enabled,Recycle Timer 1,Recycle Timer 2,LPS
Enable,Los Enable,ERU Enable,J Enable,OLT
Enable,ADV Door Open,ADV Door Time,Invert
SVT OCSS Comm
DCSS INSTALLATION PARAMETER SETUP
Front Door Type 005
Scroll
Rear Door Type,Front Timer 1,Front Timer
2,Front Timer 3,Front Timer 4,Front Timer
Rear Timer 1,Rear Timer 2,Rear Timer 3,Rear
Timer 4,Rear Timer 5,Max Door Safety
at DFC Opt,Invert DOL,Invert DCL,Inver
RDOL,Invert RDCL,Late DOB Timer
POSITION INDICATOR SETUP
POS 000 R 002 2
Scroll
POS 000 L 00x
POS 001 R 00x
etc.
ENTER CAR CALL DISPLAY
ENTER CAR CALL
Scroll
Return to Power on Display
OCSS Operational Modes
EDIT MCSS PARAMETERS
002
(Scrolling Stopped)
INCREASE
003
DECREASE
001
Accept Changes and Exit
EDIT DCSS PARAMETERS
005
(Scrolling Stopped)
INCREASE
006
DECREASE
004
Accept Changes and Exit
EDIT PI CHARACTERS
002
(Scrolling Stopped)
INCREASE
003
DECREASE
001
Accept Changes and Exit
ENTER CAR CALLS
001
INCREASE
002
DECREASE
Top
PWR BAT HRT S2 S3
Service Display
Service Tool
RING RSL
P8
RESET
Baseline Prom
Contract Prom
U8
U26
LSAT
GSTAT
UPRDY
DNRDY
MTCI
MIIS
MMIS
MNOR
CDGL STAT
DZ
UADS
LADS
AC Input Indicators
P12
P13
P14
P16
P17
CES

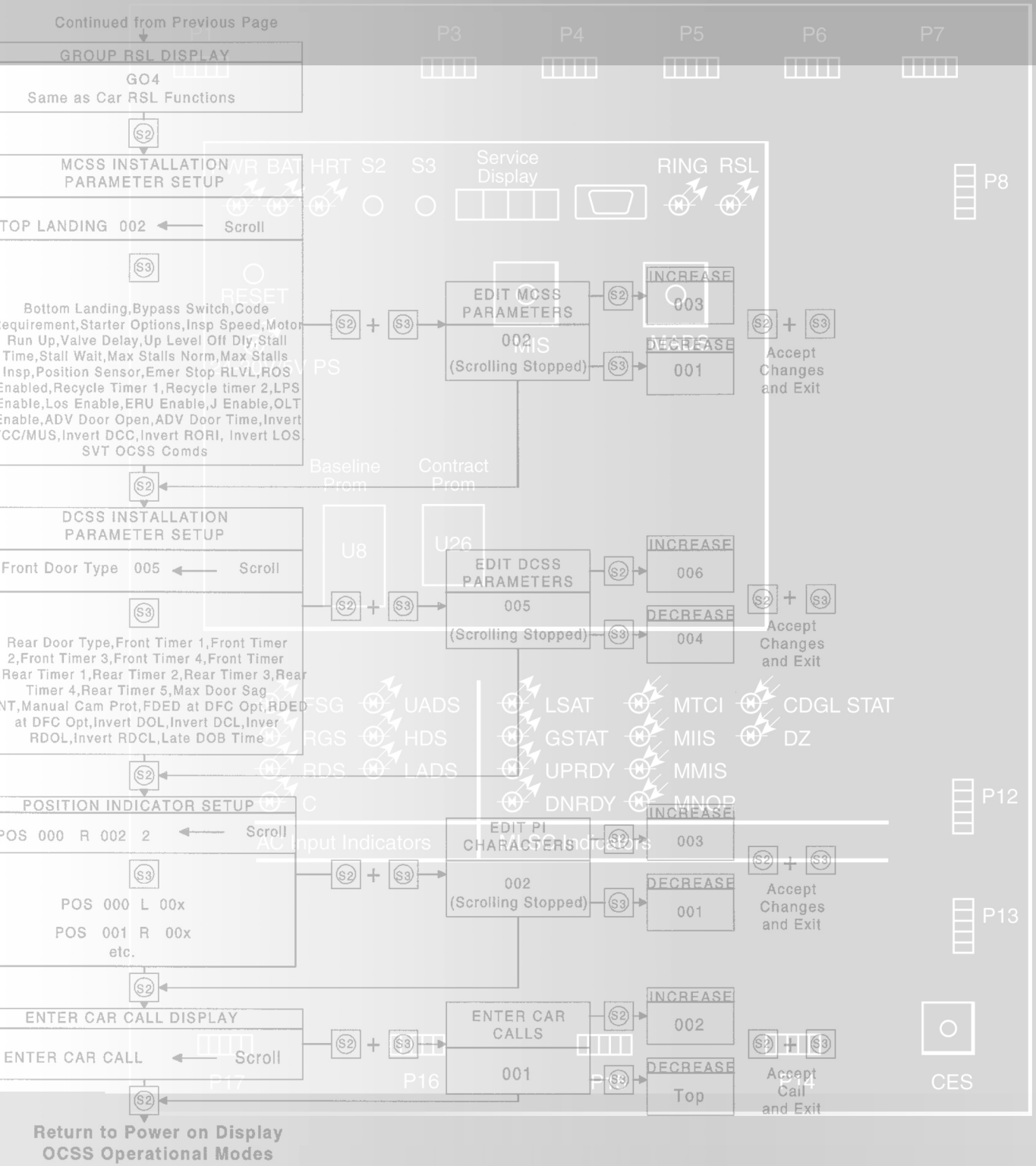
Continued from Previous Page
GROUP RSL DISPLAY
GO4
Same as Car RSL Functions
S2
MCSS INSTALLATION PARAMETER SETUP
TOP LANDING 002
Scroll
S3
Bottom Landing,Bypass Switch,Code Requirement,Starter Options,Insp Speed,Motor Run Up,Valve Delay,Up Level Off Dly,Stall Time,Stall Wait,Max Stalls Norm,Max Stalls Insp,Position Sensor,Emer Stop RLVL,ROS Enabled,Recycle Timer 1,Recycle timer 2,LPS Enable,Los Enable,ERU Enable,J Enable,OLT Enable,ADV Door Open,ADV Door Time,Invert DCC/MUS,Invert DCC,Invert RORI, Invert LOS SVT OCSS Comds
S2
S3
EDIT MCSS PARAMETERS
002
(Scrolling Stopped)
S2
INCREASE
003
S3
DECREASE
001
S2 + S3
Accept Changes and Exit
Baseline Prom
Contract Prom
DCSS INSTALLATION PARAMETER SETUP
Front Door Type 005
Scroll
S3
Rear Door Type,Front Timer 1,Front Timer 2,Front Timer 3,Front Timer 4,Front Timer Rear Timer 1,Rear Timer 2,Rear Timer 3,Rear Timer 4,Rear Timer 5,Max Door Sag NT,Manual Cam Prot,FDED at DFC Opt,RDED at DFC Opt,Invert DOL,Invert DCL,Inver RDOL,Invert RDCL,Late DOB Time
S2
EDIT DCSS PARAMETERS
005
(Scrolling Stopped)
S2
INCREASE
006
S3
DECREASE
004
S2 + S3
Accept Changes and Exit
U8
U26
SG
UADS
LSAT
MTCI
CDGL STAT
RGS
HDS
GSTAT
MIIS
DZ
RDS
LADS
UPRDY
MMIS
C
DNRDY
MNOR
AC Input Indicators
AC Output Indicators
POSITION INDICATOR SETUP
POS 000 R 002 2
Scroll
S3
POS 000 L 00x
POS 001 R 00x
etc.
S2
EDIT PI CHARACTERS
002
(Scrolling Stopped)
S2
INCREASE
003
S3
DECREASE
001
S2 + S3
Accept Changes and Exit
ENTER CAR CALL DISPLAY
ENTER CAR CALL
Scroll
S2
S3
ENTER CAR CALLS
001
S2
INCREASE
002
S3
DECREASE
Top
S2 + S3
Accept Call and Exit
P1
P3
P4
P5
P6
P7
P8
P12
P13
P14
P16
P17
CES
RESET
WR BAT HRT S2 S3
Service Display
RING RSL
Return to Power on Display
OCSS Operational Modes

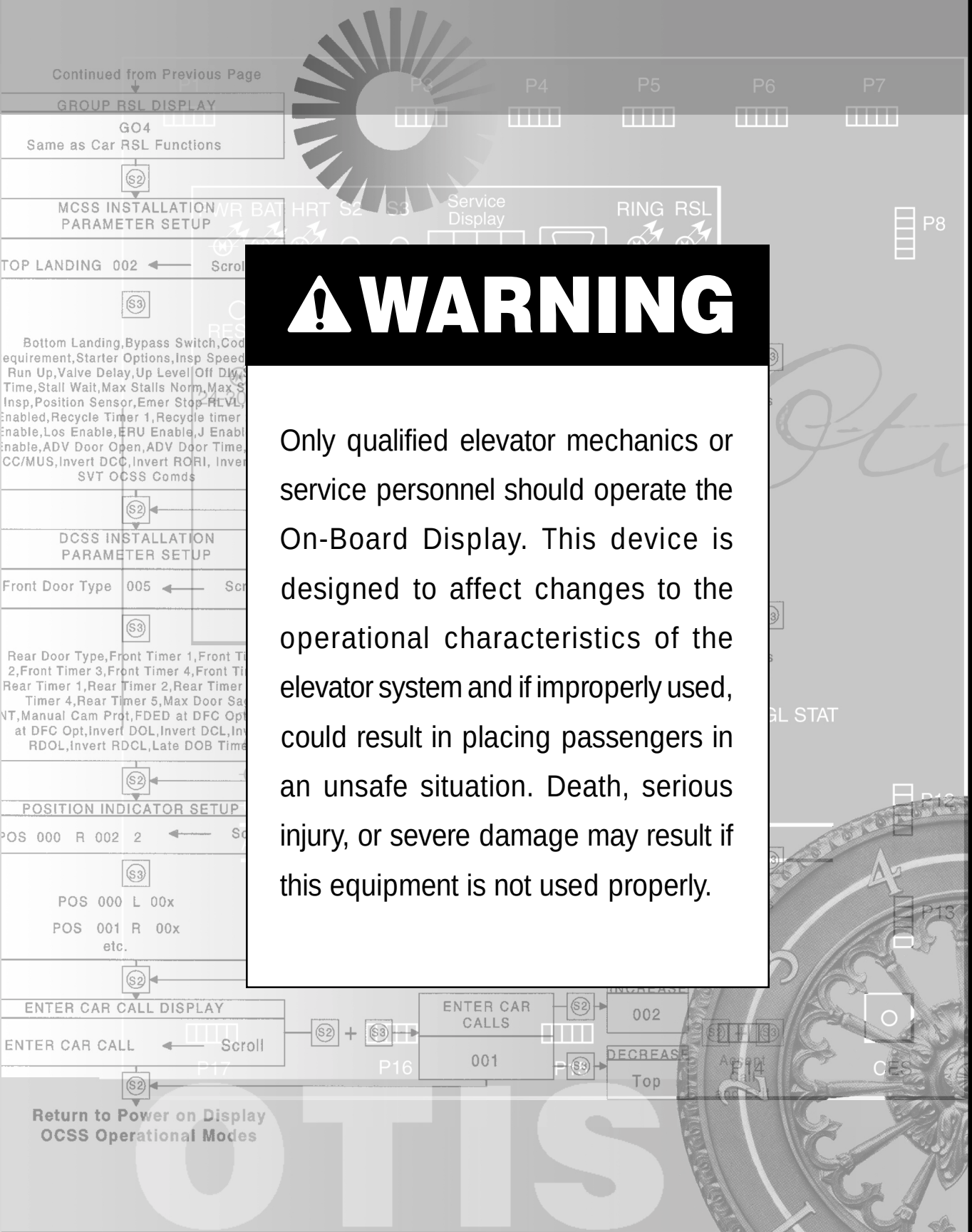

⚠WARNING

Only qualified elevator mechanics or service personnel should operate the On-Board Display. This device is designed to affect changes to the operational characteristics of the elevator system and if improperly used, could result in placing passengers in an unsafe situation. Death, serious injury, or severe damage may result if this equipment is not used properly.

Appendix A: Instructions for the On-Board Service Display

1. *Description of the On-Board Service Display*
2. *Navigation and Menu Control*
3. *Current Status Menu*
4. *Description and Operation of Main Functions*
5. *Navigational Chart for Reference*

Safety is everyone's responsibility. Please take all precautions when working in hazardous job conditions.

It is always a good idea to wear a hard hat and safety glasses while servicing this, or any other, elevator equipment.

High voltages may be present on or around this equipment.

1. Description of the On-Board Service Display

The On-Board Service Display provides you with a quick means of troubleshooting your low-rise elevator controller. Through a series of menus you can determine the settings your elevator is currently running under and also determine if any of those settings should be changed. The On-board Service Display uses codes, numbers and characters in particular sequence, to represent information. These codes are explained in the pages that follow.

The On-Board Service Display is located on the processor board of your controller. It is in the upper left hand side of the controller cabinet and looks like the picture below.

2. Navigation and Menu Control

The On-Board Service Display uses a series of Main Menus that, when selected, will grant access to sub menus subordinate to them. For example, toggling to the main menu for Motion Control will allow you to display the settings and provide the ability to edit those settings. All of these navigational elements are conducted using the two "buttons" on your On-Board Service Display.

The "left button" (S2) and the "right button" (S3) are used to toggle through the various display functions. Pressing and holding S2 for 1 second displays the next main function.

The options under each main function are only available by pressing the S3 button.

To advance to the next main function or sub function, press both S2 and S3 at the same time for 1 second.

3. Current Status Menu

The Current Status menu is the default display. The current car position is displayed as the left most character. In the example below, the car is on landing 1.

1 IDL

The three remaining characters are used to display the Operational Control Sub System (OCSS) mode. This mode is described further in the next section, but essentially this mode is used to describe the operational characteristic of the car. In our example above, IDL indicates that the car is "Idle."

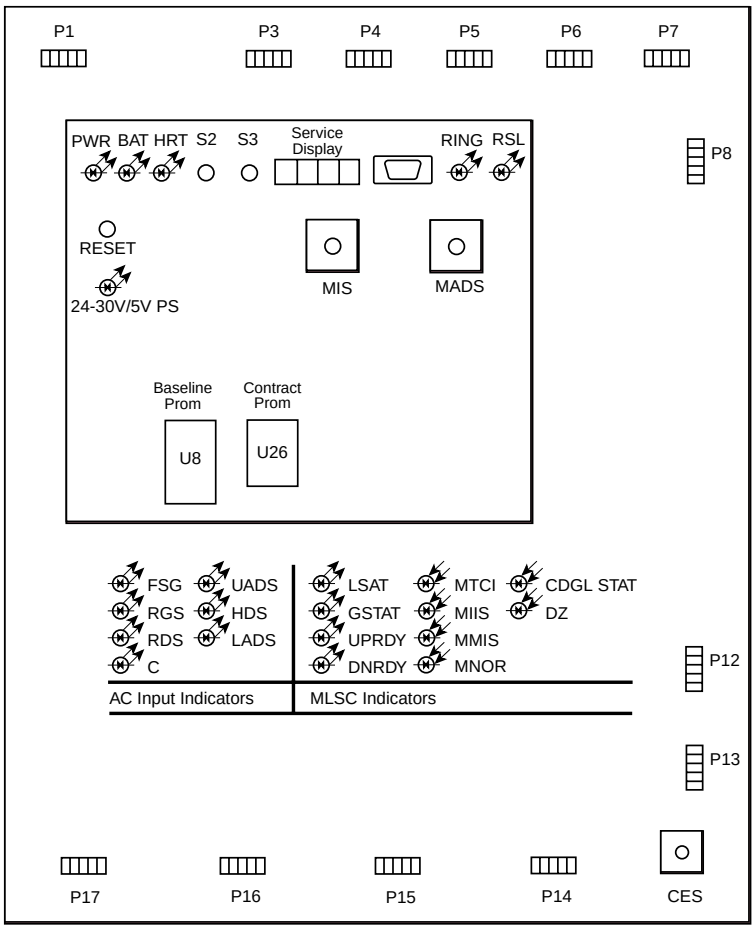

On-Board Service Display is located on the processor board.

If you were to press and hold the "right button" (S3) for I second, the display would toggle over to the Motion Control Sub System (MCSS). Releasing the button will restore the original display.

4. Description and Operation of Main Functions

There are 12 Main Functions. They are accessed by pressing S2 for 1 second, or holding it continuously until the function you want is displayed. The 12 Functions are:

1 - OCSS STATUS
2 - DOOR STATUS
3 - SHUTDOWN CODES
4 - COUNTERS
5 - RAM CLEAR
6 - OCSS PARAMETERS SETUP
7 - CAR RSL DISPLAY
8 - GROUP RSL DISPLAY
9 - MCSS PARAMETERS SETUP
10 - DCSS PARAMETERS SETUP
11 - POSITION INDICATOR SETUP
12 - ENTER CAR CALLS

Each main function is described below.

Operational Control Sub System (OCSS) Modes:

ACP-	Anti-crime protection	EPC-	Emergency power wait for correction run
ATT-	Attendant operation	EPR-	Emergency power return operation
CHC-	Car/hall cutoff calls	EPT-	Emergency power transfer
COR-	Correction run	EPW-	Emergency power wait for normal operation
CRL-	Card reader lockout	ESB-	Emergency stop button
CTL-	Car-to-lobby	HBP-	Hall button protection
DBF-	Drive brake fault (n/a)	IDL-	Idle
DCP-	Delay car protection	INI-	Initialization
DHB-	Door hold button	ISC-	Independent service
DLF-	Door lock failure	NAV-	Car not available
DTC-	Door time protection close	NOR-	Normal
DTO-	Door time protection open	PKS-	Parking shutdown
EFO-	Emergency fire service operation (phase I)	PRK-	Park
EFP-	Emergency fire service power interruption	RCY-	Recycle operation
EFS-	Emergency fire service (phase II)	ROT-	Riot operation
EHS-	Emergency hospital service	SAB-	Sabbath operation
EMK-	Emergency medical keyswitch (Mass)	STP-	Stall protection
EMT-	Emergency medical technician keyswitch (Mass)	WCO-	Wild car operation

Pressing the "right button" (S3) and holding it will display the Motion Control Sub System Modes.

Motion Control Sub System (MCSS) modes:

EST-	Emergency stop	REC-	Recover
IDL-	Idle	RVL-	Relevel
IIS-	Inspection initiation switch	SHD-	Shutdown
MIS-	Machine room inspection	STB-	Standby (safety circuit open)
NOR-	Normal	STL-	Stall
PIN-	Pre-inspection	TCI-	Top-of-car inspection
RCY-	Recycle		

Door Status Menu

The Door Status menu displays the current state of the front and rear doors. The two leftmost characters display the front door status and the two rightmost characters the rear door status.

[ ] = Fully Open

] [= Fully Closed

>< = Closing

<> = Opening

The example below shows the front doors as fully open and the rear doors are shown closing:

[ ] ><

Shutdown Codes Menu

This menu displays the cause of a shutdown. If there are no shutdowns then "OK" will be displayed. Otherwise, pressing the "right button" (S3) will step through the currently active motion control faults.

Motion Control Sub System (MCSS) Shutdown Codes:

CODE	ERROR #	DESCRIPTION	CODE	ERROR #	DESCRIPTION
BAK2-	2633	Bottom access keyswitch	MUS-	2619	Motor up to speed contact failure in nordic starter
BYIN-	2603	Landing door bypass input mismatch	OLT-	2648	Oil low temperature sensor has operated.
BYOP-	2630	Landing door bypass active on normal	PAL-	2604	Mismatch between PAL logic and software
C-	2620	Safe relay "on" during CIO test	RCYF-	2641	Recycle operation failure
DCC-	2611	Delta contactor driver or feedback	RECF-	2640	Recover mode failed
DIRB-	2631	Up/down inspection button active	RELD-	2601	Down relevel sensor during normal operation
			RELU-	2600	Up relevel sensor
DLFB-	2613	Down leveling valve driver or feedback	RDS-	2627	Rear door switch fault
DMFB-	2615	Down main valve driver or feedback	RGS-	2625	Rear gate switch fault
DZ-	2602	Door zone	ROR-	2616	Recycle operation relay fault
			RORI-	2634	Recycle operation relay input failure
ERU-	2646	Emergency return unit active	STRT-	2618	Failure with nordic starter.
ES-	2626	Emergency stop switch	STLD-	2644	Stall in down direction
FLT-	2617	Fault in solid state starter	STLU-	2643	Stall in up direction
FGS-	2624	Front gate switch fault			
FLRP-	2642	Invalid floor position	TCI-	2606	TCI/TCIC mismatch
HDS-	2622	Hoistway door switch (intermediate) fault	UADS-	2621	Upper access door switch fault
INS-	2605	IIS/TCI mismatch	UAK2-	2632	Upper access keyswitch
J-	2647	Reverse phase relay active	ULFB-	2612	Up leveling valve driver or feedback
LADS-	2623	Lower access door switch fault	UMFB-	2614	Up main valve driver or feedback
LOS-	2645	Low oil switch activated	WCC-	2610	Wye contactor driver or feedback

Counter Menu

This menu displays the decimal value of the number of motor contactor operations (2A), runs (RUNS), relevels (RLEV) and front and rear door operations (FDR and RDR) as an aid in the maintenance process. The display "scrolls' to the left to accommodate all of the characters necessary to show the current count.

Pressing the "right button" steps the display through each of the 5 counters.

For example, 152 motor starts would be shown as:

⬅ scroll

2A 152

Reset Faults Menu

The shutdown codes are stored in memory. Any shutdown will set a flag and the car will not operate until it is cleared. Both the OCSS and MCSS Bat Ram can be cleared by placing the elevator on machine room inspection. Once the cause of a shutdown has been corrected, press the "left button" to step to this menu. The following will be displayed:

CLR 0

Press the "right button" three times to clear the shutdown. The display will increment to read, CLR1, CLR2, and go back to reading CLRO. The Reset button should be pressed to clear the Bat Ram.

Operational Control Sub System (OCSS) Installation Parameter Setup Menu

The values of the installations parameters listed below can be monitored and edited for best local performance. Initially the display will indicate CC-DT - to advance to the next address press the right (S3) button for approximately 1 second. To edit the data at a particular address press both the right (S3) and left (S2) until the scrolling stops and the data is displayed. To increase the value press the left (S2) button. To decrease the value press the right (S3) button. The edit mode can be exited by pressing both buttons simultaneously or it will automatically exit if no buttons are pressed for 25 seconds. The last values displayed will be stored on exit.

CC-DT

HC-DT
REV-DT
EN-NDG
NDG-T
DCP-T
EFS
EFO-P
ASL-P
LOBBY
EFS-CK
EFO-CK
ASL-CK
EN-HCB
RCB_NO
FDTO-T
RDTO-T
DTO-O

Car RSL Testing Menu

This test allows for monitoring and enabling the states of the addresses on the serial link. The initial display will be "C04", which is car link address 04. To advance to the next address press the right (S3) button until the address increments. The four bits available at that particular address will be scrolling after the address. The states of these bits can be monitored for either "1" or "0" . To "turn on" a particular address both buttons (S2 and S3) must be pressed together to enter the edit mode. Once the display has

stopped scrolling, the data at a particular bit can be changed. Pressing the left button will produce a question mark (?) in the bit field. The field with the question mark can be "enabled" by pressing the right (S3) button. The bit fields are numbered from right to left with bit 1 being the rightmost and bit 4 the leftmost. The edit mode must be exited manually by pressing both S2 and S3.

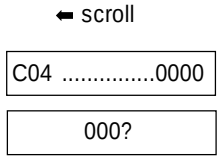

Bit "1" has been selected

Group RSL Testing Menu

The group RSL functions is tested in the same manner as the car RSL.

Motion Control Sub System (MCSS) Installation Parameter Setup

All MCSS parameters may be viewed or modified using this function. The parameter name and its current value will scroll from right to left. Press and hold S3 for 1 second to view the next parameter.

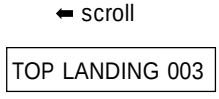

To change a parameter, press S2 and S3 together for 1 second to enter EDIT mode. The scrolling will stop and the current value of the parameter is frozen in the display.

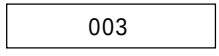

The S2 button now becomes a "+" key and the S3 button becomes a "-" key.

Press and hold S2 for 1 second to increase the value by 1. If you continue to hold S2 the parameter will increase by 1 every half second.

Press and hold S3 for 1 second to decrease the value by 1. If you continue to hold S3 the parameter will decrease by 1 every half second.

When finished, press and hold S2 and S3 together for 1 second. The display will exit EDIT mode and the new value will be written to the EEPROM.

If you leave the display in EDIT mode, after about 20 seconds, the display will automatically exit EDIT mode and the value will remain unchanged.

Door Control Sub System (DCSS) Installation Parameter Setup

All DCSS parameters may be viewed or modified using this function. The parameter name and its current value will scroll from right to left. Press and hold S3 for 1 second to view the next parameter.

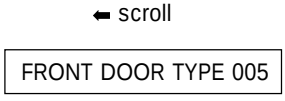

To change a parameter, press S2 and S3 together for 1 second to enter EDIT mode. The scrolling will stop and the current value of the parameter is frozen in the display.

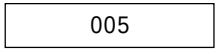

The S2 button now becomes a "+" key and the S3 button becomes a "-" key.

Press and hold S2 for 1 second to increase the value by 1. If you continue to hold S2 the parameter will increase by 1 every half second.

Press and hold S3 for 1 second to decrease the value by 1. If you continue to hold S3 the parameter will decrease by 1 every half second.

When finished, press and hold S2 and S3 together for 1 second. The display will exit EDIT mode and the new value will be written to the EEPROM.

If you leave the display in EDIT mode, after about 20 seconds, the display will automatically exit EDIT mode and the value will remain unchanged.

Position Indicator Setup

The characters displayed on the Vacuum Fluorescent PI can be modified with this function. The PI is composed of two characters displayed in one of two positions (the left position or "L" and the Right position or "R"). Each position has a data value representing the code for the alpha-numeric character to be displayed.

The display will scroll and appears as follows:

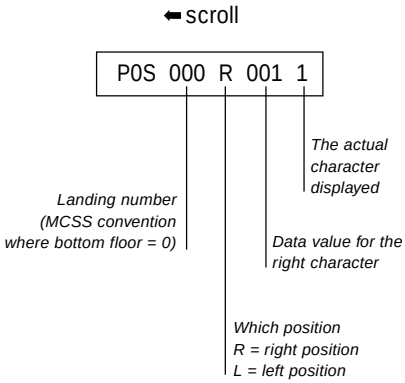

Pressing S3 will advance the display to show the data for the Left position for the current landing.

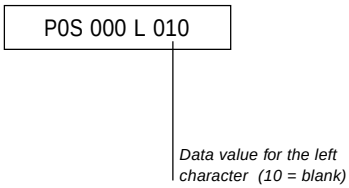

Pressing S3 again will advance to the next landing and show the data for the Right position. Continuing to press S3 advances through the PI data in the following sequence:

Data for Left Position (landing 'x')

Data for Right Position (landing 'x + 1')

Data for Left Position (landing 'x + 1')

Data for Right Position (landing 'x + 2')

Data for Left Position (landing 'x + 2')

The sequence will continue until the top landing is reached and then the display "wraps around" to the bottom landing .

Press and hold S2 and S3 together for 1 second to enter EDIT mode. The display will freeze, showing the current code for the character displayed in the PI.

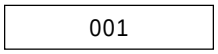

Press and hold S2 for 1 second to increase the value by 1. If you continue to hold S2 the parameter will increase by 1 every half second.

Press and hold S3 for 1 second to decrease the value by 1. If you continue to hold S3 the parameter will decrease by 1 every half second.

Use the following table as a reference when changing the characters displayed for the PI. Enter the code representing the character you wish.

Value	Char	Value	Char	Value	Char	Value	Char
00	'0'	10	blank	20	'J'	30	'T'
01	'1'	11	'A'	21	'K'	31	'U'
02	'2'	12	'B'	22	'L'	32	'V'
03	'3'	13	'C'	23	'M'	33	'W'
04	'4'	14	'D'	24	'N'	34	'X'
05	'5'	15	'E'	25	'O'	35	'Y'
06	'6'	16	'F'	26	'P'	36	'Z'
07	'7'	17	'G'	27	'Q'	37	'-'
08	'8'	18	'H'	28	'R'	38	'*'
09	'9'	19	'I'	29	'S'		

For example-hold S2 until the displayed value = '026'.

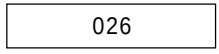

Now press S2 and S3 together to exit EDIT mode. The Right position character has been changed to a 'P' for this landing:

⬅ scroll

Entering Car Call Display

This function allows you to set up car calls. Upon entering this function the display is scrolling-

⬅ scroll

Press and hold S2 and S3 together for 1 second to enter EDIT mode. The display stops scrolling and displays:

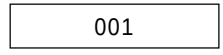

Use S2 and S3 as "plus'/"minus" keys to enter the number for the landing you want to set a car call for (use OCSS convention where bottom floor = 1).

Press and hold S2 for 1 second to increase the value by 1. If you continue to hold S2 the value will increase by 1 every half second.

Press and hold S3 for 1 second to decrease the value by 1. If you continue to hold S3 the parameter will decrease by 1 every half second.

This display will "wrap around" back to '1' if S2 is held. Likewise it will "wrap around" backwards to the TOP floor if S3 is held. So

when you enter this function, if you want to set a car call for the top floor, just press S3 one time.

Once you have selected the desired landing, press S2 and S3 together to exit EDIT mode. The call will be registered when you exit.

Service Display Navigator

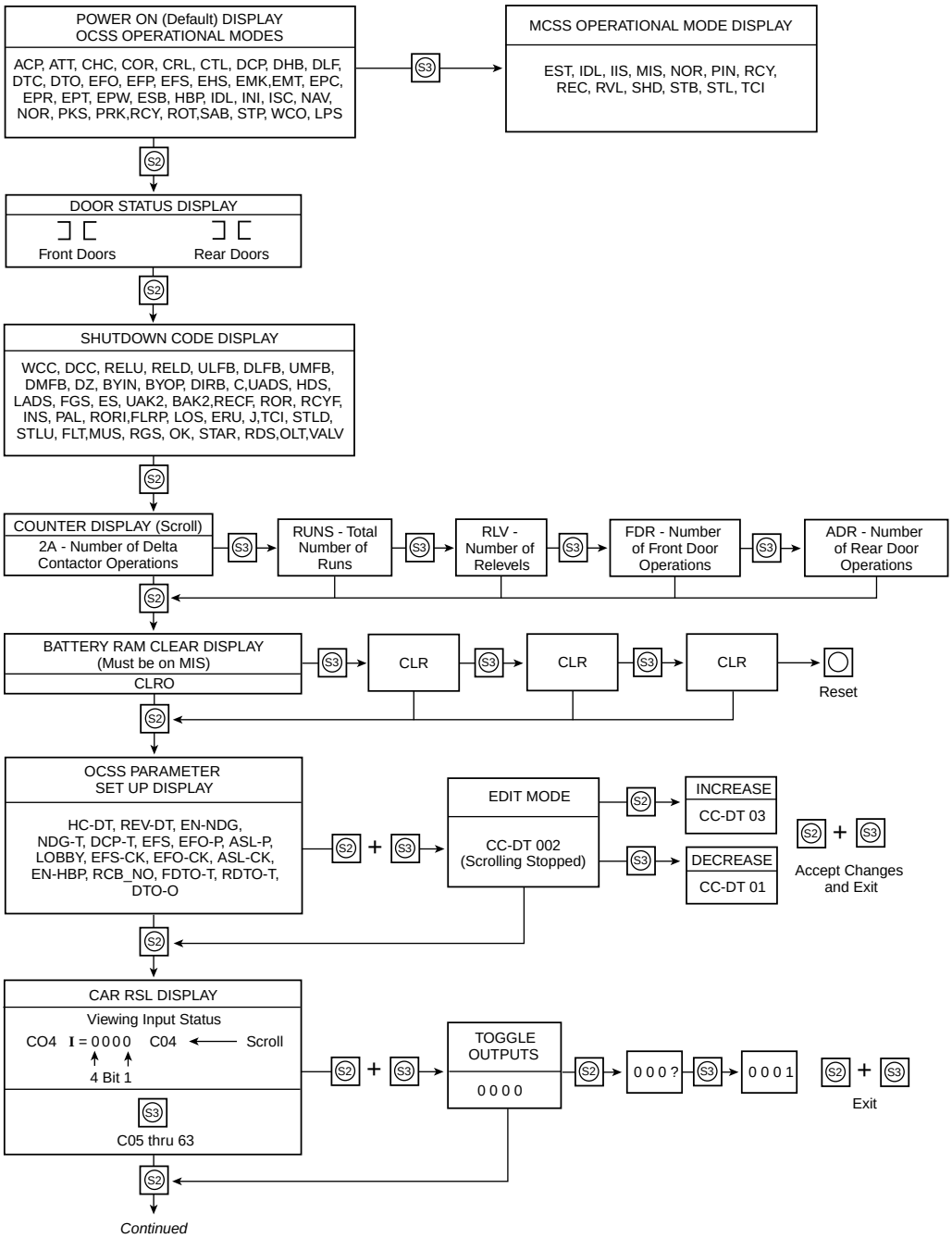

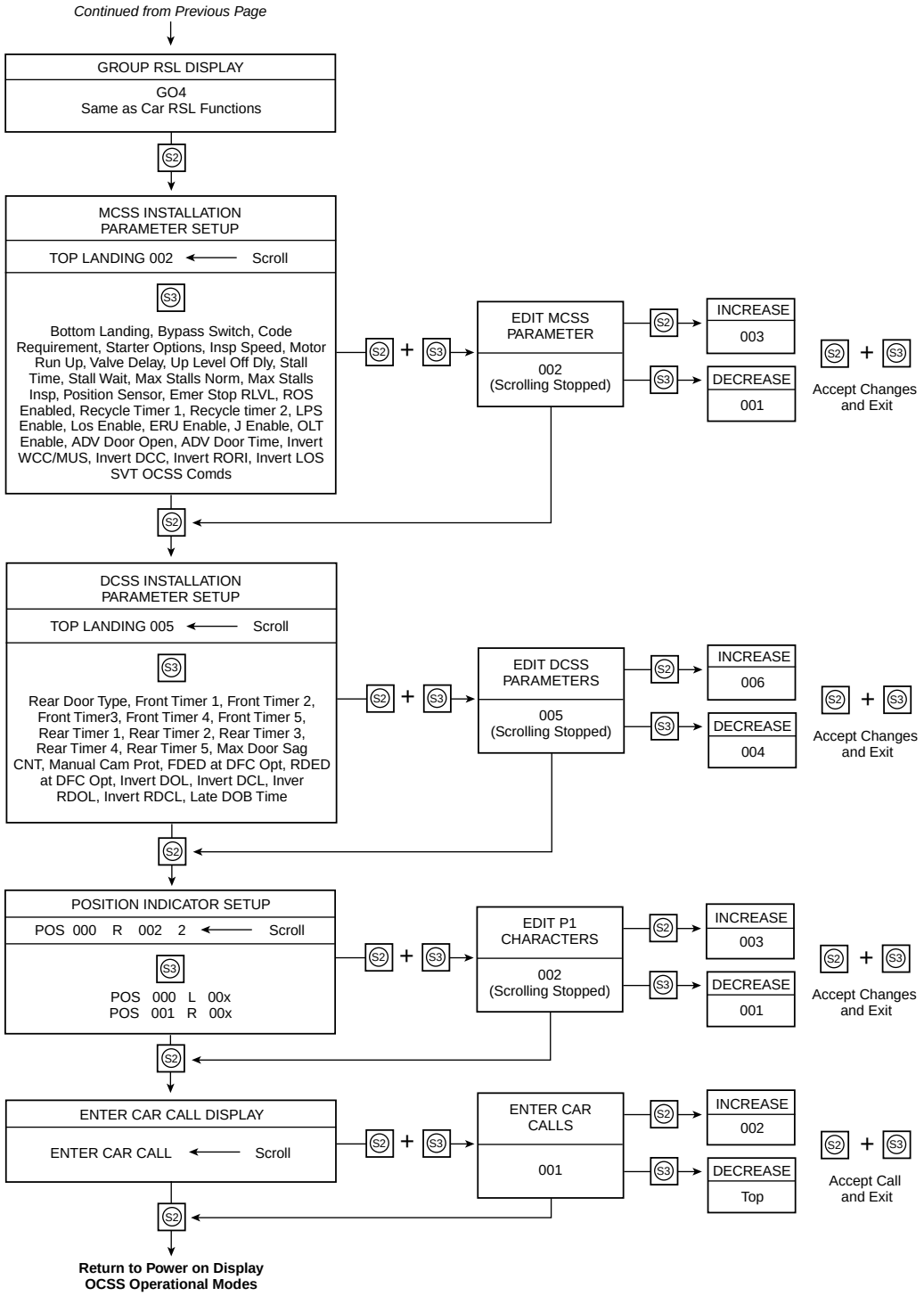
Continued from Previous Page
GROUP RSL DISPLAY
GO4
Same as Car RSL Functions
S2
MCSS INSTALLATION PARAMETER SETUP
TOP LANDING 002 ← Scroll
S3
Bottom Landing, Bypass Switch, Code Requirement, Starter Options, Insp Speed, Motor Run Up, Valve Delay, Up Level Off Dly, Stall Time, Stall Wait, Max Stalls Norm, Max Stalls Insp, Position Sensor, Emer Stop RLVL, ROS Enabled, Recycle Timer 1, Recycle timer 2, LPS Enable, Los Enable, ERU Enable, J Enable, OLT Enable, ADV Door Open, ADV Door Time, Invert WCC/MUS, Invert DCC, Invert RORI, Invert LOS SVT OCSS Comds
S2 + S3
EDIT MCSS PARAMETER
002
(Scrolling Stopped)
S2
INCREASE
003
S3
DECREASE
001
S2 + S3
Accept Changes and Exit
S2
DCSS INSTALLATION PARAMETER SETUP
TOP LANDING 005 ← Scroll
S3
Rear Door Type, Front Timer 1, Front Timer 2, Front Timer3, Front Timer 4, Front Timer 5, Rear Timer 1, Rear Timer 2, Rear Timer 3, Rear Timer 4, Rear Timer 5, Max Door Sag CNT, Manual Cam Prot, FDED at DFC Opt, RDED at DFC Opt, Invert DOL, Invert DCL, Inver RDOL, Invert RDCL, Late DOB Time
S2 + S3
EDIT DCSS PARAMETERS
005
(Scrolling Stopped)
S2
INCREASE
006
S3
DECREASE
004
S2 + S3
Accept Changes and Exit
S2
POSITION INDICATOR SETUP
POS 000 R 002 2 ← Scroll
S3
POS 000 L 00x
POS 001 R 00x
S2 + S3
EDIT P1 CHARACTERS
002
(Scrolling Stopped)
S2
INCREASE
003
S3
DECREASE
001
S2 + S3
Accept Changes and Exit
S2
ENTER CAR CALL DISPLAY
ENTER CAR CALL ← Scroll
S2 + S3
ENTER CAR CALLS
001
S2
INCREASE
002
S3
DECREASE
Top
S2 + S3
Accept Call and Exit
S2
Return to Power on Display
OCSS Operational Modes

Appendix B

Component or Assembly Category	Part Number Part Description	Part Number
Plunger and Cylinder	Packing Plunger, nominal size 4"	D6942Y1
Plunger and Cylinder	Packing Plunger, nominal size 4-1/2"	D6942Y2
Plunger and Cylinder	Packing Plunger, nominal size 5-1/2"	D6942Y3
Plunger and Cylinder	Packing Plunger, nominal size 6-1/2"	D6942Y4
Plunger and Cylinder	Packing Plunger, nominal size 7-1/2"	D6942Y5
Plunger and Cylinder	Packing Plunger, nominal size 8-1/2"	D6942Y6
Plunger and Cylinder	Packing Plunger, nominal size 9-1/2"	D6942Y7
Plunger and Cylinder	Packing Plunger, nominal size 10-1/2"	D6942Y8
Plunger and Cylinder	Packing Plunger, nominal size 12-1/2"	D6942Y9
Plunger and Cylinder	Packing Plunger, nominal size 14"	D6942Y10
Plunger and Cylinder	Packing Plunger, nominal size 16"	D6942Y11
Plunger and Cylinder	Packing Kit, nominal size 3-7/8"	AAA6942GT1
Plunger and Cylinder	Packing Kit, nominal size 4"	AAA6942GT2
Plunger and Cylinder	Packing Kit, nominal size 4-1/2"	AAA6942GT3

Actual Plunger Type	Nominal Model Plunger	Texacone Size (in.)	Ref. 1 inner	Ref. 2 outer	Ref. 3 Pkg. Kit	Ref. 4 Vintage
C6942Y	HHV-1500	4.00	2.97	4.63	AAA6942GS3	182T55
B6942Y	HHV-1500	4.00				
A6942Y	HHV-1500	4.00		W/O		
6942Y	HHV-1500	4.00			AAA6942GS1	
A6942BD	HLS-2000	4.50	4.28	5.1	AAA6942GS2	182T98
6942BD	HLS-2000	4.50	3.5			
6942BR	HLS-2500	5.00	3.88	5.7	AAA6942GS2	182T50
C6942BC	HLH-4000	5.00				
B6942BC	HLH-4000	5.00				
A6942BC	HLH-4000	5.00	4.38	6.32	AAA6942GS4	182T23

Model	
HHV-1500	4.00
HHV-1501	4.00

Appendix B: Replacement Parts

Assembly or Component	*Part Name*	*Part Number*	*Part Description*
Access Keyswitch	Faceplate	AAA147PR3	ANSI 1987, CA
	Faceplate	AAA147PR7	CT, B44 Manual
	Faceplate	AAA147PR8	CT, B44 Manual
	Keyswitch Assembly	AAB23500AD1	Code: SC
	Keyswitch Assembly	AAB23500G26	Code: B44 Manual
	Keyswitch Assembly	AAB23500G3	Keyswitch Assembly, Access, SPL 31-AAA23500F
	Keyswitch Assembly	AAB23500G61	Keyswitch Assembly, S.E.S. Phase 1, Code: ANSI 1987, CA, PA
	Keyswitch Assembly	AAB23500H1	Code: Chicago
	Keyswitch Assembly	AAB23500H3	Code: NYC
	Keyswitch Assembly	AAB23500H5	Code: MA
	Keyswitch Assembly	AAB23500K1	Code: CT
	Screw	124DK1	Screw, Tamper Resistant, Stainless Steel Mill Finish 4
	Screw	124DK13	Screw, Tamper Resistant, Stainless Steel Mirror Finish
	Screw	124DK14	Screw, Tamper Resistant, Bronze Mirror Finish
	Screw	124DK2	Screw, Tamper Resistant, Bronze Brushed Finish
	Spacer	AAA462JS2	Spacer (1 per keyswitch)
Emergency Return Unit	Battery	AAA718E1	Battery, 12VDC
	Buzzer	AAA731C2	Buzzer, Audible Alarm
	Clip	AAA339MK2	Clip, Retaining, with CR2 Relay
	Clip	AAA339MK3	Clip, retaining, with CR1 Relay
	Fuse	375P2	Fuse, 2.0A, 250V, Type 3AG, F1 ABA26800RD2
	Fuse	375P26	Fuse, 1.5A, 250V, Type 3AG (F6)
	Fuse	375P3	Fuse, 3.0A, 250V, Type 3AG (F1, F2, F3)
	Fuse	AAA375BX4	Fuse, 0.75A, 125V, (F5)
	Fuse	AAA375CF3	Fuse, 30.0A, 32V, Type 3AG (F4)
	Lamp	AAA424Y1	Lamp, Neon, Amber
	Lamp	AAA424Y3	Lamp, Neon, Green
	P.C. Board	ABA26800RD1	P.C. Board, Aut-O-Safe, 110VDC Door Power Supply

Assembly or Component	Part Name	Part Number	Part Description
Emergency Return Unit b	P.C. Board	ABA26800RD2	P.C. Board, Aut-O-Safe, 220VDC Door Power Supply
	Plug	AAA447AP26	Plug, 14 Position (P1)
	Relay	AAA613CZ16	Relay, 15A Contacts, 12VDC Coil, 3-Pole, Double Throw (CR1)
	Relay	AAA613CZ17	Relay, 15A Contacts, 12VDC Coil, 2-Pole, Double Throw (CR2)
	Switch	AAA177EM3	Switch, Toggle, Single Pole Double Throw
	Transformer	AAA225GT2	Transformer, 115VAC Primary, 48V @1.2A Secondary, 56VA
	Voltmeter	AAA659D1	Voltmeter
Buffer and Jack	Buffer Stand	AAA320EU	Buffer Stand
	Cylinder Steadier	AAA386KVZ1	Cylinder Steadier
	Cylinder Steadier	AAA386KVZ2	Cylinder Steadier
Buffer Assembly	Buffer Stand	AAA471HL1	Buffer Stand
	Buffer Stand	AAA471HL2	Buffer Stand
	Buffer Stand	AAA471HL3	Buffer Stand
	Buffer Stand	AAA471HL4	Buffer Stand
	Shim	255AB160	Shim
	Shim	255AB161	Shim
	Shim	255AB162	Shim
	Shim	255AB163	Shim
	Spring	90AL2	Spring
	Spring	90ND5	Spring
	Spring	90RD12	Spring
	Spring	90TD4	Spring
Car Operating Panel (series 1)	Audible Device	A6219G2	Audible Signal Device (Floor PassingTone) w/Brkt + Adhesive
	Buzzer	6219F3	Buzzer (for SES Phase 1) 7-16vdc, Sound 75dB min.
	Hinge	391CA1	Hinge, Lower
	Hinge	391CA2	Hinge, Lower
	Hinge	391CA3	Hinge, Upper
	Hinge	391CA4	Hinge, Upper
	Intercom Assembly	AAA7069AAH1	Intercom Assembly

Assembly or Component	*Part Name*	*Part Number*	*Part Description*
Car Operating Panel (series 1)	Intercom Housing	396NB1	Housing, Intercom
	Keyswitch	6410W13	Keyswitch, Fan, 2-Speed
	Keyswitch	6410W4	Keyswitch, Light Switch / Fan, 1-Speed
	Lens	443CA1	Lens, Transparent Green, 11.3 x 8.62 in.
	Nut	72BX6	Nut, Speed for Tamper Resistant Screw
	P.C. Board	AAA26800UX2	P.C. Board, Line Terminator
	P.C. Board	ABA26800TV1	P.C. Board, Remote Station Extender
	P.C. Board	ACA26800HJ1	P.C. Board, Position Indicator
	P.C. Board	GAA25005B1	P.C. Board, Remote Station
	Plug	444BK1	Plug, 1.0 in w/o Keyswitch
	Plug	444BK2	Plug, 1.625 in w/o Keyswitch
	Screw	VP-855550	Screw, Tamper Resistant, Oval Head
	Spacer	462GV3	Spacer, Nylon, 0.3 in , 0.30 in. Thick
	Speaker Assembly	AAA433PS1	Speaker Assembly, Intercom
	Speaker Housing	AAA396NE2	Housing, Speaker w/(4) 251CB7 Inserts
Car Operating Panel (series 4)	Audible Device	A6219G2	Audible Signal Device (floor passing tone)
	Lens	AAA443DK3	Lens, Car Position Indicator
	P.C. Board	AAA26800UX2	P.C. Board, Line Terminator
	P.C. Board	ABA26800TH1	P.C. Board, Remote-Station Extender
	P.C. Board	ACA26800HJ1	P.C. Board, Position Indicator
	P.C. Board	GAA25005B1	P.C. Board, Remote-Station 14
	Spacer	AAA462JS2	Spacer, Keyswitch (1 per keyswitch)
	Speaker Assembly	AAA433PS1	Speaker Assembly, Intercom
	Switch	6073F1	Switch, Toggle, Emergency Stop
	Telephone	CAA7145E1	Telephone, Hands-Free
Carframe and Platform	Guide Shoe	AAA24179A2	Guide Shoe
	Shim	255ES12	Shim
Carframe and Platform (Roped)	Plate	386BEX47	Plate
	Shim	255ES12	Shim
Door Detector	Bracket	316EAN1	Bracket, Cable Support
	Bracket	AAA316GAZ7	Bracket, Retainer and Guide, Detector/Emitter Assemblies
	Bracket	AAA316GAZ8	Bracket, Retainer and Guide, Detector/Emitter Assemblies

Assembly or Component	Part Name	Part Number	Part Description
Door Detector	Bracket	ABA316FUL2	Bracket, Mounting, A = 0.56 in.
	Bracket	ABA316FUL3	Bracket, Mounting, A = 1.00 in.
	Bracket	ABA316FUL4	Bracket, Mounting, A = 1.25 in.
	Bumper	320CV2	Bumper, Top
	Bumper	444BL1	Bumper, Bottom
	Cage	AAA326AJ1	Cage (Extended Aluminum - Black) 84.5" Long
	Cage	AAA326AJ5	Cage (Extended Aluminum - Black) 80.0" Long
	Clamp	336CZ9	Clamp, Cable
	Connector	AAA174XX1	Connector, 5500 mm (216.7 in.) L
	Connector	AAA174XX2	Connector, 7620 mm (300.23 in.) L High Cab Only
	Controller Assembly	AAA24591R1	Assembly, Controller, 115 VAC
	Controller Assembly	AAA24591R2	Assembly, Controller, 230 VAC
	Controller Assembly	AAA24591R3	Assembly, Controller, 115 VAC
	Detector	AAA24591Q4	Assembly, Detector, 3D Standard Mount Center Opening Doors
	Detector	AAA24591Q4	Assembly, Detector, 3D Standard Mount Single-Slide Door
	Detector	AAA24591Q6	Assembly, Detector, 3D Standard Mount Single-Slide Door
	Detector	AAA24591T10	Single-Slide Door, Strike Mounted, 230 VAC
	Detector	AAA24591T11	Center Opening Doors, Standard Mount, 115 VAC
	Detector	AAA24591T4	Center Open Doors, Standard/Parallel Mount
	Detector	AAA24591T5	Single-Slide Door, Strike Mounted
	Detector	AAA24591T6	Single-Slide Door, Strike Mounted
	Detector	AAA24591T7	Center Opening Doors, High Cab (New Equipment only)
	Detector	AAA24591T8	Center Opening Doors, Standard/Parallel Mount, 230 VAC
	Detector	AAA24591T9	Single-Slide Door, Strike Mounted, 230 VAC
	Emitter Assembly	AAA24591P4	Assembly, Emitter, 3D Standard Mount Center Opening Doors

Assembly or Component	Part Name	Part Number	Part Description
Door Detector	Emitter Assembly	AAA24591P4	Assembly, Emitter, 3D Strike Mount Single-Slide Door
	Emitter Assembly	AAA24591P6	Assembly, Emitter, 3D Strike Mount Single-Slide Door
	Extender	AAA24591U1	Extender, Cosmetic, 80 in. L, 3D Standard Mount, Center Open or Single-Slide Doors
	Extender	AAA24591U2	Extender, Cosmetic, 80 in. L, 3D Strike Mount, Single-Slide Door
	Fuse	AAA375BY15	Fuse, 0.5 Amp, 115 VAC
	Fuse	AAA375BY2	Fuse, 0.25 Amp, 230 VAC
	Molding	402FA5	Molding, Astragal, 181.5 in. L
	Molding	402FA6	Molding, Astragal, 101.5 in. L
	Molding	402FA7	Molding, Astragal, 113.5 in. L
	P.C. Board	AAA26800XB1	PC Board, 115 VAC
	P.C. Board	AAA26800XB2	PC Board, 230 VAC
	Relay	AAA613CZ21	Relay, 24 VDC
	Retainer	326T1	Retainer, Cable
	Strap	AAA652AA10	Strap, TY-RAP®
	Strike Jamb	AAA283AQE1	Strike Jamb, St. Steel, Brushed, 2133.6 MM L, L-Shaped
	Strike Jamb	AAA283AQE2	Strike Jamb, St. Bronze, 2133.6 MM L, L-Shaped
	Strike Jamb	AAA283AQE3	Strike Jamb, St. Steel, Brushed, 2438.4 MM L, L-Shaped
	Strike Jamb	AAA283AQE4	Strike Jamb, Bronze, 2438.4 MM L, L-Shaped
	Strike Jamb	AAA283AQE5	Strike Jamb, St. Steel, Brushed, 2133.6 MM L, Z-Shaped
	Strike Jamb	AAA283AQE6	Strike Jamb, St. Bronze, 2133.6 MM L, Z-Shaped
	Strike Jamb	AAA283AQE7	Strike Jamb, St. Steel, Brushed, 2438.4 MM L, Z-Shaped
	Strike Jamb	AAA283AQE8	Strike Jamb, Bronze, 2438.4 MM L, Z-Shaped
	Arm	396E3	Arm, Drive Pulley Lever
	Bearing	207R1	Bearing
	Bearing	209AN1	Bearing
	Bearing	212AF1	Bearing, Integral Shaft

Assembly or Component	Part Name	Part Number	Part Description
Door Detector	Bearing	212AF2	Bearing, Integral Shaft
	Bearing	212AG1	Bearing
	Bearing Stand	471FY1	Bearing Stand, (for Intermediate Pulley)
	Bearing Stand	471GB1	Bearing Stand, (for Drive Pulley)
	Bracket	316DYE1	Bracket, Drive Shaft Support w/o Bearing
	Brush	240BA3	Brush (for General Electric Motor)
	Brush	AAA240AK1	Brush (for Leroy-Somer Motor)
	Cam	327MR1	Cam, White, Door Close (7 needed for full assembly)
	Cam	327MR2	Cam, Black, Door Open (7 needed for full assembly)
	Cam Marking Plate	102LY1	Cam Marking Plate
	Cam Marking Plate	102LY2	Cam Marking Plate
	Cam Marking Plate	102LY3	Cam Marking Plate
	Cam Marking Plate	102LY4	Cam Marking Plate
Door Operator	Cam Pack Assembly	A7782AE1	Cam Pack Assembly w/Resistors & Term Blocks
	Cam Pack Assembly	A7782AE2	Cam Pack Assembly w/Resistors & Term Blocks
	Cam Tool	314AD1	Cam Adjusting Tool
	Cap	329BY3	Cap (for General Electric Motor)
	Cap	6333DP-LS/HB000900	Cap (for Leroy-Somer Motor)
	Chain	332AW28	Chain, 58.5" Endless
	Coupling Shaft	218B1	Coupling Shaft Assembly w/o Cams
	Drive Arm	288TJ4	Drive Arm
	Drive Arm	288TP1	Drive Arm, 36" Opening
	Drive Arm	288TP2	Drive Arm, 42" Opening
	Drive Bushing	321FF1	Drive Bushing
	Drive Pulley	A198AJ1	Pulley, Drive
	Holder	178AY3	Holder
	Idler Link Assembly	2700CCF2	Kit, Idler Link Assembly, Right Hand
	Idler Link Assembly	2700CCF3	Kit, Idler Link Assembly, Left Hand
	Link Assembly	2700CCF1	Kit, Link Assembly
	Link Assembly	2700CCF10	Kit, Link Assembly, (only 32" Door Opening with 84"/96")
	Link Assembly	2700CCF4	Kit, Link Assembly, 42 in. Opening
	Link Assembly	2700CCF9	Kit, Link Assembly, 36 & 48 in. Opening

Assembly or Component	Part Name	Part Number	Part Description
Door Operator	Lug	432AA1	Adjustable Lug
	Motor	6333DP1	Motor, 120VDC, 1/6 HP. 1140RPM
	Operator Engine	A7782AA1	Assembly, Operator Engine, for 36 in and 42 in 1-Slide, RH and 48 in 2/Speed Doors
	Operator Engine	A7782AA2	Assembly, Operator Engine, for 36 in and 42 in 1-Slide, LH and 48 in 2/Speed Doors
	Operator Engine	A7782AA3	Assembly, Operator Engine, for 42 in Center Open Doors
	Operator Engine	A7782AA4	Assembly, Operator Engine, Retrofit for 7777A Operator for 36 in
	Operator Engine	A7782AA5	Assembly, Operator Engine, Retrofit for 7777A Operator for 36 in
	Operator Engine	A7782AA6	Assembly, Operator Engine, Retrofit for 7300/7660 Operator Center Opening Doors
	Pin	81AX1	Pin, Roll
	Pulley Assembly	198AH1	Assembly, Intermediate Pulley w/Sprocket and Washer
	Resistor	AAA617L10	Resistor, R5 & R6
	Roller	456EY1	Roller, Stop
	Screw	109P2	Screw, Hex Head, Thread Rolling 1/4 x 5/8 in
	Sheave	265BX1	Sheave, V-Belt
	Sprocket	195GS1	Sprocket
	Strip	298SF1	Strip, Rubber Silencer (for 198AJ1 sheave)
	Suppressor	605H2	Suppressor
	Switch	177DB1	Stopping Switch Assembly
	Terminal Board	303G28	Terminal Board
	U-Bolt	65FG1	U-Bolt, Chain Hold Down
	V-Belt	717B1	V-Belt, 44.25" long
	Vane Assembly	2700CCF7	Vane Assembly, Stationary,
	Vane Assembly	2700CCF8	Vane Assembly, Stationary,
	Vane Assembly	A6940AT1	Vane Assembly, Stationary
	Vane Assembly	C6970F15	1/Slide
	Vane Assembly	C6970F16	1/Slide
	Vane Assembly	C6970F19	2-Speed
	Vane Assembly	C6970F20	2-Speed
	Vane Assembly	C6970F21	Center Opening
	Vane Assembly	C6970F27	Center Opening

Assembly or Component	Part Name	Part Number	Part Description
Door Operator	Vane Assembly	C6970F28	Center Opening
	Vane Assembly	C6970F29	1/Slide
	Vane Assembly	C6970F29	2-Speed
	Vane Assembly	C6970F30	1/Slide
	Vane Assembly	C6970F30	2-Speed
	Vane Assembly	C6970F33	2-Speed
	Vane Assembly	C6970F34	2-Speed
	Vane Assembly	C6970F35	1/Slide
	Vane Assembly	C6970F36	1/Slide
	Vane Assembly	C6970F5	Center Opening
	Vane Assembly	C6970F7	Center Opening
	Vane Assembly	TYPE C6970F	Vane Assembly, Movable
	Washer	131CV1	Washer
Drive System (Roped)	Cylinder Stand	AAA471HJ1	All applications except Ontario Canada
	Cylinder Stand	AAA471HJ2	Ontario Canada only
	Pipe	377CH51	Pipe
	Plunger Guide Rail	AAA450BR2	16 Ft.
	Spring	90HB9	Compression
	Switch	AAA25590P1	Slack Rope
	Switch	AAA25590P2	Slack Rope
Emergency Key Box	Emergency Key Box Assembly	6471A2-3	Emergency Key Box, Assembly, 1-7/8 in., - Stainless Steel
	Emergency Key Box Assembly	6471A2-45	Emergency Key Box, Assembly, 1-7/8 in., - Silver
	Emergency Key Box Assembly	6471A2-7	Emergency Key Box, Assembly, 1-7/8 in., - Bronze
	Emergency Key Box Assembly	A6471A2-7	Emergency Key Box, Assembly, 2-7/8 in., -Stainless Mirror
	Emergency Key Box Assembly	A6471A2-BR8	Emergency Key Box, Assembly, 2-7/8 in., -Bronze Mirror
	Emergency Key Box Assembly	A6471A2-SS8	Emergency Key Box, Assembly, 2-7/8 in., -Bronze Brushed
	Glass	443J2	Glass
	Glass	443J4	Glass
	Hammer	387B1	Hammer with Safety Chain
	Hook	509D1	Hook

Assembly or Component	Part Name	Part Number	Part Description
Emergency Key Box	Hook	509D1	Hook
Emergency Power Panel	Bar	A299G64	Bar
	Door	AAA406BM1- *	Door, Engraved: Standby Power, A431C Lock
	Door	AAA406BM2- *	Door, Engraved: Elevator Emergency Power, AAA00431AAC Lock
	Door	AAA406BM3-*	Door, Engraved: Standby Power, AAA00431AAC Lock
	Hinge	310LW1	Hinge, Block, w/o Pin
	Hinge	310LW2	Hinge, Block, w/Pin
	Jewel	7069AG121	Jewel Module, Standby Power
	Jewel	7069AG96	Jewel Module, Elevator Emergency Power
	Key	6410W-UTF	Key, AAA00431AAC Lock
	Key	VP-797110	Key, Yale #5957, A431C23 Lock
	Key	VP-797120	Key, Yale #2642, A431C34 Lock
	Key	VP-797130	Key, Yale #3502, A431C35 Lock
	Lock Assembly	A431C23	Lock Assy. w/2 Keys, #5957, Chicago Code, Dull Chrome Finish
	Lock Assembly	A431C34	Lock Assy. w/2 Keys, #2642, NYC Code, Dull Chrome Finish
	Lock Assembly	A431C35	Lock Assy. w/2 Keys, #3502, MA Code, Dull Chrome Finish
	Lock Assembly	AAA00431AAC001-**	Lock Assembly (Illinois) w/2 Keys, ANSI Code
	Push Button Unit	7035C1	Push Button Unit, 5 Buttons, 1st Button Marked: RE others per contract
	Push Button Unit	7035C13	Push Button Unit, 4 Buttons, 1st Button Marked: RE others per contract
	Screw	124DK17	Screw, Tamper-Resistant, Stainless Steel, Mirror Finish
	Screw	124DK18	Screw, Tamper Resistant, Bronze, Mirror Finish
	Screw	124DK5	Screw, Tamper Resistant, Stainless Steel, Brushed Finish
	Screw	124DK6	Screw, Tamper Resistant, Bronze, Brushed Finish

Assembly or Component	Part Name	Part Number	Part Description
Emergency Power Panel	Standoff	354AD22	Standoff
	Stop	477DD1	Stop, Lock
	Terminal	P303BC5	Terminal, 20 Connections
Governor	Governor Assembly	TAA20602B21	Governor Assembly
	Governor Assembly	TAA20602B22	Governor Assembly
	Governor Rope	WRP819-MRF-N	Governor Rope
	Idler Assembly	TAA22700E12	Idler Assembly
	Rope Clip	AAA229AC4	Rope Clip
	Shackle	AAA227E1	Shackle
Hall Lantern, Position Indicator	Bracket	316EAV1	Bracket
	Connector	AAA00176AAD003	Connector, Feed-Through, 6-Circuit
	Connector	AAA447AC3	Connector, Feed-Through, 4-Circuit
	Connector	AAA447AC5	Connector, Feed-Through, 3-Circuit
	Diffuser Mask	449BH2	Diffuser-Mask
	Electrical Box	309BN11	Electrical Box, 3-Gang
	Electrical box	309BN12	Box, Electrical, 5-Gang
	Hall and Position Indicator Assembly	AAA6646EZ5	Assembly, Combination Hall Lantern & Position Indicator, Horizontal Mounting, Less Faceplate w/Gong PC Board-Remote Station
	Hall and Position Indicator Assembly	AAA6646EZ6	Assembly, Combination Hall Lantern & Position Indicator, Horizontal Mounting, Less Faceplate w/Gong PC Board-Remote Station
	Hall Lantern Assembly	AAA6646EZ1	Assembly, Hall Lantern, Horizontal Position Mounting, Less Faceplate w/Gong PC Board-Remote Station
	Hall Lantern Assembly	AAA6646EZ2	Assembly, Hall Lantern, Vertical Mounting, Less Faceplate w/Gong PC Board-Remote Station
	Housing	A396JJ1	Housing
	Housing	A396JL2	Housing
	Lens	443CC1	Lens, Green
	Lens	443CC2	Lens, Red
	O Ring	182H5	O Ring
	P.C. Board	ABA26800PL1	PC Board, Lantern, For Red Filter 443CC2

Assembly or Component	*Part Name*	*Part Number*	*Part Description*
Hall Lantern, Position Indicator	P.C. Board	ABA26800PL2	PC Board, Lantern, For Green Filter 443CC1
	P.C. Board	ACA26800HJ1	PC Board, Position Indicator
	P.C. Board	GBA23550B1	PC Board, Modular Gong
	P.C. Board	GCA23550D1	PC Board, Remote-Station 5 (RS5)
	Position Indicator Assembly	AAA6646EZ3	Assembly, Position Indicator, Horizontal Mounting, Less Faceplate, w/Remote Station PC Board
	Position Indicator Assembly	AAA6646EZ4	Assembly, Position Indicator, Vertical Mounting, Less Faceplate, w/Remote Station PC Board
	Reflector	278HA1	Reflector
	Spacer	462GV1	Spacer
	Spacer	462GV2	Spacer (used with horizontally mounted lantern only)
	Stand-off	354CD57	Stand-Off
	Washer	131CN1	Washer
Hall Panel	Bracket	AAA316FVH1	Bracket, Lamp
	Buzzer	6219F5	Buzzer, American w/Disabilities Act Fixture
	Grounding Hardware	AAA00026AAM001	Hardware for Grounding
	Lamp	424D6	Lamp, DC Bayonet Base, 28.0V, Bulb Style G-6
	Nut	72BX7	Nut, Speed
	P.C. Board	C8121BB1	PC Board, Buffer
	P.C. Board	GAA25005B1	PC Board, Remote-Station 14
	Screw	124DK11	Screw, Spanner Head, Stainless Steel, Mill 4 Finish
	Screw	124DK12	Screw, Spanner Head, Bronze, Satin Finish
	Screw	124DK23	Screw, Spanner Head, Stainless Steel, Mirror Finish
	Screw	124DK24	Screw, Spanner Head, Bronze, Mirror Finish
	Socket	467AX1	Socket, Lamp
	Stand-off	354AG57	Stand-Off, M3 x 0.5, 14.76mm L
	Switch	AAA00177AAD001	Switch, Thermal

Assembly or Component	Part Name	Part Number	Part Description
Hall Panel	Tape	AAA26YC2	Tape, VHB, to: 2.6 in X 0.5 in. (lamp brkt. to face plate)
	Wire	174DD11	Wire, Ground (1 per Keyswitch)
Hall Position Indicator	Clip	72BX7	Clip
	Distance Piece	354AG99	Distance Piece
	Faceplate	147MT1	Faceplate, Stainless Steel, Brushed Finish
	Faceplate	147MT2	Faceplate, Brass, Brushed Finish
	Faceplate	147MT3	Faceplate, Stainless Steel, Mirror Finish
	Faceplate	147MT4	Faceplate, Brass, Mirror Finish
	Faceplate	147MT5	Faceplate, Stainless Steel, Mill 4 Finish
	Lens	443CC1	Lens
	P.C. Board	ACA26800HJ1	PC Board, Position Indicator
	P.C. Board	GCA23550D1	PC Board, Remote Station - 5
	Screw	124DK1	Screw, Spanner Head, Stainless Steel, Brushed Finish
	Screw	124DK13	Screw, Spanner Head, Stainless Steel, Mirror Finish
	Screw	124DK14	Screw, Spanner Head, Brass, Mirror Finish
	Screw	124DK2	Screw, Spanner Head, Brass, Brushed Finish
	Spacer	462GV1	Spacer
	Spacer	462GV4	Spacer
Hydraulic Drive System	Sheave Assembly	AAA22941A2	16 in. Sheave Assembly
	Switch, Mechanical	AAA6098NR1	Slack Rope
	Switch, Mechanical	AAA6098NR2	Slack Rope
	Wedge Clamp	AAA229AC1	Wedge Clamp
Hydraulic Machine	Ball Valve	271AG2	Ball Valve, 2 in. NPT, Threaded At Both Ends
	Ball Valve	271AS1	Ball Valve, Size 2 in., Victaulic Ends
	Control Valve	271AL2	Machine Size 17020S-26050S, Pump port
	Control Valve	271AP10	Machine Size 12020S-15050S, Pump port
	Control Valve	271AP8	Machine Size 5615S-5625S, Pump port
	Control Valve	271AP9	Machine Size 7520S-9440S, Pump port
	Coupling	441AS12	Coupling, Victaulic Style 07, Size 2 in. (Zero-Flex)

Assembly or Component	Part Name	Part Number	Part Description
Hydraulic Machine	Coupling	441AS16	Coupling, Victaulic Style HP-07, Size 2 in. (Rigid Coupling)
	Coupling	441AS3	Coupling, Victaulic Style 77 STD, Size 2 in. (Flexible)
	Dip Stick	269CA1	15 in. L, Used In 80 Gallon Tanks
	Dip Stick	269CA2	17 in. L, Used In 140 & 190 Gallon Tanks
	Gasket	AAA376GK3	Gasket, Victaulic, Size 2 in.
	Heater	615C2	Heater
	Motor	6333DD1	Submersible, 200 volt, 15 HP
	Motor	6333DD12	Submersible, 575 volt, 25 HP
	Motor	6333DD13	Submersible, 200 volt, 30 HP
	Motor	6333DD16	Submersible, 575 volt, 30 HP
	Motor	6333DD17	Submersible, 200 volt, 40 HP
	Motor	6333DD20	Submersible, 575 volt, 40 HP
	Motor	6333DD21	Submersible, 230/460 volt, 15 HP
	Motor	6333DD22	Submersible, 230/460 volt, 20 HP
	Motor	6333DD23	Submersible, 230/460 volt, 25 HP
	Motor	6333DD24	Submersible, 230/460 volt, 30 HP
	Motor	6333DD25	Submersible, 230/460 volt, 40 HP
	Motor	6333DD26	Submersible, 200 volt, 50 HP
	Motor	6333DD27	Submersible, 230/460 volt, 50 HP
	Motor	6333DD28	Submersible, 575 volt, 50 HP
	Motor	6333DD4	Submersible, 575 volt, 15 HP
	Motor	6333DD5	Submersible, 200 volt, 20 HP
	Motor	6333DD8	Submersible, 575 volt, 20 HP
	Motor	6333DD9	Submersible, 200 volt, 25 HP
	Motor	AAA6333ER1	Submersible, 200 volt, 40 HP
	Motor	AAA6333ER2	Submersible, 230/460 volt, 40 HP
	Motor	AAA6333ER3	Submersible, 575 volt, 40 HP
	Motor	AAA6333ER4	Submersible, 200 volt, 50 HP
	Motor	AAA6333ER5	Submersible, 230/460 volt, 50 HP
	Motor	AAA6333ER6	Submersible, 575 volt, 50 HP
	Muffler	AAA726D1	Length 10.1 in.
	Pipe Coupling	377CX2	Pipe Coupling, ¼ in. NPT Int. Both Ends (1.19 in. Overall L)
	Plug	377DR2	Two-Way Shut-Off, ¼ in.
	Pump	6962AE3	Submersible, 200 GPM
	Pump	6962AE4	Submersible, 260 GPM

Assembly or Component	Part Name	Part Number	Part Description
Hydraulic Machine	Pump	6962Y21	Machine Size, 9425S-9440S
	Pump	6962Y22	Machine Size, 12020S-12050S
	Pump	6962Y23	Machine Size, 15025S - 15050S
	Pump	6962Y24	Machine Size, 17020S - 17050S
	Pump	6962Y26	Machine Size, 5615S-5625S
	Pump	6962Y27	Machine Size, 7520S-7540S
	Reducing Coupling	377DT2	Reducing Coupling, ½ in. NPT Int., ¼ in. NPT Int. (1.30 in. Overall L)
	Reducing Coupling	441DE2	Reducing Coupling, ½ in. NPT Int., ¼ in. NPT Ext. (1.69 in. Overall L)
	Reducing Coupling	441DF2	Reducing Coupling, 2 in. NPT Int., 1-½ in. NPT Ext. (4.19 in. Overall L)
	Reducing Coupling	441DH3	Reducing Coupling, 2 in. NPT Ext., 1-½ in. NPT Int. (1.44 in. Overall L)
	Sound Isolation Kit	AAA07070AAA002	Sound Isolation Kit
	Switch	177BH3	Oil Level
	Switch	A177BM2	Pressure, ¼ in. NPT Male Pressure Port
	Switch	AAA659E1	Temperature
	Temperature Strip	AAA298UQ1	Temperature Strip
	Thermal Contact	AAA739H1	Submersible
Interlock Assembly, Techna	Axle	FAA81AA1	Axle, 46.1mm L
	Bumper	AAA320FB1	Bumper, Rubber
	Bushing	321CV3	Bushing, Stainless Steel, 2.0 in. L, w/ Standard Key Unlocking
	Bushing	321CV5	Bushing, Brass, 2.0 in. L, w/ Standard Key Unlocking
	Bushing	334BA5	Snap Bushing
	Bushing	AAA321HG1	Bushing, Stainless Steel, 1.5 in. L, Triangular Unlock Device
	Bushing	AAA321HG2	Bushing, Brass, 1.5 in. L, Triangular Unlocking Device
	Bushing	FAA334H1	Bushing, 33.9mm L, 14.7mm
	Collar	340BJ2	Collar w/Set Screw
	Contact Bridge	AAA661B104	Contact Bridge
	Cover	AAA285QL1	Cover, Formed
	Interlock	ABA23400C1	Interlock Assembly, HPLIM Operator
	Interlock	ABA23400C2	Interlock Asembly, HPLIM Operator

Assembly or Component	Part Name	Part Number	Part Description
Interlock Assembly, Techna	Interlock Switch Assembly	AAA23400E1	Assembly, Interlock Switch
	Interlock Switch Assembly	AAA23400E2	Assembly, Interlock Switch
	Key Hoistway Door, 2 Links	AAA194AZ1	Key, Unlocking, for Standard Thickness
	Key	AAA194AZ6	Key, Unlocking, Hoistway Door >1.25 in., <=3.25 in., 3 Links
	Key	AAA194BC1	Key, Special, Triangular Unlocking Device
	Latch Assembly	ABA23400G1	Latch Assembly
	Latch Assembly	ABA23400G2	Latch Assembly
	Pin	AAA81JR1	Pin, 47.5mm L (NOTE: Thread end is offset)
	Pin	AAA81JR2	Pin, 43.0mm L
	Roller	AAA456XK1	Roller, 38.0mm
	Spring	AAA92BA1	Spring, C/O Doors and S/S Door + 2/S
	Spring	AAA92BA2	Spring, S/S Door + 2/S
	Switch	AAA661B100	Switch
	Unlocking Device	AAA23400J1	Assembly, Unlocking Device, C/O, S/S, or 2/S Doors
	Unlocking Device	AAA23400J2	Assembly, Unlocking Device, S/S, or 2/S Doors
Mechanical Switches	Limit Switch	AAA6098NM1	SPB Circuit
	Limit Switch	AAA6098NM10	DPM Circuit
	Limit Switch	AAA6098NM11	DPM Circuit
	Limit Switch	AAA6098NM12	DPM Circuit
	Limit Switch	AAA6098NM13	DPM Circuit
	Limit Switch	AAA6098NM2	SPB Circuit
	Limit Switch	AAA6098NM3	DPB Circuit
	Limit Switch	AAA6098NM4	DPB Circuit
	Limit Switch	AAA6098NM5	DPB Circuit
	Limit Switch	AAA6098NM6	DPB Circuit
	Limit Switch	AAA6098NM7	SPB Circuit
	Limit Switch	AAA6098NM8	SPM Circuit
	Limit Switch	AAA6098NM9	SPM Circuit
Piping	Piping Kits	AAA20396A1	2 in., Roped System (non-seismic)

Assembly or Component	Part Name	Part Number	Part Description
Piping	Piping Kits	AAA20396A2	2.5 in., Roped System (non-seismic)
	Piping Kits	AAA20396A3	3 in., Roped System (non-seismic)
	Piping Kits	AAA20396A4	2 in., Roped System (seismic)
	Piping Kits	AAA20396A5	2.5 in., Roped System (seismic)
	Piping Kits	AAA20396A6	3 in., Roped System (seismic)
	Piping Kits	AAA6942GQ1	Piping Kit, 2" pipe size
	Piping Kits	AAA6942GQ2	Piping Kit, 2 1/2" pipe size
	Piping Kits	AAA6942GQ3	Piping Kit, 2" pipe size, seismic zone
	Piping Kits	AAA6942GQ4	Piping Kit, 2 1/2" pipe size, seismic zone
Plunger and Cylinder (Roped System)	Roped Jack Assembly	AAA22820F1	4 in. diameter plunger
	Roped Jack Assembly	AAA22820F2	4.5 in. diameter plunger
	Roped Jack Assembly	AAA22820F3	5.5 in. diameter plunger
Plunger and Cylinder Assembly	Packing	AAA182AN1	Packing for Holeless Model, 2.80 in. Diameter
	Packing Diameter	AAA182AN2	Packing for Holeless Model, 3.938 in.
	Packing Kit, Welded Cylinder	AAA182AN3	Plunger Size, Actual 3-15/16", no gasket
	Packing Kit, Welded Cylinder	AAA182AN5	Plunger Size, Actual 4-7/16", no gasket
	Packing Kit, Welded Cylinder	AAA182AN7	Plunger Size, Actual 5-1/2", no gasket
	Packing Kit, Welded Cylinder	AAA182AN9	Plunger Size, Actual 6-9/16", no gasket
Position System	Bracket	AAA316FPW4	Tape Mounting
	Magnet	AAA233J27	Door Zone
	Magnet	AAA233J28	Floor Stop
	Plate	AAA386KXG1	Bottom Plate
	Plate	AAA386KXH1	Top Plate
	Spring	90FC5	Eye Bolt
	Tape	AAA297AV	Stainless
	Tape	AAA297AV	Steel
	Tape Reader Assembly	AAA25550E1	Assembly, Tape Reader
	Tape Reader Assembly	AAA25550E10	Assembly, Tape Reader
	Tape Reader Assembly	AAA25550E11	Assembly, Tape Reader

Assembly or Component	Part Name	Part Number	Part Description
Position System	Tape Reader Assembly	AAA25550E12	Assembly, Tape Reader
	Tape Reader Assembly	AAA25550E13	Assembly, Tape Reader
	Tape Reader Assembly	AAA25550E14	Assembly, Tape Reader
	Tape Reader Assembly	AAA25550E2	Assembly, Tape Reader
	Tape Reader Assembly	AAA25550E3	Assembly, Tape Reader
	Tape Reader Assembly	AAA25550E4	Assembly, Tape Reader
	Tape Reader Assembly	AAA25550E5	Assembly, Tape Reader
	Tape Reader Assembly	AAA25550E6	Assembly, Tape Reader
	Tape Reader Assembly	AAA25550E7	Assembly, Tape Reader
	Tape Reader Assembly	AAA25550E8	Assembly, Tape Reader
	Tape Reader Assembly	AAA25550E9	Assembly, Tape Reader
Position System (Roped)	Final Switch Assembly	ABA25590R13	Top, LH
	Final Switch Assembly	ABA25590R14	Top, RH
	Limit Switch Assembly	ABA25590R1	Top, 100 FPM, RH
	Limit Switch Assembly	ABA25590R10	Bottom, 100 FPM, LH
	Limit Switch Assembly	ABA25590R11	Bottom, 125 FPM, LH
	Limit Switch Assembly	ABA25590R12	Bottom, 150 FPM, LH
	Limit Switch Assembly	ABA25590R2	Top, 125 FPM, RH
	Limit Switch Assembly	ABA25590R3	Top, 150 FPM, RH
	Limit Switch Assembly	ABA25590R4	Bottom, 100 FPM, RH
	Limit Switch Assembly	ABA25590R5	Bottom, 125 FPM, RH
	Limit Switch Assembly	ABA25590R6	Bottom, 150 FPM, RH
	Limit Switch Assembly	ABA25590R7	Top, 100 FPM, LH
	Limit Switch Assembly	ABA25590R8	Top, 125 FPM, LH
	Limit Switch Assembly	ABA25590R9	Top, 150 FPM, LH
	Zoned Access Switch Assembly	ABA25590R15	Top, RH
	Zoned Access Switch Assembly	ABA25590R16	Bottom, RH
	Zoned Access Switch Assembly	ABA25590R17	Top, LH
	Zoned Access Switch Assembly	ABA25590R18	Bottom, LH
Roller Guide Assembly	Assembly	A6261P1	Assembly, Roller Guide Complete w/o Guard (bottom)

Assembly or Component	Part Name	Part Number	Part Description
Roller Guide Assembly	Assembly	A6261P1	Assembly, Roller Guide (Bottom), w/o Guard
	Assembly	A6261P2	(Service Replacement of B6261A7 Only)
	Assembly	A6261P2	Assembly, Roller Guide
	Assembly	A6261P3	(Service Replacement of B6261A1 through 6 Only)
	Assembly	A6261P3	Assembly, Roller Guide
	Assembly	A6261P4	Assembly, Roller Guide Complete w/Guard (top)
	Bolt	58AD68	Bolt, Hex Head, 1/2-13 x 4 in. L, w/Slot in End
	Bolt	58XA143	Bolt, Hex Head, 1/2 in. Dia. x 2-1/4 in. L
	Bolt	58XA145	Bolt, Hex Head, 1/2 in. Dia. x 2-3/4 in. L
	Bolt	65AK1	Bolt, Hex Head, 3/8 in. Dia., 1-3/4 in. L
	Bolt	A59J1	Bolt, 1 in. Dia. Head, 2-1/4 in. L
	Bolt	AAA124FW1	Bolt, Special, M12 x 100
	Bumper	320AF1	Bumper, 1-1/4 in. Square, 1/4 in. W, Leather (for stand)
	Bumper	320AG1	Bumper, 1 in. W, 1-9/16 in. L, 1/4 in. W, Leather (for stand)
	Bumper	V320DA1	Bumper, Rubber Button, 7/8 in. L x 45/64 in. W
	Bushing	335E54	Bushing, 3/4 in., 7/8 in., 1-1/8 in. L, Oil-less (for Levers)
	Bushing	335E84	Bushing, 3/4 in. x 7/8 in., 1-1/8 in. L (for 288LL2 Lever)
	Guard	384LN1	Guard
	Guard	A384MB2	Guard
	Lever	288LL2	Lever, w/Bushing (Postwise)
	Lever	288LM2	Lever, w/Bushing (Front-Back)
	Lever	A288LC1	Lever, w/Bushing
	Lever	A288LC2	Lever, w/Bushing
	Lever	A288LL2	Lever, Postwise, w/Bushing - Metric
	Lever	A288LM2	Lever, Front-Back, w/Bushing - Metric
	Lever	B288HB1	Lever, w/Bushing
	Nut	67E14	Nut
	Pin	A77TN1	Pin, 5/8-11 Thread
	Pin	B77TN1	Pin, M16 Thread

Assembly or Component	Part Name	Part Number	Part Description
Roller Guide Assembly	Ring	172DR15	Ring, Retaining
	Ring	172DR3	Ring, Retaining
	Roller	456AK4	Roller w/Sealed Bearing, no Grease Fitting
	Roller	456CN4	Roller, w/Bearing (Sealed), No Grease Fitting
	Screw	124CA1	Screw, Spring Adjusting, 3/4 Thread
	Screw	A124CA1	Screw, Spring Adjusting, M20 Thread
	Spring	90BC12	Spring, 13/16 in., 13 Active Turns
	Spring	90BC9	Spring, Front & Back Roller (Green Stripe), 9/16 in.
	Spring	90HC4	Spring, Postwise Roller (Yellow Stripe), 21/32 in., 3 in. L
	Spring	91B19	Spring, 5/8 in., 1-19/32 in. L, 9 Active Turns
	Washer	127VB31	Washer, Seat, 17/32 in., 1-1/4 in., 1/16 in. W
	Washer	AAA127CC1	Washer
Safety Linkage	Lift Rod	AAA24120S1	Lift Rod
	Pad	310BE13	Rubber
	Safety Block	KO312F5	Safety Block
	Safety Block	KO312F6	Safety Block
	Spring	90CX4	Spring
Safety Linkage (Roped)	Safety Linkage Assembly	AAA24050A1	2000/2100 Duty
	Safety Linkage Assembly	AAA24050A2	2500/3000/3500 Duty
	Safety Linkage Assembly	AAA24050A3	5000 Duty
	Safety Linkage Assembly	AAA24050A4	4500 Duty
Tape Reader Assembly	Bolt	AAA65FP1	Eye-bolt
	Bracket	AAA22439F1	Assembly, Rear Door Bracket
	Bracket	AAA316FCN1	Bracket, Lower Tape
	Guide	AAA385PY1	Guide
	Guide	ABA385AAC1	Guide
	Magnet	AAA233J27	Magnet, South Polarity (ID by straight line groove), 127mm L

Assembly or Component	Part Name	Part Number	Part Description
Tape Reader Assembly	Magnet	AAA233J28	Magnet, South Polarity (ID by straight line groove), 152.4 mm L
	P.C. Board	AAA26800SB2	P.C. Board, Tape Reader, 211
	Plate	AAA386CAL1	Plate
	Plate	AAA386CAM1	Plate
	Sensor	AAA22439F2	Assembly, Inspection Limit Sensor
	Sensor	AAA627AAB11	Sensor, Digital, Details Above
	Sensor	AAA627AAB12	Sensor, Digital, Details Above
	Spacer	AAA462HV2	Spacer
	Spring	90FC5	Spring
	Switch	AAA608B2	Switch, Proximity
	Tape	CAA297A1	Tape, Steel, 100 mm W, L = Rise + 6500 mm
	Tape	CAA297A2	Tape, Stainless Steel, 100 mm W, L = Rise + 6500 mm
	Tape Reader	ABA22439AAF9	Assembly, Tape Reader, 211
	Tool	AAA27AS1	Tool, Magnet Alignment 211/211M
	Washer	127VB149	Washer, Flat
Sound Isolation	Sound Isolation Pad	AAA310PJ1	Ten Holes
	Sound Isolation Pad	AAA310PJ2	Sixteen Holes
Top of Car Integration Box	Battery	AAA718E6	Battery, Rechargeable
	Bell	AAA311E1	Bell, 6 in., 6 Volts DC (except Canada)
	Bell	AAA311E3	Bell, 6 in., 6 Volts DC (Canada only)
	Fuse	AAA375BY15	Fuse, 0.5 A, Time-Delay (XF1)
	Fuse	AAA375CF5	Fuse, 4.0 A (XF2)
	Guard	AAA384ABX1	Guard, Lamp
	Lamp	6599D14	Lamp, 125 V, 100 W
	Lamp	6599D15	Lamp, 250 V, 100 W
	Lamp Holder	AAA618D1	Lamp Holder
	P.C. Board	AAA26800TU1	PC Board, Emergency Lighting (NAA & Canada)
	P.C. Board	AAA26800TU2	PC Board, Emergency Lighting (International)
	P.C. Board	GBA23550B1	PC Board, Gong W/O Mounting Brackets
	Receptacle	641A4	Receptacle, Ground Fault Current Interrupter (GFCI) (NAA & Canada)

Assembly or Component	Part Name	Part Number	Part Description
Top of Car Integration Box	Receptacle	AAA648C2	Receptacle, 15 A @ 250 V (International only)
	Switch	177DE1	Switch, Emergency Stop
	Switch	177DM1	Switch, Rocker, 1-Pole
Weight Closer	Cable	AAA174N1	Cable w/End Rods, L=2318 mm
	Cable	AAA174N16	Cable w/End Rods, L=2270 mm
	Cable	AAA174N17	Cable w/End Rods, L=2370 mm
	Cable	AAA174N18	Cable w/End Rods, L=2670 mm
	Cable	AAA174N19	Cable w/End Rods, L=1433 mm
	Cable	AAA174N2	Cable w/End Rods, L=2622 mm
	Cable	AAA174N20	Cable w/End Rods, L=1633 mm
	Cable	AAA174N3	Cable w/End Rods, L=2470 mm
	Cable	AAA174N4	Cable w/End Rods, L=2770 mm
	Cable	AAA174N5	Cable w/End Rods, L=2570 mm
	Cable	AAA174N6	Cable w/End Rods, L=2927 mm
	Cable	AAA174N7	Cable w/End Rods, L=1467 mm
	Cable	AAA174N8	Cable w/End Rods, L=1771 mm
	O Ring	182H60	O Ring
	Pulley	AAA198AM1	Pulley
	Pulley Assembly	AAA24450H1	Assembly, Pulley
	Retaining Ring	DIN471N-17-480HV-B	Ring, Retaining

Appendix C

Appendix C: Instruction for Operating CD-Rom

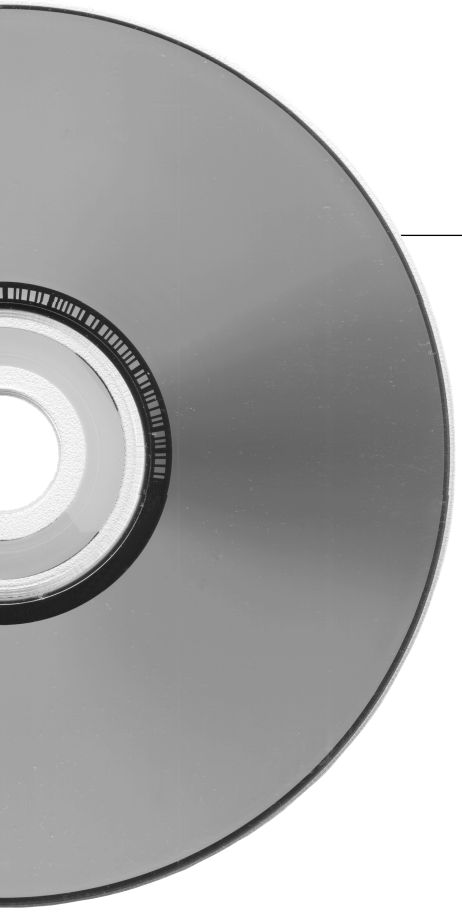

All the information contained in this Owner's Information Manual is captured electronically on the compact disc found in the back of this book. The four main chapters, Appendix A, and Appendix B are saved as separate portable document format (pdf) files and can be viewed using Adobe® Acrobat 3.0 software. Simply place the disc in your cd-rom drive and double-click on the icon of the chapter you want to view.

Index

New Products 90
Code Compliance 98
Awareness 22
Introduction 38
The Pump 57
The QL Operator 65
The Control Valve 57
Utility Outlet 69
Firefighters' 73
Express Priority Service 76
LVML 80
Buzzer 76
Performance Messages 50
Car Call Cut-Off 71
LVM 78
LVME 82
General Descriptions 84
Appendix A 99
Awareness 20
LAMBDA 3D 25
Counterweight Screening 26
Emergency Procedures 30
Preface 4
Replacement Parts 112
Express Priority Service 76
LVML 80
Buzzer 70

Index

A

Alarm Bell 29
American with Disabilities Act 71

B

Buttons 69

C

Car Operating Panel (COP) 68
Card Reader 72
CD-Rom Instructions 130
Closed Loop Control 65
Control Board 49
Counterweight Screening 34
Cylinder 56, 57, 60

D

Dispatching 22
Door Control 48, 49
Door Operator 64, 65, 66

E

Eiffel Tower 13
Elevonic 18, 20
Emergency Power 38
Emergency Return Unit 54
Emergency Situations 38
Emergency Stop 69
Escalator 14

F

Fall Protection 34
Fireman's Service 38, 73, 74
Fixtures 68
Flow Rate 59

G

Ground Contamination 61

H

Holed model (LVM) 48, 60, 78
Holeless model (LVML) 48, 60, 62, 80
Hydraulic Control Valve 59

I

I-Motion Door operator 66, 67
Independent Service 76
Intercoms 29

J

Jewels 69

K

Keyswitches 69, 71

L

LAMBDA 33, 40
LED 50, 52
Leveling 28
Light Emitting Diodes (LED) 50, 52
Lockout/tagout 35
Low-Rise Models 48, 78
LVM 48, 60, 78
LVME 48, 60, 62, 82
LVML 48, 60, 62, 80

M

Machine Room 84
Maintenance 88
Mechanical Door Restrictor 32
Microprocessor Control 18, 41, 49
Motion Control 48, 49
Motor 57

N

Nudging 66

O

On-Board Display 50, 96
Operational Control 48, 49
Otis Maintenance
Management System 80
Otis Service Center 90
Otis Test Tower 91
Otis, Elisha Graves 10
OTISLINE 50, 51, 52, 55, 71,89
OtisWave 89

P

Performance Messages 52
Plunger 48, 56, 60
Polyvinyl Chloride Tube 42, 61, 78
Position Indicator 68
Positioning Equipment 63
Printed Circuit Board 49
Programmed Memory 49
Pump 59
PVC 42, 61, 78

R

Reader Box 63, 85
Reader Tape 63, 85
REM 19, 40, 50, 51, 62, 88
Remote Elevator
Monitoring (REM)19, 40, 50, 51, 62, 88
Replacement Parts 107
Roped model (LVME) 48, 60, 62, 82

S

Safety Chain 32, 66
Safety Shoe 28
SES 38
Shuttles 21
Starting Current 57
Stop Switch 29

T

Telephone Cabinet 70
TRAV-O-LATOR 21

U

United Technologies Corporation 16

COUNTRY LANE 2.0 MG
ELEVATED STORAGE TANK

CITY OF ROCKWALL, TEXAS

SPECIFICATION SECTION: TS4

OPERATIONS & MAINTENANCE MANUAL

HVAC

TABLE OF CONTENTS:

1. **ROOM AIR CONDITIONER**
2. **SPLIT SYSTEM HEAT PUMP AIR HANDLER**
3. **ELECTRIC HEAT**
4. **SPLIT SYSTEM HEAT PUMP CONDENSERS**
5. **HEAD PRESSURE CONTROL**

SUBCONTRACTOR

TEMP SAT
CONTACT: MARC LA BRECQUE
POST OFFICE BOX 801443
DALLAS, TEXAS 75380
(972) 272-4964

GENERAL CONTRACTOR

LANDMARK STRUCTURES I, LP
1665 HARMON ROAD
FORT WORTH, TEXAS 76177
(817) 439-8888

ROOM AIR CONDITIONER

MANUFACTURER:	**LG**
MODEL #:	**LSU 122CE**
SIZE:	**115 V / 60 HZ** **SINGLE PHASE**

http://www.lgservice.com

LG

ENGLISH

FRANÇAIS

ESPAÑOL

LG
Room Air Conditioner

OWNER'S MANUAL

Prior to installation, this air-conditioning unit must be submitted for approval by the utility service which provides electricity
(EN 61000-2, EN 61000-3 Norm).

IMPORTANT

- **Please read this owner's manual carefully and thoroughly before installing and operating your room air conditioner.**
- **Please retain this owner's manual for future reference after reading it thoroughly.**

TABLE OF CONTENTS

Safety Precautions.....3

Prior to Operation 9

Introduction.....10

Electrical Safety 11

Operating Instructions.....12

Maintenance and Service 26

FOR YOUR RECORDS

Write the model and serial numbers here:

Model #

Serial #

You can find them on a label on the side of each unit.

Dealer's Name

Date Purchased

■ Staple your receipt to this page in the event you need it to prove date of purchase or for warranty issues.

READ THIS MANUAL

Inside you will find many helpful hints on how to use and maintain your air conditioner properly. Just a little preventive care on your part can save you a great deal of time and money over the life of your air conditioner.

You'll find many answers to common problems in the chart of troubleshooting tips. If you review our chart of

Troubleshooting Tips first, you may not need to call for service at all.

PRECAUTION

- **Contact the authorized service technician for repair or maintenance of this unit.**
- **Contact the installer for installation of this unit.**
- **The air conditioner is not intended for use by young children or invalids without supervision.**
- **Young children should be supervised to ensure that they do not play with the air conditioner.**
- **When the power cord is to be replaced, replacement work shall be performed by authorized personnel only using only genuine replacement parts.**
- **Installation work must be performed in accordance with the National Electric Code by qualified and authorized personnel only.**

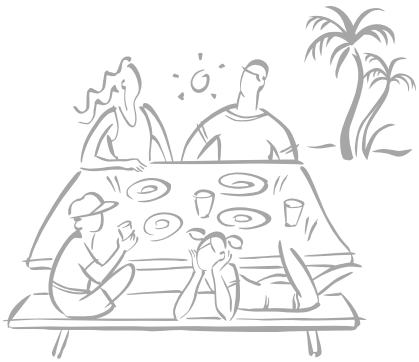

Safety Precautions

ENGLISH

To prevent the injury of the user or other people and property damage, the following instructions must be followed.

■ Incorrect operation due to ignoring instruction will cause harm or damage. The seriousness is classified by the following indications.

⚠ WARNING	This symbol indicates the possibility of death or serious injury.
⚠ CAUTION	This symbol indicates the possibility of injury or damage to properties only.

■ The meanings of the symbols used in this manual are as shown below.

⃠	**Be sure not to do.**
❗	**Be sure to follow the instruction.**

⚠ WARNING

■ Installation

Do not use damaged power cords, plugs, or a loose socket.

• There is risk of fire or electric shock.

For electrical work, contact the dealer, seller, a qualified electrician, or an Authorized Service Center.

• There is risk of fire or electric shock.

Always use the power plug and socket with the ground terminal.

• There is risk of electric shock.

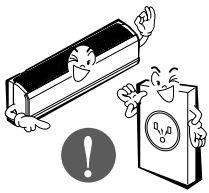

Install the panel and the cover of control box securely.

• There is risk of fire or electric shock.

Do not modify or extend the power cord.

• There is risk of fire or electric shock.

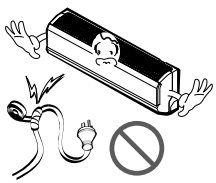

Do not install, remove, or re-install the unit by yourself (customer).

• There is risk of fire, electric shock, explosion or injury.

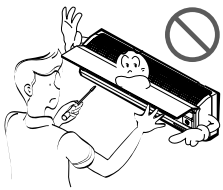

Be cautious when unpacking and installing the product.

- Shape edges could cause injury. Be especially careful of the sharp edges.

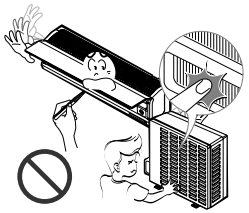

For installation, always contact the dealer or an Authorized Service Center.

- There is risk of fire, electric shock, explosion, or injury.

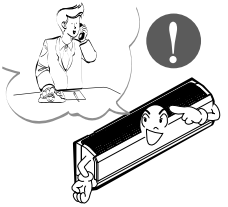

Do not install the product on a defective installation stand.

- It may cause injury, accident, or damage to the product.

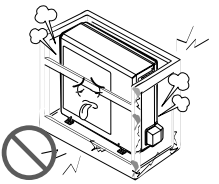

Be sure the installation area does not deteriorate with age.

- If the base collapses, the air conditioner could fall with it, causing property damage, product failure, and personal injury.

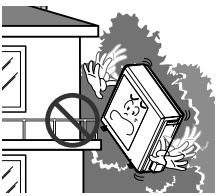

Install the indoor unit on the wall where the height from the floors more then 8ft(2.4m)

- There are sharp moving parts that could cause personal injury.

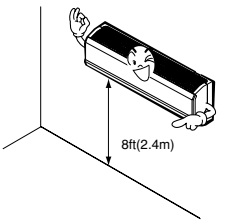

Do not handle the pipe by yourself(Costomer)

- High-Pressure refrigent may cause personal injury.

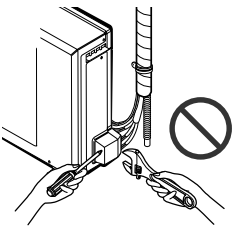

■ Operation

Use a dedicated outlet for this appliance.

- There is risk of fire or electric shock.

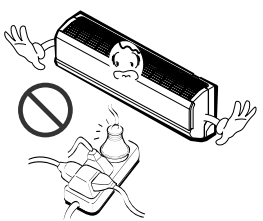

Grasp the plug to remove the cord from the outlet. Do not touch it with wet hands.

- There is risk of fire or electric shock.

Do not allow water to run into electric part.

- There is risk of fire, failure of the product, and/or electric shock.

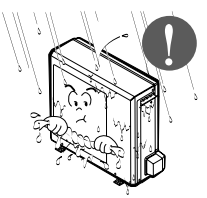

Do not place a heater or other appliances near the power cable.

- There is risk of fire, failure of the product, and/or electric shock.

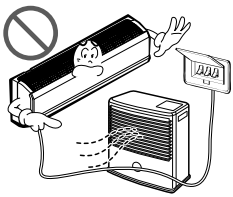

Do not let the air conditioner run for a long time when the humidity is very high and a door or a window is left open.

- Moisture may condense and wet or damage furnishings.

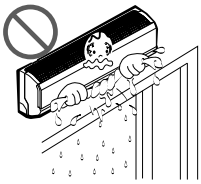

Do not store of use flammable gas or combustibles near the air conditioner.

- There is risk of fire or product failure.

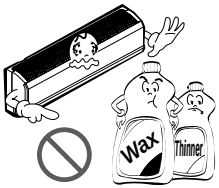

Do not use the product in a tightly closed space for a long time.

- Oxygen deficiency could occur.
- Some ventilation by opening window is necessary for the fresh air

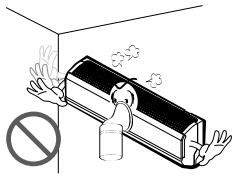

When flammable gas leaks, turn off the gas and open a window for ventilation before turning the product on. Do not use the telephone or turn switches on or off.

- There is risk of explosion or fire.

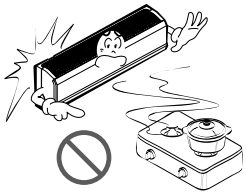

Unplug the unit if strange sounds odors or smoke comes from it.

- There is risk of fire, Product faiure, and/or electric shock.

Stop operation and close any window in storm or hurricane before the hurricane arrives.

- There is risk of property damage, failure of product, or electric shock.

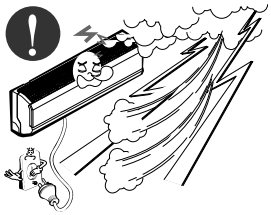

Do not open the inlet grill of the product during operation. (Do not touch the electrostatic filter, if the unit is so equipped.)

- There is risk of physical injury, electric shock, or product.

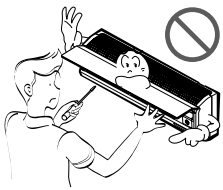

When the product is soaked (flooded or submerged), contact an Authorized Service Center.

- There is risk of electrical shock.

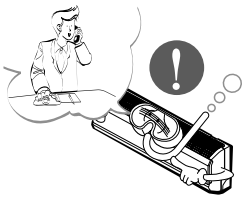

Ventilate the product from time to time when operating it together with a stove, etc.

- There is risk of fire or electrical shock.

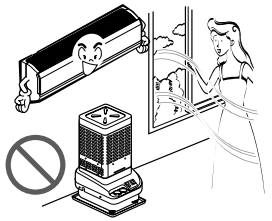

Unplug the appliance before performing cleaning or maintenance.

- There is risk of electric shock.

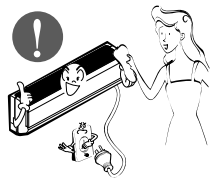

When the product is not be used for a long time disconnect the power supply plug or turn off the breaker.

- There is risk of product damage or failure, or unintended operation.

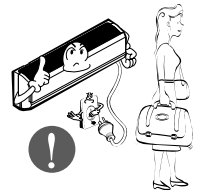

⚠ CAUTION

■ Installation

Take care to ensure that nobody could step on or fall onto the outdoor unit.

- There could result in personal injury and product damage.

Do not insert hands or other objects through the air inlet or outlet while the air conditioner is plugged in.

- There are sharp and moving parts that could cause personal injury.

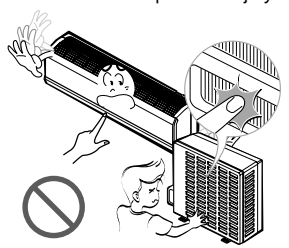

Always check for gas(refrigerant) leakage after installation or repair of product.

- Low refrigerant levels may cause product failure.

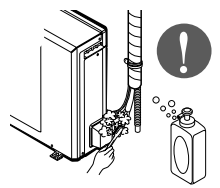

Install the drain hose to ensure that water is drained away properly.

- A bad connection may cause water leakage.

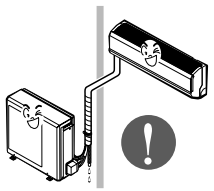

Keep level even when installing the product.

- To avoid vibration or water leakage.

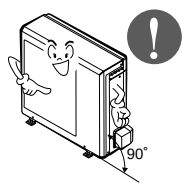

Do not install the product where the noise or hot air from the outdoor unit could damage the neighborhoods.

- It may cause a problem for your neighbors.

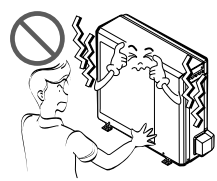

■ Operation

Use two or more people to lift and transport the air conditioner.

• Avoid personal injury.

Do not install the product where it will be exposed to sea wind (salt spray) directly.

• It may cause corrosion in the product. Corrosion, particularly on the condenser and evaporator fins, could cause product malfunction or inefficient operation.

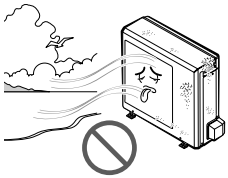

Do not direct airflow at room occupants.

• This could damage your health.

Do not use the product for special purposes, such as preserving foods, works of art, etc. It is a consumer air conditioner, not a precision refrigeration system.

• There is risk of damage or loss of property.

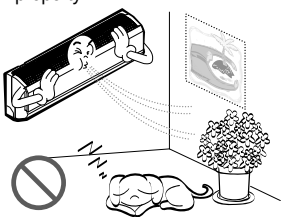

Do not block the inlet or outlet of air flow.

• It may cause product failure.

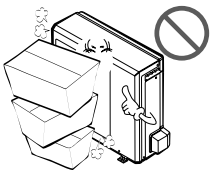

Use a soft cloth to clean. Do not use harsh detergents, solvents, etc.

• There is risk of fire, electric shock or damage to the plastic parts of the product.

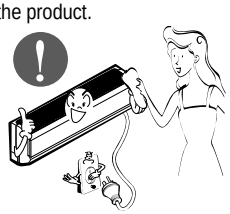

Do not touch the metal parts of the product when removing the air filter. They are very sharp!

• There is risk of personal injury.

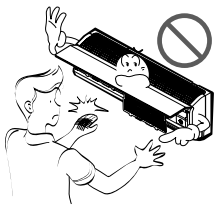

Do not step on or put anything on the product. (outdoor unit)

• There is risk of personal injury and failure of product.

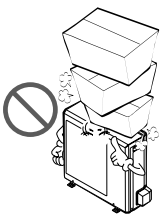

Always insert the filter securely. Clean the filter every two weeks or more often if necessary.

• A dirty filter reduces the efficiency of the air conditioner and could cause product malfunction or damage.

Do not drink the water drained from the unit.

- It is not sanitary and could cause serious health issues.

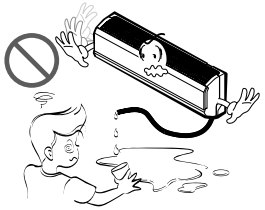

Use a firm stool or ladder when cleaning or maintaining the air conditioner.

- Be careful and avoid personal injury.

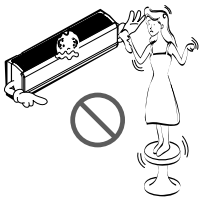

Replace all the batteries in the remote.

- There is risk of fire or explosion.

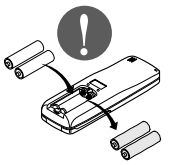

■ Disuse

Do not recharge or disassemble the batteries. Do not dispose of batteries in a fire.

- They may burn or explode.

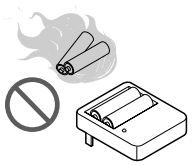

If the liquid from the batteries gets onto your skin or clothes, wash it well with clean water. Do not use the remote if the batteries have leaked.

- The chemicals in batteries could cause burns or other health hazards.

If you eat the liquid from the batteries, brush your teeth and see doctor. Do not use the remote if the batteries have leaked.

- The chemicals in batteries could cause burns or other health hazards.

Prior To Operation

Preparing For Operation

1. Contact an installation specialist for installation.
2. Plug in the power plug properly.
3. Use a dedicated circuit.
4. Do not use an extension cord.
5. Do not start/stop operation by plugging/unplugging the power cord.
6. If the cord/plug is damaged, ony replace it with an authorized replacement part.

Usage

1. Being exposed to direct airflow for a long time may be hazardous to your health. Do not expose occupants, pets, or plants to direct airflow for a long time.
2. Ventilate the room when the air conditioner is used with other heating devices. Otherwise the oxygen supply may be inadequate.
3. Do not use this air conditioner for non-specified special purpose (e.g. preserving precision devices, food, pets, plants, or art objects). Such use may damage your properties.

Cleaning And Maintenance

1. Do not touch the metal parts of the unit when removing the filter. Injury can occur.
2. Do not use water to clean inside the air conditioner. Exposure to water can destroy the insulation, leading to electric shock.
3. When cleaning the unit, first make sure that the power and breaker are turned off. The fan rotates at a very high speed during operation. There is a possibility of injury if the unit power is accidently turned on while the interior of the unit is being cleaned.

Service

For repair and maintenance, contact your authorized service dealer.

Introduction

Symbols Used In This Manual

This symbol alerts you to the risk of electric shock.

This symbol alerts you to hazards that may cause harm to the air conditioner.

NOTICE **This symbol indicates special notes.**

Features

⚠ WARNING

- This appliance should be installed in accordance with national wiring regulations. This guide acts as a guide to help to explain product features.

Indoor

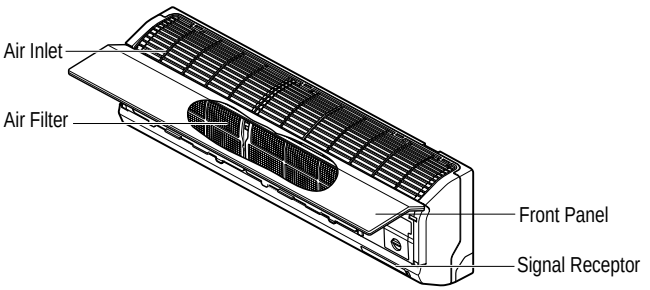

Outdoor

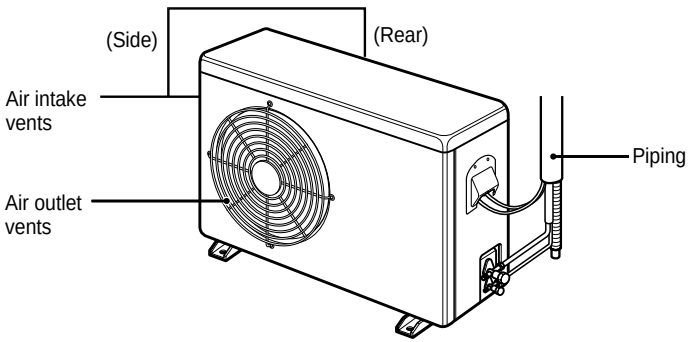

Electrical Safety

⚠ WARNING

- This appliance must be properly grounded.
  To minimize the risk of electric shock, you must alway plug into a grounded oulet

- Do not cut or remove the grounding prong from the power plug.

- Attaching the adapter ground terminal to the wall receptacle cover screw does not ground the appliance unless the cover screw is metal and not insulated, and the wall receptacle is grounded through the house wiring.

- If you have any doubt whether the air conditioner is properly grounded, have the wall receptacle and circuit checked by a qualified electrician.

Operating Instruction

How To Insert The Batteries

1. Remove the battery cover by pulling it according to the arrow direction.
2. Insert new batteries making sure that the (+) and (-) of battery are installed correctly.
3. Reattach the cover by sliding it back into position.

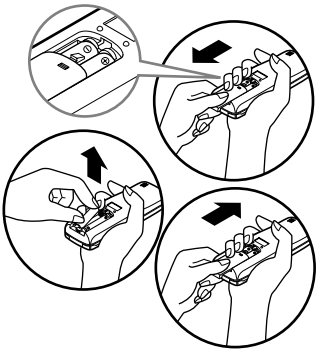

NOTICE Use 2 AAA(1.5volt) batteries.
Do not use rechargeable batteries.

Storage And Tips For Using The Remote Controler

- The remote controler may be stored by mounting it on a wall.
- To operate the room air conditioner, aim the remote control at the signal receptor.

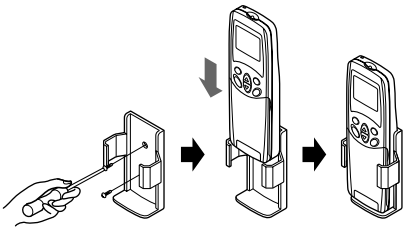

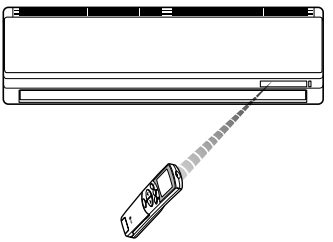

Signal Receptor

Receives the signals from the remote control.(Signal receiving sound: two short beeps or one long beep.)

Operation Indication Lamps

	On/Off	: Lights up during the system operation, error code and auto restart setting.
	Sleep mode	: Lights up during sleep mode auto operation.
	Plasma	: The function illustrates its dynamic mode by using a multiple lighting system.
	Timer	: Lights up during timer operation.
	Defrost mode	: Lights up during defrost mode or ***hot start operation** (Heat pump model only)
OUT DOOR	Outdoor unit operation	: Lights up during outdoor unit operation. (Cooling model only)
88	Power Display	: Indicates the setting temperature and operation mode.

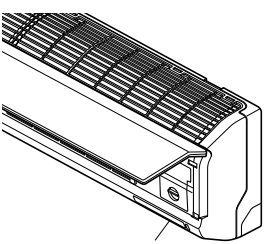

Operation indicating lamps

Remote Control Operations

Controls

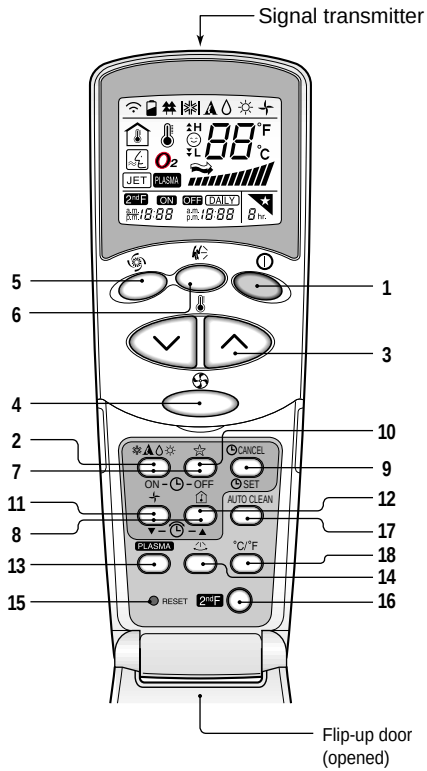

Operation Mode

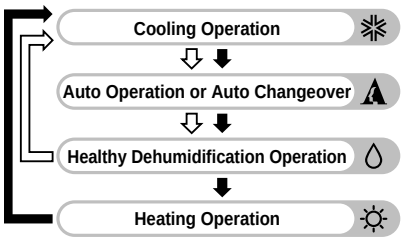

• Cooling Model(⇩), Heat Pump Model(⬇)

1. START/STOP BUTTON
Operation starts when this button is pressed and stops when the button is pressed again.

2. OPERATION MODE SELECTION BUTTON
Used to select the operation mode.

3. ROOM TEMPERATURE SETTING BUTTONS
Used to select the room temperature.

4. INDOOR FAN SPEED SELECTOR
Used to select fan speed in four steps low, medium, high and CHAOS.

5. JET COOL
Used to start or stop the speed cooling.(speed cooling operates super high fan speed in cooling mode.)

6. CHAOS SWING BUTTON
Used to stop or start louver movement and set the desired up/down airflow direction.

7. ON/OFF TIMER BUTTONS
Used to set the time of starting and stopping operation. (See page 22)

8. TIME SETTING BUTTONS
Used to adjust the time. (See page 22)

9. TIMER SET/CANCEL BUTTON
Used to set the timer when the desired time is obtained and to cancel the Timer operation. (See page 22)

10. SLEEP MODE AUTO BUTTON
Used to set Sleep Mode Auto operation. (See page 22)

11. AIR CIRCULATION BUTTON
Used to circulate the room air without cooling or heating. (See page 23)

12. ROOM TEMPERATURE CHECKING BUTTON
Used to check the room temperature.

13. NEO PLASMA(OPTIONAL)
Used to start or stop the plasma-purification function. (See page 20)

14. HORIZONTAL AIRFLOW DIRECTION CONTROL BUTTON (OPTIONAL)
Used to set the desired horizontal airflow direction.

15. RESET BUTTON
Used prior to resetting time.

16. 2nd F Button
Used prior to using modes printed in blue at the bottom of buttons. (See page 21)

17. AUTO CLEAN (OPTIONAL)
Used to set Auto Clean mode.

18. ˚C TO ˚F SWITCHING BUTTON
Used to switch temperature reading from Centigrade to Fahrenheit.

Cooling operation

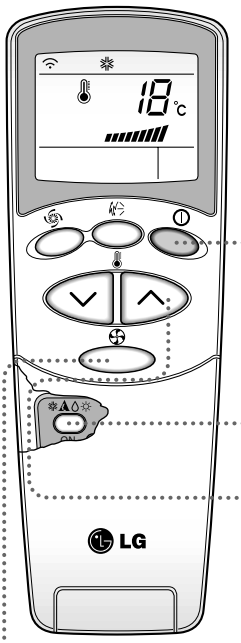

1 Press the Start/Stop button. The unit will respond with a beep.

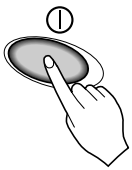

2 Open the door of the remote controller. To select **Cooling Operation**, press the Operation Mode Selection button. Each time the button is pressed, the operation mode is shifted in the direction of the arrow.

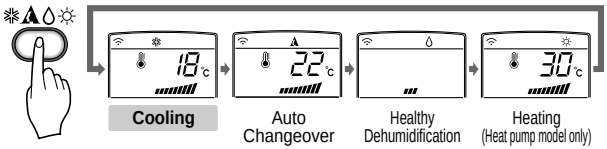

3 Close the door of the remote controller. Set the temperature lower than the room temperature. The temperature can be set within a range of 18°C~30°C(64°F~86°F) at intervals of 1°C(2°F).

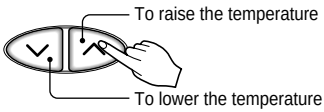

4 Set the fan speed again with the door of the remote controller still closed. You can select the fan speed in four steps-low, medium, high and CHAOS. Each time the button is pressed, the fan speed mode is shifted.

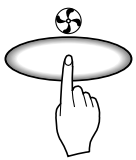

Gentle Breeze by the CHAOS logic

❑ For fresher feeling, press the Indoor fan speed selector and set to CHAOS mode. In this mode, the wind blows like a natural breeze by automatically changing fan speed according to the CHAOS logic.

Auto operation (Optional)

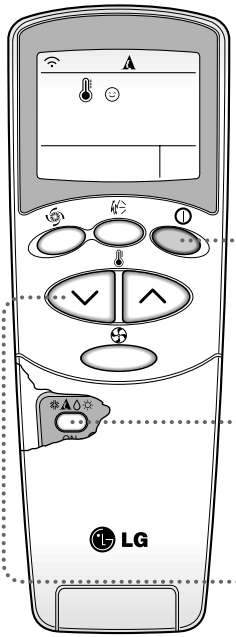

1 Press the Start/Stop button. The unit will respond with a beep.

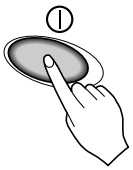

2 Open the door of the remote controller. To select **Auto Operation**, press the operation mode selection button. Each time the button is pressed, the operation mode is shifted in the direction of the arrow.

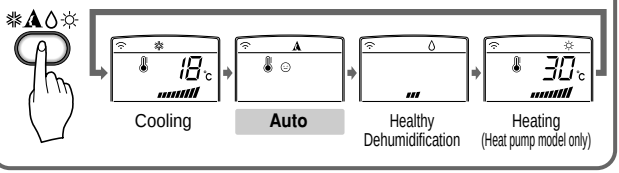

3 The temperature and fan speed are automatically set by the electronic controls based on the actual room temperature. If you want to change the set temperature, press the Room Temperature Setting buttons. The cooler or warmer you feel, the more times (up to two times) you should press the button. The set temperature will be changed automatically.

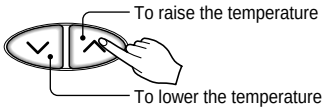

During Auto Operation

- ❑ You cannot control the indoor fan speed. It has already been set by the Fuzzy rule.
- ❑ If the system is not operating as desired, manually switch to another mode. The system will not automatically switch from the cooling mode to the heating mode, or from heating mode to cooling mode, it must be done by manually resetting.
- ❑ During Auto Operation, pressing the CHAOS swing button makes the horizontal louvers swing up and down automatically. If you want to stop auto-swing, press the CHAOS swing button again.

Auto changeover operation(Optional)

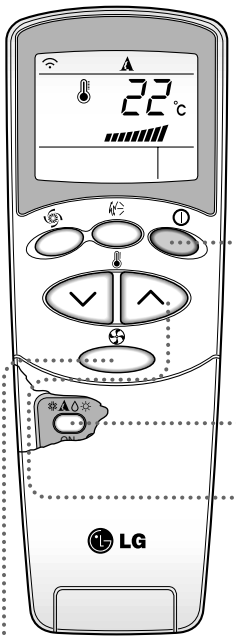

1 Press the Start/Stop button.
The unit will respond with a beep.

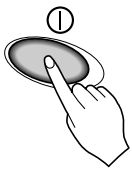

2 Open the door of the remote controller. To select **Auto Changeover Operation**, press the Operation Mode Selection button.
Each time the button is pressed, the operation mode is shifted in the direction of the arrow.

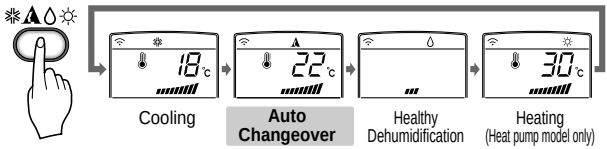

3 Close the door of the remote controller. Set the temperature lower than the room temperature. The temperature can be set within a range of 18°C~30°C(64°F~86°F) at intervals of 1°C(2°F).

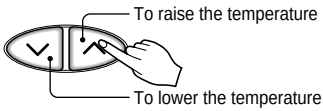

4 Set the fan speed again with the door of the remote controller still closed.
You can select the fan speed in four steps-low, medium, high and CHAOS.
Each time the button is pressed, the fan speed mode is shifted.

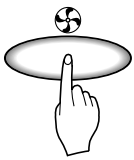

During Auto Changeover Operation

The air conditioner changes the operation mode automatically to keep indoor temperature. When room temperature varies over ±2°C from the set temperature, air conditioner keeps the room temperature within ±2°C of the set temperature by auto changeover mode.

Healthy dehumidification operation

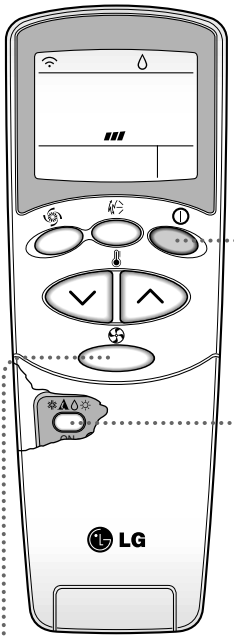

1 Press the Start/Stop button. The unit will respond with a beep.

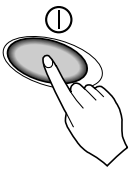

2 Open the door of the remote controller. To select **Healthy Dehumidification Operation**, press the Operation Mode Selection button.
Each time the button is pressed, the operation mode is shifted in the direction of the arrow.

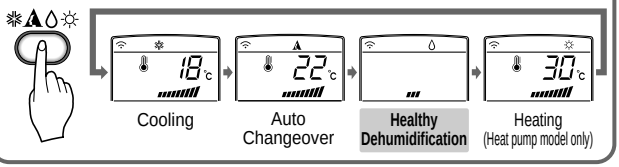

3 Set the fan speed again with the door of the remote controller still closed. You can select the fan speed in four steps-low, medium, high, or CHAOS. Each time the button is pressed, the fan speed mode is shifted.

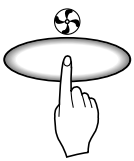

Gentle Breeze by the CHAOS logic

❑ For fresher feeling, press the Indoor Fan Speed Selector and set to CHAOS mode. In this mode, the wind blows like a natural breeze by automatically changing fan speed according to the CHAOS logic.

During Healthy Dehumidification Operation

❑ If you select the dehumidification mode on the operation selection button, the product starts to run the dehumidification function. It automatically sets the room temp. and airflow volume to the best condition for dehumidification, based on the sensed current room temp.

In this case, however, the setting temperature. is not displayed on the remote controller and you are not able to control the room temperature. either.

❑ During the healthy dehumidification function, the airflow volume is automatically set according to the optimization algorithm responding to the current room temp. status, so the room condition is kept healthy and comfortable even in the very humid season.

Heating operation (Heat pump model only)

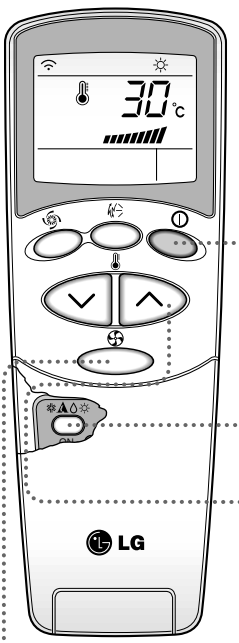

1 Press the Start/Stop button. The unit will respond with a beep.

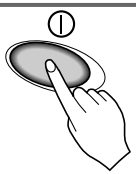

2 Open the door of the remote controller. To select **Heating Operation**, press the Operation Mode Selection button. Each time the button is pressed, the operation mode is shifted in the direction of the arrow.

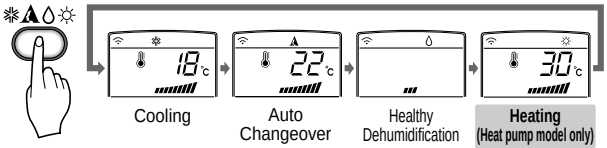

3 Close the door of the remote controller. Set the temperature higher than the room temperature. The temperature can be set within a range of 16°C~30°C(60°F~86°F) at intervals of 1°C(2°F).

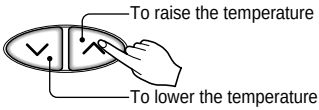

4 Set the fan speed again with the door of the remote controller still closed. You can select the fan speed in four steps–low, medium, high and CHAOS. Each time the button is pressed, the fan speed mode is shifted.

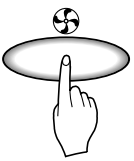

Gentle Breeze by the CHAOS logic

❑ For fresher feeling, press the Indoor Fan Speed Selector and set to CHAOS mode. In this mode, the wind blows like a natural breeze by automatically changing fan speed according to the CHAOS logic.

Jet cool operation

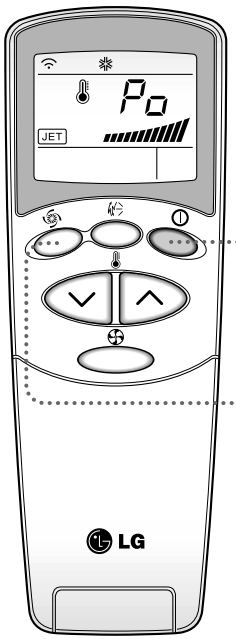

1 Press the Start/Stop button. The unit will respond with a beep.

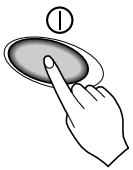

2 Press the **Jet Cool** button to operate the speed cooling mode and the unit will operate at super high fan speed on cooling mode for 30 minutes.

3 To cancel the **Jet Cool** mode, press the **Jet Cool** button, the fan speed button or the room temperature setting button again and the unit will operate at high fan speed on cooling mode.

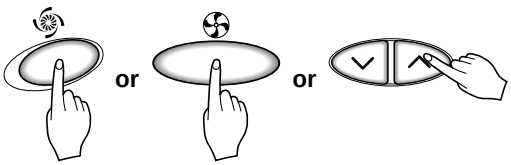

NOTICE

❏ During the JET COOL function at any moment, the A/C starts to blow the cool air at extremely high speed for 30 minutes setting the room temperature. automatically to 18°C. It is especially used to cool the room temperature. quickly in a hot summer.

In heat pump mode or auto changeover mode, however, the JET COOL function is not available.

❏ In order to return to the normal cooling mode from the JET COOL mode, just press the operation mode selection button, airflow volume selection, temperature. setting button or the JET COOL button again.

NEO PLASMA purification operation(Optional)

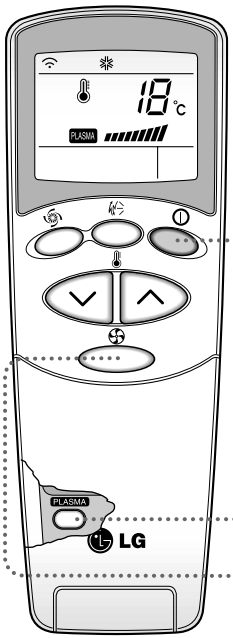

1 Press the Start/Stop button. The unit will respond with a beep.

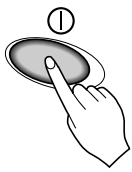

2 Open the door of the remote controller. Press the PLASMA button.
Operation will start when the button is pressed and stop when the button is pressed again.

3 Set the fan speed again with the door of the remote controller closed. You can select the fan speed in four steps-low, medium, high or CHAOS.
Each time the button is pressed, the fan speed mode is shifted.

❋ Air purifying operation (NEO PLASMA) can be with cooling, Heating or any other operations.

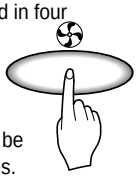

NEO PLASMA Air Purifying Operation only

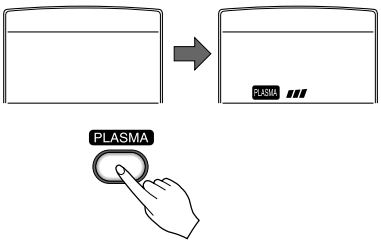

If you press the only PLASMA button, only PLASMA purification function operates. Then, fan speed is low. You can select the fan speed in four steps-low, medium, high or CHAOS.
Each time the Indoor Fan Speed Selector button is pressed, the fan speed mode is shifted.

2nd F operation

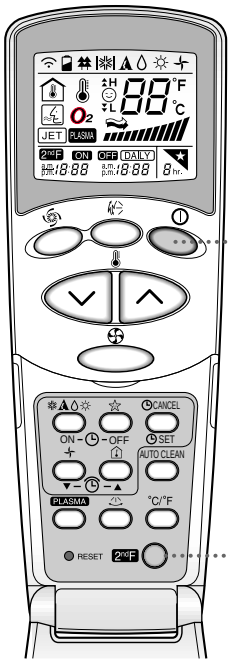

1 Press the Start/Stop button.
The unit will respond with a beep.

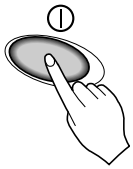

2 Open the door of the remote controller and press the 2nd Function button to operate functions printed blue color under buttons.
(Check the indication of 2nd function on the display of the remote controller.)

3 2nd function disappears in a short time automatically or when the button is pressed again.

For more details, refer to functions next pages.

Additional Features

Sleep mode

1. Press the Sleep Mode Auto button to set the time you want the unit to stop automatically.
2. The Timer is programmed in one-hour increments by pressing the Sleep Mode Auto button 1 to 7 times. The sleep mode is available for 1 to 7 times. To alter the time period in steps of 1 hour, press the Sleep Mode Button while aiming at air conditioner.
3. Make sure the Sleep Mode Auto LED lights up .
   To cancel the Sleep Mode, press the sleep Mode Auto button several times until the star(☆) disappears from the operation display.

NOTICE

The Sleep Mode will be operated at slow fan speed (cooling) or medium fan speed (heat pump only) for a comfortable sleep.

In cooling mode or healthy dehumidification mode:
The setting temperature will automatically rise by 1°C(2°F) over the next 30 minutes and by 2°C(4°F) in 1 hour for a comfortable sleep.

Setting the time

1. Time can be set only when you press the Reset button. When you replace the batteries, you should press the reset buttons to reset the time. Press the Start/Stop button.
2. Press 2nd F button and check if 2nd F icon is on.
3. Press the Time Setting buttons until the desired time is set.

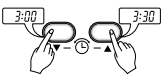

4. Press the Timer SET button.

NOTICE

Check the indicator for A.M. or P.M.

Delay start/Pre-set stop

1. Make sure the time is set correctly on the display of the remote controller.
2. Press 2nd F button.
3. Press the ON/OFF Timer buttons to turn Timer on or off.

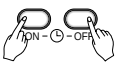

4. Press the Time Setting buttons until the desired time is set.

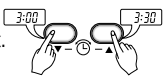

5. To set the selected time, press the Timer setting button aiming the remote controller at the signal receptor.

To cancel the timer setting
Check if 2nd F icon is off.
Press the Timer Cancel button aiming the remote controller at the signal receptor.
(The timer lamp on the air conditioner and the display will go out.)

NOTICE

Select one of the following four types of operation.

with the unit running

Delay OFF Timer | Delay ON Timer | Delay OFF and ON Timer | Delay ON and OFF Timer

Vertical Airflow Direction Control

The up/down airflow (Vertical Airflow) can be adjusted by using the remote control.

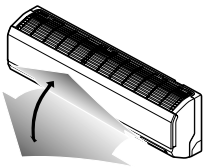

1. Press the Start/Stop button to start the unit.

2.Open the door on the remote control.
Press Chaos Swing button and the louvers will swing up and down. Press the Chaos Swing button again to set the vertical louver at the desired airflow direction.

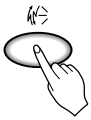

NOTICE

- ❑ If you press the CHAOS swing button, the vertical airflow direction is changed automatically based on the CHAOS algorithm to distribute the air in the room evenly and at the same time to make the human body feel most comfortable, as if enjoying a natural breeze.
- ❑ Always use the remote control to adjust the up/down airflow direction. Manually moving the vertical airflow direction louver by hand could damage the air conditioner.
- ❑ When the unit is shut off, the up/down airflow direction louver will close the air outlet vent of the system.

To adjust left/right(Horizontal Airflow) direction

⚠ WARNING

Ensure unit is turned off before adjusting the horizontal airflow direction control.
Carefully open vertical louver to allow access to the horizontal airflow direction.

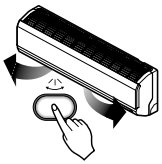

Adjust the left/right airflow direction by hand.

Air Circulation Mode

Circulates the room air without cooling or heating.

1. Press the Start/Stop button. the unit will respond with a beep.
2. Open the door on the remote control. Press the Air Circulation button. Close the door on the remote control. Now each time that you press the Indoor Fan Speed Selector, the fan speed is shifted from low to CHAOS and back to low again.

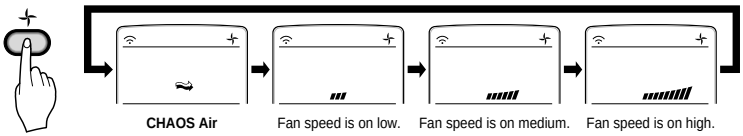

NOTICE

❑ **CHAOS Air** economizes power consumption and prevents overcooling. The fan speed is automatically changed from high to low or vice versa, depending on the ambient temperature.

Auto clean (Optional)

1. Whenever you press the AUTO CLEAN button, Auto Clean Function will be reserved and cancelled.
2. Auto Clean function works before and after cooling or dehumidification mode. For details, refer to the below points.
3. When the unit is started after the reservation of Auto Clean ,the Cool Start function operates and indoor Fan is started after 20 seconds.
4. When you press Start/Stop button to turn off the unit after the you have reserved Auto Clean function, the air-conditioner circulates the indoor air in the Auto Clean mode with no more Cooling or Dehumidification operation. It lasts for 30 minutes.
5. If you press the AUTO CLEAN button again during the product operation , Auto Clean function will be cancelled.

NOTICE

- ❏ During Auto Clean function, moistures left in indoor units after Cooling Operation or Healthy Dehumidification Operation can be removed.
- ❏ During Auto Clean function, only Start/Stop button, Plasma button and AUTO CLEAN button are available.

Forced operation

Operation procedures when the remote control can't be used.
The operation will be started if the ON/OFF button is pressed.
If you want to stop operation, re-press the button.

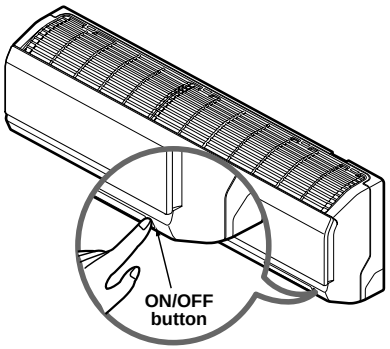

	Cooling Model	Heat pump Model		
		Room Temp. ≥ 24°C(75.2°F)	21°C(69.8°F) ≤ Room Temp. < 24°C(75.2°F)	Room Temp. < 21°C(69.8°F)
Operating mode	Cooling	Cooling	Healthy Dehumidification	Heating
Indoor FAN Speed	High	High	High	High
Setting Temperature	22°C(71.6°F)	22°C(71.6°F)	23°C(73.4°F)	24°C(75.2°F)

Test operation

During the TEST OPERATION, the unit operates in cooling mode at high speed fan, regardless of room temperature and resets in 18 minutes.
During test operation, if remote controller signal is received, the unit operates as remote controller sets.
If you want to use this operation, Press and hold the ON/OFF button for 3~5 seconds, then the buzzer sound 1 "beep".
If you want to stop the operation, re-press the button.

Auto restart

In case the power comes on again after a power failure, Auto Restarting Operation is the function to operate procedures automatically to the previous operating conditions.
So there is no need of activating this function by pressing any key or button.
In the initial mode, the fan operates at a low speed and the compressor starts 2.5~3 minutes later.
As the compressor starts, the fan speed also resumes its previous setting mode.

Helpful information

Fan speed and cooling capacity.
The cooling capacity indicated in the specification is the value when the fan speed is set to high, and the capacity will be lower at low or medium fan speed.
High fan speed is recommended when you wish to cool the room quickly.

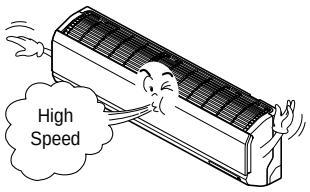

NOTICE

Auto restart function has set enable as factory default.
But customer can set up by following this instruction.

To disable function

- Press and hold the ON/OFF button for 6 seconds, then the buzzer sound 2 "beep" and the indicator lamp (1) blinks 4 times.

To enable function

- Press and hold the ON/OFF button for 6 seconds, then the buzzer sound 2 "beep" and the indicator lamp (1) brights 4 times.

Maintenance And Service

⚠ CAUTION

Before performing any maintenance, turn off the main power to the system.

Indoor Unit

Grille, Case, and Remote Control

Turn the system off before cleaning. To clean, wipe with a soft, dry cloth. Do not use bleach or abrasives.

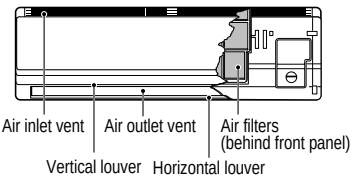

NOTICE

Supply power must be disconnected before cleaning the indoor unit.

Air filters

The air filters behind the front grille should be checked and cleaned once in every 2 weeks or more often if neccessary.

1. Open the front panel as shown.
2. Pull the filter tab slightly forward to remove the filter.
3. Clean the filter with a vacuum cleaner or warm, soapy water.
   - If dirt is conspicuous, wash with a solution of detergent in lukewarm water.
   - If hot water (40°C(104°F) or more) is used, it may be deformed.
4. After washing with water, dry well in the shade.
5. Re-install the air filter.

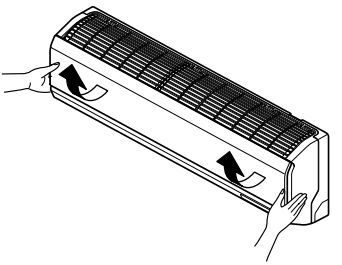

NEO PLASMA filter (Optional)

The NEO PLASMA filter behind the air filters should be checked and cleaned once in every 3 months or more often if necessary.

1. After removing the air filters, pull slightly forward to remove the NEO PLASMA filter.
2. Clean NEO PLASMA filter with the vacuum cleaner. If it is very dirty, wash it with water.
3. Note the cuts of electric discharge lines.
4. Re-install the NEO PLASMA filter to the original position.

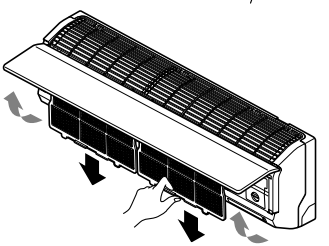

TRIPLE DEODORIZER filter (Optional)

1. After removing the air filters, pull slightly forward to remove the TRIPLE DEODORIZER filter.
2. Dry in the sunlight for two hours.
3. Re-install the TRIPLE DEODORIZER filter to the original position.

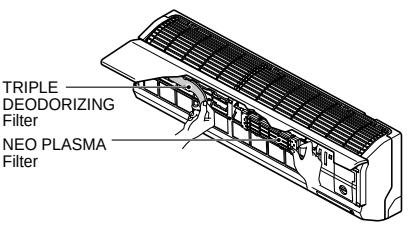

⚠ CAUTION

Don't touch this NEO PLASMA Filter within 10 seconds after opening he inlet grille, it may cause an electric shock.

Never use any of the followings:

- Water hotter than 40°C(104°F)
  Could cause deformation and/or discoloration.
- Volatile substances
  Could damage the surfaces of the air conditioner.

Outdoor Unit

The heat exchanger coils and panel vents of the outdoor unit should be checked regularly. If clogged with dirt or soot, the heat exchanger and panel vents may be professionally steam cleaned.

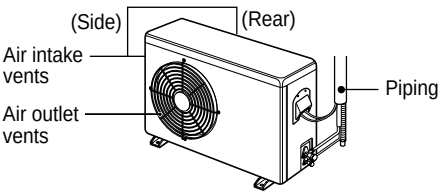

NOTICE

Dirty or clogged coils will reduce the operating efficiency of the system and cause higher operating costs.

Common Problems And Solutions

Before calling for service

If you have problems with your air conditioner, read the following information and try to solve the problem. If you cannot find a solution, turn off the air conditioner and contact your dealer.

Air conditioner does not operate

1. Ensure that the air conditioner is plugged into a proper outlet.
2. Check the fuse or circuit breaker.
3. Check whether the voltage is unusually high or low.

Air does not feel cold enough on the cooling setting

1. Ensure that the temperature settings are correct.
2. Check to see if the air filter is clogged with dust. If so, replace the filter.
3. Ensure that the air flow from the outside is not obstructed and that there is a clearance of over 20" between the back of the air conditioner and the wall or fence behind it.
4. Close all doors and windows and check for any source of heat in the room.

Before calling for service, please review the following list of common problems and solutions.

The air conditioner is operating normally when:

- You hear a pinging noise. This is caused by water being picked up by the fan on rainy days or in highly humid conditions. This feature is designed to help remove moisture in the air and improve cooling efficiency.
- You see water dripping from the rear of the unit. Water may be collected in the base pan in highly humid conditions or on rainy days. This water overflows and drips from the rear of the unit.
- You hear the fan running while the compressor is silent. This is a normal operational feature.

Troubleshooting

The air conditioner may be operating abnormally when:

Problem	Possible Causes	What To Do
Air conditioner does not start	■ The air conditioner is unplugged.	• Make sure the air conditioner plug is pushed completely into the outlet.
	■ The fuse is blown/circuit breaker is tripped.	• Check the house fuse/circuit breaker box and replace the fuse or reset the breaker.
	■ Power failure.	• If power failure occurs, turn the mode control to Off. When power is restored, wait 3 minutes to restart the air conditioner to prevent tripping of the compressor overload.
Air conditioner does not cool as it should	■ Airflow is restricted.	• Make sure there are no curtains, blinds, or furniture blocking the front of the air conditioner.
	■ The air filter is dirty.	• Clean the filter at least every 2 weeks. See the care and Maintenance section.
	■ The room may have been hot.	• When the air conditioner is first turned on, you need to allow time for the room to cool down.
	■ Cold air is escaping.	• Check for open furnace floor registers and cold air returns.
	■ Cooling coils have iced up.	• See Air Conditioner Freezing Up below.

* You can refer to the Energy Star program in detail at www.energystar.gov.

SPLIT SYSTEM HEAT PUMP AIR HANDLER

MANUFACTURER:	**TRANE**
MODEL #:	**TWE090A300E**
SIZE:	**60 HZ**

Installation
Operation
Maintenance

Split System Cooling or Heat Pump Air Handler 7½ - 20 Tons

Model TWE

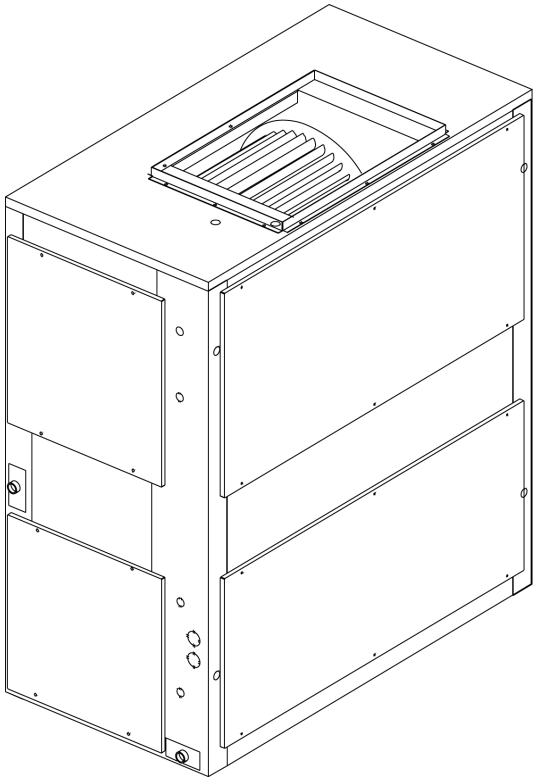

Models (60 Hz)
TWE060A***E
TWE060B***E
TWE090A***E
TWE090B***E
TWE120A***F
TWE120B***E
TWE180B***E
TWE240B***F

Models (50 Hz)
TWE050AD**E
TWE075AD**E
TWE100AD**E
TWE100BD**E
TWE155BD**E
TWE200BD**F

December 2007 **TWE-SVX03C-EN**

Introduction

Literature Change History

- TWE-SVX03A-EN (June 2003) Implemented Global Graphics format to IOM,
- TWE-SVX03B-EN (April 2005) Added capacitor discharge warning.
- TWE-SVX03C-EN (September 2006) Model number for 200 and 240 went to an "F".
- TWE-SVX03C-EN (December 2007) Updated with new copyright information.

Overview of Manual

Note: One copy of this document ships inside the control panel of each unit and is customer property. It must be retained by the unit's maintenance personnel.

This booklet describes proper installation, operation, and maintenance procedures for air cooled systems. By carefully reviewing the information within this manual and following the instructions, the risk of improper operation and/or component damage will be minimized.

It is important that periodic maintenance be performed to help assure trouble free operation. A maintenance schedule is provided at the end of this manual. Should equipment failure occur, contact a qualified service organization with qualified, experienced HVAC technicians to properly diagnose and repair this equipment.

NOTICE:
Warnings and Cautions appear at appropriate sections throughout this manual. Read these carefully.

⚠WARNING– Indicates a potentially hazardous situation which, if not avoided, could result in death or serious injury.

⚠CAUTION – Indicates a potentially hazardous situation which, if not avoided, may result in minor or moderate injury. It may also be used to alert against unsafe practices.

CAUTION – Indicates a situation that may result in equipment or property-damage-only accidents.

IMPORTANT NOTE: All phases of this installation must comply with the NATIONAL, STATE & LOCAL CODES. In addition to local codes, the installation must conform with National Electric Code -ANSI/NFPA NO. 70 LATEST REVISION.

IMPORTANT NOTE: Do Not release refrigerant to the atmosphere! If adding or removing refrigerant is required, the service technician must comply with all federal, state, and local laws.

⚠WARNING

Fiberglass Wool!

Product contains fiberglass wool. Disturbing the insulation in this product during installation, maintenance or repair will expose you to airborne particles of glass wool fibers and ceramic fibers known to the state of California to cause cancer through inhalation. Glass wool fibers may also cause respiratory, skin or eye irritation.

© 2007 Trane All rights reserved

Contents

Installation/Startup/Commissioning 4

Model Number Description 4

General Information 5

Dimensions/Weights 6

Installation Procedures 8

Field Wiring 13

Warranty Information 23

Model Number Description

Model Number Description
All products are identified by a multiple-character model number that precisely identifies a particular type of unit. An explanation of the alphanumeric identification code is provided below. Its use will enable the owner/operator, installing contractors, and service engineers to define the operation, specific components, and other options for any specific unit.

When ordering replacement parts or requesting service, be sure to refer to the specific model number, serial number, and DL number (if applicable) stamped on the unit nameplate.

Air Handler Model Nomenclature

T	W	E	0	9	0	A	1	0	0	E	A
1	2	3	4	5	6	7	8	9	10	11	12

Digits 1,2,3 - *Product Type*
TWE = Split System Heat Pump/ Cooling Air Handler

Digits 4,5,6 - *Nominal Gross Cooling Capacity (MBh)*
060 = 5 Tons
090 = 7 1/2 Tons
120 = 10 Tons
150 = 12 1/2 Tons
180 = 15 Tons
240 = 20 Tons

Digits 7 - *Refrigerant Circuit*
A = Single
B = Dual

Digits 8 - *Electrical Characteristics*
1 = 208-230/60/1
3 = 208-230/60/3
4 = 460/60/3
W = 575/60/3
D = 380-415/50/3
K = 380/60/3

Digits 9,10 - *Factory Installed Options*
00 = Packed Stock

Digits 11 - *Minor Design Sequence*
Current Design Sequence

Digits 12 - *Service Digit*
A = First

General Information

These instructions do not attempt to cover all variations in systems, nor to provide for every possible contingency to be met in connection with installation. Should further information be desired or should particular problems arise which are not sufficiently covered for the purchaser's purpose, the matter should be referred to the manufacturer.

General

This manual covers installation of the TWE050, 060, 075, 090,100 and 120A single circuit air handlers and TWE060, 075, 090, 100, 120, 155, 180, 200 and 240B dual circuit air handlers. These air handler models incorporate a single slab coil assembly, improved application flexibility, servicing, maintenance accessibility and an improved accessory line. They are fully convertible, (vertical to horizontal discharge) without field removal or reorientation of the coil assembly. They are shipped ready for horizontal installation. The TWE090A300C, TWE090B300C, TWE120A300D, TWE120B300D models are shipped from the factory wired for 208-230V/3ph/60 Hz, but may be field converted for 460V/3ph/60 Hz applications by changing voltage plug on the motor. For voltage change plug instructions, refer to Figure 8.

All units (both single and dual circuit), have one drain pan that can be installed in any one of four positions. This allows for vertical or horizontal applications and right or left exit.

Important note: The TWE060B, TWE090B, TWE100B, and TWE120B dual circuit air handlers have a split face coil. When they are installed in either position, the lower half of the coil is designated as "Circuit A" and should always wet first.

The TWE155B, TWE180B, TWE200B dual circuit units have a mixed face coil.

Note: The TWE050, 060, 075, 090, 100 and 120 air handlers have structural provisions to allow 180 degree rotation of discharge panel/blower assembly at installation. A reversible discharge wiring kit, BAYWRKT001A is available with instructions.

Inspection

Inspect material carefully for any shipping damage. If damaged, it must be reported to, and claims made against the transportation company. Replace damaged parts with authorized parts only. Check the unit nameplate to confirm that the proper unit was shipped. Available power supply must be compatible with electrical characteristics on component nameplate.

Unit Dimensions

Figure 1

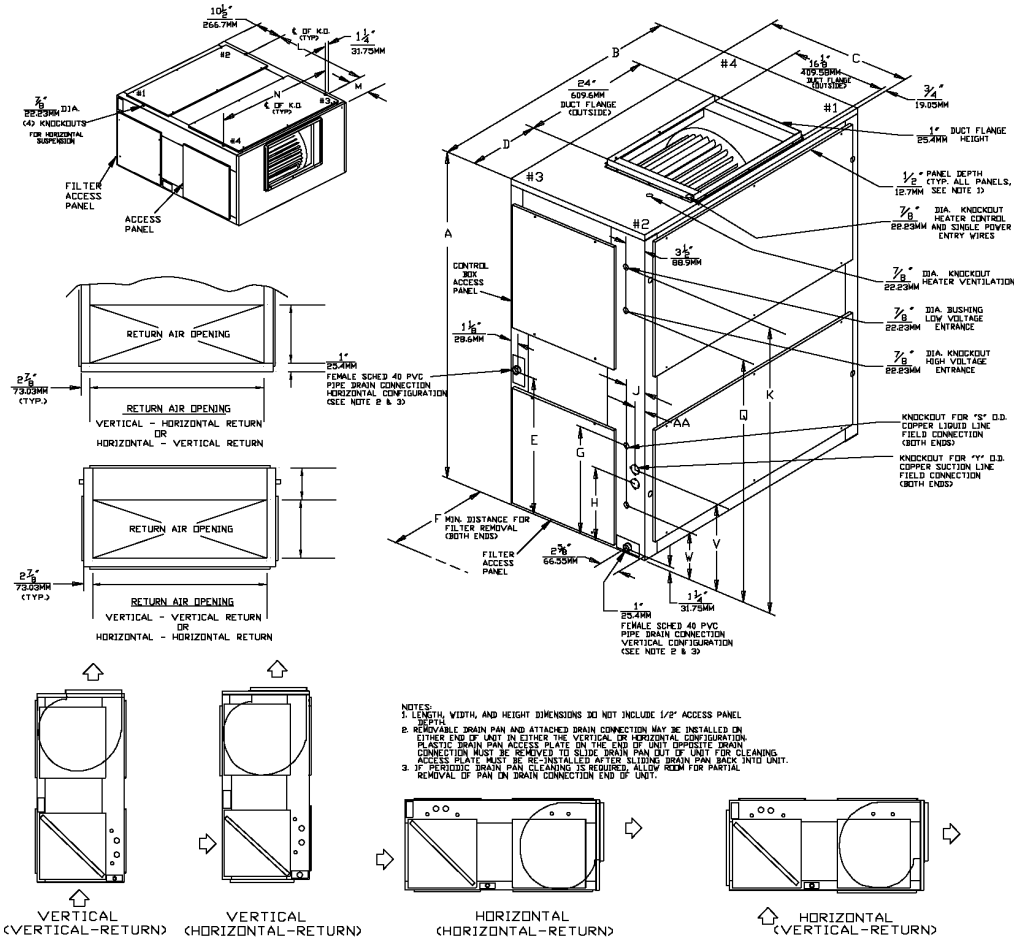

MODEL	A	B	C	D	E	F	G	H	J	K	L	M
TWE050 & 060A	48" 1219.2mm	38" 965.2mm	22" 558.8mm	8" 203.2mm	19 1/2" 495.3mm	26" 660.4mm	15 7/8" 403.2mm	14 1/8" 358.8mm	1 7/8" 47.63mm	42 1/8" 1070mm	34 5/8" 879.5mm	2 7/8" 73.03mm
TWE050 & 060B	48" 1219.2mm	38" 965.2mm	22" 558.8mm	8" 203.2mm	19 1/2" 495.3mm	26" 660.4mm	16 1/4" 412.8mm	13 1/4" 336.6mm	1 1/8" 28.58mm	42 1/8" 1070mm	34 5/8" 879.5mm	2 7/8" 73.03mm
TWE075 & 090A	54" 1371.6mm	47 1/2" 1206.5mm	25" 635mm	11 3/4" 298.5mm	22 3/8" 568.3mm	22" 558.8mm		17 3/4" 450.6mm	4" 101.9mm	45 1/4" 1149mm	36 7/8" 936.6mm	6 5/8" 168.3mm
TWE090B	54" 1371.6mm	47 1/2" 1206.5mm	25" 635mm	11 3/4" 298.5mm	22 3/8" 568.3mm	22" 558.8mm	20 9/16" 521.9mm	16" 407.6mm	2 1/8" 54.10mm	45 1/4" 1149mm	36 7/8" 936.6mm	6 5/8" 168.3mm
TWE100 & 120A	54" 1371.6mm	63 1/2" 1612.9mm	25" 635mm	19 3/4" 501.7mm	22 3/8" 568.3mm	22" 558.8mm		17 3/4" 450.6mm	4" 101.9mm	45 1/4" 1149mm	36 7/8" 936.6mm	6 5/8" 168.3mm
TWE100 & 120B	54" 1371.6mm	63 1/2" 1612.9mm	25" 635mm	19 3/4" 501.7mm	22 3/8" 568.3mm	22" 558.8mm	20 9/16" 521.9mm	16" 407.6mm	2 1/8" 54.10mm	45 1/4" 1149mm	36 7/8" 936.6mm	6 5/8" 168.3mm

MODEL	N	P	Q	R	S	T	V	W	X	Y	Z	AA
TWE050 & 060A	35 5/8" 904.9mm	12 1/4" 311.15mm	34 7/8" 885.8mm	32 1/4" 819.2mm	3/8" 9.525mm	12 1/2" 317.5mm			7 5/8" 193.7mm	1 1/8" 28.58mm	2" 50.8mm	1 7/8" 47.63mm
TWE050 & 060B	35 5/8" 904.9mm	12 1/4" 311.15mm	34 7/8" 885.8mm	32 1/4" 819.2mm	5/16" 7.938mm	12 1/2" 317.5mm	14 3/4" 374.7mm	11 1/8" 282.6mm	7 5/8" 193.7mm	3/4" 19.05mm	2" 50.8mm	2" 50.8mm
TWE075 & 090A	45 1/8" 1146.2mm	16 1/8" 409.6mm	38 1/8" 968.4mm	41 3/4" 1060mm	1/2" 12.7mm	16 1/4" 412.8mm		15" 382.2mm	6 7/8" 174.6mm	1 3/8" 34.93mm	1 3/4" 44.45mm	2" 51.05mm
TWE090B	45 1/8" 1146.2mm	16 1/8" 409.6mm	38 1/8" 968.4mm	41 3/4" 1060mm	3/8" 9.525mm	16 1/4" 412.8mm	18 3/4" 477.5mm	14" 356.8mm	6 7/8" 174.6mm	1 1/8" 28.58mm	1 3/4" 44.45mm	2 1/8" 54.10mm
TWE100 & 120A	61 1/8" 1552.6mm	16 1/8" 409.6mm	38 1/8" 968.4mm	57 3/4" 1467mm	1/2" 12.7mm	16 1/4" 412.8mm		15" 382.2mm	6 7/8" 174.6mm	1 3/8" 34.93mm	1 3/4" 44.45mm	2" 51.05mm
TWE100 & 120B	61 1/8" 1552.6mm	16 1/8" 409.6mm	38 1/8" 968.4mm	57 3/4" 1467mm	3/8" 9.525mm	16 1/4" 412.8mm	18 3/4" 477.5mm	14" 356.8mm	6 7/8" 174.6mm	1 1/8" 28.58mm	1 3/4" 44.45mm	2 1/8" 54.10mm

PRINTED FROM D669508

Unit Dimensions

Figure 2

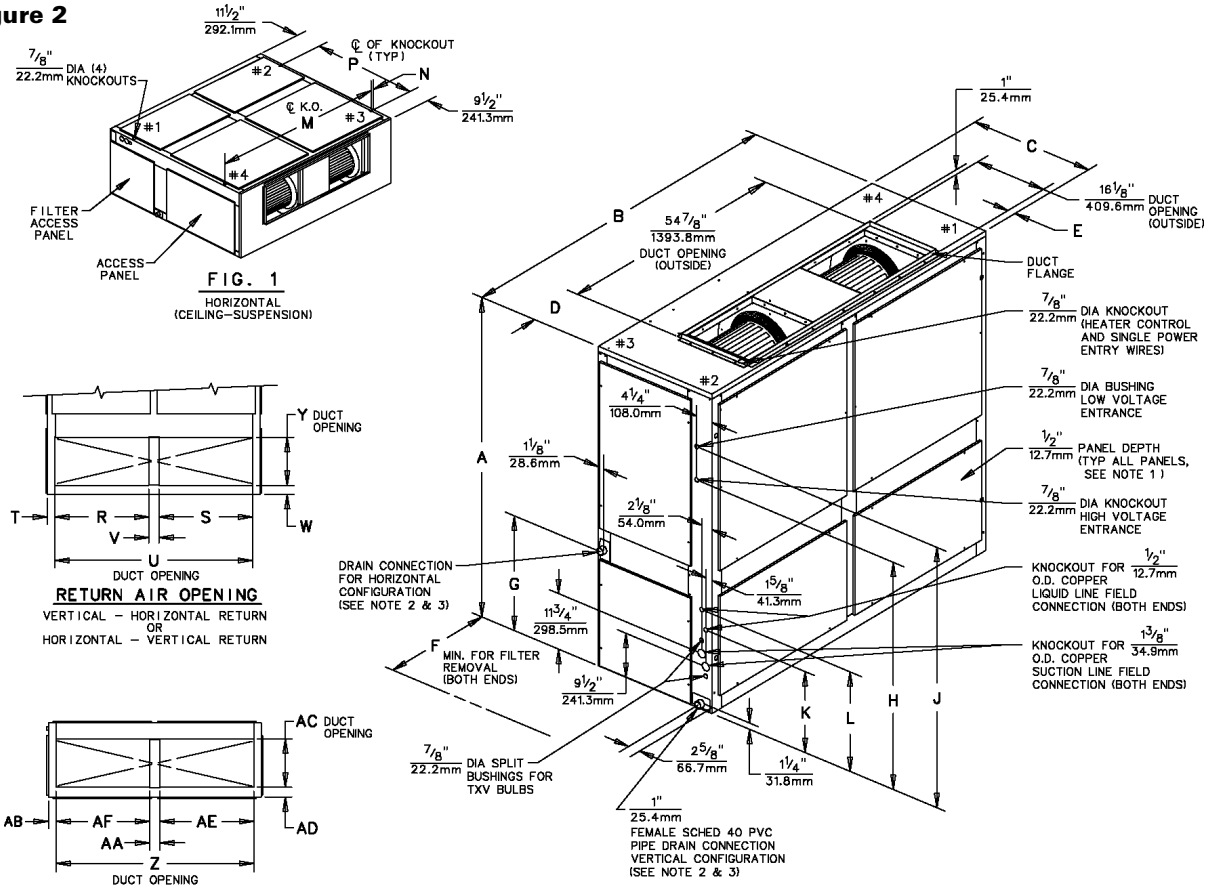

NOTES:

1. LENGTH, WIDTH, AND HEIGHT DIMENSIONS DO NOT INCLUDE 1/2" ACCESS PANEL DEPTH.
2. REMOVABLE DRAIN PAN AND ATTACHED DRAIN CONNECTION MAY BE INSTALLED ON EITHER END OF UNIT IN EITHER THE VERTICAL OR HORIZONTAL CONFIGURATION. PLASTIC DRAIN PAN ACCESS PLATE ON THE END OF UNIT OPPOSITE DRAIN CONNECTION MUST BE REMOVED TO SLIDE DRAIN PAN OUT OF UNIT FOR CLEANING. ACCESS PLATE MUST BE RE-INSTALLED AFTER SLIDING DRAIN PAN BACK INTO UNIT.
3. IF PERIODIC DRAIN PAN CLEANING IS REQUIRED, ALLOW ROOM FOR PARTIAL REMOVAL OF PAN ON DRAIN CONNECTION END OF UNIT.

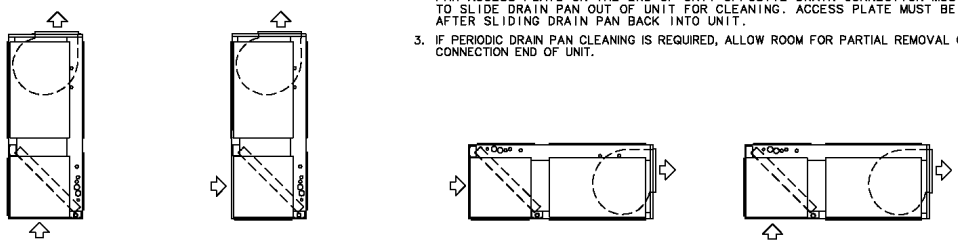

VERTICAL (VERTICAL RETURN) | VERTICAL (HORIZONTAL RETURN) | HORIZONTAL (HORIZONTAL RETURN) | HORIZONTAL (VERTICAL RETURN)

MODEL	A	B	C	D	E	F	G	H	J	K	L	M	N	P	R
TWE155 & 180B	69" 1752.6mm	79½" 2019.3mm	27⅝" 701.7mm	12⅜" 314.3mm	1⅝" 41.3mm	26" 660.4mm	25⅛" 638.2mm	49⅛" 1247.8mm	56¼" 1428.8mm	15½" 393.7mm	19½" 495.3mm	77¼" 1962.2mm	1¼" 31.8mm	48" 1219.2mm	35" 889.0mm
TWE200 & 240B	71⅞" 1825.6mm	92½" 2349.5mm	30½" 774.7mm	18⅞" 479.4mm	4½" 114.3mm	31" 787.4mm	28" 711.2mm	51⅞" 1317.6mm	59⅛" 1501.8mm	18⅛" 460.4mm	20⅞" 530.2mm	89¼" 2267.0mm	1¾" 44.5mm	50⅞" 1292.2mm	39⅛" 993.8mm

MODEL	S	T	U	V	W	Y	Z	AA	AB	AC	AD	AE	AF
TWE155 & 180B	35" 889.0mm	2⅞" 73.0mm	73⅞" 1876.4mm	3¾" 95.3mm	3⅜" 85.7mm	18" 457.2mm	73⅞" 1876.4mm	3¾" 95.3mm	2⅞" 73.0mm	18" 457.2mm	3⅝" 92.1mm	35" 889.0mm	35" 889.0mm
TWE200 & 240B	39⅛" 993.8mm	4⅞" 123.8mm	82⅞" 2105.0mm	4⅝" 117.5mm	3⅛" 79.4mm	20⅛" 511.2mm	82⅞" 2105.0mm	4⅝" 117.5mm	4⅞" 123.8mm	20⅛" 511.2mm	3" 76.2mm	39⅛" 993.8mm	39⅛" 993.8mm

PRINTED FROM D666371 REV. 1

Installation

Installation Preparations

The final position for the air handler must be dictated by required service access to it, weight distribution over structural supports, and by the locations of electrical, refrigerant and condensate drainage connections. After this is determined, the following preparations should be made.

Repositioning Drain Pan

These air handlers come with one drain pan that can be installed in any one of four positions; this allows for vertical or horizontal application and right or left condensate line connection. The drain pan can also be easily removed for periodic cleaning.

Important: All air handlers are shipped with the drain pan installed in the horizontal position and the connection on the left side (as shown in Figure 3). If an alternate position is required, the drain pan should be repositioned before setting the air handler.

Figure 3

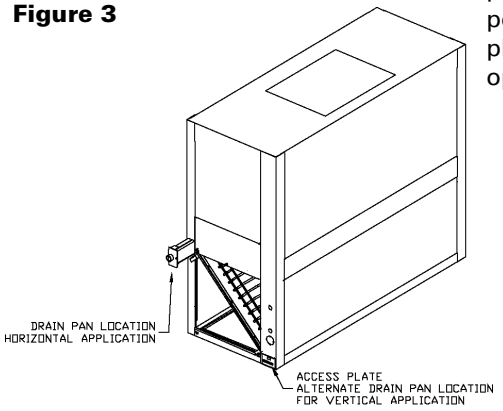

Process for Drain Pan Relocation

1 Remove the access plate at the opposite end of the drain connection. This plate secures and lifts the back end of the drain pan for sloping. It must be removed before the drain pan can be removed. This is done as follows: (A) remove the screw, (B) lift the access plate up, (C) pull the plate out. If the drain pan is to be moved to the vertical position also remove the other two access plates.

2 (a) Remove the screw securing the drain pan. (b) Lift the pan up. (c) Slide the pan out.

3 Install the drain pan into the new position. (a) Slide the drain pan into the opening. (b) Lift the drain pan up. (c) Push it in all the way. (d) Drop it down over the lip of the opening. Secure with screw.

4 Install the access plate on the opposite end of the drain pain. (a) Slide the edge of the access plate under the drain pan. (b) Lift the access plate and drain pan up. (c) Push the access plate in. (d) Drop the access plate down over the lip of the opening. Secure with screw. If the drain pan is being moved to the vertical position, install the other access plates over the horizontal position opening.

Figure 4

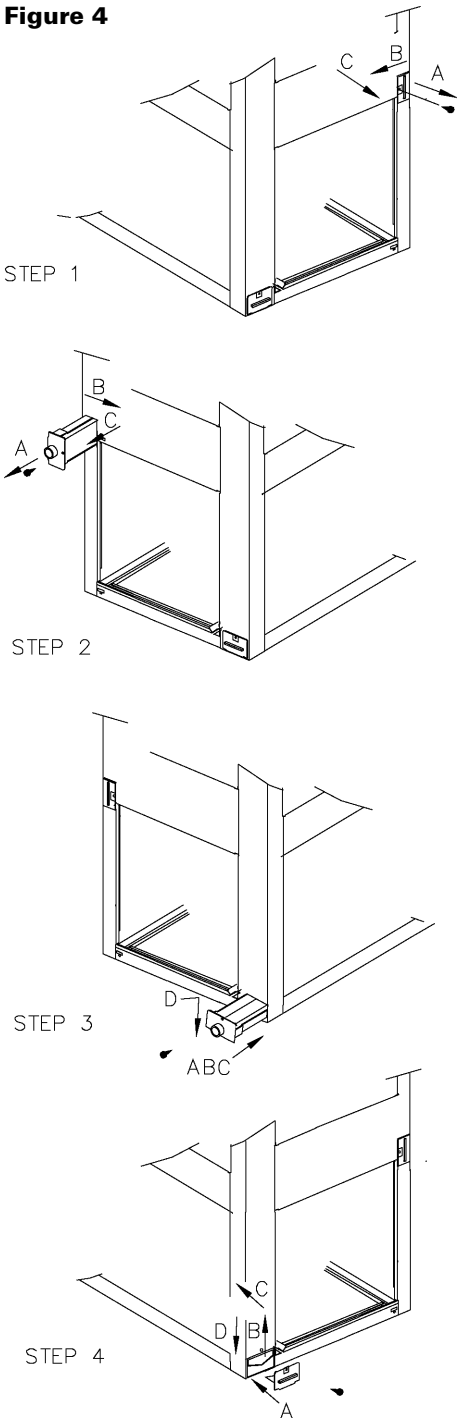

Installation

Refrigerant Piping Preparation
The air handler is designed so that refrigerant piping can enter from either the right or left hand side. It is shipped with the intent that the refrigerant lines will enter from the left hand side. To convert to right hand entry, unbraze the elbow on the suction line and rotate 180 degrees and rebraze.

Important: Access to refrigerant lines is limited in all horizontal and some vertical applications. Therefore, refrigerant lines should be stubbed out and temporarily capped prior to setting the air handler. Protect adjacent surfaces from heat damage when brazing in and around the air handler.

Caution

These air handlers are shipped with a dry nitrogen holding charge in the coil. Cut the process tube or puncture the cap to bleed off the nitrogen prior to any brazing. Temporarily cap off tubes if the refrigerant line connections are to be made later.

Installations, Limitations and Recommendations
The general location of the air handler is normally selected by the architect, contractor and/or buyer. For proper installation the following items must be considered.

a Available power supply must agree with electrical data on component nameplate.

b Air Handlers shipped wired for 208-230 volt applications can be converted for 460 volt by rewiring the blower motor (See Figure 8).

c If external accessories are installed on the unit, additional clearances must be provided.

d All duct work should be properly insulated to prevent condensation and heat loss.

e Refrigerant gas piping must be insulated.

Caution

Properly insulate all refrigerant gas piping to prevent possible water damage due to condensation and to prevent capacity loss and possible compressor damage.

It is recommended that the outline drawings (pages 3 and 4) be studied and dimensions properly noted and checked against the selected installation site. By noting in advance which knockouts are to be used, proper clearance allowances can be made for installation and possible future service.

Important: When installing these units "free standing" with discharge grills and isolators, a top support with isolator should be added to prevent tipping. Support and isolator can be attached to a wall or other appropriate structure.

Important: If adding external accessories to the unit, additional clearances must be considered for the overall space needed.

For installation of accessories available for this air handler, follow the instructions packed with each accessory.

Lifting Recommendations

⚠ WARNING

Improper Unit Lift!

Test lift unit approximately 24 inches to verify proper center of gravity lift point. To avoid dropping of unit, reposition lifting point if unit is not level. Failure to properly lift unit could result in death or serious injury or possible equipment or property-only damage.

Before preparing the unit for lifting, the center of gravity should be determined for lifting safety. Because of the placement of external components, the unit weight may be unevenly distributed. Approximate total unit weight and corner weights are given in Table 1.

Table 1

Model	Config.	Shipping Max.	Net Max.	Corner Weights			
				#1	#2	#3	#4
TWE060A&B	Vertical	262	232	58	58	58	58
TWE050A&B	Horiz.	262	232	54	59	63	56
TWE090A&B	Vertical	365	317	79	79	79	79
TWE075A&B	Horiz.	365	317	72	80	88	77
TWE120A&B	Vertical	439	392	98	98	98	98
TWE100A&B	Horiz.	439	392	95	101	101	95
TWE180A&B	Vertical	754	692	173	173	173	173
TWE155A&B	Horiz.	754	692	156	174	190	170
TWE240A&B	Vertical	886	816	204	204	204	204
TWE200A&B	Horiz.	886	816	179	221	228	185

The crated unit can be moved using a forklift of suitable capacity. For lifting the unit into an elevated mounting position, run lifting straps or slings under the unit and attach securely to the lifting device. Use spreader bars to protect the unit casing from damage. Test lift the unit to determine proper balance and stability.

Caution

Use spreader bars to prevent straps from damaging the unit. Install the bars between lifting straps, both underneath the unit and above the unit. This will prevent the straps from crushing the unit cabinet or damaging the unit finish.

Installation

Horizontal Suspension
If the air handler will be suspended, use a suspension mounting kit to isolate the unit from the structure. This is usually accomplished through the use of spring or rubber isolators, which are offered as an accessory. Mounting rods must be field supplied. Isolator selection is dependent upon total unit weight including accessories. Approximate unit weights are provided in Table 1.

Caution

Before hanging the unit on suspension rods, reinforce the cabinet around the knockouts by using a large washer inside the cabinet. Washers should be between the skin of the air handler and the nut on the suspension rod.

Align holes (knockouts) in the cabinet with structural supports and secure suspension rods to the structure, then to the air handler cabinet. If knockout locations do not permit proper alignment with existing structure, it may be necessary to field fabricate cross members on existing structural beams.

Note: When other than bottom return is to be used, side panel removed for return duct installation must be secured over the bottom opening.

Leveling
This air handler has a double sloped drain pan. In order to assure proper drainage along the length of the drain pan, it is important to have the unit properly leveled. Be sure the air handler is level or slightly sloped in the direction of the condensate connection.

Auxiliary Drain Pan
A *field fabricated, auxiliary drain pan* should be installed under the unit for all horizontal applications and when air handlers are installed above ceilings or in other locations where condensate overflow may cause damage. This drain pan will eliminate any excess condensation that may be due to extreme humidity or an obstructed drain in the primary drain pan. Drain lines from this pan must be installed, but should not be connected to the primary drain line from the unit. Isolate the auxiliary drain pan from both the air handler and the structure.

⚠ WARNING
Fiberglass Wool!

Product contains fiberglass wool. Disturbing the insulation in this product during installation, maintenance or repair will expose you to airborne particles of glass wool fibers and ceramic fibers known to the state of California to cause cancer through inhalation. Glass wool fibers may also cause respiratory, skin or eye irritation.

Precautionary Measures
- Avoid breathing fiberglass dust.
- Use a NIOSH approved dust/mist respirator.
- Avoid contact with the skin or eyes. Wear long-sleeved, loose-fitting clothing, gloves, and eye protection.
- Wash clothes separately from other clothing: rinse washer thoroughly.
- Operations such as sawing, blowing, tear-out, and spraying may generate fiber concentrations requiring additional respiratory protection. Use the appropriate NIOSH approved respirator in these situations.

First Aid Measures
Eye Contact - Flush eyes with water to remove dust. If symptoms persist, seek medical attention.

Skin Contact - Wash affected areas gently with soap and warm water after handling.

Refrigerant Piping
Installation, brazing, leak testing and evacuation of refrigerant lines are covered in this the installation instructions packaged with the outdoor unit. Read the instructions before beginning installation of refrigerant lines.

Locate cloth bag(s) attached to the refrigerant tube of the coil that contains two (2) brass clamps (straps) and cork impregnated insulation material approximately 9" long by 4" wide. This is for attaching and insulating the expansion valve bulb (s) to the suction line(s).

On air handlers that will have refrigerant lines entering the cabinet from the left side, remove the split rubber grommet from the knockout in the end of the air handler. Uncoil the cap tub with the bulb attached at the expansion valve and place the grommet on the cap tube. With the grommet around the tube, push the bulb through the hole and position the grommet back into it's original position (one bulb and cap tube on single circuit units and two bulbs and cap tubes on dual circuit units).

Attach the bulb(s) approximately 45 degrees off vertical, 10 to 12 inches outside of the air handler.

On air handlers that will have refrigerant lines entering the cabinet from the right side, the bulb(s) should be attached to the suction tube(s) inside the cabinet in the same manner as above, approximately 10" from the right end of the unit.

After attaching to the suction line(s), either inside or outside of the cabinet, wrap the cork impregnated insulation around the bulb(s) and suction tube(s). Refrigerant piping should be insulated.

Important: Ensure that the refrigerant lines passing through the cabinet are not resting on sharp sheet metal edges.

Installation

Condensate Piping

The drain pan condensate connection is a female slip joint type for 1" Schedule 40 PVC pipe. Use PVC cement and tubing as required (field supplied) to construct a trap. A union or flexible tubing and clamps may be installed if the drain pan is to be removed periodically for cleaning.

Important: When air handler is installed in the vertical position and close proximity trapping of condensate is required, use of a subbase accessory to raise the air handler for clearance of the drain trap is recommended. See Figure 5 for a typical drain trap assembly.

Figure 5

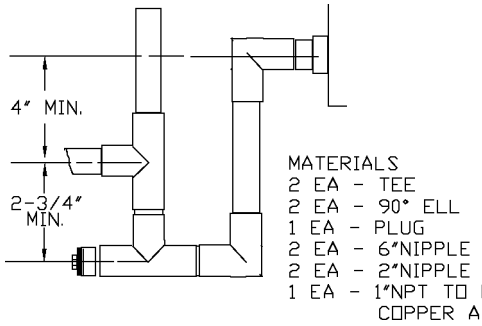

Filters

Air handlers are shipped with throw-away filters installed. For replacement filters consult the air handler service facts for correct size and number. To replace filters from the end of the unit, remove lower access panel (either end) and slide old filters out and replace with new ones. To replace from the front of the unit, remove one "L" shaped angle. Remove and replace filters and reinstall "L" shaped angle. See Figure 6.

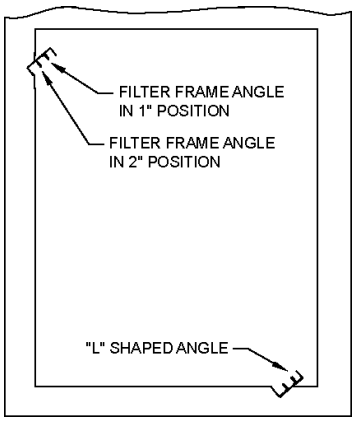

Figure 6

To convert from 1" filter to a 2" filter on units so equipped, remove lower access panels from both ends of the air handler. Remove screws and reposition the "L" shaped angles from both the top and bottom of the filter track to increase the width of the filter opening.

Duct Connections

The supply and return ducts should be connected to the unit with flame retardant duct connectors to reduce vibration transmission. The return duct should be sized to the same dimensions as the return inlet of the unit.

Important: Duct flanges are provided for attachment of the duct work. On TWE060, 090, and 120 the flanges are not installed but are shipped inside the air handler. While facing the air handler with the control box to your left, remove the upper access panel. The duct flanges will be attached to the belly band of the air handler nearest you. Remove the screws securing flanges in place. Position the four flanges around the supply opening. Secure with field supplied screws, using the predrilled holes. On TWE180 and 240, the duct flanges are packaged on the outside of the cabinet.

Air Flow Settings

Unit is shipped for nominal airflow with nominal static pressure. Please refer to fan performance table in either the product catalog or unit service facts and select the proper drive package for each application. Failure to do so could result in improper airflow causing coil frosting or condensate management problems. Condensate management problems such as water drip off or water blow off could be the result of too great of air face velocity across the coil.

Installation

⚠ WARNING
Hazardous Voltage w/Capacitors!

Disconnect all electric power, including remote disconnects and discharge all motor start/run capacitors before servicing. Follow proper lockout/tagout procedures to ensure the power cannot be inadvertently energized. Verify with an appropriate voltmeter that all capacitors have discharged. Failure to disconnect power and discharge capacitors before servicing could result in death or serious injury.

Note: For additional information regarding the safe discharge of capacitors, see PROD-SVB06A-EN or PROD-SVB06A-FR.

Electrical Connections

1 All electrical lines, sizing, protection, and grounding must be in accordance with the National Electric Code and local codes.

2 If conduit is used, isolate whenever vibration transmission may cause a noise problem within the building structure.

3 Ensure all connections are tight and no wires exposed.

4 All accessories must be installed and wired according to the instructions packaged with that accessory.

For air handler power entry only, or for dual power entry (power entry for air handler and power entry for electric heats), the electrical connections are made in the fan control box located in the left side of the air handler and electric heater respectively. Wiring entrance is through holes provided in the end of the air handler cabinet, see Figure 7. Breaker or fuse size can be selected using the nameplates attached to the unit and electric heater. See pages 13 through 22 for typical interconnecting wiring diagrams.

Table 2: Recommended t'stat wire size

Wire Size (Gauge)	Maximum Wire Length Physical distance between Unit & T'stat
22	30 Feet
20	50 Feet
18	75 Feet
16	125 Feet
14	200 Feet

Figure 7

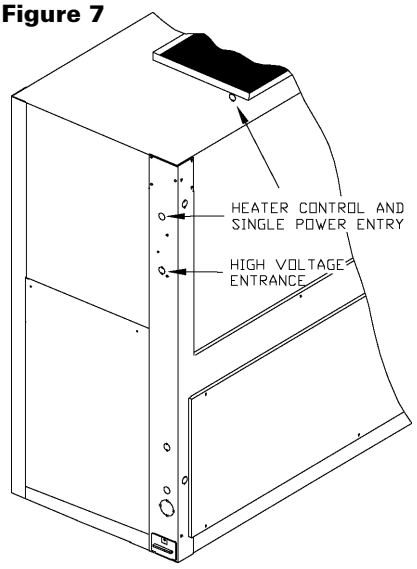

Checkout Procedure

Complete the following "installation checklist" once installation of field wiring connections is complete. All operational checks (unit running) must be made after the outdoor unit is installed and system interconnection is complete.

Installation Checklist

Complete this checklist once the unit is installed to verify that all recommended procedures have been accomplished before the system is started. Operational checks cannot be performed until the outdoor unit is installed and system interconnection is complete.

- Verify that the unit electrical power is disconnected.
- Inspect all field wiring connections. All connections should be clean and tight.
- Inspect unit ground connection(s). Ground must comply with all applicable codes.
- Inspect unit suspension arrangement (if used). Unit position must be secure. Remove any tools or debris found in or near the unit.
- Inspect duct outlets. Outlets must be open and unrestricted.
- Inspect unit drain lines. Pipe connections must be tight and drain line unrestricted.
- Inspect fan assembly to insure all moving parts move freely.
- If unit is horizontally mounted, make sure secondary drain pan has been installed.
- Inspect unit for proper filters, securely installed. All cabinet panels must be secure.
- Instruct owner/operator on proper system operating and maintenance procedure.

Figure 8

VIEW OF TERMINAL END

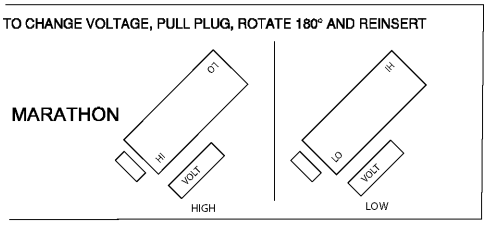

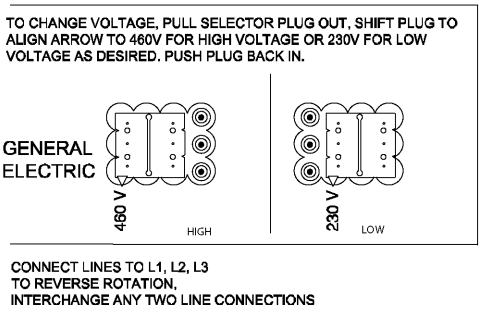

Field Wiring

Thermostat and Control Connections

1 Observe all notes on the diagrams.

2 Mount the thermostat in the desired location.

3 Install color coded low voltage cables between outdoor unit, indoor unit and thermostat.

4 Connect low voltage control wiring to the low voltage terminal board located on the side of the fan control box per the typical interconnecting wiring diagrams on pages 12 through 22.

TTA090A/TWE090A
TTA120A/TWE120A
Field Wiring:
A — 3 power wires. Line voltage.
B — 3 power wires. Line voltage for 3 phase; 2 wires for single phase.
C — Cooling only thermostat: 3 wires, 24 volts.
— One Stage Electric heat: add 1 additional wire, 24 volts.
— Two Stage Electric heat: add 2 additional wires, 24 volts.
D — 4 wires, 24 volts.

TWA090A/TWE090A
TWA120A/TWE120A
Field Wiring:
A — 3 power wires. Line voltage.
B — 3 power wires. Line voltage for 3 phase; 2 wires for single phase.
C — Heat pump thermostat: 6 wires, 24 volts.
— Electric heat: add 2 additional wire, 24 volts.
D — 6 wires, 24 volts.
— Outdoor thermostat; add 1 additional wire, 24 volts.
— Electric heat: add 1 additional wires, 24 volts.

TTA120B/TTE120B
TTA120C/TWE120C
TTA120B/TWE120B
Field Wiring:
A — 3 power wires. Line voltage.
B — 3 power wires. Line voltage for 3 phase; 2 wires for single phase.
C — Cooling only thermostat: 4 wires, 24 volts.
— One Stage Electric heat: add 1 additional wire, 24 volts.
— Two Stage Electric heat: add 2 additional wires, 24 volts.
D — 5 wires, 24 volts.

Figure 9: Field Wiring

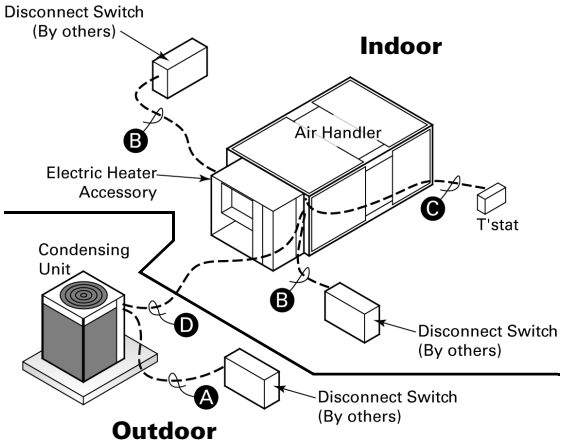

Notes:
1. Wiring shown with dashed lines is to be furnished and installed by the customer. All customer-supplied wiring must be copper only and must conform to NEC and local electrical codes. Codes may require line of sight between the disconnect switch and the unit.

2. When electric heater accessory is used, single point power entry or dual point power entry is field optional. Single point power entry option is through the electric heater only.

TT_060/TWE060A
Field Wiring:
A — 3 power wires. Line voltage.
B — 3 power wires. Line voltage for 3 phase; 2 wires for single phase.
C — Cooling only thermostat: 3 wires, 24 volts.
— One Stage Electric heat: add 1 additional wire, 24 volts.
— Two Stage Electric heat: add 2 additional wires, 24 volts.
D — 2 wires, 24 volts.

TW_060A/TWE060A
Field Wiring:
A — 3 power wires. Line voltage for 3 phase; 2 wires for single phase.
B — 3 power wires. Line voltage for 3 phase; 2 wires for single phase.
C — Heat pump thermostat: 6 wires, 24 volts.
— Electric heat: add 2 additional wire, 24 volts.
D — 2 wires, 24 volts.
— Outdoor thermostat; add 1 additional wire, 24 volts.
— Electric heat: add 1 additional wires, 24 volts.

(2) TT_060/TTE120B
(2) TT_060/TWE120B
(2) TT_030/TWE060B
Field Wiring:
A — 3 power wires. Line voltage for 3 phase; 2 wires for single phase.
B — 3 power wires. Line voltage for 3 phase; 2 wires for single phase.
C — Cooling only thermostat: 4 wires, 24 volts.
— One Stage Electric heat: add 1 additional wire, 24 volts.
— Two Stage Electric heat: add 2 additional wires, 24 volts.
D — 2 wires, 24 volts to outdoor section A.
— 2 wires, 24 volts to outdoor section B.

(2) TW_030/TWE060B
(2) TW_060/TWE120B
Field Wiring:
A — 3 power wires. Line voltage for 3 phase; 2 wires for single phase.
B — 3 power wires. Line voltage for 3 phase; 2 wires for single phase.
C — Heat pump thermostat: 7 wires, 24 volts.
— Electric heat: add 2 additional wire, 24 volts.
D — 5 wires, 24 volts to outdoor section A.
— 2 wires, 24 volts to outdoor section B.
— 2 wires, 24 volts between outdoor sections A and B.
— Outdoor thermostat; add 1 additional wire, 24 volts.
— Electric heat: add 1 additional wires, 24 volts.

Field Wiring

Figure 10:
TTA090A,120A/TWE090A,120A
TTA075A,100A/TWE075A,100A

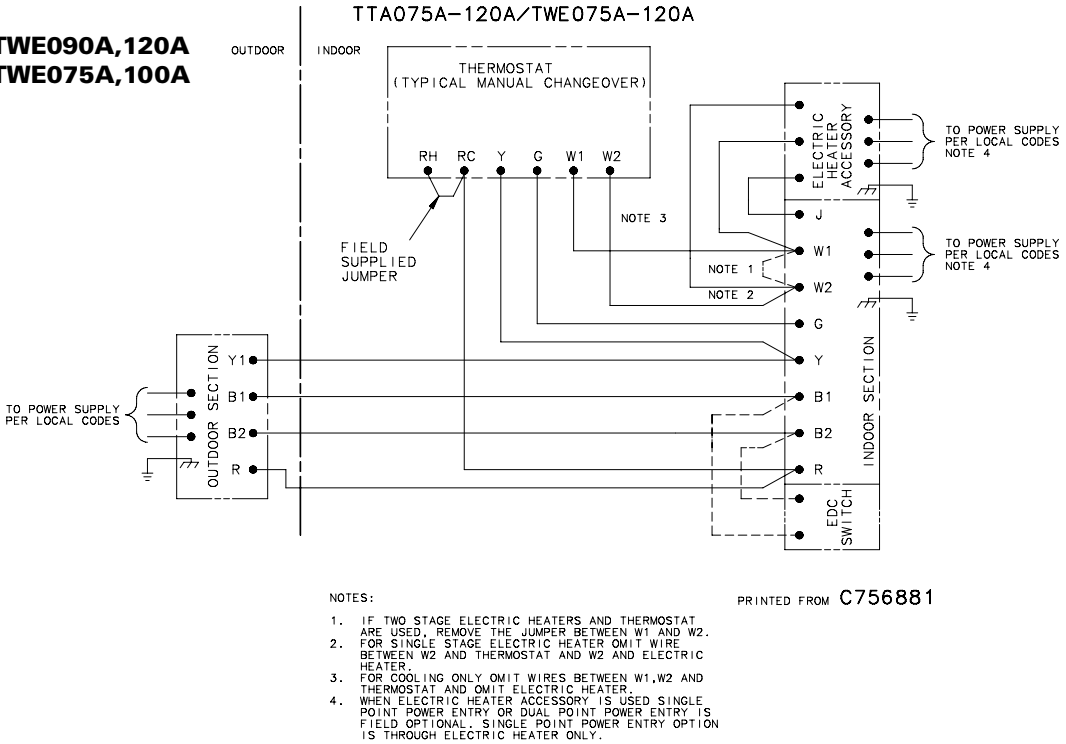

Figure 11:
TTA120B/TWE120B
TTA120C/TWE120A
TTA100B/TWE100B
TTA100C/TWE100A

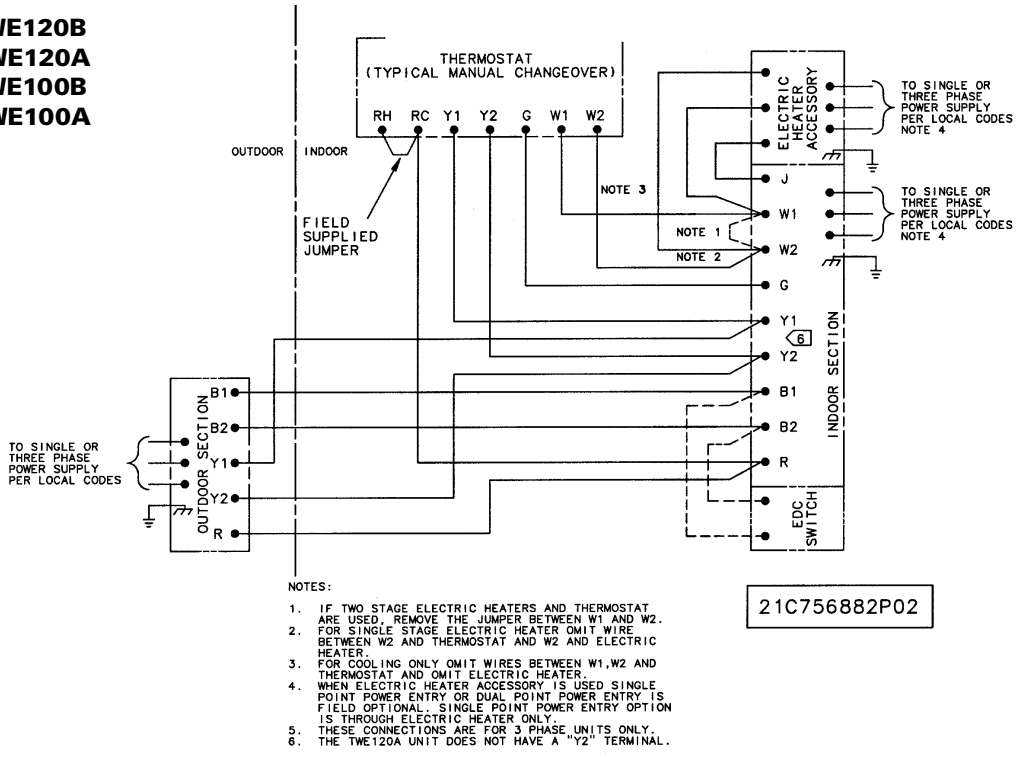

Field Wiring

Figure 12:
TWA090A,120A/TWE090A,120A
TWA075A,100A/TWE075A,100A

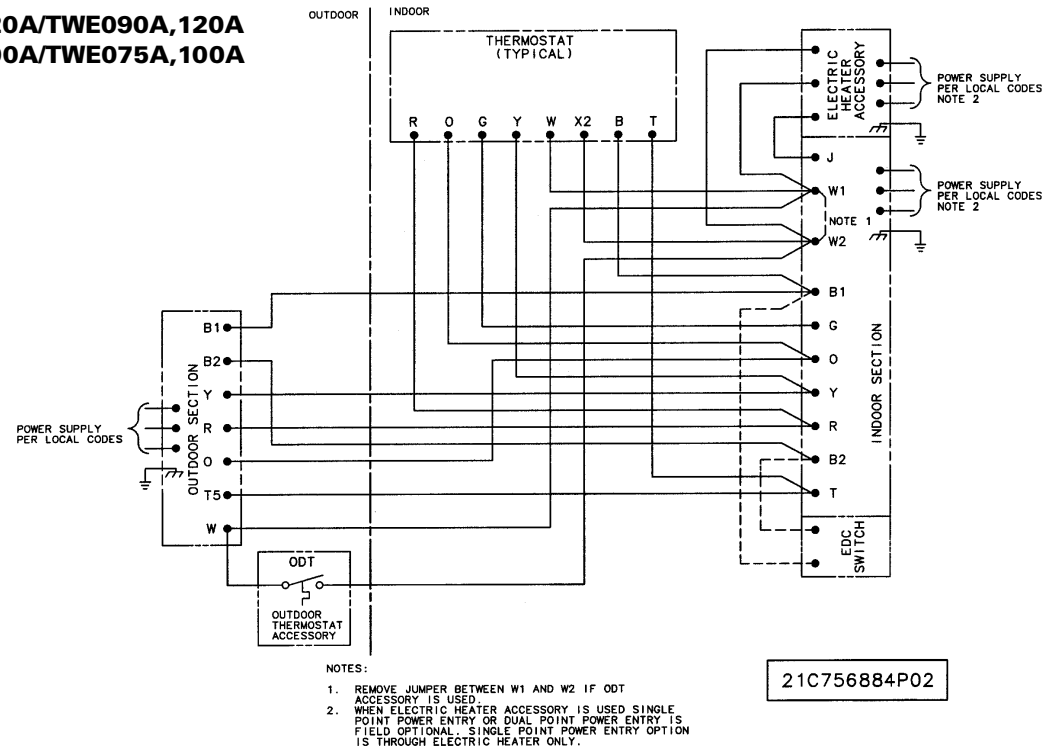

Figure 13:
TTA120B/TWE120B
TTA120C/TWE120A
TTA100B/TWE100B
TTA100C/TWE100A

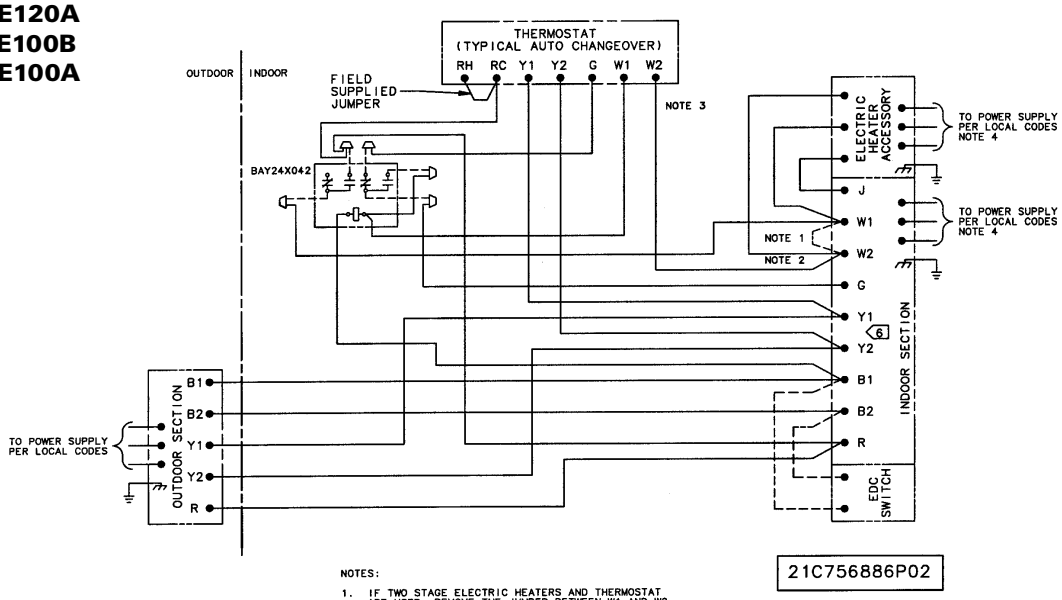

Field Wiring

Figure 14:
TTA090A,120A/TWE090A,120A
TTA075A,100A/TWE075A,100A

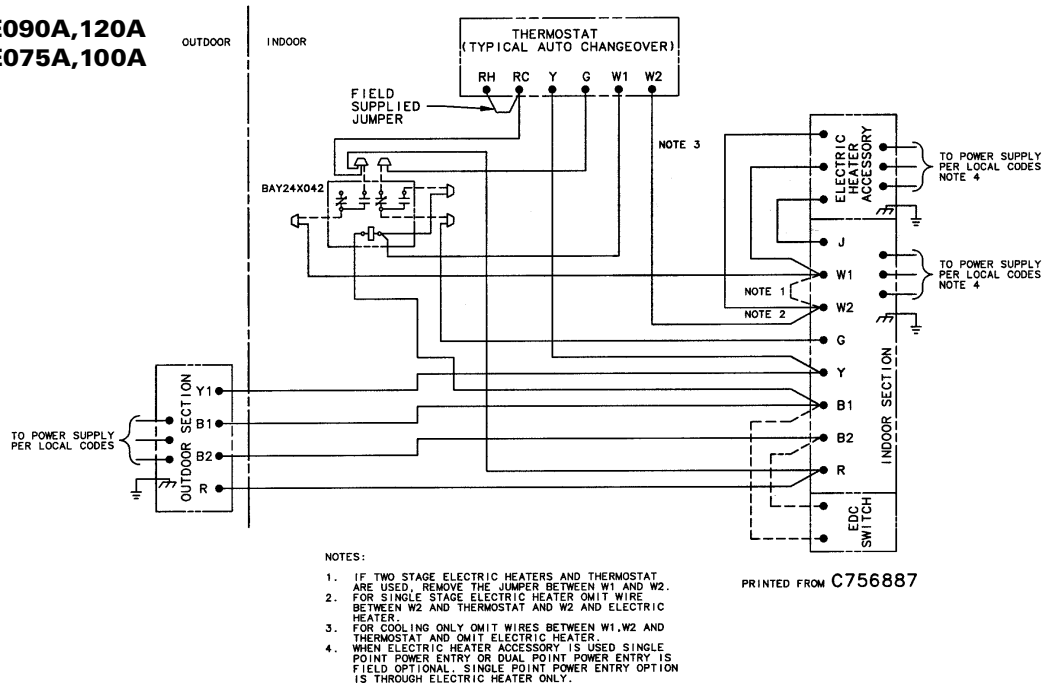

Figure 15:
TT_060/TWE060
TT_050/TWE050

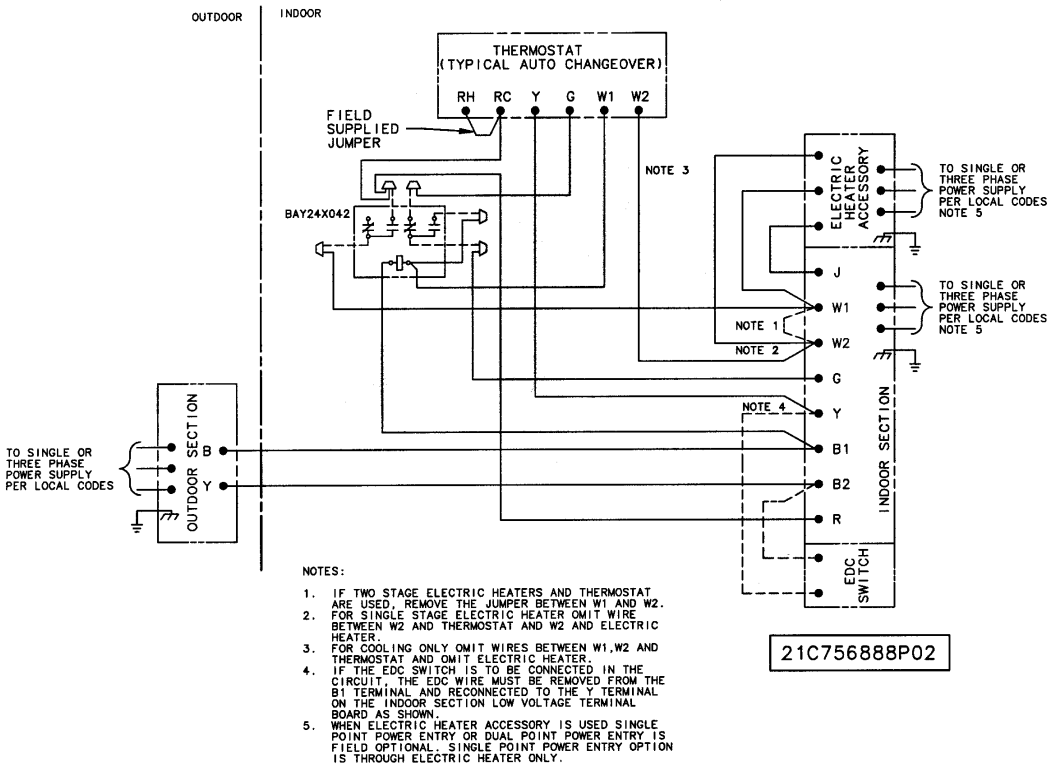

Field Wiring

Figure 16:
TT_060/TWE060
TT_050/TWE050

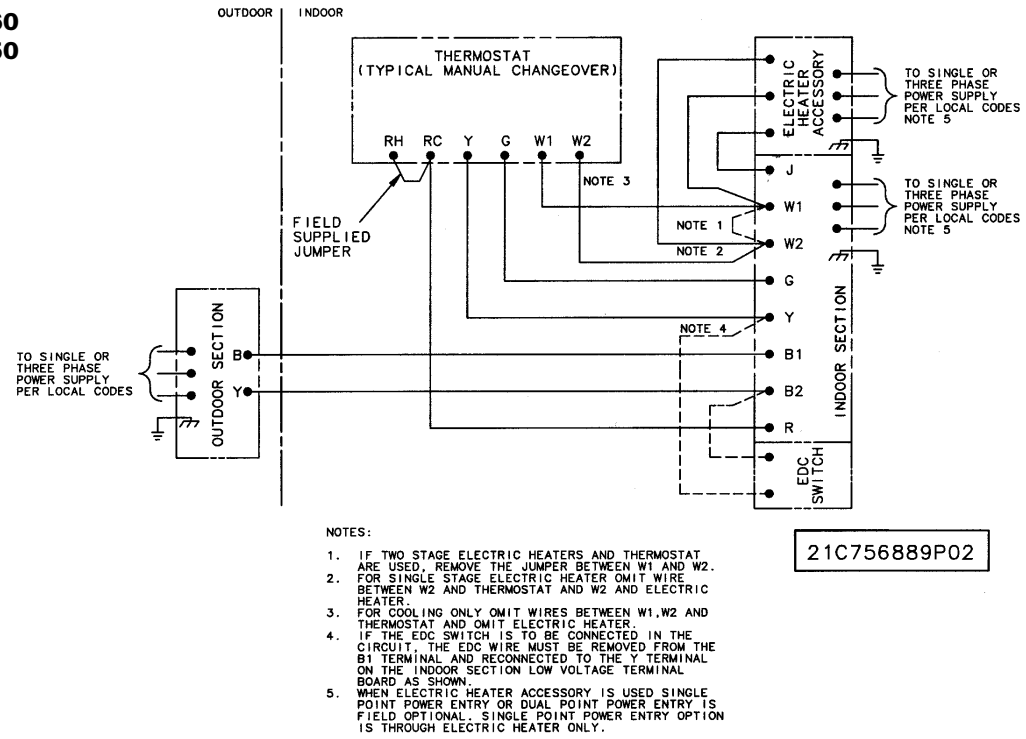

NOTES:

1. IF TWO STAGE ELECTRIC HEATERS AND THERMOSTAT ARE USED, REMOVE THE JUMPER BETWEEN W1 AND W2.
2. FOR SINGLE STAGE ELECTRIC HEATER OMIT WIRE BETWEEN W2 AND THERMOSTAT AND W2 AND ELECTRIC HEATER.
3. FOR COOLING ONLY OMIT WIRES BETWEEN W1,W2 AND THERMOSTAT AND OMIT ELECTRIC HEATER.
4. IF THE EDC SWITCH IS TO BE CONNECTED IN THE CIRCUIT, THE EDC WIRE MUST BE REMOVED FROM THE B1 TERMINAL AND RECONNECTED TO THE Y TERMINAL ON THE INDOOR SECTION LOW VOLTAGE TERMINAL BOARD AS SHOWN.
5. WHEN ELECTRIC HEATER ACCESSORY IS USED SINGLE POINT POWER ENTRY OR DUAL POINT POWER ENTRY IS FIELD OPTIONAL. SINGLE POINT POWER ENTRY OPTION IS THROUGH ELECTRIC HEATER ONLY.

Figure 17:
TW_060/TWE060
TW_050/TWE050

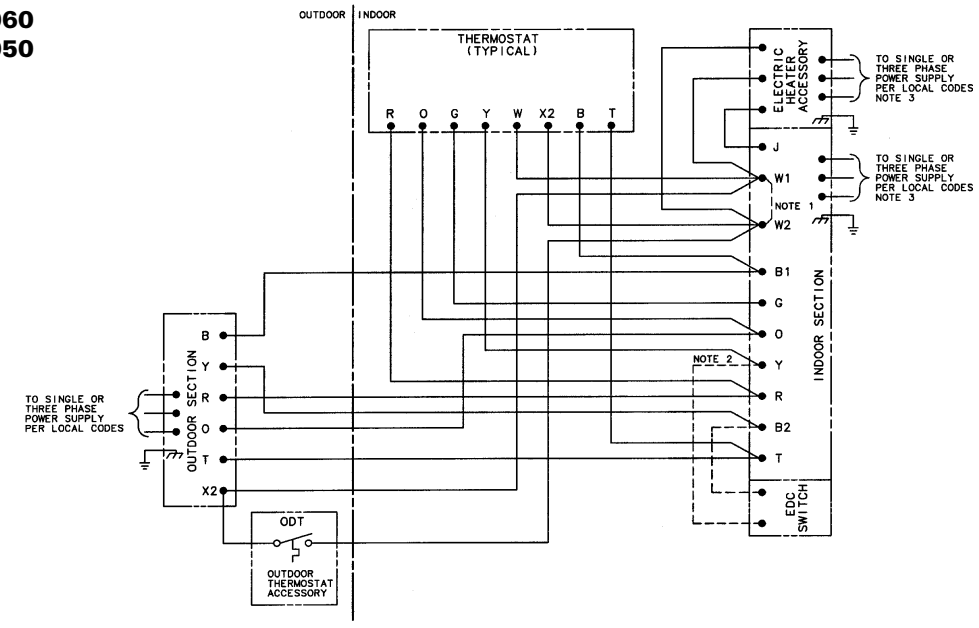

NOTES:

1. REMOVE JUMPER BETWEEN W1 AND W2 IF ODT ACCESSORY IS USED.
2. IF THE EDC SWITCH IS TO BE CONNECTED IN THE CIRCUIT, THE EDC WIRE MUST BE REMOVED FROM THE B1 TERMINAL AND RECONNECTED TO THE Y TERMINAL ON THE INDOOR SECTION LOW VOLTAGE TERMINAL BOARD AS SHOWN.
3. WHEN ELECTRIC HEATER ACCESSORY IS USED SINGLE POINT POWER ENTRY OR DUAL POINT POWER ENTRY IS FIELD OPTIONAL. SINGLE POINT POWER ENTRY OPTION IS THROUGH ELECTRIC HEATER ONLY.

Field Wiring

Figure 18:
TW_030/TWE060B
TW____/TWE090B
TW_060/TWE120B
TW_050/TWE100B

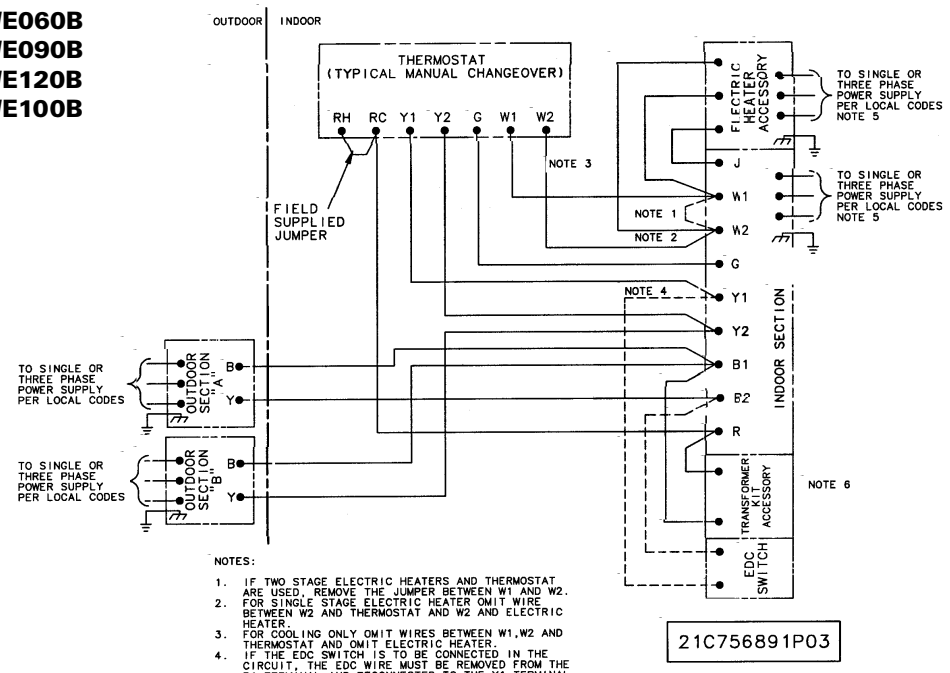

NOTES:

1. IF TWO STAGE ELECTRIC HEATERS AND THERMOSTAT ARE USED, REMOVE THE JUMPER BETWEEN W1 AND W2.
2. FOR SINGLE STAGE ELECTRIC HEATER OMIT WIRE BETWEEN W2 AND THERMOSTAT AND W2 AND ELECTRIC HEATER.
3. FOR COOLING ONLY OMIT WIRES BETWEEN W1,W2 AND THERMOSTAT AND OMIT ELECTRIC HEATER.
4. IF THE EDC SWITCH IS TO BE CONNECTED IN THE CIRCUIT, THE EDC WIRE MUST BE REMOVED FROM THE B1 TERMINAL AND RECONNECTED TO THE Y1 TERMINAL ON THE INDOOR SECTION LOW VOLTAGE TERMINAL BOARD AS SHOWN.
5. WHEN ELECTRIC HEATER ACCESSORY IS USED SINGLE POINT POWER ENTRY OR DUAL POINT POWER ENTRY IS FIELD OPTIONAL. SINGLE POINT POWER ENTRY OPTION IS THROUGH ELECTRIC HEATER ONLY.
6. THE CONTROL TRANSFORMER IS FACTORY INSTALLED IN THE TTE120B100, TWE120B100, AND TWE060B UNITS.

Figure 19:
TW_030/TWE060B
TW____/TWE090B
TW_060/TWE120B
TW_050/TWE100B

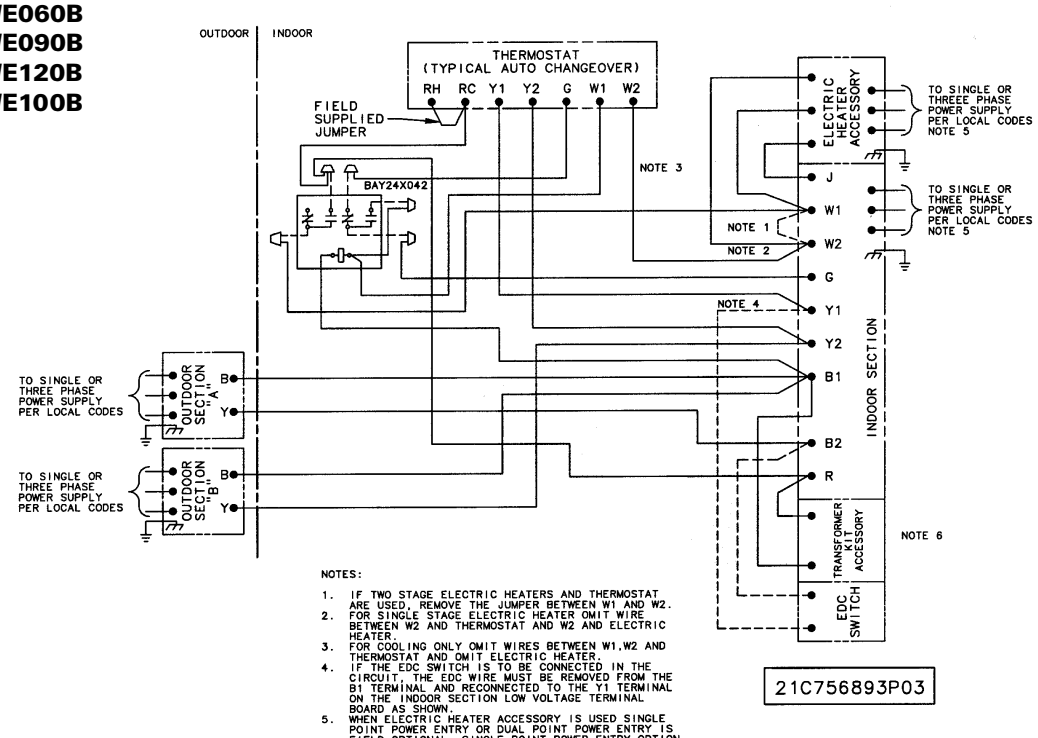

NOTES:

1. IF TWO STAGE ELECTRIC HEATERS AND THERMOSTAT ARE USED, REMOVE THE JUMPER BETWEEN W1 AND W2.
2. FOR SINGLE STAGE ELECTRIC HEATER OMIT WIRE BETWEEN W2 AND THERMOSTAT AND W2 AND ELECTRIC HEATER.
3. FOR COOLING ONLY OMIT WIRES BETWEEN W1,W2 AND THERMOSTAT AND OMIT ELECTRIC HEATER.
4. IF THE EDC SWITCH IS TO BE CONNECTED IN THE CIRCUIT, THE EDC WIRE MUST BE REMOVED FROM THE B1 TERMINAL AND RECONNECTED TO THE Y1 TERMINAL ON THE INDOOR SECTION LOW VOLTAGE TERMINAL BOARD AS SHOWN.
5. WHEN ELECTRIC HEATER ACCESSORY IS USED SINGLE POINT POWER ENTRY OR DUAL POINT POWER ENTRY IS FIELD OPTIONAL. SINGLE POINT POWER ENTRY OPTION IS THROUGH ELECTRIC HEATER ONLY.
6. THE CONTROL TRANSFORMER IS FACTORY INSTALLED IN THE TTE120B100,TWE120B100,AND TWE060B UNITS.

Field Wiring

Figure 20: Field Wiring

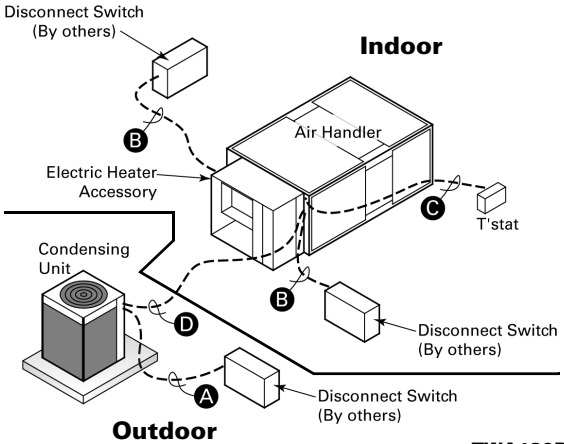

Notes:
1. Wiring shown with dashed lines is to be furnished and installed by the customer. All customer-supplied wiring must be copper only and must conform to NEC and local electrical codes. Codes may require line of sight between the disconnect switch and the unit.

2. When electric heater accessory is used, single point power entry or dual point power entry is field optional. Single point power entry option is through the electric heater only.

TTA150B/TWE150B
TTA180B/TWE180B
TTA240B/TWE240B
TTA180C/TWE180B
Field Wiring:
A — 3 power wires. Line voltage.
B — 3 power wires. Line voltage for 3 phase; 2 wires for single phase.
C — Cooling only thermostat: 4 wires, 24 volts.
— One Stage Electric heat: add 1 additional wire, 24 volts.
— Two Stage Electric heat: add 2 additional wires, 24 volts.
D — 5 wires, 24 volts.

TWA180B/TWE180B
TWA240B/TWE240B
Field Wiring:
A — 3 power wires. Line voltage.
B — 3 power wires. Line voltage for 3 phase; 2 wires for single phase.
C — Heat pump thermostat: 7 wires, 24 volts.
— Electric heat: add 2 additional wire, 24 volts.
D — 7 wires, 24 volts.
— Outdoor thermostat; add 1 additional wire, 24 volts.
— Electric heat: add 4 additional wires, 24 volts.

TTA090A/TWE180B
TTA120A/TWE240B
Field Wiring:
A — 3 power wires. Line voltage.
B — 3 power wires. Line voltage for 3 phase; 2 wires for single phase.
C — Cooling only thermostat: 4 wires, 24 volts.
— One Stage Electric heat: add 1 additional wire, 24 volts.
— Two Stage Electric heat: add 2 additional wires, 24 volts.
D — 6 wires, 24 volts.

(2) TWA090A/TWE180B
(2) TWA120A/TWE240B
Field Wiring:
A — 3 power wires. Line voltage.
B — 3 power wires. Line voltage e.
C — Heat pump thermostat: 7 wires, 24 volts.
— Electric heat: add 2 additional wire, 24 volts.
D — 9 wires, 24 volts.
— Outdoor thermostat; add 3 additional wire, 24 volts.
— Electric heat: add 2 additional wires, 24 volts.

Figure 21:
TTA150B,180B,240B/TWE180B,240B
TTA125B,155B,200B/TWE155B,200B
TTA155C/TWE155B
TTA180C/TWE180B

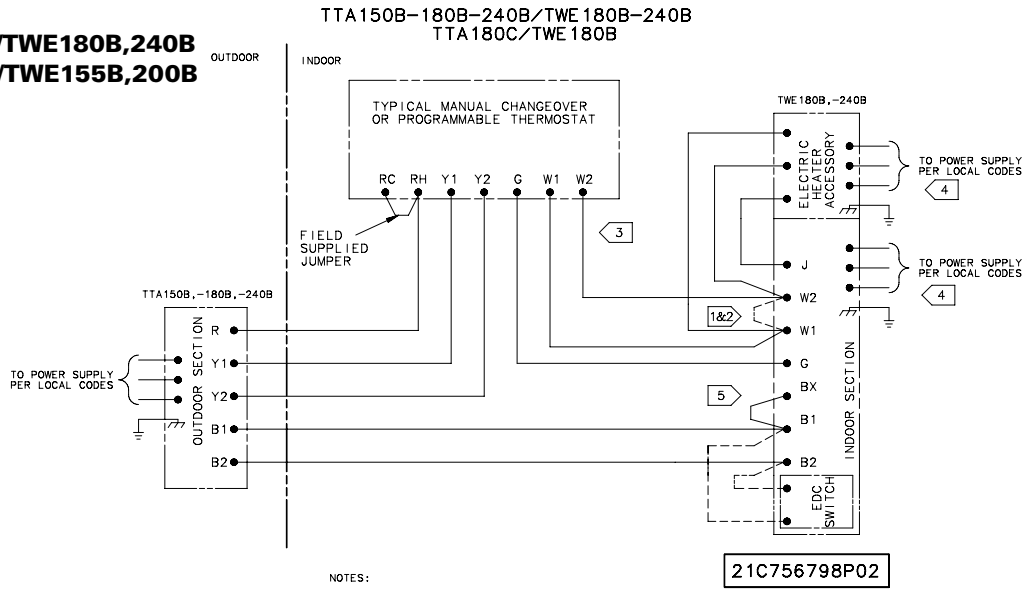

NOTES:
1. IF TWO STAGE ELECTRIC HEATERS AND THERMOSTAT ARE USED, REMOVE THE JUMPER BETWEEN W1 AND W2.
2. FOR SINGLE STAGE ELECTRIC HEATER OMIT WIRE BETWEEN W2 AND THERMOSTAT AND W2 AND ELECTRIC HEATER.
3. FOR COOLING ONLY OMIT WIRES BETWEEN W1,W2 AND THERMOSTAT AND OMIT ELECTRIC HEATER.
4. WHEN ELECTRIC HEATER ACCESSORY IS USED SINGLE POINT POWER ENTRY OR DUAL POINT POWER ENTRY IS FIELD OPTIONAL. SINGLE POINT POWER ENTRY OPTION IS THROUGH ELECTRIC HEATER ONLY.
5. WHEN ELECTRIC HEATER ACCESSORY IS USED A FIELD SUPPLIED JUMPER MUST BE PLACED BETWEEN "B1" AND "BX" ON THE INDOOR SECTION LOW VOLTAGE TERMINAL BOARD.

Field Wiring

Figure 22:
TTA150B,180B,240B/TWE180B,240B
TTA125B,155B,200B/TWE155B,200B
TTA155C/TWE155B
TTA180C/TWE180B

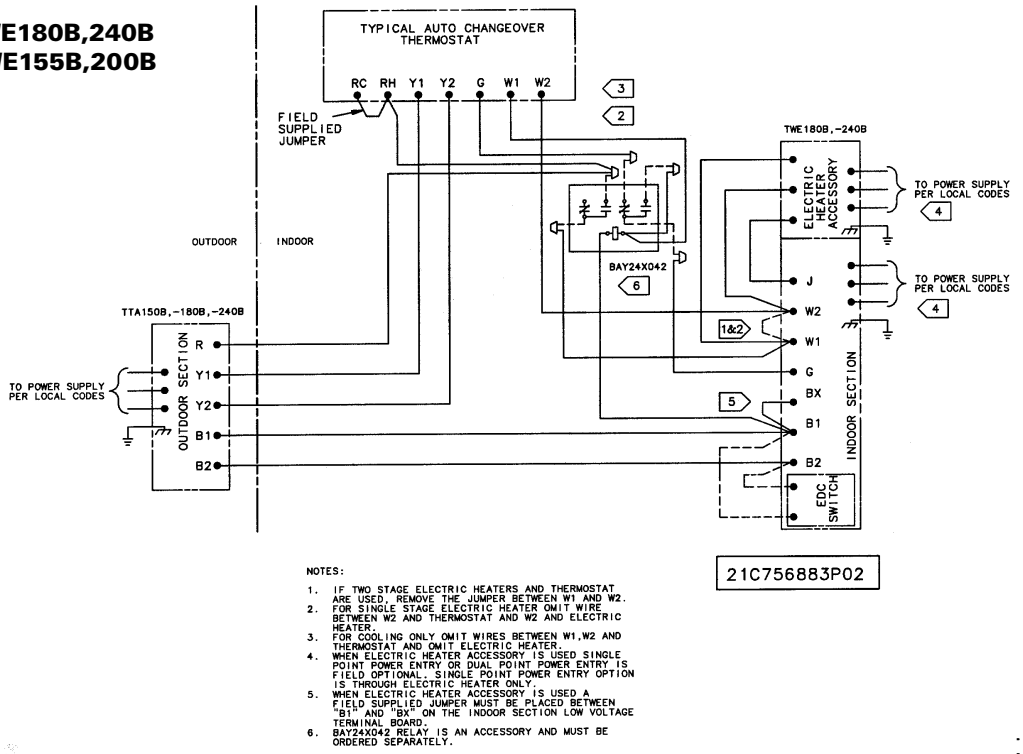

NOTES:

1. IF TWO STAGE ELECTRIC HEATERS AND THERMOSTAT ARE USED, REMOVE THE JUMPER BETWEEN W1 AND W2.
2. FOR SINGLE STAGE ELECTRIC HEATER OMIT WIRE BETWEEN W2 AND THERMOSTAT AND W2 AND ELECTRIC HEATER.
3. FOR COOLING ONLY OMIT WIRES BETWEEN W1,W2 AND THERMOSTAT AND OMIT ELECTRIC HEATER.
4. WHEN ELECTRIC HEATER ACCESSORY IS USED SINGLE POINT POWER ENTRY OR DUAL POINT POWER ENTRY IS FIELD OPTIONAL. SINGLE POINT POWER ENTRY OPTION IS THROUGH ELECTRIC HEATER ONLY.
5. WHEN ELECTRIC HEATER ACCESSORY IS USED A FIELD SUPPLIED JUMPER MUST BE PLACED BETWEEN "B1" AND "BX" ON THE INDOOR SECTION LOW VOLTAGE TERMINAL BOARD.
6. BAY24X042 RELAY IS AN ACCESSORY AND MUST BE ORDERED SEPARATELY.

Figure 23:
TWA180B,240B/TWE180B,240B
TWA155B,200B/TWE155B,200B

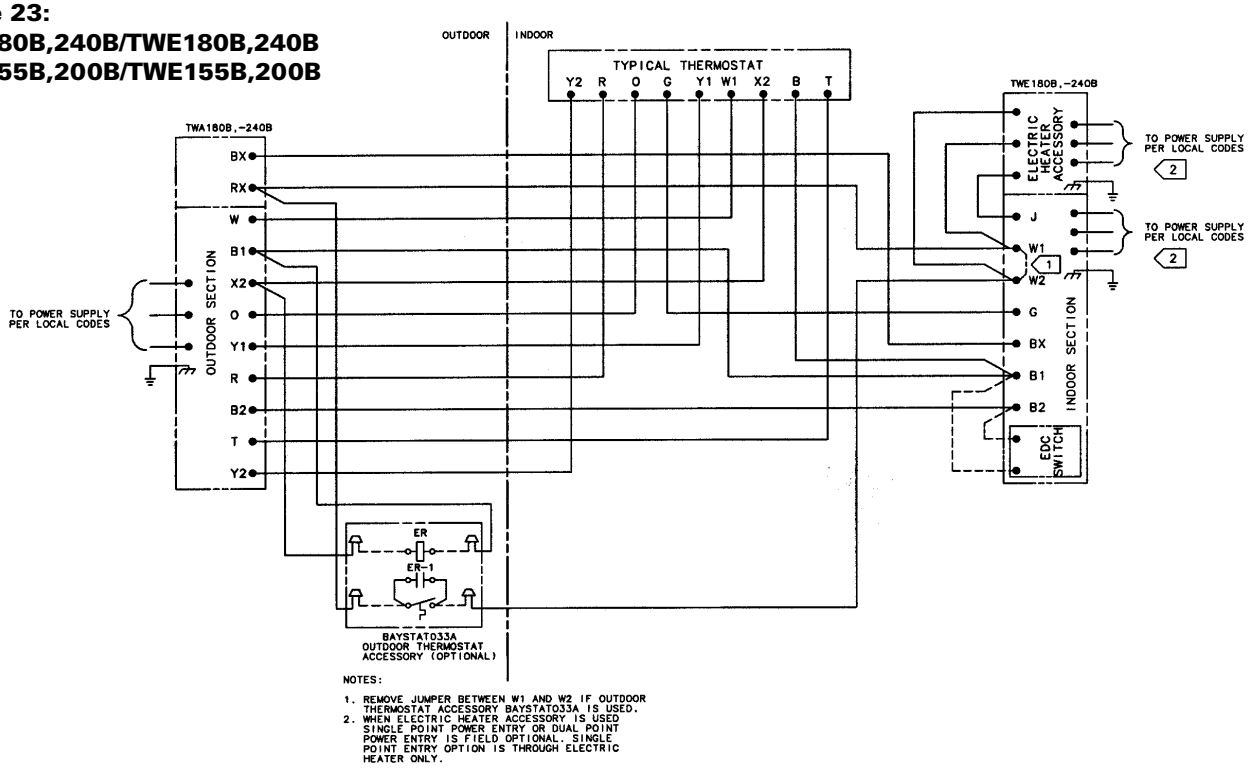

NOTES:

1. REMOVE JUMPER BETWEEN W1 AND W2 IF OUTDOOR THERMOSTAT ACCESSORY BAYSTAT033A IS USED.
2. WHEN ELECTRIC HEATER ACCESSORY IS USED SINGLE POINT POWER ENTRY OR DUAL POINT POWER ENTRY IS FIELD OPTIONAL. SINGLE POINT ENTRY OPTION IS THROUGH ELECTRIC HEATER ONLY.

Field Wiring

Figure 24:
TWA090A,120A/TWE180B,240B
TWA075A,100A/TWE155B,200B

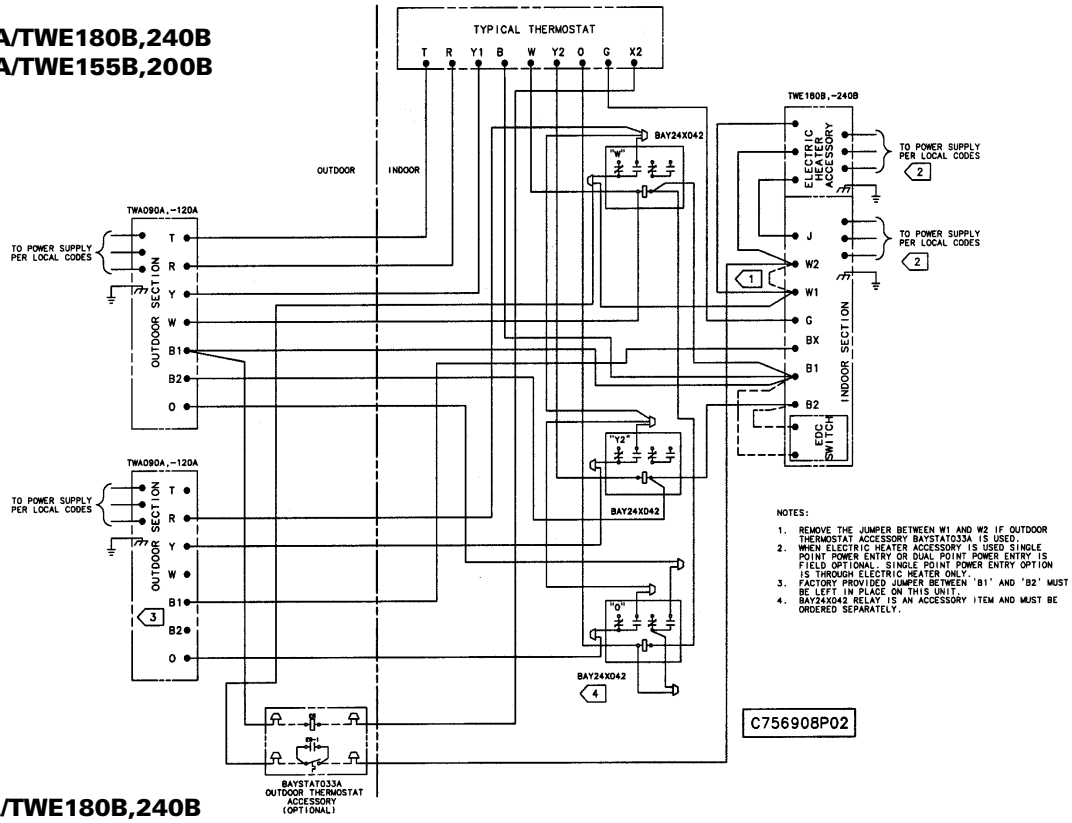

Figure 25:
TTA090A,120A/TWE180B,240B
TTA075A,100A/TWE155B,240B

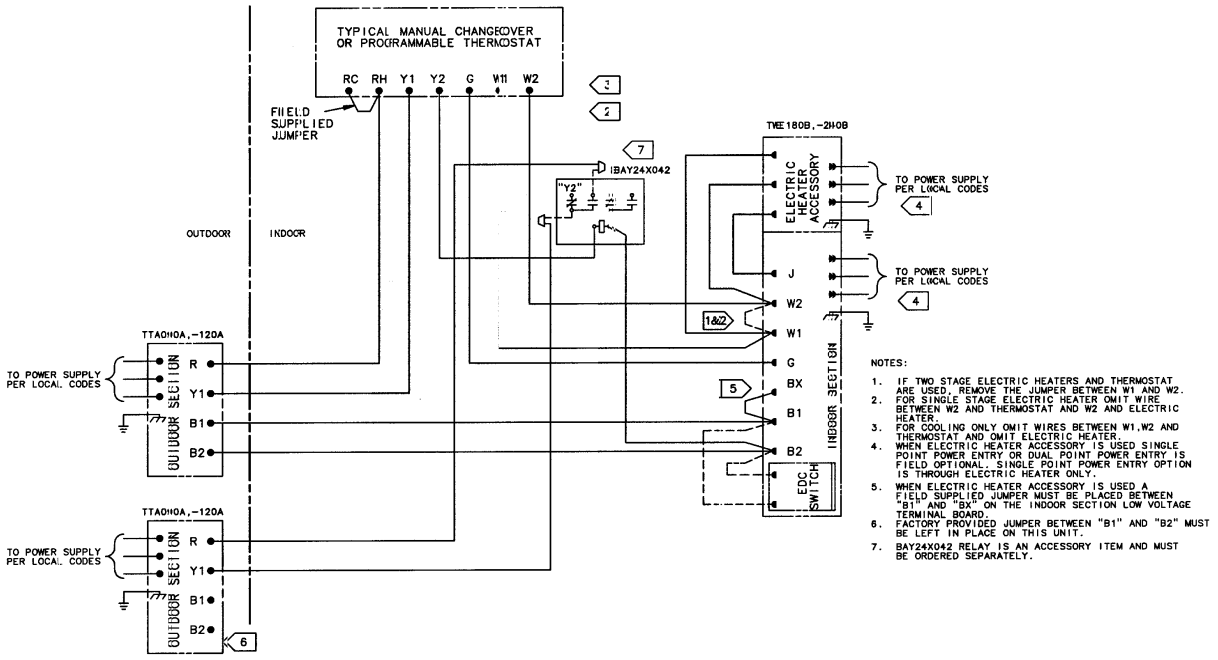

Field Wiring

Figure 26:
TTA090A,120A/TWE180B,240B
TTA075A,100A/TWE155B,200B

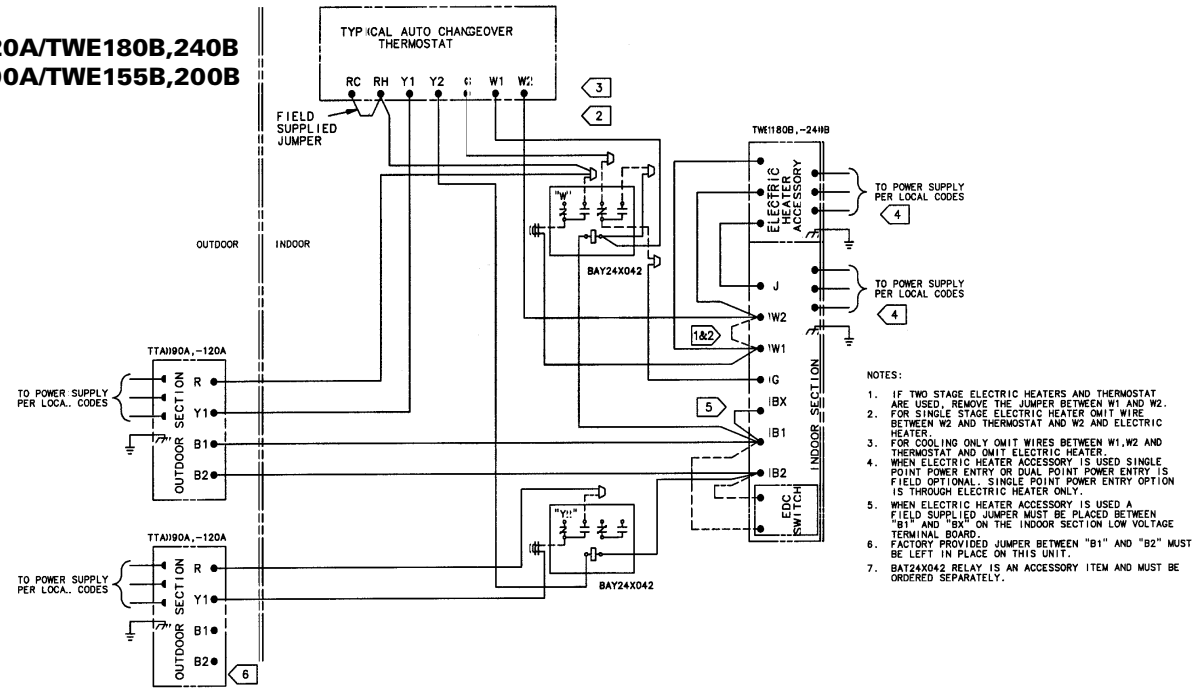

Figure 27:
TW_030A/TWE060B
TW_____/TWE090B
TW_060/TWE120B
TW_050/TWE100B

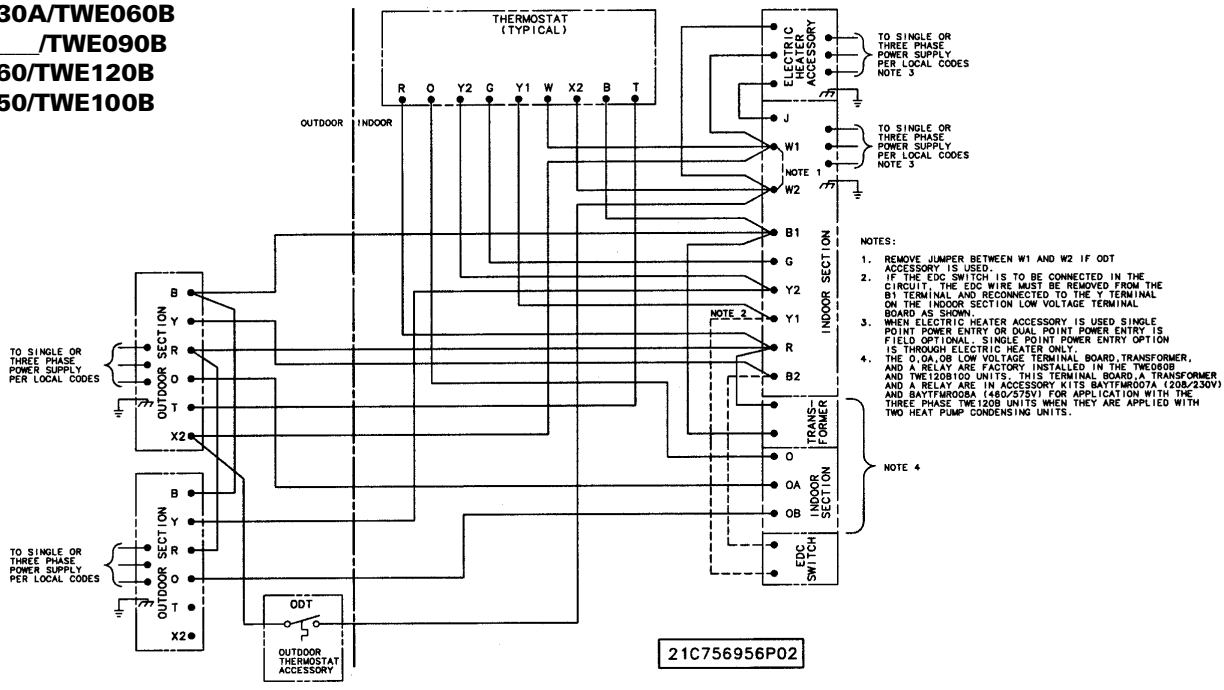

Warranty
Central Air Conditioner

TTA, TTN, TTP, TTR, TTB, TTX, TTY and TTZ (parts only)

This warranty is extended by Trane to the original purchaser and to any succeeding owner of the real property to which the Air Conditioner is originally affixed, and applies to products purchased and retained for use within the U.S.A. and Canada. There is no warranty against corrosion, erosion or deterioration.

If any part of your Air Conditioner fails because of a manufacturing defect within one year from the date of original purchase, Warrantor will furnish without charge the required replacement part.

In addition, if the sealed motor-compressor(s) fail(s) because of a manufacturing defect within the second through fifth year from the date of original purchase, Warrantor will furnish without charge a replacement compressor(s). Warrantor's obligations and liabilities under this warranty are limited to furnishing F.O.B. Warrantor factory or warehouse replacement parts for Warrantor's products covered under this warranty. Warrantor shall not be obligated to pay for the cost of lost refrigerant. No liability shall attach to Warrantor until products have been paid for and then liability shall be limited solely to the purchase price of the equipment under warranty shown to be defective.

THE WARRANTY AND LIABILITY SET FORTH HEREIN ARE IN LIEU OF ALL OTHER WARRANTIES AND LIABILITIES, WHETHER IN CONTRACT OR IN NEGLIGENCE, EXPRESS OR IMPLIED, IN LAW OR IN FACT, INCLUDING IMPLIED WARRANTIES OF MERCHANTABILITY AND FITNESS FOR PARTICULAR USE, AND IN NO EVENT SHALL WARRANTOR BE LIABLE FOR ANY INCIDENTAL OR CONSEQUENTIAL DAMAGES.

Some states do not allow limitations on how long an implied warranty lasts or do not allow the exclusion or limitation of incidental or consequential damages, so the above limitation or exclusion may not apply to you. This warranty gives you specific legal rights, and you may also have other rights which vary from state to state.

Trane
2701 Wilma Rudolph Blvd.
Clarksville, TN 37040-1008
Attention: Manager, Product Service

TW-338-0597
* This warranty is for commercial usage of said equipment and not applicable when the equipment is used for a residential application. Commercial use is any application where the end purchaser uses the product for other than personal, family or household purposes.

Warranty

Commercial Equipment Rated 20 Tons and Larger and Related Accessories (Parts Only)

PRODUCTS COVERED — This warranty is extended by Trane and applies only to commercial equipment rated 20 tons and larger and related accessories purchased and retained for use within the U.S.A. and Canada.
Warrantor warrants for a period of 12 months from initial start-up or 18 months from date of shipment, whichever is less, that the products covered by this warranty (1) are free from defects in material and manufacture, and (2) have the capacities and ratings set forth in catalogs and bulletins; provided, that no warranty is made against corrosion, erosion or deterioration. Warrantor's obligations and liabilities under this warranty are limited to furnishing, F.O.B. factory replacement parts (or equipment at the option of Warrantor) for all Warrantor's products not conforming to this warranty. Warrantor shall not be obligated to pay for the cost of lost refrigerant. No liability whatever shall attach to Warrantor until said products have been paid for and then said liability shall be limited to the purchase price of the equipment shown to be defective.

THE WARRANTY AND LIABILITY SET FORTH HEREIN ARE IN LIEU OF ALL OTHER WARRANTIES AND LIABILITIES, WHETHER IN CONTRACT OR IN NEGLIGENCE, EXPRESS OR IMPLIED, IN LAW OR IN FACT, INCLUDING IMPLIED WARRANTIES OF MERCHANTABILITY AND FITNESS FOR PARTICULAR USE, AND IN NO EVENT SHALL WARRANTOR BE LIABLE FOR ANY INCIDENTAL OR CONSEQUENTIAL DAMAGES.

Some states do not allow limitations on how long an implied warranty lasts or do not allow the exclusion or limitation of incidental or consequential damages, so the above limitation or exclusion may not apply to you. This warranty gives you specific legal rights, and you may also have other rights which vary from state to state.

Trane — Warrantor
2701 Wilma Rudolph Blvd.
Clarksville, TN 37040
GW-598-4799

Literature Order Number	TWE-SVX03C-EN
Date	December 2007
Supersedes	TWE-SVX03C-EN

The manufacturer has a policy of continuous product and data improvement and reserves the right to change design and specifications without notice.

ELECTRIC HEAT

MANUFACTURER: **TRANE**

MODEL #: **BAYHTRL**

Installer's Guide

Electric Heat

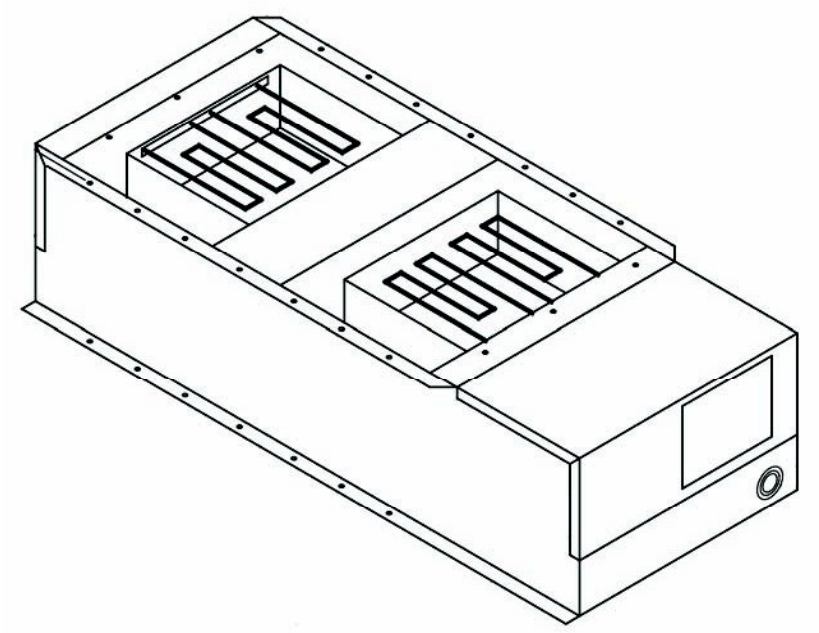

Model Numbers:
BAYHTRL
BAYHTRM

Used With:
TWE060A, B
TWE090A, B
TWE120A, B
TWE180B
TWE240B, E

December 2007

ACC-SVN91A-EN

Preface and Warnings and Cautions

NOTICE:

Warnings and Cautions appear at appropriate sections throughout this manual. Read these carefully.

⚠ WARNING

Indicates a potentially hazardous situation which, if not avoided, could result in death or serious injury.

⚠ CAUTION

Indicates a potentially hazardous situations which, if not avoided, may result in minor or moderate injury. It may also be used to alert against unsafe practices.

CAUTION

Indicates a situation that may result in equipment or property-damage-only accidents.

General

1. These instructions are for the installation of Accessory Electric Heaters into the Split System Heat Pump and Cooling Unit air handlers. Unit-to-heater matchup is described in Table 1 and Table 2.
2. These Air Handlers and Heaters are designed so that all Class I (high voltage) wiring between the heater and unit is accomplished by the method of hard wiring. Class II wiring (low voltage) is accomplished by push-on type wire connectors.
3. Find the heater model number on the heater nameplate. Check Table 1 and Table 2 to ensure heater selected is approved for use with the air handler in which it is to be installed, and that the power supply is compatible with this heater.

Inspection

Inspect the shipping carton and its contents. Check for concealed damage before it is stored or used. Report any damage immediately to the transportation company, and make any appropriate claims. Replace damaged parts with authorized parts only.

Parts List

1 - heater (with enclosure)
2 - cable clamps
2 - screws (for cable clamp)
2 - bullet wire ties
4 - regular wire ties
2 - plastic bushings
11 - screws (for the L series heaters)
20 - screws (for the M series heaters)

Table 1. Heater Compatibility, (L) Series

Units Model No.	Voltage/ Phase[i][ii]		Heaters
TWE060A1, B1	208-230	1 ph	BAYHTRL106A, 112A, 117A, 123A
TWE060A3, B3	208-230	3 ph	BAYHTRL305A, 310A, 315A, 325A
TWE060A4, B4	460	3 ph	BAYHTRL405A, 410A, 415A, 425A
TWE060AW	575	3 ph	BAYHTRLW05A, W10A, W15A, W25A
TWE090A1, B1 TWE120A1,B1	208-230	1ph	BAYHTRL106A, 112A, 117A, 123A, 129A
TWE090A3, B3 TWE120A3,B3	208-230	3 ph	BAYHTRL305A, 310A, 315A, 325A, 335A
TWE090A3[iii], B3[iii] TWE120A3[iii], B3[iii]	460	3 ph	BAYHTRL405A, 410A, 415A, 425A, 435A
TWE090AW TWE120AW,BW	575	3 ph	BAYHTRLW05A, W10A, W15A, W25A, W35A

(i) Voltages indicated are for Air Handlers.
(ii) For heater rated voltages, see heater nameplates.
(iii) Field converted to 460/3/60.

Table 2. Heater Compatibility, (M) Series

Units Model No.	Voltage/Phase[i][ii]		Heaters
TWE180B3, 240B3, 240E3	208-230	3ph	BAYHTRM310A, 320A, 330A, 350A
TWE180B4, 240B4, 240E4	460	3 ph	BAYHTRM410A, 420A, 430A, 450A
TWE180BW, 240BW, 240EW	575	3 PH	BAYHTRMW10A, W20A, W30A,W50A

(i) Voltages indicated are for Air Handlers.
(ii) For heater rated voltages, see heater nameplates.

© 2007 Trane All rights reserved

Contents

Installation 4
Wiring Diagrams 6
BAYHTRL106A 7
BAYHTRL112A 8
BAYHTRL117A 10
BAYHTRL123A 12
BAYHTRL129A 14
BAYHTRL305A/310A 16
BAYHTRM310A 18
BAYHTRL315A 19
BAYHTRM320A 21
BAYHTRL325A 22
BAYHTRM330A 24
BAYHTRL335A 25
BAYHTRM350A 27
BAYHTRL405A/410A/W05A/W10A 28
BAYHTRM410A/420A/W10A/W20A 30
BAYHTRL415A/W15A 31
BAYHTRL425A/W25A 33
BAYHTRM430A/W30A 35
BAYHTRL435A/W35A 36
BAYHTRM450A/W50A 38

Installation

⚠WARNING
Rotating Components!

During installation, testing, servicing and troubleshooting of this product it may be necessary to measure the speed of rotating components. Have a qualified or licensed service individual who has been properly trained in handling exposed rotating components, perform these tasks. Failure to follow all safety precautions when exposed to rotating components could result in death or serious injury.

Installation

Note: *All phases of this installation must comply with National, State, and Local Codes.*

1. Remove duct flange from around air discharge on top of the air handler. Retain screws and flange for (optional) installation on top of the heater. See Figure 1 and Figure 2.
2. Remove the control wire knockout (Knockout #1) from top of air handler (see Figure 1 and Figure 2), and insert plastic bushing supplied with heater. This knockout will also be used if single point power entry is utilized.

Note: *Important! For ventilation purposes, Heaters L112A, L117A, L123A, L129A, L325A, and L335A require that an additional knockout (knockout #2) be removed (see Figure 1).*

Note: *When using BAYHTRL325A with a TWE060A3 or B3 (5 ton) air handler, the heater baffle must be removed (see Figure 3).*

3. Remove air handler access panel and control box cover. For single point power entry, insert a plastic bushing (supplied) in lower hole, rear of the air handler control box.
4. Place heater on air handler and secure in place with the screws provided.

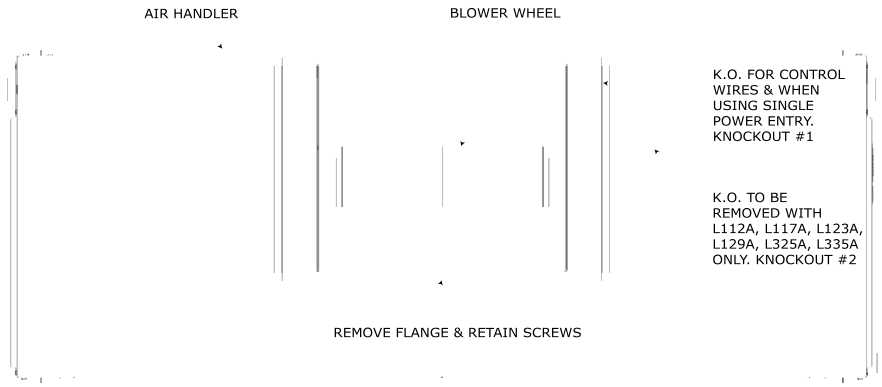

Figure 1. Top of Air Handler Single Blower

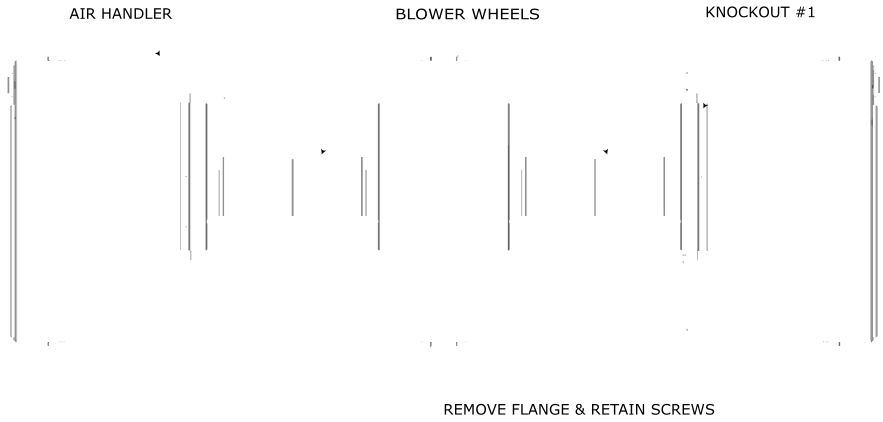

Figure 2. Top of Air Handler Dual Blower

Low Voltage Wires (24 Volts)

1. For Heaters with single stage heat, there will be 1 brown wire and 1 black wire.
2. For Heaters with two stage heat, there will be 1 brown wire, 1 black wire and 1 orange wire.
3. Route the 2 or 3 low voltage wires down through the plastic bushing in the knockout #1 to the low voltage terminal block mounted on the side of the control box. Wire according to heater wiring diagram.
4. Wire ties and cable clamps supplied should be used to secure the wires from the heater to the air handler control box in a location that will not allow them to interfere with any moving parts.

Note: *Important! When a TWE180B or TWE240B/E air handler is used with a TTA150B, 180B, or a 240B/E, a field provided jumper must be installed between B1 and BX on the air handler low voltage terminal board. See Air Handler installer guide interconnect wiring diagram for details.*

High Voltage Wires (24 Volts)

CAUTION
Use Copper Conductors Only!

Unit terminals are not designed to accept other types of conductors. Failure to use copper conductors may result in equipment damage.

1. For single point power entry, route 2 or 3 red wires, down through the plastic bushing in knockout #1 and into the air handler control box.

Note: *For single phase there will be 2 red wires, and for 3 phase there will be 3 red wires.*

2. The 2 or 3 red wires should be hard wired to the bottom contracts of the air handler contactor per the wiring diagram.

Note: *Important! When the dual point power entry option is used, the high voltage wires, for single point power entry, should remain capped, coiled up and clamped inside the heater control box.*

3. When using dual point power entry, knockouts on the control end of both the air handler and the heater are to be used. See Figure 4 for location of each.
4. Replace air handler control box cover.

   Replace air handler access panel.
5. Replace control box panel on accessory heater.
6. Check blower rotation. If incorrect, change positions of any two power leads at fan contactor (F). After electrical hookup has been completed, duct work can be assembled. The duct flanges removed from the air handler, can be secured in place on top of the heater and the duct work can be attached or the flange can be discarded and the duct can be fashioned to fit up to the heater.

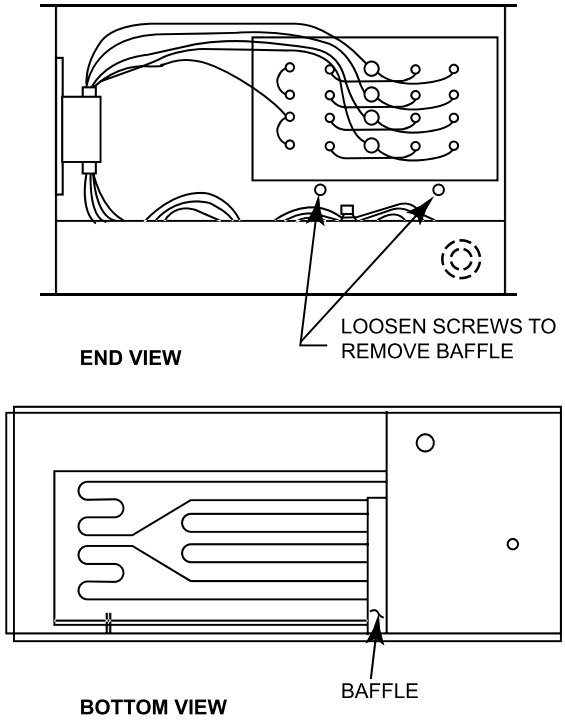

Figure 3. End View

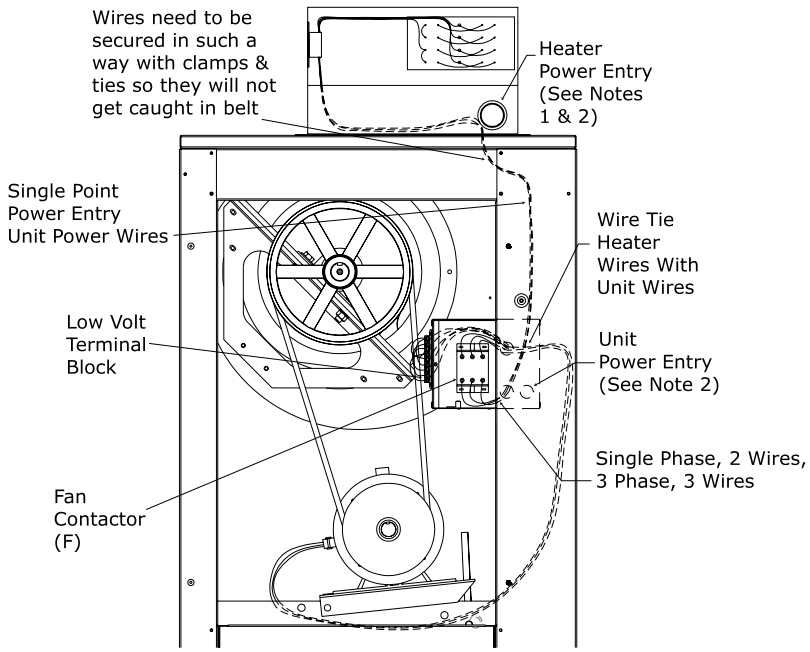

Notes:
1) A. For power supply to heater only see the heater nameplate to determine "MCA" and overcurrent protection device values.
   B. For single point power entry option (heater & blower motor) see the "heater installed" nameplate on the air handler for "MCA" and overcurrent protection device values.
2) When electric heater accessory is used single point power entry or dual point power entry is field optional. Single point power entry option is through electric heater only.

Figure 4.

Wiring Diagrams

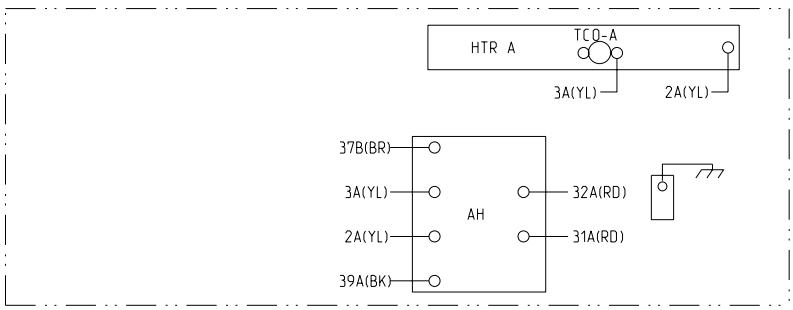

NOTES:
1. FIELD CONNECT CONTROL LEADS AS SHOWN:
   39A(BK)-LVTB W1 (FIRST STAGE HEAT)
   37B(BR)-LVTB J (HEATER/FAN INTERLOCK)
2. FOR SINGLE POWER ENTRY OPTION REMOVE CN-1 AND CN-2 FROM RED WIRES AND TERMINATE THESE WIRES AT THE AIR HANDLER CONTACTOR (F) AS SHOWN SEE THE HEATER INSTALLERS GUIDE AND AIR HANDLER WIRING DIAGRAM ON AIR HANDLER CONTROL BOX COVER FOR DETAILS.
3. BUSHING IS PROVIDED WITH HEATER.

CAUTION-NOT SUITABLE FOR USE ON SYSTEMS EXCEEDING 150 VOLTS TO GROUND.
ATTENTION: NE CONVIENT PAS POUR LES INSTALLATIONS DE PLUS DE 150V. À TERRE.

DEVICE	DESCRIPTION	LINE
AH	CONTACTOR,HEATER	11
HTR	HEATER RACK	2
TCO	LIMIT CONTROL	2
F	FAN CONTACTOR	18
LVTB	LOW VOLTAGE BOARD	15,16

WIRE COLOR DESIGNATION			
ABBR	COLOR	ABBR	COLOR
BK	BLACK	RD	RED
BL	BLUE	OR	ORANGE
BR	BROWN	YL	YELLOW

MODEL NO.	ELECTRICAL RATING			
	240 VOLTS		208 VOLTS	
	KW	AMPS	KW	AMPS
BAYHTRL106A	5.76	24	4.33	20.8

CAUTION

USE COPPER CONDUCTORS ONLY!

UNIT TERMINALS ARE NOT DESIGNED TO ACCEPT OTHER TYPES OF CONDUCTORS.

FAILURE TO DO SO MAY CAUSE DAMAGE TO THE EQUIPMENT.

ATTENTION

N'UTILISER QUE DES CONDUCTEURS EN CUIVRE!

LES BORNES DE L'UNITÉ NE SONT PAS CONÇUES POUR RECEVOIR D'AUTRES TYPES DE CONDUCTEURS.

L'UTILISATION DE TOUT AUTRE CONDUCTEUR PEUT ENDOMMAGER L'ÉQUIPEMENT.

PRECAUCIÓN

¡UTILICE ÚNICAMENTE CONDUCTORES DE COBRE!

LAS TERMINALES DE LA UNIDAD NO ESTÁN DISEÑADAS PARA ACEPTAR OTROS TIPOS DE CONDUCTORES.

SI NO LO HACE, PUEDE OCASIONAR DAÑO AL EQUIPO.

⚠ WARNING

HAZARDOUS VOLTAGE!

DISCONNECT ALL ELECTRIC POWER INCLUDING REMOTE DISCONNECTS AND FOLLOW LOCK OUT AND TAG PROCEDURES BEFORE SERVICING. INSURE THAT ALL MOTOR CAPACITORS HAVE DISCHARGED STORED VOLTAGE. UNITS WITH VARIABLE SPEED DRIVE, REFER TO DRIVE INSTRUCTIONS FOR CAPACITOR DISCHARGE.

FAILURE TO DO THE ABOVE BEFORE SERVICING COULD RESULT IN DEATH OR SERIOUS INJURY.

⚠ AVERTISSEMENT

TENSION DANGEREUSE!

COUPER TOUTES LES TENSIONS ET OUVRIR LES SECTIONNEURS À DISTANCE, PUIS SUIVRE LES PROCÉDURES DE VERROUILLAGE ET DES ÉTIQUETTES AVANT TOUTE INTERVENTION. VÉRIFIER QUE TOUS LES CONDENSATEURS DES MOTEURS SONT DÉCHARGÉS. DANS LE CAS D'UNITÉS COMPORTANT DES ENTRAÎNEMENTS À VITESSE VARAIBLE, SE REPORTER AUX INSTRUCTIONS DE L'ENTRAÎNEMENT POUR DÉCHARGER LES CONDENSATEURS.

NE PAS RESPECTER CES MESURES DE PRÉCAUTION PEUT ENTRAÎNER DES BLESSURES GRAVES POUVANT ÊTRE MORTELLES.

⚠ ADVERTENCIA

¡VOLTAJE PELIGROSO!

DESCONECTE TODA LA ENERGÍA ELÉCTRICA, INCLUSO LAS DESCONEXIONES REMOTAS Y SIGA LOS PROCEDIMIENTOS DE CIERRE Y ETIQUETADO ANTES DE PROCEDER AL SERVICIO. ASEGÚRESE DE QUE TODOS LOS CAPACITORES DEL MOTOR HAYAN DESCARGADO EL VOLTAJE ALMACENADO. PARA LAS UNIDADES CON EJE DE DIRECCIÓN DE VELOCIDAD VARIABLE, CONSULTE LAS INSTRUCCIONES PARA LA DESCARGA DEL CONDENSADOR.

EL NO REALIZAR LO ANTERIORMENTE INDICADO, PODRÍA OCASIONAR LA MUERTE O SERIAS LESIONES PERSONALES.

Figure 5. Wiring Diagram for BAYHTRL106A

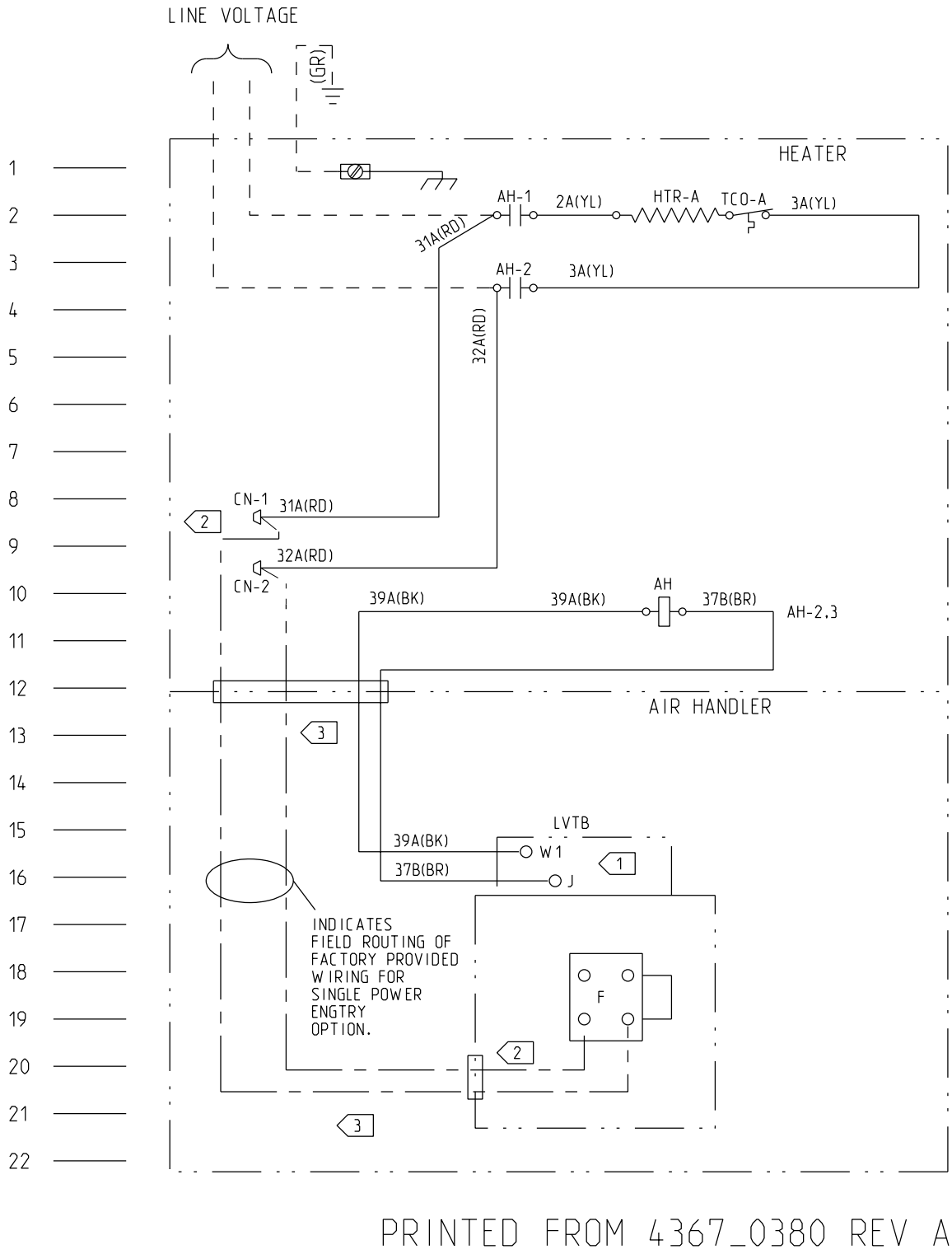

Figure 6. Wiring Diagram for BAYHTRL106A (continued)

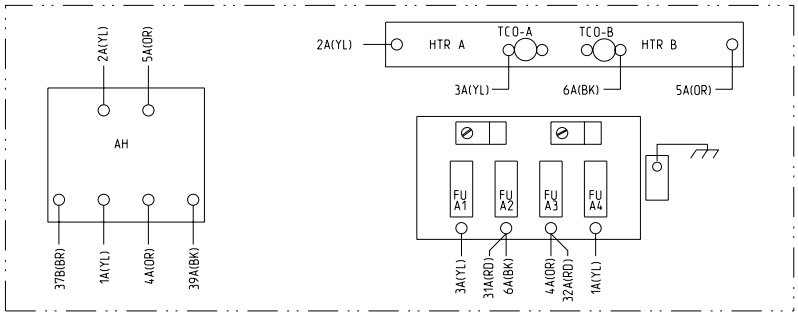

	FUSE SIZE
FU-A1	30A
FU-A2	60A
FU-A3	60A
FU-A4	30A

⚠ WARNING

HAZARDOUS VOLTAGE!

DISCONNECT ALL ELECTRIC POWER INCLUDING REMOTE DISCONNECTS AND FOLLOW LOCK OUT AND TAG PROCEDURES BEFORE SERVICING. INSURE THAT ALL MOTOR CAPACITORS HAVE DISCHARGED STORED VOLTAGE. UNITS WITH VARIABLE SPEED DRIVE, REFER TO DRIVE INSTRUCTIONS FOR CAPACITOR DISCHARGE.

FAILURE TO DO THE ABOVE BEFORE SERVICING COULD RESULT IN DEATH OR SERIOUS INJURY.

⚠ AVERTISSEMENT

TENSION DANGEREUSE!

COUPER TOUTES LES TENSIONS ET OUVRIR LES SECTIONNEURS À DISTANCE. PUIS SUIVRE LES PROCÉDURES DE VERROUILLAGE ET DES ÉTIQUETTES AVANT TOUTE INTERVENTION. VÉRIFIER QUE TOUS LES CONDENSATEURS DES MOTEURS SONT DÉCHARGÉS. DANS LE CAS D'UNITÉS COMPORTANT DES ENTRAÎNEMENTS À VITESSE VARAIBLE, SE REPORTER AUX INSTRUCTIONS DE L'ENTRAÎNEMENT POUR DÉCHARGER LES CONDENSATEURS.

NE PAS RESPECTER CES MESURES DE PRÉCAUTION PEUT ENTRAÎNER DES BLESSURES GRAVES POUVANT ÊTRE MORTELLES.

⚠ ADVERTENCIA

¡VOLTAJE PELIGROSO!

DESCONECTE TODA LA ENERGÍA ELÉCTRICA, INCLUSO LAS DESCONEXIONES REMOTAS Y SIGA LOS PROCEDIMIENTOS DE CIERRE Y ETIQUETADO ANTES DE PROCEDER AL SERVICIO. ASEGÚRESE DE QUE TODOS LOS CAPACITORES DEL MOTOR HAYAN DESCARGADO EL VOLTAJE ALMACENADO. PARA LAS UNIDADES CON EJE DE DIRECCIÓN DE VELOCIDAD VARIABLE, CONSULTE LAS INSTRUCCIONES PARA LA DESCARGA DEL CONDENSADOR.

EL NO REALIZAR LO ANTERIORMENTE INDICADO, PODRÍA OCASIONAR LA MUERTE O SERIAS LESIONES PERSONALES.

CAUTION

USE COPPER CONDUCTORS ONLY!

UNIT TERMINALS ARE NOT DESIGNED TO ACCEPT OTHER TYPES OF CONDUCTORS.

FAILURE TO DO SO MAY CAUSE DAMAGE TO THE EQUIPMENT.

ATTENTION

N'UTILISER QUE DES CONDUCTEURS EN CUIVRE!

LES BORNES DE L'UNITÉ NE SONT PAS CONÇUES POUR RECEVOIR D'AUTRES TYPES DE CONDUCTEURS.

L'UTILISATION DE TOUT AUTRE CONDUCTEUR PEUT ENDOMMAGER L'ÉQUIPEMENT.

PRECAUCIÓN

¡UTILICE ÚNICAMENTE CONDUCTORES DE COBRE!

LAS TERMINALES DE LA UNIDAD NO ESTÁN DISEÑADAS PARA ACEPTAR OTROS TIPOS DE CONDUCTORES.

SI NO LO HACE, PUEDE OCASIONAR DAÑO AL EQUIPO.

NOTES:

1. FIELD CONNECT CONTROL LEADS AS SHOWN:
   39A(BK)-LVTB W1 (FIRST STAGE HEAT)
   37B(BR)-LVTB J (HEATER/FAN INTERLOCK)
2. FOR SINGLE POWER ENTRY OPTION REMOVE CN-1 AND CN-2 FROM RED WIRES AND TERMINATE THESE WIRES AT THE AIR HANDLER CONTACTOR (F) AS SHOWN SEE THE HEATER INSTALLERS GUIDE AND AIR HANDLER WIRING DIAGRAM ON AIR HANDLER CONTROL BOX COVER FOR DETAILS.
3. BUSHING IS PROVIDED WITH HEATER.

CAUTION-NOT SUITABLE FOR USE ON SYSTEMS EXCEEDING 150 VOLTS TO GROUND.
ATTENTION: NE CONVIENT PAS POUR LES INSTALLATIONS DE PLUS DE 150V. À TERRE.

DEVICE	DESCRIPTION	LINE
AH	CONTACTOR,HEATER	11
FU	FUSE	2-8
HTR	HEATER RACK	2-4
TCO	LIMIT CONTROL	2-4
F	FAN CONTACTOR	18
LVTB	LOW VOLTAGE BOARD	15,16

WIRE COLOR DESIGNATION			
ABBR	COLOR	ABBR	COLOR
BK	BLACK	RD	RED
BL	BLUE	OR	ORANGE
BR	BROWN	YL	YELLOW

MODEL NO.	ELECTRICAL RATING			
	240 VOLTS		208 VOLTS	
	KW	AMPS	KW	AMPS
BAYHTRL112A	11.52	48	8.65	41.6

Figure 7. Wiring Diagram for BAYHTRL112A

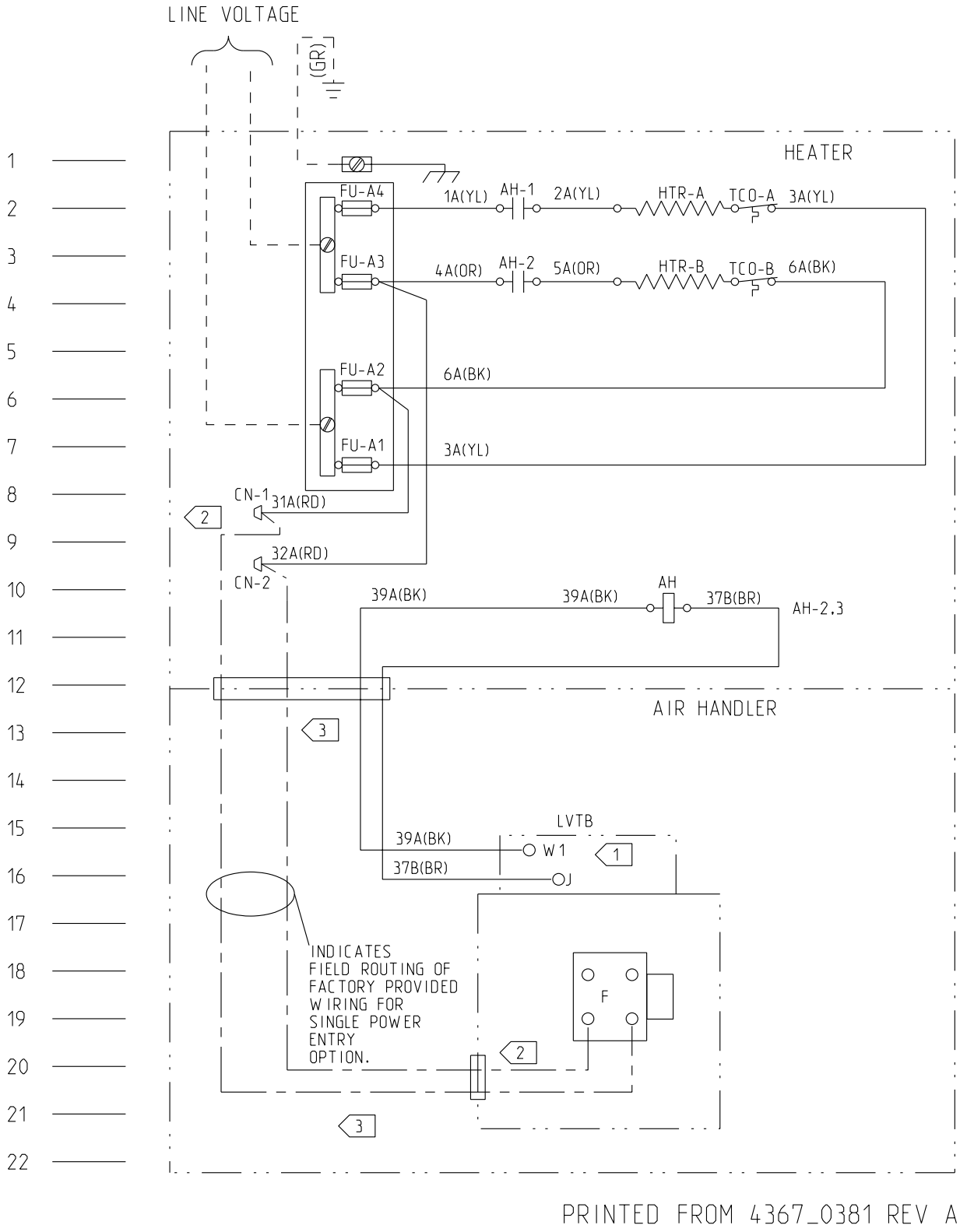

Figure 8. Wiring Diagram for BAYHTRL112A (continued)

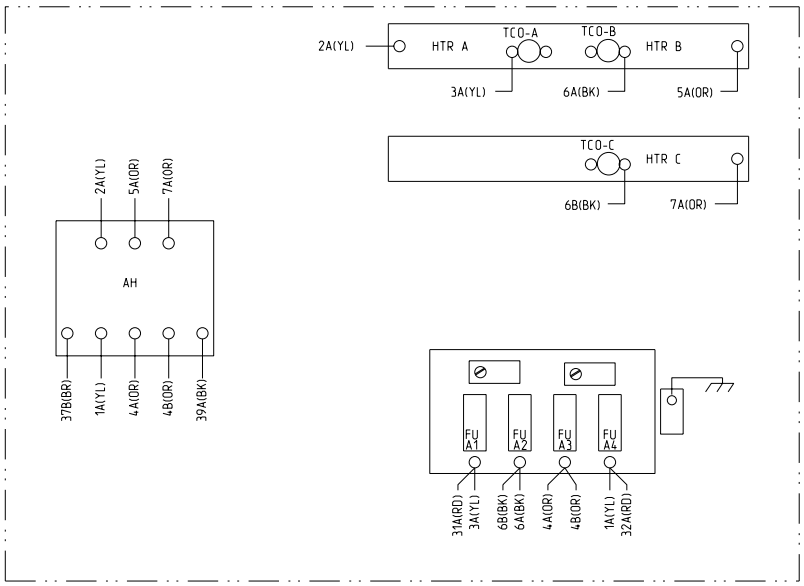

CAUTION

USE COPPER CONDUCTORS ONLY!

UNIT TERMINALS ARE NOT DESIGNED TO ACCEPT OTHER TYPES OF CONDUCTORS.

FAILURE TO DO SO MAY CAUSE DAMAGE TO THE EQUIPMENT.

ATTENTION

N'UTILISER QUE DES CONDUCTEURS EN CUIVRE!

LES BORNES DE L'UNITÉ NE SONT PAS CONÇUES POUR RECEVOIR D'AUTRES TYPES DE CONDUCTEURS.

L'UTILISATION DE TOUT AUTRE CONDUCTEUR PEUT ENDOMMAGER L'ÉQUIPEMENT.

PRECAUCIÓN

¡UTILICE ÚNICAMENTE CONDUCTORES DE COBRE!

LAS TERMINALES DE LA UNIDAD NO ESTÁN DISEÑADAS PARA ACEPTAR OTROS TIPOS DE CONDUCTORES.

SI NO LO HACE, PUEDE OCASIONAR DAÑO AL EQUIPO.

NOTES:
1. FIELD CONNECT CONTROL LEADS AS SHOWN:
   39A(BK)-LVTB W1 (FIRST STAGE HEAT)
   37B(BR)-LVTB J (HEATER/FAN INTERLOCK)
2. FOR SINGLE POWER ENTRY OPTION REMOVE CN-1 AND CN-2 FROM RED WIRES AND TERMINATE THESE WIRES AT THE AIR HANDLER CONTACTOR (F) AS SHOWN SEE THE HEATER INSTALLERS GUIDE AND AIR HANDLER WIRING DIAGRAM ON AIR HANDLER CONTROL BOX COVER FOR DETAILS.
3. BUSHING IS PROVIDED WITH HEATER.

CAUTION-NOT SUITABLE FOR USE ON SYSTEMS EXCEEDING 150 VOLTS TO GROUND.
ATTENTION: NE CONVIENT PAS POUR LES INSTALLATIONS DE PLUS DE 150V. A TERRE.

DEVICE	DESCRIPTION	LINE
AH	CONTACTOR,HEATER	11
FU	FUSE	2-8
HTR	HEATER RACK	2-4
TCO	LIMIT CONTROL	2-4
F	FAN CONTACTOR	18
LVTB	LOW VOLTAGE BOARD	15.16

	FUSE SIZE
A1	60A
A2	60A
A3	60A
A4	60A

WIRE COLOR DESIGNATION			
ABBR	COLOR	ABBR	COLOR
BK	BLACK	RD	RED
BL	BLUE	OR	ORANGE
BR	BROWN	YL	YELLOW

MODEL NO.	ELECTRICAL RATING			
	240 VOLTS		208 VOLTS	
	KW	AMPS	KW	AMPS
BAYHTRL117A	17.28	72	12.98	62.4

⚠ WARNING

HAZARDOUS VOLTAGE!

DISCONNECT ALL ELECTRIC POWER INCLUDING REMOTE DISCONNECTS AND FOLLOW LOCK OUT AND TAG PROCEDURES BEFORE SERVICING. INSURE THAT ALL MOTOR CAPACITORS HAVE DISCHARGED STORED VOLTAGE. UNITS WITH VARIABLE SPEED DRIVE, REFER TO DRIVE INSTRUCTIONS FOR CAPACITOR DISCHARGE.

FAILURE TO DO THE ABOVE BEFORE SERVICING COULD RESULT IN DEATH OR SERIOUS INJURY.

⚠ AVERTISSEMENT

TENSION DANGEREUSE!

COUPER TOUTES LES TENSIONS ET OUVRIR LES SECTIONNEURS À DISTANCE, PUIS SUIVRE LES PROCÉDURES DE VERROUILLAGE ET DES ÉTIQUETTES AVANT TOUTE INTERVENTION. VÉRIFIER QUE TOUS LES CONDENSATEURS DES MOTEURS SONT DÉCHARGÉS. DANS LE CAS D'UNITÉS COMPORTANT DES ENTRAÎNEMENTS À VITESSE VARIABLE, SE REPORTER AUX INSTRUCTIONS DE L'ENTRAÎNEMENT POUR DÉCHARGER LES CONDENSATEURS.

NE PAS RESPECTER CES MESURES DE PRÉCAUTION PEUT ENTRAÎNER DES BLESSURES GRAVES POUVANT ÊTRE MORTELLES.

⚠ ADVERTENCIA

¡VOLTAJE PELIGROSO!

DESCONECTE TODA LA ENERGÍA ELÉCTRICA, INCLUSO LAS DESCONEXIONES REMOTAS Y SIGA LOS PROCEDIMIENTOS DE CIERRE Y ETIQUETADO ANTES DE PROCEDER AL SERVICIO. ASEGÚRESE DE QUE TODOS LOS CAPACITORES DEL MOTOR HAYAN DESCARGADO EL VOLTAJE ALMACENADO. PARA LAS UNIDADES CON EJE DE DIRECCIÓN DE VELOCIDAD VARIABLE, CONSULTE LAS INSTRUCCIONES PARA LA DESCARGA DEL CONDENSADOR.

EL NO REALIZAR LO ANTERIORMENTE INDICADO, PODRÍA OCASIONAR LA MUERTE O SERIAS LESIONES PERSONALES.

Figure 9. Wiring Diagram for BAYHTRL117A

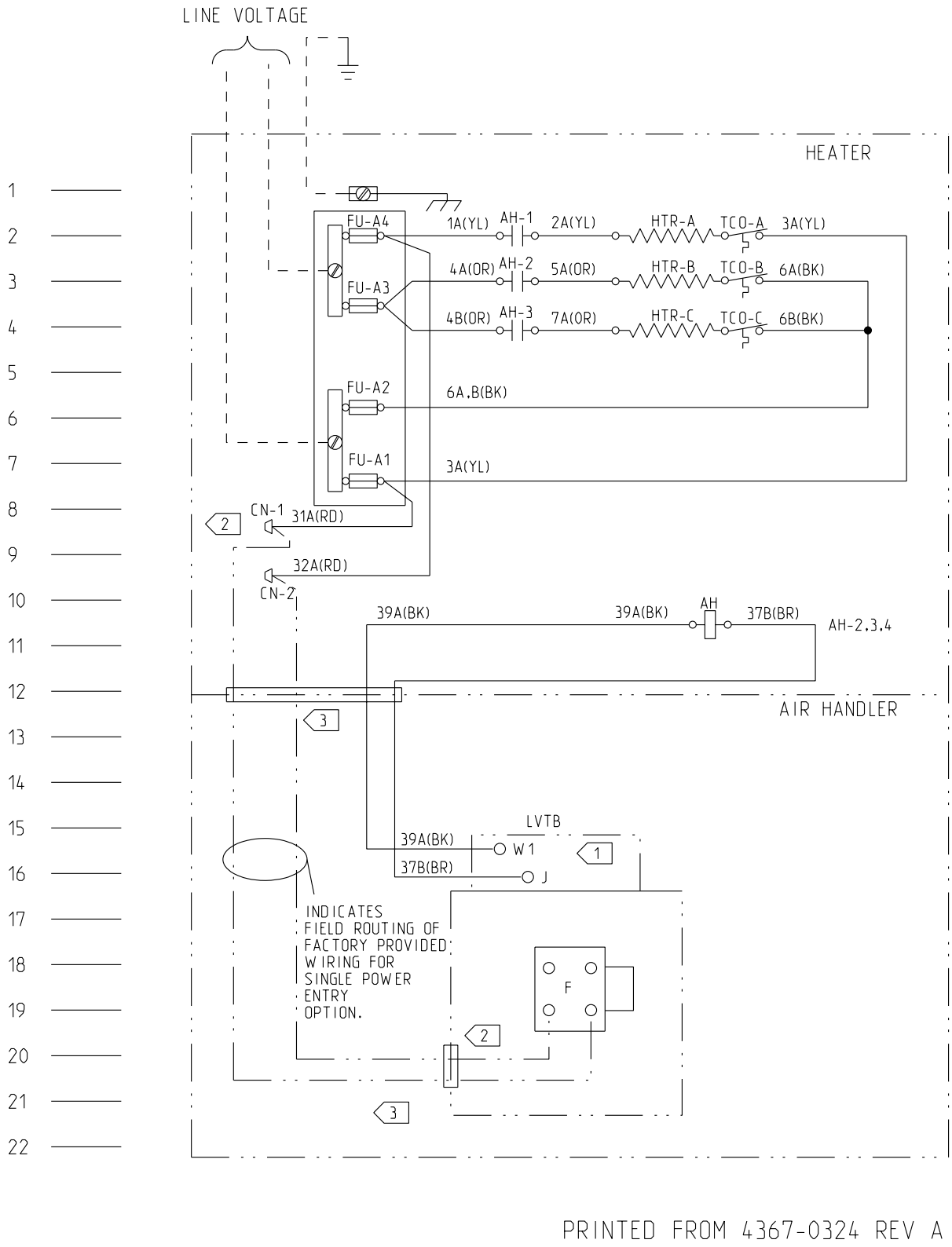

Figure 10. Wiring Diagram for BAYHTRL117A (continued)

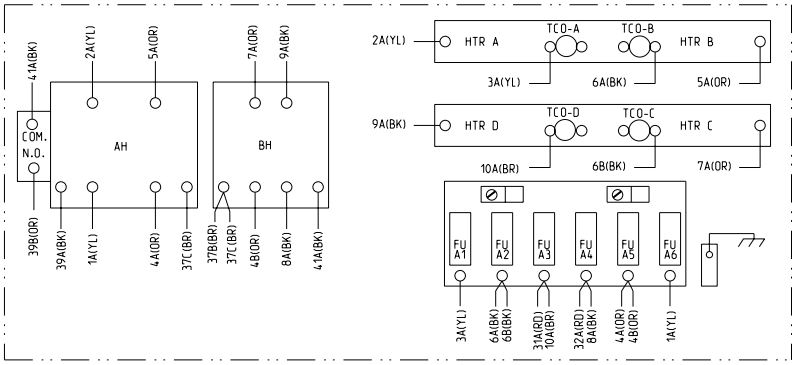

	FUSE SIZE
FU-A1	30A
FU-A2	60A
FU-A3	60A
FU-A4	60A
FU-A5	60A
FU-A6	30A

NOTES:

1. FIELD CONNECT CONTROL LEADS AS SHOWN:
   39A(BK)-LVTB W1 (FIRST STAGE HEAT)
   39B(OR)-LVTB W2 (SECOND STAGE HEAT)
   37B(BR)-LVTB J (HEATER/FAN INTERLOCK)
2. FOR SINGLE POWER ENTRY OPTION REMOVE CN-1 AND CN-2 FROM RED WIRES AND TERMINATE THESE WIRES AT THE AIR HANDLER CONTACTOR (F) AS SHOWN SEE THE HEATER INSTALLERS GUIDE AND AIR HANDLER WIRING DIAGRAM ON AIR HANDLER CONTROL BOX COVER FOR DETAILS.
3. BUSHING IS PROVIDED WITH HEATER.

CAUTION-NOT SUITABLE FOR USE ON SYSTEMS EXCEEDING 150 VOLTS TO GROUND.
ATTENTION: NE CONVIENT PAS POUR LES INSTALLATIONS DE PLUS DE 150V. À TERRE.

DEVICE	DESCRIPTION	LINE
AH	CONTACTOR,HEATER	13
BH	CONTACTOR,HEATER	12
CN	CONNECTOR,WIRE	
F	INDOOR FAN CONTACTOR	21
FU	FUSE	3-9
HTR	HEATER RACK	3-7
LVTB	LOW VOLTAGE TERMINAL BOARD	18,19
TCO	LIMIT CONTROL	3-7

WIRE COLOR DESIGNATION			
ABBR	COLOR	ABBR	COLOR
BK	BLACK	RD	RED
BL	BLUE	OR	ORANGE
BR	BROWN	YL	YELLOW

MODEL NO.	ELECTRICAL RATING			
	240 VOLTS		208 VOLTS	
	KW	AMPS	KW	AMPS
BAYHTRL123A	23.04	96	17.3	83.2

CAUTION

USE COPPER CONDUCTORS ONLY!

UNIT TERMINALS ARE NOT DESIGNED TO ACCEPT OTHER TYPES OF CONDUCTORS.

FAILURE TO DO SO MAY CAUSE DAMAGE TO THE EQUIPMENT.

ATTENTION

N'UTILISER QUE DES CONDUCTEURS EN CUIVRE!

LES BORNES DE L'UNITÉ NE SONT PAS CONÇUES POUR RECEVOIR D'AUTRES TYPES DE CONDUCTEURS.

L'UTILISATION DE TOUT AUTRE CONDUCTEUR PEUT ENDOMMAGER L'ÉQUIPEMENT.

PRECAUCIÓN

¡UTILICE ÚNICAMENTE CONDUCTORES DE COBRE!

LAS TERMINALES DE LA UNIDAD NO ESTÁN DISEÑADAS PARA ACEPTAR OTROS TIPOS DE CONDUCTORES.

SI NO LO HACE, PUEDE OCASIONAR DAÑO AL EQUIPO.

⚠ WARNING

HAZARDOUS VOLTAGE!

DISCONNECT ALL ELECTRIC POWER INCLUDING REMOTE DISCONNECTS AND FOLLOW LOCK OUT AND TAG PROCEDURES BEFORE SERVICING. INSURE THAT ALL MOTOR CAPACITORS HAVE DISCHARGED STORED VOLTAGE. UNITS WITH VARIABLE SPEED DRIVE, REFER TO DRIVE INSTRUCTIONS FOR CAPACITOR DISCHARGE.

FAILURE TO DO THE ABOVE BEFORE SERVICING COULD RESULT IN DEATH OR SERIOUS INJURY.

⚠ AVERTISSEMENT

TENSION DANGEREUSE!

COUPER TOUTES LES TENSIONS ET OUVRIR LES SECTIONNEURS À DISTANCE. PUIS SUIVRE LES PROCÉDURES DE VERROUILLAGE ET DES ÉTIQUETTES AVANT TOUTE INTERVENTION. VÉRIFIER QUE TOUS LES CONDENSATEURS DES MOTEURS SONT DÉCHARGÉS. DANS LE CAS D'UNITÉS COMPORTANT DES ENTRAÎNEMENTS À VITESSE VARAIBLE, SE REPORTER AUX INSTRUCTIONS DE L'ENTRAÎNEMENT POUR DÉCHARGER LES CONDENSATEURS.

NE PAS RESPECTER CES MESURES DE PRÉCAUTION PEUT ENTRAÎNER DES BLESSURES GRAVES POUVANT ÊTRE MORTELLES.

⚠ ADVERTENCIA

¡VOLTAJE PELIGROSO!

DESCONECTE TODA LA ENERGÍA ELÉCTRICA, INCLUSO LAS DESCONEXIONES REMOTAS Y SIGA LOS PROCEDIMIENTOS DE CIERRE Y ETIQUETADO ANTES DE PROCEDER AL SERVICIO. ASEGÚRESE DE QUE TODOS LOS CAPACITORES DEL MOTOR HAYAN DESCARGADO EL VOLTAJE ALMACENADO. PARA LAS UNIDADES CON EJE DE DIRECCIÓN DE VELOCIDAD VARIABLE, CONSULTE LAS INSTRUCCIONES PARA LA DESCARGA DEL CONDENSADOR.

EL NO REALIZAR LO ANTERIORMENTE INDICADO, PODRÍA OCASIONAR LA MUERTE O SERIAS LESIONES PERSONALES.

Figure 11. Wiring Diagram for BAYHTRL123A

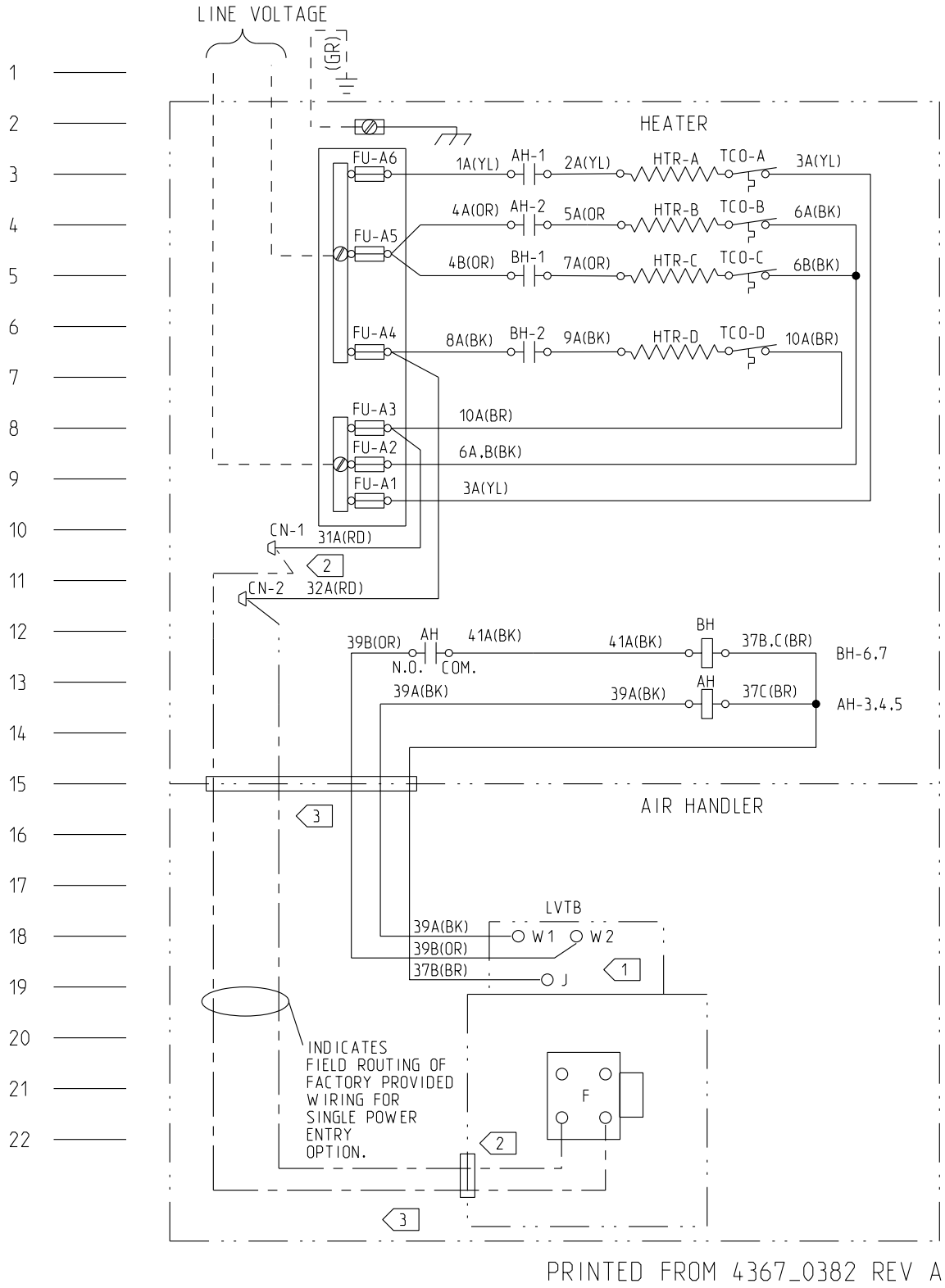

Figure 12. Wiring Diagram for BAYHTRL123A (continued)

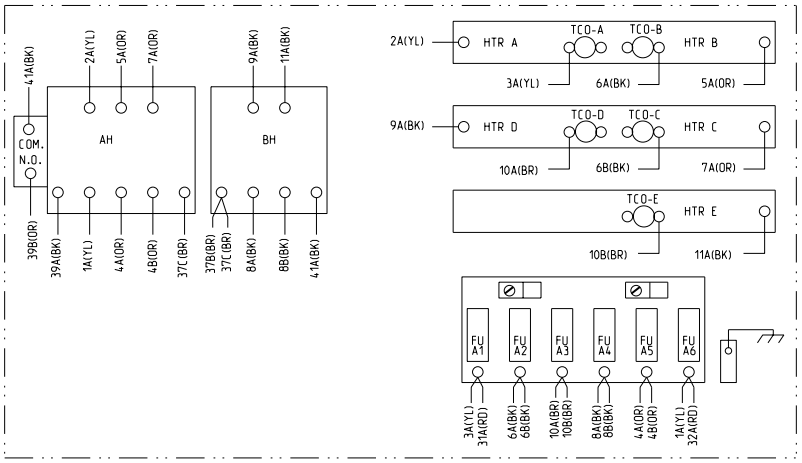

	FUSE SIZE
FU-A1	60A
FU-A2	60A
FU-A3	60A
FU-A4	60A
FU-A5	60A
FU-A6	60A

NOTES:

1. FIELD CONNECT CONTROL LEADS AS SHOWN:
   39A(BK)-LVTB W1 (FIRST STAGE HEAT)
   39B(OR)-LVTB W2 (SECOND STAGE HEAT)
   37B(BR)-LVTB J (HEATER/FAN INTERLOCK)
2. FOR SINGLE POWER ENTRY OPTION REMOVE CN-1 AND CN-2 FROM RED WIRES AND TERMINATE THESE WIRES AT THE AIR HANDLER CONTACTOR (F) AS SHOWN. SEE THE HEATER INSTALLERS GUIDE AND AIR HANDLER WIRING DIAGRAM ON AIR HANDLER CONTROL BOX COVER FOR DETAILS.
3. BUSHING IS PROVIDED WITH HEATER.

CAUTION-NOT SUITABLE FOR USE ON SYSTEMS EXCEEDING 150 VOLTS TO GROUND.
ATTENTION: NE CONVIENT PAS POUR LES INSTALLATIONS DE PLUS DE 150V. A TERRE.

DEVICE	DESCRIPTION	LINE
AH	CONTACTOR,HEATER	13
BH	CONTACTOR,HEATER	12
CN	CONNECTOR,WIRE	
F	INDOOR FAN CONTACTOR	21
FU	FUSE	3-9
HTR	HEATER RACK	3-7
LVTB	LOW VOLTAGE TERMINAL BOARD	18,19
TCO	LIMIT CONTROL	3-7

WIRE COLOR DESIGNATION			
ABBR	COLOR	ABBR	COLOR
BK	BLACK	RD	RED
BL	BLUE	OR	ORANGE
BR	BROWN	YL	YELLOW

MODEL NO.	ELECTRICAL RATING			
	240 VOLTS		208 VOLTS	
	KW	AMPS	KW	AMPS
BAYHTRL129A	28.8	120	21.65	104

CAUTION

USE COPPER CONDUCTORS ONLY!

UNIT TERMINALS ARE NOT DESIGNED TO ACCEPT OTHER TYPES OF CONDUCTORS.

FAILURE TO DO SO MAY CAUSE DAMAGE TO THE EQUIPMENT.

ATTENTION

N'UTILISER QUE DES CONDUCTEURS EN CUIVRE!

LES BORNES DE L'UNITÉ NE SONT PAS CONÇUES POUR RECEVOIR D'AUTRES TYPES DE CONDUCTEURS.

L'UTILISATION DE TOUT AUTRE CONDUCTEUR PEUT ENDOMMAGER L'ÉQUIPEMENT.

PRECAUCIÓN

¡UTILICE ÚNICAMENTE CONDUCTORES DE COBRE!

LAS TERMINALES DE LA UNIDAD NO ESTÁN DISEÑADAS PARA ACEPTAR OTROS TIPOS DE CONDUCTORES.

SI NO LO HACE, PUEDE OCASIONAR DAÑO AL EQUIPO.

⚠ WARNING

HAZARDOUS VOLTAGE!

DISCONNECT ALL ELECTRIC POWER INCLUDING REMOTE DISCONNECTS AND FOLLOW LOCK OUT AND TAG PROCEDURES BEFORE SERVICING. INSURE THAT ALL MOTOR CAPACITORS HAVE DISCHARGED STORED VOLTAGE. UNITS WITH VARIABLE SPEED DRIVE, REFER TO DRIVE INSTRUCTIONS FOR CAPACITOR DISCHARGE.

FAILURE TO DO THE ABOVE BEFORE SERVICING COULD RESULT IN DEATH OR SERIOUS INJURY.

⚠ AVERTISSEMENT

TENSION DANGEREUSE!

COUPER TOUTES LES TENSIONS ET OUVRIR LES SECTIONNEURS À DISTANCE. PUIS SUIVRE LES PROCÉDURES DE VERROUILLAGE ET DES ÉTIQUETTES AVANT TOUTE INTERVENTION. VÉRIFIER QUE TOUS LES CONDENSATEURS DES MOTEURS SONT DÉCHARGÉS. DANS LE CAS D'UNITÉS COMPORTANT DES ENTRAÎNEMENTS À VITESSE VARAIBLE, SE REPORTER AUX INSTRUCTIONS DE L'ENTRAÎNEMENT POUR DÉCHARGER LES CONDENSATEURS.

NE PAS RESPECTER CES MESURES DE PRÉCAUTION PEUT ENTRAÎNER DES BLESSURES GRAVES POUVANT ÊTRE MORTELLES.

⚠ ADVERTENCIA

¡VOLTAJE PELIGROSO!

DESCONECTE TODA LA ENERGÍA ELÉCTRICA, INCLUSO LAS DESCONEXIONES REMOTAS Y SIGA LOS PROCEDIMIENTOS DE CIERRE Y ETIQUETADO ANTES DE PROCEDER AL SERVICIO. ASEGÚRESE DE QUE TODOS LOS CAPACITORES DEL MOTOR HAYAN DESCARGADO EL VOLTAJE ALMACENADO. PARA LAS UNIDADES CON EJE DE DIRECCIÓN DE VELOCIDAD VARIABLE, CONSULTE LAS INSTRUCCIONES PARA LA DESCARGA DEL CONDENSADOR.

EL NO REALIZAR LO ANTERIORMENTE INDICADO, PODRÍA OCASIONAR LA MUERTE O SERIAS LESIONES PERSONALES.

Figure 5. Wiring Diagram for BAYHTRL129A

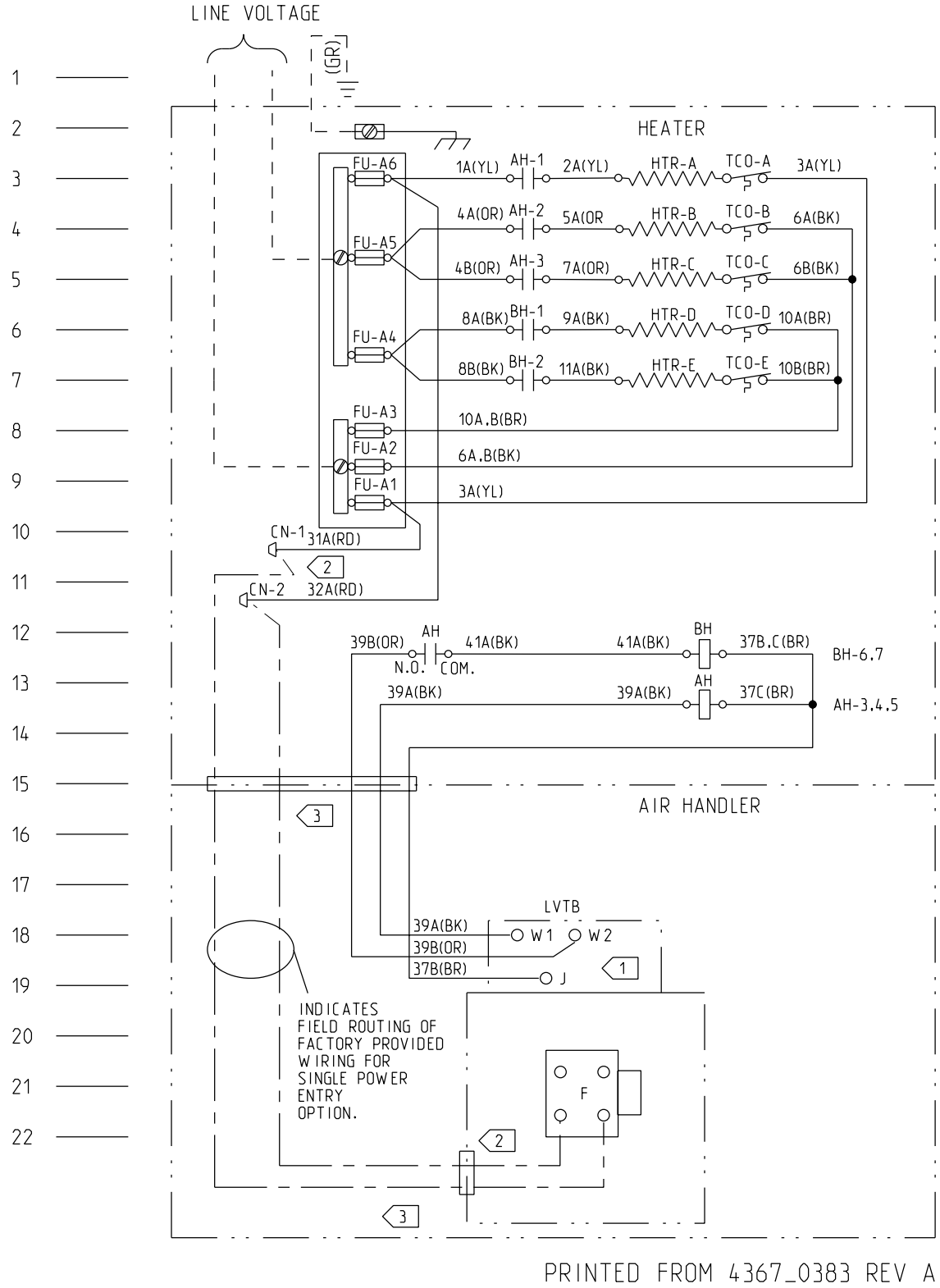

Figure 5. Wiring Diagram for BAYHTRL129A

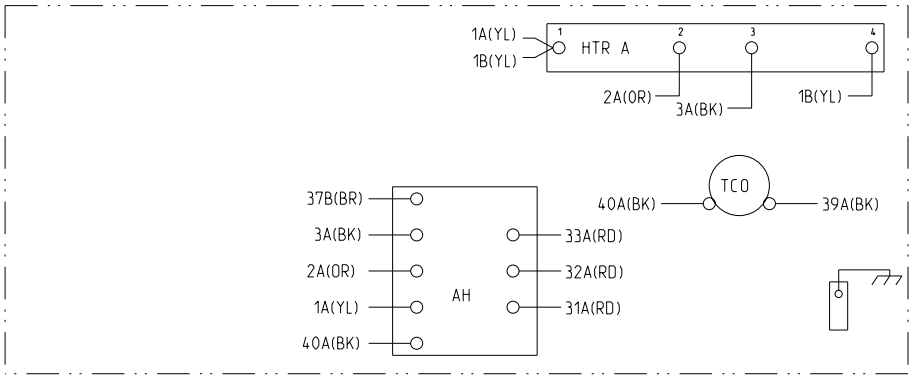

NOTES:
1. FIELD CONNECT CONTROL LEADS AS SHOWN:
   39A(BK)-LVTB W1 (FIRST STAGE HEAT)
   37B(BR)-LVTB J (HEATER/FAN INTERLOCK)
2. FOR SINGLE POWER ENTRY OPTION REMOVE CN-1 ,CN-2, AND CN-3 FROM RED WIRES AND TERMINATE THESE WIRES AT THE AIR HANDLER CONTACTOR (F) AS SHOWN. SEE THE HEATER INSTALLERS GUIDE AND AIR HANDLER WIRING DIAGRAM ON AIR HANDLER CONTROL BOX COVER FOR DETAILS.
3. BUSHING IS PROVIDED WITH HEATER.

DEVICE	DESCRIPTION	LINE
AH	CONTACTOR,HEATER	15
CN	CONNECTOR,WIRE	12-14
F	AIR HANDLER CONTACTOR	21
FL	FUSE LINK	6-8
HTR	HEATER RACK	7
LVTB	LOW VOLTAGE TERMINAL BOARD	18
TCO	THERMOSTAT	15

WIRE COLOR DESIGNATION			
ABBR	COLOR	ABBR	COLOR
BK	BLACK	RD	RED
BL	BLUE	OR	ORANGE
BR	BROWN	YL	YELLOW

MODEL NO.	ELECTRICAL RATING			
	240 VOLTS		208 VOLTS	
	KW	AMPS	KW	AMPS
BAYHTRL305A	5.00	12	3.75	10.4
BAYHTRL310A	9.96	24	7.48	20.8

CAUTION

USE COPPER CONDUCTORS ONLY!

UNIT TERMINALS ARE NOT DESIGNED TO ACCEPT OTHER TYPES OF CONDUCTORS.

FAILURE TO DO SO MAY CAUSE DAMAGE TO THE EQUIPMENT.

ATTENTION

N'UTILISER QUE DES CONDUCTEURS EN CUIVRE!

LES BORNES DE L'UNITÉ NE SONT PAS CONÇUES POUR RECEVOIR D'AUTRES TYPES DE CONDUCTEURS.

L'UTILISATION DE TOUT AUTRE CONDUCTEUR PEUT ENDOMMAGER L'ÉQUIPEMENT.

PRECAUCIÓN

¡UTILICE ÚNICAMENTE CONDUCTORES DE COBRE!

LAS TERMINALES DE LA UNIDAD NO ESTÁN DISEÑADAS PARA ACEPTAR OTROS TIPOS DE CONDUCTORES.

SI NO LO HACE, PUEDE OCASIONAR DAÑO AL EQUIPO.

⚠ WARNING

HAZARDOUS VOLTAGE!

DISCONNECT ALL ELECTRIC POWER INCLUDING REMOTE DISCONNECTS AND FOLLOW LOCK OUT AND TAG PROCEDURES BEFORE SERVICING. INSURE THAT ALL MOTOR CAPACITORS HAVE DISCHARGED STORED VOLTAGE. UNITS WITH VARIABLE SPEED DRIVE, REFER TO DRIVE INSTRUCTIONS FOR CAPACITOR DISCHARGE.

FAILURE TO DO THE ABOVE BEFORE SERVICING COULD RESULT IN DEATH OR SERIOUS INJURY.

⚠ AVERTISSEMENT

TENSION DANGEREUSE!

COUPER TOUTES LES TENSIONS ET OUVRIR LES SECTIONNEURS À DISTANCE. PUIS SUIVRE LES PROCÉDURES DE VERROUILLAGE ET DES ÉTIQUETTES AVANT TOUTE INTERVENTION. VÉRIFIER QUE TOUS LES CONDENSATEURS DES MOTEURS SONT DÉCHARGÉS. DANS LE CAS D'UNITÉS COMPORTANT DES ENTRAÎNEMENTS À VITESSE VARAIBLE, SE REPORTER AUX INSTRUCTIONS DE L'ENTRAÎNEMENT POUR DÉCHARGER LES CONDENSATEURS.

NE PAS RESPECTER CES MESURES DE PRÉCAUTION PEUT ENTRAÎNER DES BLESSURES GRAVES POUVANT ÊTRE MORTELLES.

⚠ ADVERTENCIA

¡VOLTAJE PELIGROSO!

DESCONECTE TODA LA ENERGÍA ELÉCTRICA. INCLUSO LAS DESCONEXIONES REMOTAS Y SIGA LOS PROCEDIMIENTOS DE CIERRE Y ETIQUETADO ANTES DE PROCEDER AL SERVICIO. ASEGÚRESE DE QUE TODOS LOS CAPACITORES DEL MOTOR HAYAN DESCARGADO EL VOLTAJE ALMACENADO. PARA LAS UNIDADES CON EJE DE DIRECCIÓN DE VELOCIDAD VARIABLE, CONSULTE LAS INSTRUCCIONES PARA LA DESCARGA DEL CONDENSADOR.

EL NO REALIZAR LO ANTERIORMENTE INDICADO, PODRÍA OCASIONAR LA MUERTE O SERIAS LESIONES PERSONALES.

Figure 13. Wiring Diagram for BAYHTRL305A/310A

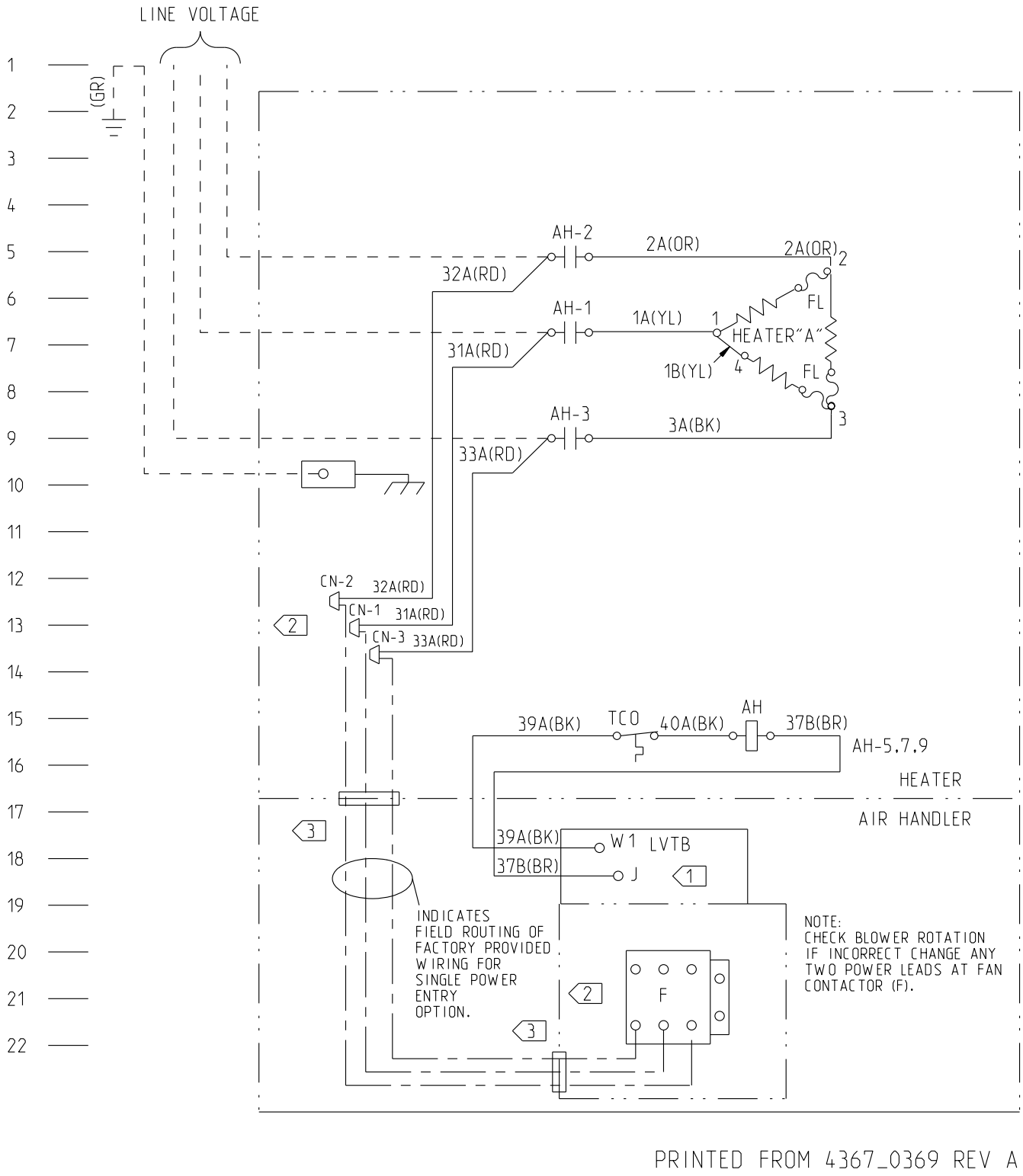

Figure 14. Wiring Diagram for BAYHTRL305A/310A (continued)

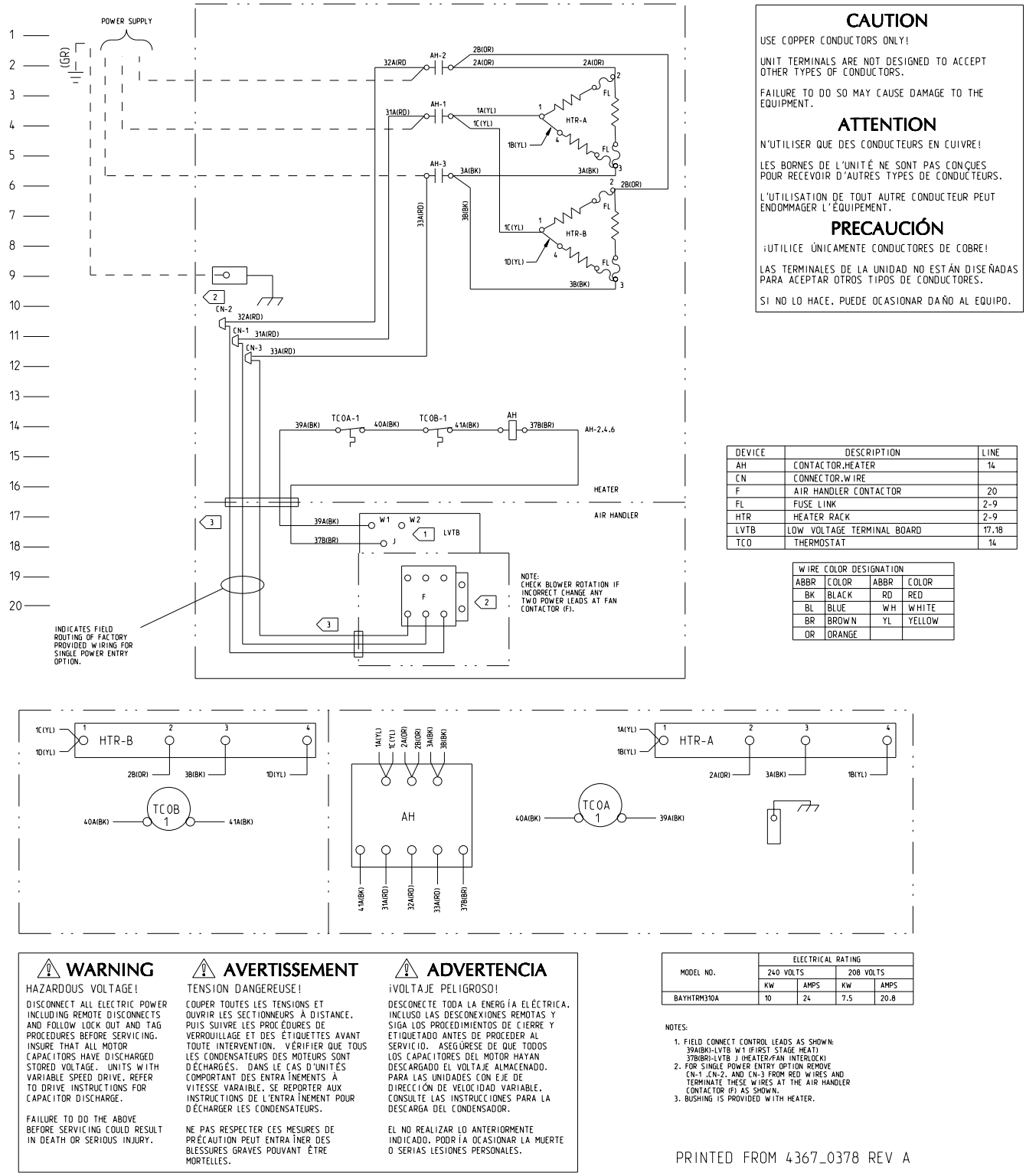

CAUTION

USE COPPER CONDUCTORS ONLY!

UNIT TERMINALS ARE NOT DESIGNED TO ACCEPT OTHER TYPES OF CONDUCTORS.

FAILURE TO DO SO MAY CAUSE DAMAGE TO THE EQUIPMENT.

ATTENTION

N'UTILISER QUE DES CONDUCTEURS EN CUIVRE!

LES BORNES DE L'UNITÉ NE SONT PAS CONÇUES POUR RECEVOIR D'AUTRES TYPES DE CONDUCTEURS.

L'UTILISATION DE TOUT AUTRE CONDUCTEUR PEUT ENDOMMAGER L'ÉQUIPEMENT.

PRECAUCIÓN

¡UTILICE ÚNICAMENTE CONDUCTORES DE COBRE!

LAS TERMINALES DE LA UNIDAD NO ESTÁN DISEÑADAS PARA ACEPTAR OTROS TIPOS DE CONDUCTORES.

SI NO LO HACE, PUEDE OCASIONAR DAÑO AL EQUIPO.

DEVICE	DESCRIPTION	LINE
AH	CONTACTOR,HEATER	14
CN	CONNECTOR,WIRE	
F	AIR HANDLER CONTACTOR	20
FL	FUSE LINK	2-9
HTR	HEATER RACK	2-9
LVTB	LOW VOLTAGE TERMINAL BOARD	17,18
TCO	THERMOSTAT	14

WIRE COLOR DESIGNATION			
ABBR	COLOR	ABBR	COLOR
BK	BLACK	RD	RED
BL	BLUE	WH	WHITE
BR	BROWN	YL	YELLOW
OR	ORANGE		

⚠ WARNING

HAZARDOUS VOLTAGE!

DISCONNECT ALL ELECTRIC POWER INCLUDING REMOTE DISCONNECTS AND FOLLOW LOCK OUT AND TAG PROCEDURES BEFORE SERVICING. INSURE THAT ALL MOTOR CAPACITORS HAVE DISCHARGED STORED VOLTAGE. UNITS WITH VARIABLE SPEED DRIVE, REFER TO DRIVE INSTRUCTIONS FOR CAPACITOR DISCHARGE.

FAILURE TO DO THE ABOVE BEFORE SERVICING COULD RESULT IN DEATH OR SERIOUS INJURY.

⚠ AVERTISSEMENT

TENSION DANGEREUSE!

COUPER TOUTES LES TENSIONS ET OUVRIR LES SECTIONNEURS À DISTANCE. PUIS SUIVRE LES PROCÉDURES DE VERROUILLAGE ET DES ÉTIQUETTES AVANT TOUTE INTERVENTION. VÉRIFIER QUE TOUS LES CONDENSATEURS DES MOTEURS SONT DÉCHARGÉS. DANS LE CAS D'UNITÉS COMPORTANT DES ENTRAÎNEMENTS À VITESSE VARIABLE, SE REPORTER AUX INSTRUCTIONS DE L'ENTRAÎNEMENT POUR DÉCHARGER LES CONDENSATEURS.

NE PAS RESPECTER CES MESURES DE PRÉCAUTION PEUT ENTRAÎNER DES BLESSURES GRAVES POUVANT ÊTRE MORTELLES.

⚠ ADVERTENCIA

¡VOLTAJE PELIGROSO!

DESCONECTE TODA LA ENERGÍA ELÉCTRICA, INCLUSO LAS DESCONEXIONES REMOTAS Y SIGA LOS PROCEDIMIENTOS DE CIERRE Y ETIQUETADO ANTES DE PROCEDER AL SERVICIO. ASEGÚRESE DE QUE TODOS LOS CAPACITORES DEL MOTOR HAYAN DESCARGADO EL VOLTAJE ALMACENADO. PARA LAS UNIDADES CON EJE DE DIRECCIÓN DE VELOCIDAD VARIABLE, CONSULTE LAS INSTRUCCIONES PARA LA DESCARGA DEL CONDENSADOR.

EL NO REALIZAR LO ANTERIORMENTE INDICADO, PODRÍA OCASIONAR LA MUERTE O SERIAS LESIONES PERSONALES.

MODEL NO.	ELECTRICAL RATING			
	240 VOLTS		208 VOLTS	
	KW	AMPS	KW	AMPS
BAYHTRM310A	10	24	7.5	20.8

NOTES:

1. FIELD CONNECT CONTROL LEADS AS SHOWN: 39A(BK)-LVTB W1 (FIRST STAGE HEAT) 37B(BR)-LVTB J (HEATER/FAN INTERLOCK)
2. FOR SINGLE POWER ENTRY OPTION REMOVE CN-1 ,CN-2, AND CN-3 FROM RED WIRES AND TERMINATE THESE WIRES AT THE AIR HANDLER CONTACTOR (F) AS SHOWN.
3. BUSHING IS PROVIDED WITH HEATER.

PRINTED FROM 4367_0378 REV A

Figure 15. Wiring Diagram for BAYHTRM310A

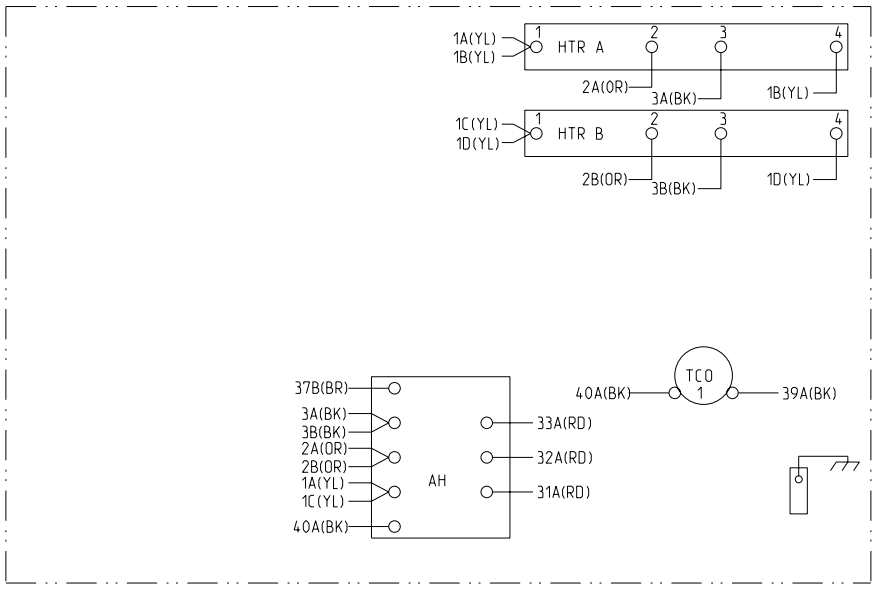

NOTES:

1. FIELD CONNECT CONTROL LEADS AS SHOWN:
   39A(BK)-LVTB W1 (FIRST STAGE HEAT)
   37B(BR)-LVTB J (HEATER/FAN INTERLOCK)
2. FOR SINGLE POWER ENTRY OPTION REMOVE CN-1 ,CN-2, AND CN-3 FROM RED WIRES AND TERMINATE THESE WIRES AT THE AIR HANDLER CONTACTOR (F) AS SHOWN. SEE THE HEATER INSTALLERS GUIDE AND AIR HANDLER WIRING DIAGRAM ON AIR HANDLER CONTROL BOX COVER FOR DETAILS.
3. BUSHING IS PROVIDED WITH HEATER.

DEVICE	DESCRIPTION	LINE
AH	CONTACTOR,HEATER	15
CN	CONNECTOR,WIRE	12-14
F	AIR HANDLER CONTACTOR	21
FL	FUSE LINK	6-12
HTR	HEATER RACK	7,11
LVTB	LOW VOLTAGE TERMINAL BOARD	18
TCO	THERMOSTAT	15

WIRE COLOR DESIGNATION			
ABBR	COLOR	ABBR	COLOR
BK	BLACK	RD	RED
BL	BLUE	OR	ORANGE
BR	BROWN	YL	YELLOW

MODEL NO.	ELECTRICAL RATING			
	240 VOLTS		208 VOLTS	
	KW	AMPS	KW	AMPS
BAYHTRL315A	14.96	36	11.25	31.2

CAUTION

USE COPPER CONDUCTORS ONLY!

UNIT TERMINALS ARE NOT DESIGNED TO ACCEPT OTHER TYPES OF CONDUCTORS.

FAILURE TO DO SO MAY CAUSE DAMAGE TO THE EQUIPMENT.

ATTENTION

N'UTILISER QUE DES CONDUCTEURS EN CUIVRE!

LES BORNES DE L'UNITÉ NE SONT PAS CONÇUES POUR RECEVOIR D'AUTRES TYPES DE CONDUCTEURS.

L'UTILISATION DE TOUT AUTRE CONDUCTEUR PEUT ENDOMMAGER L'ÉQUIPEMENT.

PRECAUCIÓN

¡UTILICE ÚNICAMENTE CONDUCTORES DE COBRE!

LAS TERMINALES DE LA UNIDAD NO ESTÁN DISEÑADAS PARA ACEPTAR OTROS TIPOS DE CONDUCTORES.

SI NO LO HACE, PUEDE OCASIONAR DAÑO AL EQUIPO.

⚠ WARNING

HAZARDOUS VOLTAGE!

DISCONNECT ALL ELECTRIC POWER INCLUDING REMOTE DISCONNECTS AND FOLLOW LOCK OUT AND TAG PROCEDURES BEFORE SERVICING. INSURE THAT ALL MOTOR CAPACITORS HAVE DISCHARGED STORED VOLTAGE. UNITS WITH VARIABLE SPEED DRIVE, REFER TO DRIVE INSTRUCTIONS FOR CAPACITOR DISCHARGE.

FAILURE TO DO THE ABOVE BEFORE SERVICING COULD RESULT IN DEATH OR SERIOUS INJURY.

⚠ AVERTISSEMENT

TENSION DANGEREUSE!

COUPER TOUTES LES TENSIONS ET OUVRIR LES SECTIONNEURS À DISTANCE, PUIS SUIVRE LES PROCÉDURES DE VERROUILLAGE ET DES ÉTIQUETTES AVANT TOUTE INTERVENTION. VÉRIFIER QUE TOUS LES CONDENSATEURS DES MOTEURS SONT DÉCHARGÉS. DANS LE CAS D'UNITÉS COMPORTANT DES ENTRAÎNEMENTS À VITESSE VARAIBLE, SE REPORTER AUX INSTRUCTIONS DE L'ENTRAÎNEMENT POUR DÉCHARGER LES CONDENSATEURS.

NE PAS RESPECTER CES MESURES DE PRÉCAUTION PEUT ENTRAÎNER DES BLESSURES GRAVES POUVANT ÊTRE MORTELLES.

⚠ ADVERTENCIA

¡VOLTAJE PELIGROSO!

DESCONECTE TODA LA ENERGÍA ELÉCTRICA, INCLUSO LAS DESCONEXIONES REMOTAS Y SIGA LOS PROCEDIMIENTOS DE CIERRE Y ETIQUETADO ANTES DE PROCEDER AL SERVICIO. ASEGÚRESE DE QUE TODOS LOS CAPACITORES DEL MOTOR HAYAN DESCARGADO EL VOLTAJE ALMACENADO. PARA LAS UNIDADES CON EJE DE DIRECCIÓN DE VELOCIDAD VARIABLE, CONSULTE LAS INSTRUCCIONES PARA LA DESCARGA DEL CONDENSADOR.

EL NO REALIZAR LO ANTERIORMENTE INDICADO, PODRÍA OCASIONAR LA MUERTE O SERIAS LESIONES PERSONALES.

Figure 16. Wiring Diagram for BAYHTRL315A

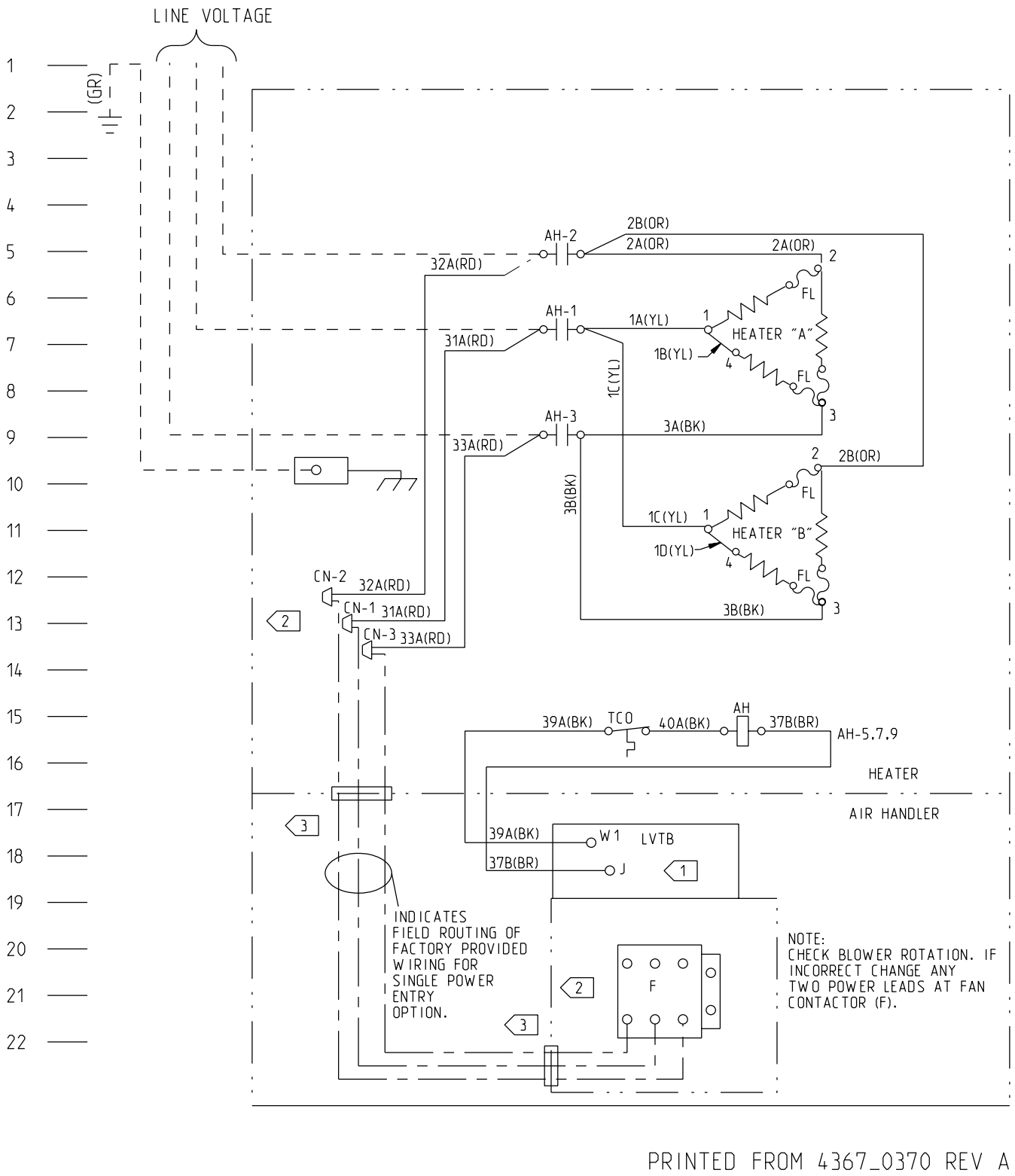

Figure 17. Wiring Diagram for BAYHTRL315A (continued)

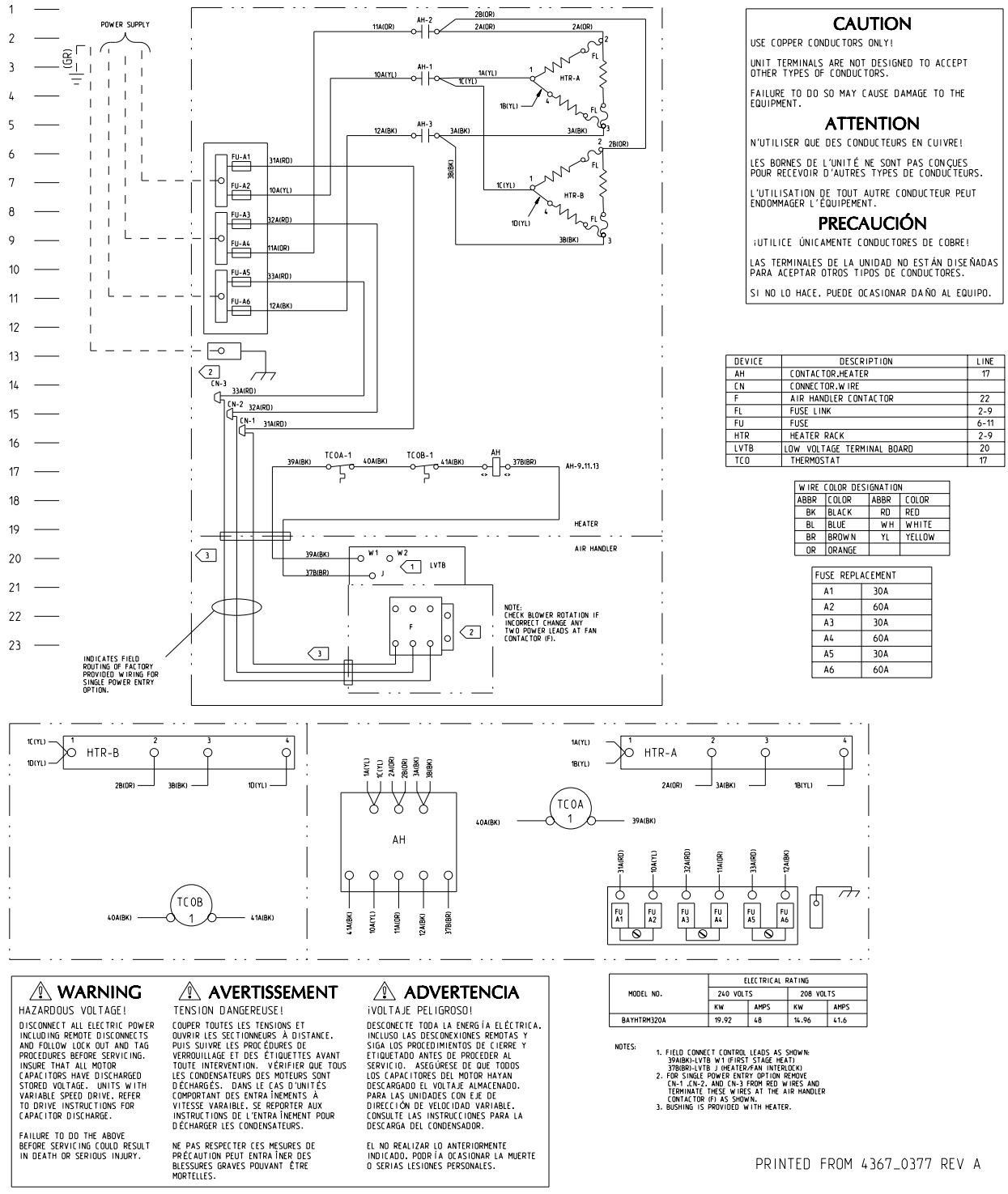

CAUTION

USE COPPER CONDUCTORS ONLY!

UNIT TERMINALS ARE NOT DESIGNED TO ACCEPT OTHER TYPES OF CONDUCTORS.

FAILURE TO DO SO MAY CAUSE DAMAGE TO THE EQUIPMENT.

ATTENTION

N'UTILISER QUE DES CONDUCTEURS EN CUIVRE!

LES BORNES DE L'UNITÉ NE SONT PAS CONÇUES POUR RECEVOIR D'AUTRES TYPES DE CONDUCTEURS.

L'UTILISATION DE TOUT AUTRE CONDUCTEUR PEUT ENDOMMAGER L'ÉQUIPEMENT.

PRECAUCIÓN

¡UTILICE ÚNICAMENTE CONDUCTORES DE COBRE!

LAS TERMINALES DE LA UNIDAD NO ESTÁN DISEÑADAS PARA ACEPTAR OTROS TIPOS DE CONDUCTORES.

SI NO LO HACE, PUEDE OCASIONAR DAÑO AL EQUIPO.

DEVICE	DESCRIPTION	LINE
AH	CONTACTOR,HEATER	17
CN	CONNECTOR,WIRE	
F	AIR HANDLER CONTACTOR	22
FL	FUSE LINK	2-9
FU	FUSE	6-11
HTR	HEATER RACK	2-9
LVTB	LOW VOLTAGE TERMINAL BOARD	20
TCO	THERMOSTAT	17

WIRE COLOR DESIGNATION			
ABBR	COLOR	ABBR	COLOR
BK	BLACK	RD	RED
BL	BLUE	WH	WHITE
BR	BROWN	YL	YELLOW
OR	ORANGE		

FUSE REPLACEMENT	
A1	30A
A2	60A
A3	30A
A4	60A
A5	30A
A6	60A

⚠ WARNING

HAZARDOUS VOLTAGE!

DISCONNECT ALL ELECTRIC POWER INCLUDING REMOTE DISCONNECTS AND FOLLOW LOCK OUT AND TAG PROCEDURES BEFORE SERVICING. INSURE THAT ALL MOTOR CAPACITORS HAVE DISCHARGED STORED VOLTAGE. UNITS WITH VARIABLE SPEED DRIVE, REFER TO DRIVE INSTRUCTIONS FOR CAPACITOR DISCHARGE.

FAILURE TO DO THE ABOVE BEFORE SERVICING COULD RESULT IN DEATH OR SERIOUS INJURY.

⚠ AVERTISSEMENT

TENSION DANGEREUSE!

COUPER TOUTES LES TENSIONS ET OUVRIR LES SECTIONNEURS À DISTANCE. PUIS SUIVRE LES PROCÉDURES DE VERROUILLAGE ET DES ÉTIQUETTES AVANT TOUTE INTERVENTION. VÉRIFIER QUE TOUS LES CONDENSATEURS DES MOTEURS SONT DÉCHARGÉS. DANS LE CAS D'UNITÉS COMPORTANT DES ENTRAÎNEMENTS À VITESSE VARIABLE, SE REPORTER AUX INSTRUCTIONS DE L'ENTRAÎNEMENT POUR DÉCHARGER LES CONDENSATEURS.

NE PAS RESPECTER CES MESURES DE PRÉCAUTION PEUT ENTRAÎNER DES BLESSURES GRAVES POUVANT ÊTRE MORTELLES.

⚠ ADVERTENCIA

¡VOLTAJE PELIGROSO!

DESCONECTE TODA LA ENERGÍA ELÉCTRICA, INCLUSO LAS DESCONEXIONES REMOTAS Y SIGA LOS PROCEDIMIENTOS DE CIERRE Y ETIQUETADO ANTES DE PROCEDER AL SERVICIO. ASEGÚRESE DE QUE TODOS LOS CAPACITORES DEL MOTOR HAYAN DESCARGADO EL VOLTAJE ALMACENADO. PARA LAS UNIDADES CON EJE DE DIRECCIÓN DE VELOCIDAD VARIABLE, CONSULTE LAS INSTRUCCIONES PARA LA DESCARGA DEL CONDENSADOR.

EL NO REALIZAR LO ANTERIORMENTE INDICADO, PODRÍA OCASIONAR LA MUERTE O SERIAS LESIONES PERSONALES.

MODEL NO.	ELECTRICAL RATING			
	240 VOLTS		208 VOLTS	
	KW	AMPS	KW	AMPS
BAYHTRM320A	19.92	48	14.96	41.6

NOTES:
1. FIELD CONNECT CONTROL LEADS AS SHOWN: 39A(BK)-LVTB W1 (FIRST STAGE HEAT) 37B(BR)-LVTB J (HEATER/FAN INTERLOCK)
2. FOR SINGLE POWER ENTRY OPTION REMOVE CN-1 ,CN-2, AND CN-3 FROM RED WIRES AND TERMINATE THESE WIRES AT THE AIR HANDLER CONTACTOR (F) AS SHOWN.
3. BUSHING IS PROVIDED WITH HEATER.

Figure 18. Wiring Diagram for BAYHTRM320A

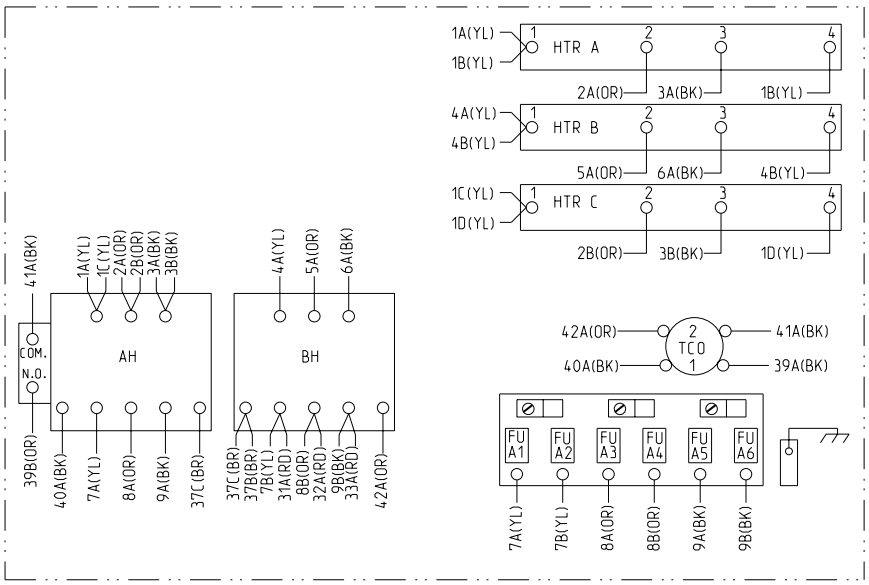

CAUTION

USE COPPER CONDUCTORS ONLY!

UNIT TERMINALS ARE NOT DESIGNED TO ACCEPT OTHER TYPES OF CONDUCTORS.

FAILURE TO DO SO MAY CAUSE DAMAGE TO THE EQUIPMENT.

ATTENTION

N'UTILISER QUE DES CONDUCTEURS EN CUIVRE!

LES BORNES DE L'UNITÉ NE SONT PAS CONÇUES POUR RECEVOIR D'AUTRES TYPES DE CONDUCTEURS.

L'UTILISATION DE TOUT AUTRE CONDUCTEUR PEUT ENDOMMAGER L'ÉQUIPEMENT.

PRECAUCIÓN

¡UTILICE ÚNICAMENTE CONDUCTORES DE COBRE!

LAS TERMINALES DE LA UNIDAD NO ESTÁN DISEÑADAS PARA ACEPTAR OTROS TIPOS DE CONDUCTORES.

SI NO LO HACE, PUEDE OCASIONAR DAÑO AL EQUIPO.

NOTES:

1. FIELD CONNECT CONTROL LEADS AS SHOWN:
   39A(BK)-LVTB W1 (FIRST STAGE HEAT)
   39B(OR)-LVTB W2 (SECOND STAGE HEAT)
   37B(BR)-LVTB J (HEATER/FAN INTERLOCK)
2. FOR SINGLE POWER ENTRY OPTION REMOVE CN-1 ,CN-2, AND CN-3 FROM RED WIRES AND TERMINATE THESE WIRES AT THE AIR HANDLER CONTACTOR (F) AS SHOWN. SEE THE HEATER INSTALLERS GUIDE AND AIR HANDLER WIRING DIAGRAM ON AIR HANDLER CONTROL BOX COVER FOR DETAILS.
3. BUSHING IS PROVIDED WITH HEATER.

DEVICE	DESCRIPTION	LINE
AH	CONTACTOR,HEATER	17
BH	CONTACTOR,HEATER	16
CN	CONNECTOR,WIRE	
F	AIR HANDLER CONTACTOR	21
FL	FUSE LINK	
FU	FUSE	6-11
HTR	HEATER RACK	
LVTB	LOW VOLTAGE TERMINAL BOARD	19
TCO	THERMOSTAT	16,17

	FUSE SIZE
FU-A1	60A
FU-A2	60A
FU-A3	60A
FU-A4	60A
FU-A5	60A
FU-A6	60A

WIRE COLOR DESIGNATION			
ABBR	COLOR	ABBR	COLOR
BK	BLACK	RD	RED
BL	BLUE	OR	ORANGE
BR	BROWN	YL	YELLOW

MODEL NO.	ELECTRICAL RATING			
	240 VOLTS		208 VOLTS	
	KW	AMPS	KW	AMPS
BAYHTRL325A	24.92	60	18.7	52

⚠ WARNING

HAZARDOUS VOLTAGE!

DISCONNECT ALL ELECTRIC POWER INCLUDING REMOTE DISCONNECTS AND FOLLOW LOCK OUT AND TAG PROCEDURES BEFORE SERVICING. INSURE THAT ALL MOTOR CAPACITORS HAVE DISCHARGED STORED VOLTAGE. UNITS WITH VARIABLE SPEED DRIVE, REFER TO DRIVE INSTRUCTIONS FOR CAPACITOR DISCHARGE.

FAILURE TO DO THE ABOVE BEFORE SERVICING COULD RESULT IN DEATH OR SERIOUS INJURY.

⚠ AVERTISSEMENT

TENSION DANGEREUSE!

COUPER TOUTES LES TENSIONS ET OUVRIR LES SECTIONNEURS À DISTANCE. PUIS SUIVRE LES PROCÉDURES DE VERROUILLAGE ET DES ÉTIQUETTES AVANT TOUTE INTERVENTION. VÉRIFIER QUE TOUS LES CONDENSATEURS DES MOTEURS SONT DÉCHARGÉS. DANS LE CAS D'UNITÉS COMPORTANT DES ENTRAÎNEMENTS À VITESSE VARAIBLE, SE REPORTER AUX INSTRUCTIONS DE L'ENTRAÎNEMENT POUR DÉCHARGER LES CONDENSATEURS.

NE PAS RESPECTER CES MESURES DE PRÉCAUTION PEUT ENTRAÎNER DES BLESSURES GRAVES POUVANT ÊTRE MORTELLES.

⚠ ADVERTENCIA

¡VOLTAJE PELIGROSO!

DESCONECTE TODA LA ENERGÍA ELÉCTRICA, INCLUSO LAS DESCONEXIONES REMOTAS Y SIGA LOS PROCEDIMIENTOS DE CIERRE Y ETIQUETADO ANTES DE PROCEDER AL SERVICIO. ASEGÚRESE DE QUE TODOS LOS CAPACITORES DEL MOTOR HAYAN DESCARGADO EL VOLTAJE ALMACENADO. PARA LAS UNIDADES CON EJE DE DIRECCIÓN DE VELOCIDAD VARIABLE, CONSULTE LAS INSTRUCCIONES PARA LA DESCARGA DEL CONDENSADOR.

EL NO REALIZAR LO ANTERIORMENTE INDICADO, PODRÍA OCASIONAR LA MUERTE O SERIAS LESIONES PERSONALES.

Figure 19. Wiring Diagram for BAYHTRL325A

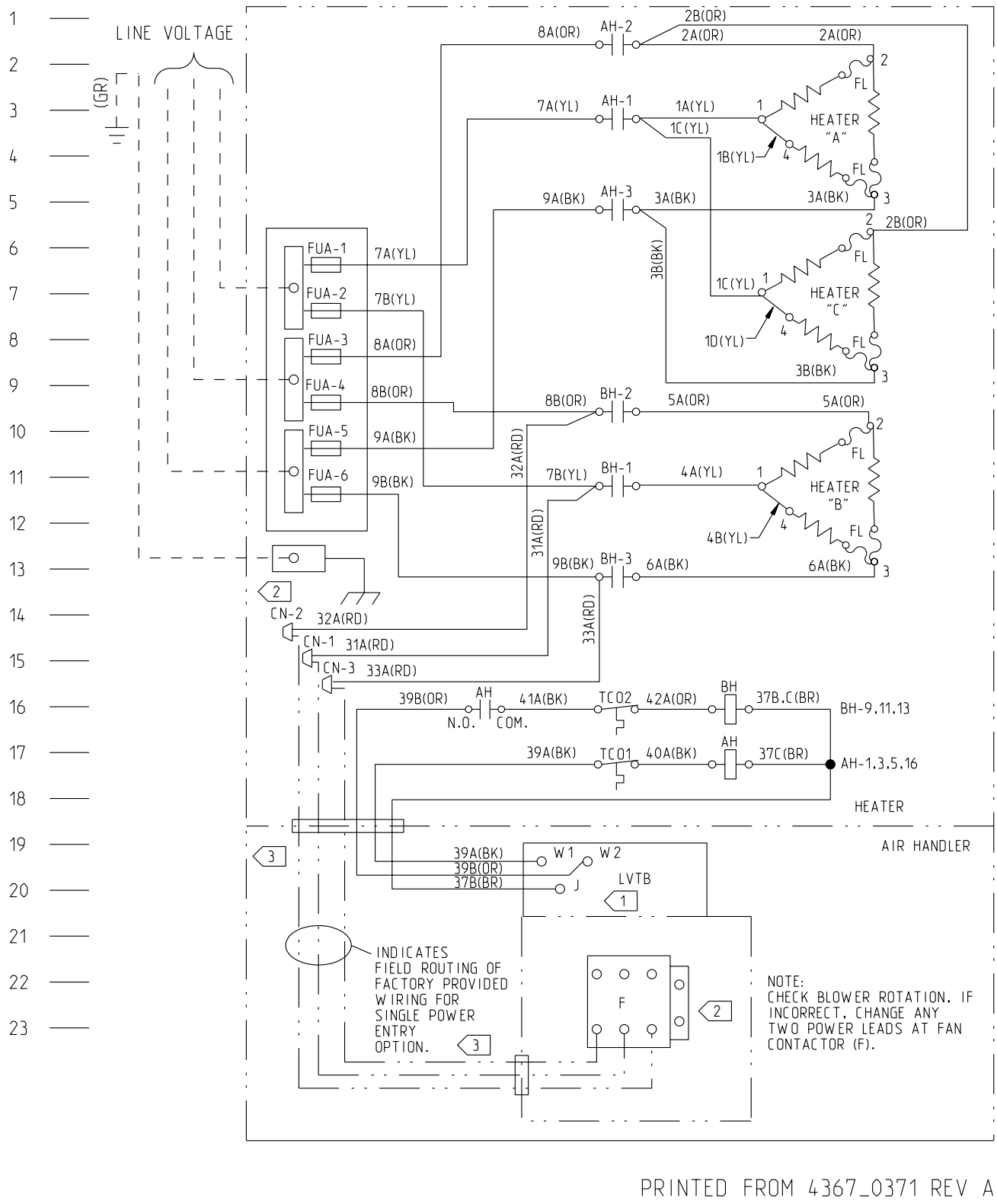

Figure 20. Wiring Diagram for BAYHTRL325A (continued)

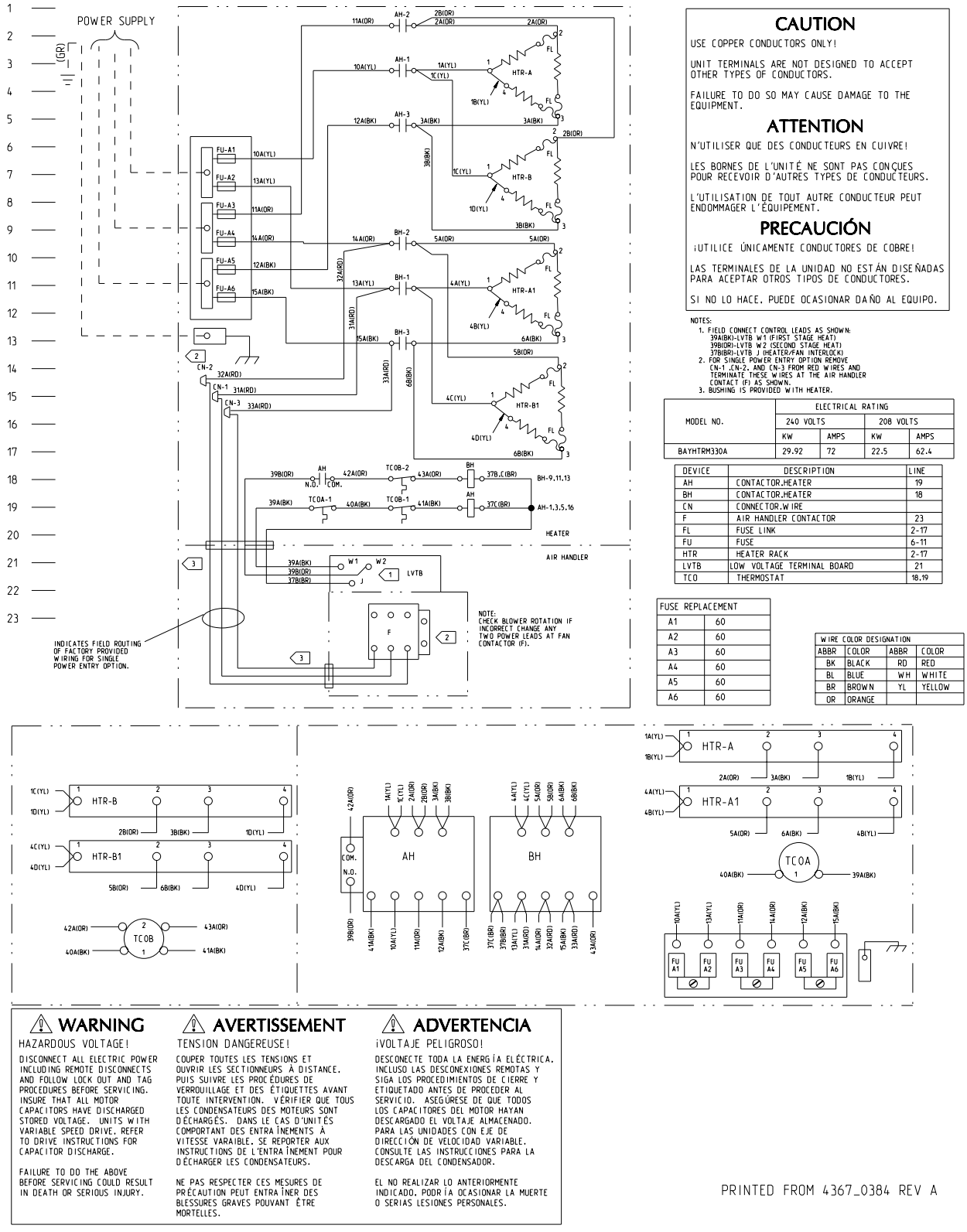

Figure 21. Wiring Diagram for BAYHTRM330A

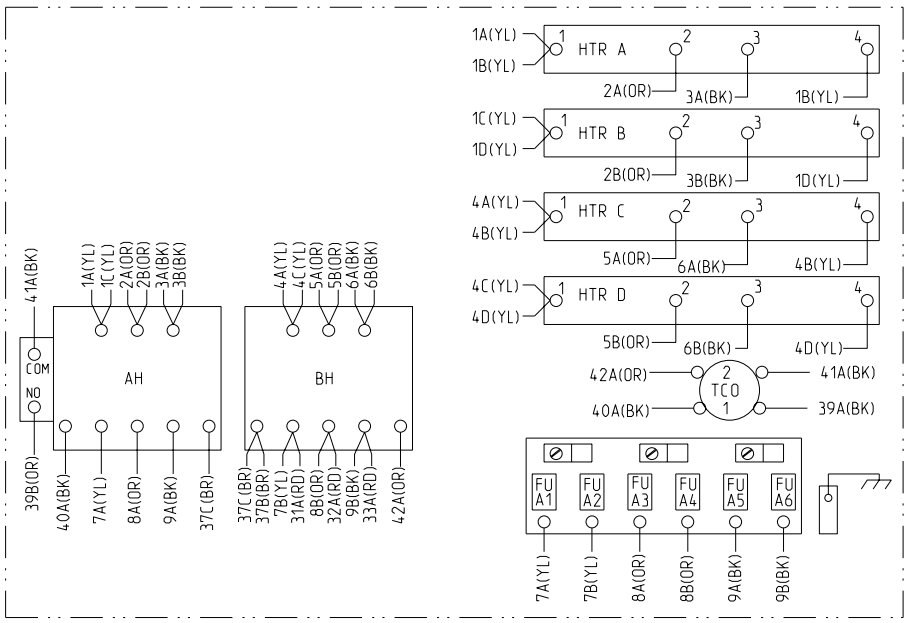

NOTES:

1. FIELD CONNECT CONTROL LEADS AS SHOWN:
   39A(BK)-LVTB W1 (FIRST STAGE HEAT)
   39B(OR)-LVTB W2 (SECOND STAGE HEAT)
   37B(BR)-LVTB J (HEATER/FAN INTERLOCK)
2. FOR SINGLE POWER ENTRY OPTION REMOVE CN-1 ,CN-2, AND CN-3 FROM RED WIRES AND TERMINATE THESE WIRES AT THE AIR HANDLER CONTACTOR (F) AS SHOWN. SEE THE HEATER INSTALLERS GUIDE AND AIR HANDLER WIRING DIAGRAM ON AIR HANDLER CONTROL BOX COVER FOR DETAILS.
3. BUSHING IS PROVIDED WITH HEATER.

DEVICE	DESCRIPTION	LINE
AH	CONTACTOR,HEATER	17
BH	CONTACTOR,HEATER	16
CN	CONNECTOR,WIRE	
F	AIR HANDLER CONTACTOR	22-23
FL	FUSE LINK	2-17
FU	FUSE	6-11
HTR	HEATER RACK	
LVTB	LOW VOLTAGE TERMINAL BOARD	20
TCO	THERMOSTAT	16,17

	FUSE SIZE
FU-A1	60A
FU-A2	60A
FU-A3	60A
FU-A4	60A
FU-A5	60A
FU-A6	60A

WIRE COLOR DESIGNATION			
ABBR	COLOR	ABBR	COLOR
BK	BLACK	RD	RED
BL	BLUE	OR	ORANGE
BR	BROWN	YL	YELLOW

MODEL NO.	ELECTRICAL RATING			
	240 VOLTS		208 VOLTS	
	KW	AMPS	KW	AMPS
BAYHTRL335A	34.88	84	26.20	72.8

CAUTION

USE COPPER CONDUCTORS ONLY!

UNIT TERMINALS ARE NOT DESIGNED TO ACCEPT OTHER TYPES OF CONDUCTORS.

FAILURE TO DO SO MAY CAUSE DAMAGE TO THE EQUIPMENT.

ATTENTION

N'UTILISER QUE DES CONDUCTEURS EN CUIVRE!

LES BORNES DE L'UNITÉ NE SONT PAS CONÇUES POUR RECEVOIR D'AUTRES TYPES DE CONDUCTEURS.

L'UTILISATION DE TOUT AUTRE CONDUCTEUR PEUT ENDOMMAGER L'ÉQUIPEMENT.

PRECAUCIÓN

¡UTILICE ÚNICAMENTE CONDUCTORES DE COBRE!

LAS TERMINALES DE LA UNIDAD NO ESTÁN DISEÑADAS PARA ACEPTAR OTROS TIPOS DE CONDUCTORES.

SI NO LO HACE, PUEDE OCASIONAR DAÑO AL EQUIPO.

⚠ WARNING

HAZARDOUS VOLTAGE!

DISCONNECT ALL ELECTRIC POWER INCLUDING REMOTE DISCONNECTS AND FOLLOW LOCK OUT AND TAG PROCEDURES BEFORE SERVICING. INSURE THAT ALL MOTOR CAPACITORS HAVE DISCHARGED STORED VOLTAGE. UNITS WITH VARIABLE SPEED DRIVE, REFER TO DRIVE INSTRUCTIONS FOR CAPACITOR DISCHARGE.

FAILURE TO DO THE ABOVE BEFORE SERVICING COULD RESULT IN DEATH OR SERIOUS INJURY.

⚠ AVERTISSEMENT

TENSION DANGEREUSE!

COUPER TOUTES LES TENSIONS ET OUVRIR LES SECTIONNEURS À DISTANCE, PUIS SUIVRE LES PROCÉDURES DE VERROUILLAGE ET DES ÉTIQUETTES AVANT TOUTE INTERVENTION. VÉRIFIER QUE TOUS LES CONDENSATEURS DES MOTEURS SONT DÉCHARGÉS. DANS LE CAS D'UNITÉS COMPORTANT DES ENTRAÎNEMENTS À VITESSE VARAIBLE, SE REPORTER AUX INSTRUCTIONS DE L'ENTRAÎNEMENT POUR DÉCHARGER LES CONDENSATEURS.

NE PAS RESPECTER CES MESURES DE PRÉCAUTION PEUT ENTRAÎNER DES BLESSURES GRAVES POUVANT ÊTRE MORTELLES.

⚠ ADVERTENCIA

¡VOLTAJE PELIGROSO!

DESCONECTE TODA LA ENERGÍA ELÉCTRICA, INCLUSO LAS DESCONEXIONES REMOTAS Y SIGA LOS PROCEDIMIENTOS DE CIERRE Y ETIQUETADO ANTES DE PROCEDER AL SERVICIO. ASEGÚRESE DE QUE TODOS LOS CAPACITORES DEL MOTOR HAYAN DESCARGADO EL VOLTAJE ALMACENADO. PARA LAS UNIDADES CON EJE DE DIRECCIÓN DE VELOCIDAD VARIABLE, CONSULTE LAS INSTRUCCIONES PARA LA DESCARGA DEL CONDENSADOR.

EL NO REALIZAR LO ANTERIORMENTE INDICADO, PODRÍA OCASIONAR LA MUERTE O SERIAS LESIONES PERSONALES.

Figure 22. Wiring Diagram for BAYHTRL335A

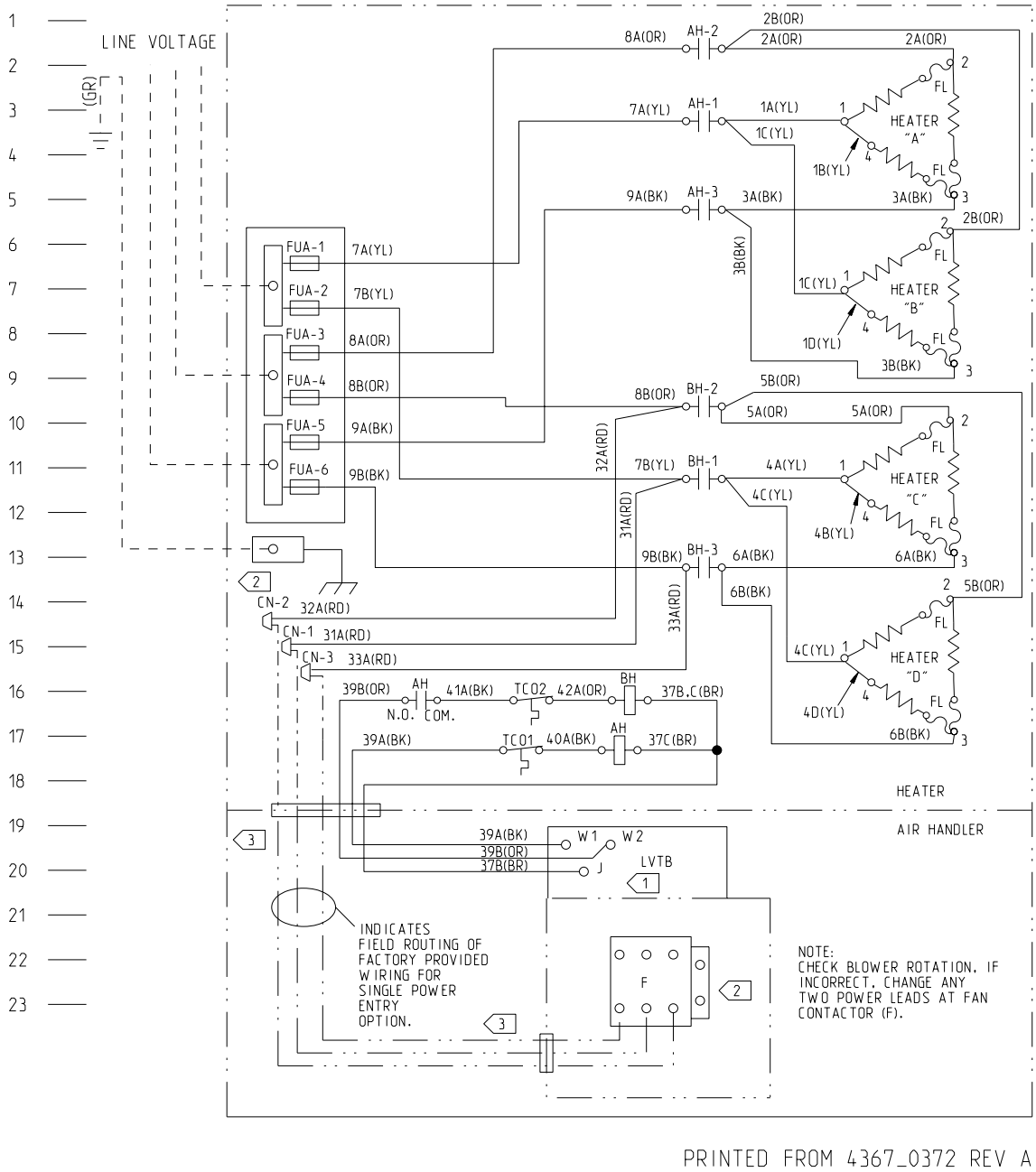

Figure 23. Wiring Diagram for BAYHTRL335A (continued)

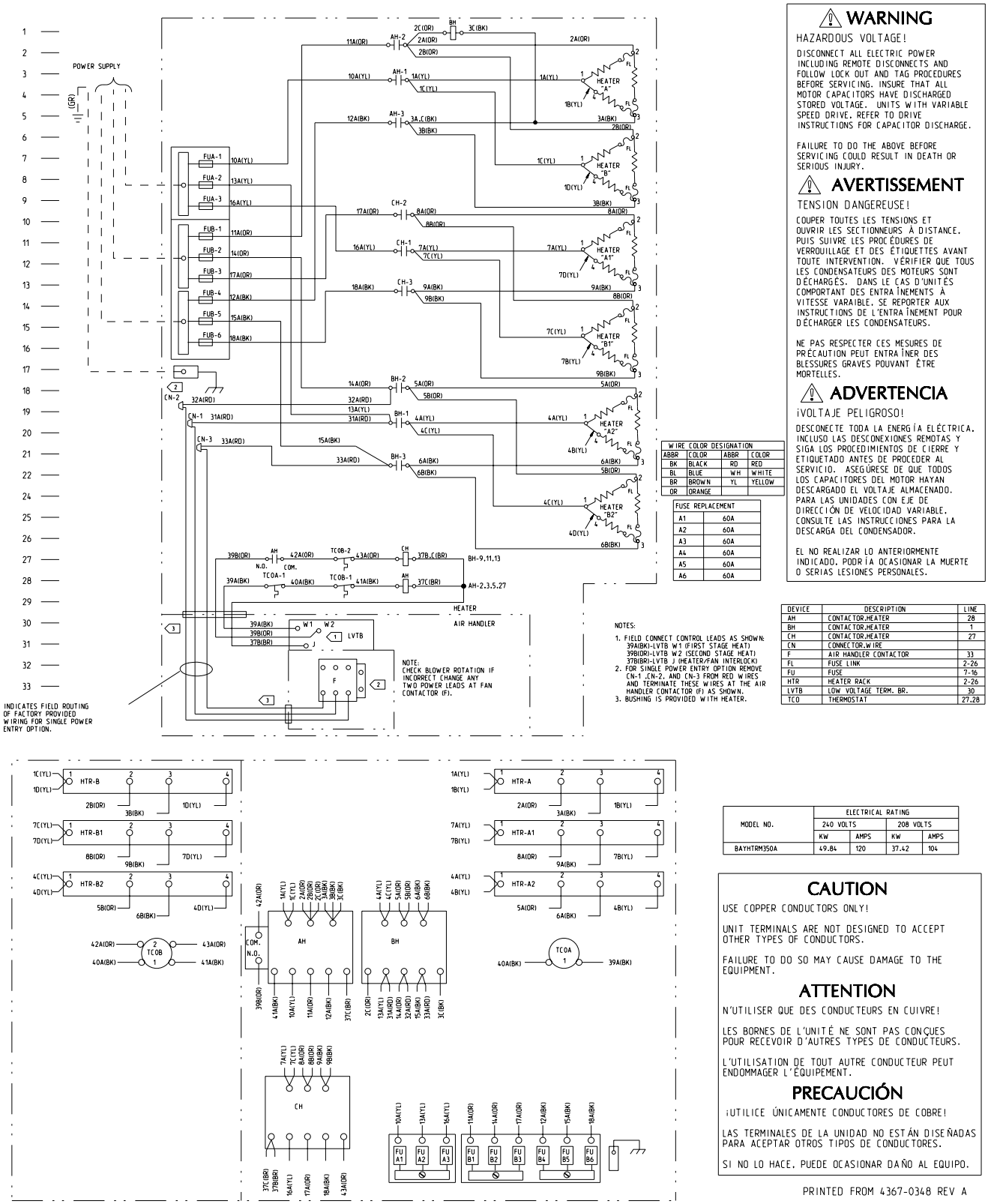

WIRE COLOR DESIGNATION			
ABBR	COLOR	ABBR	COLOR
BK	BLACK	RD	RED
BL	BLUE	WH	WHITE
BR	BROWN	YL	YELLOW
OR	ORANGE		

FUSE REPLACEMENT	
A1	60A
A2	60A
A3	60A
A4	60A
A5	60A
A6	60A

DEVICE	DESCRIPTION	LINE
AH	CONTACTOR,HEATER	28
BH	CONTACTOR,HEATER	1
CH	CONTACTOR,HEATER	27
CN	CONNECTOR,WIRE	
F	AIR HANDLER CONTACTOR	33
FL	FUSE LINK	2-26
FU	FUSE	7-16
HTR	HEATER RACK	2-26
LVTB	LOW VOLTAGE TERM. BR.	30
TCO	THERMOSTAT	27,28

MODEL NO.	ELECTRICAL RATING			
	240 VOLTS		208 VOLTS	
	KW	AMPS	KW	AMPS
BAYHTRM350A	49.84	120	37.42	104

Figure 24. Wiring Diagram for BAYHTRL350A

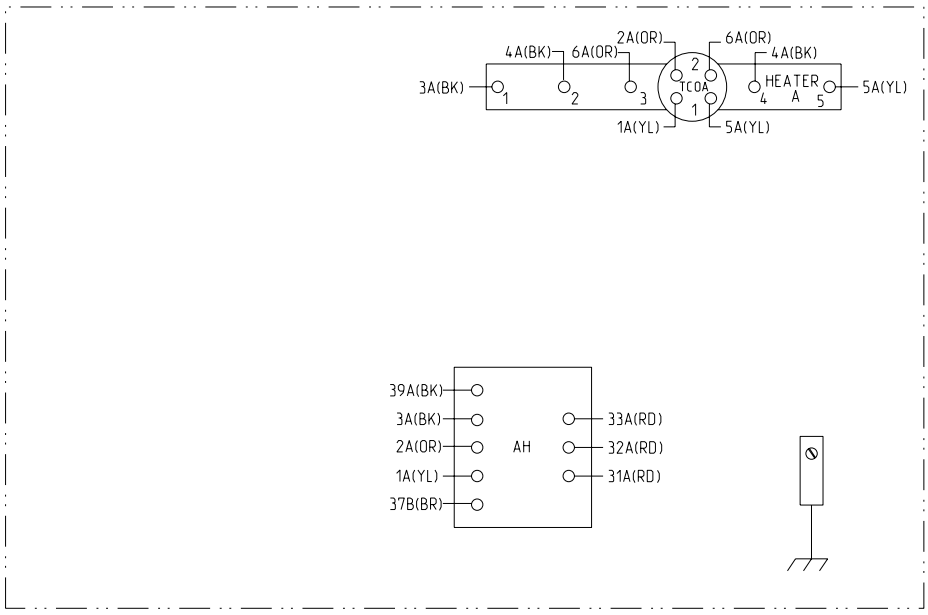

CAUTION

USE COPPER CONDUCTORS ONLY!

UNIT TERMINALS ARE NOT DESIGNED TO ACCEPT OTHER TYPES OF CONDUCTORS.

FAILURE TO DO SO MAY CAUSE DAMAGE TO THE EQUIPMENT.

ATTENTION

N'UTILISER QUE DES CONDUCTEURS EN CUIVRE!

LES BORNES DE L'UNITÉ NE SONT PAS CONÇUES POUR RECEVOIR D'AUTRES TYPES DE CONDUCTEURS.

L'UTILISATION DE TOUT AUTRE CONDUCTEUR PEUT ENDOMMAGER L'ÉQUIPEMENT.

PRECAUCIÓN

¡UTILICE ÚNICAMENTE CONDUCTORES DE COBRE!

LAS TERMINALES DE LA UNIDAD NO ESTÁN DISEÑADAS PARA ACEPTAR OTROS TIPOS DE CONDUCTORES.

SI NO LO HACE, PUEDE OCASIONAR DAÑO AL EQUIPO.

NOTES:

1. FIELD CONNECT CONTROL LEADS AS SHOWN:
   39A(BK)-LVTB W1 (FIRST STAGE HEAT)
   37B(BR)-LVTB J (HEATER/FAN INTERLOCK)
2. FOR SINGLE POWER ENTRY OPTION REMOVE CN-1, CN-2, AND CN-3 FROM RED WIRES AND TERMINATE THESE WIRES AT THE AIR HANDLER CONTACTOR (F) AS SHOWN. SEE THE HEATER INSTALLERS GUIDE AND AIR HANDLER WIRING DIAGRAM ON AIR HANDLER CONTROL BOX COVER FOR DETAILS.
3. BUSHING IS PROVIDED WITH HEATER.

DEVICE	DESCRIPTION	LINE
AH	CONTACTOR,HEATER	11
F	INDOOR FAN CONTACTOR	15
LVTB	LOW VOLTAGE TERMINAL	13,14
TCO_	TEMP. ACTUATED SWITCH	4-6
HTR	HEATER RACK	4-6

WIRE COLOR DESIGNATION			
ABBR	COLOR	ABBR	COLOR
BK	BLACK	RD	RED
BL	BLUE	OR	ORANGE
BR	BROWN	YL	YELLOW

MODEL NO.	ELECTRICAL RATING		
	VOLTS	KW	AMP
BAYHTRL405A	480	5.00	6
BAYHTRL410A	480	9.96	12
BAYHTRLW05A	600	5.00	5
BAYHTRLW10A	600	9.96	10

⚠ WARNING

HAZARDOUS VOLTAGE!

DISCONNECT ALL ELECTRIC POWER INCLUDING REMOTE DISCONNECTS AND FOLLOW LOCK OUT AND TAG PROCEDURES BEFORE SERVICING. INSURE THAT ALL MOTOR CAPACITORS HAVE DISCHARGED STORED VOLTAGE. UNITS WITH VARIABLE SPEED DRIVE, REFER TO DRIVE INSTRUCTIONS FOR CAPACITOR DISCHARGE.

FAILURE TO DO THE ABOVE BEFORE SERVICING COULD RESULT IN DEATH OR SERIOUS INJURY.

⚠ AVERTISSEMENT

TENSION DANGEREUSE!

COUPER TOUTES LES TENSIONS ET OUVRIR LES SECTIONNEURS À DISTANCE. PUIS SUIVRE LES PROCÉDURES DE VERROUILLAGE ET DES ÉTIQUETTES AVANT TOUTE INTERVENTION. VÉRIFIER QUE TOUS LES CONDENSATEURS DES MOTEURS SONT DÉCHARGÉS. DANS LE CAS D'UNITÉS COMPORTANT DES ENTRAÎNEMENTS À VITESSE VARIABLE, SE REPORTER AUX INSTRUCTIONS DE L'ENTRAÎNEMENT POUR DÉCHARGER LES CONDENSATEURS.

NE PAS RESPECTER CES MESURES DE PRÉCAUTION PEUT ENTRAÎNER DES BLESSURES GRAVES POUVANT ÊTRE MORTELLES.

⚠ ADVERTENCIA

¡VOLTAJE PELIGROSO!

DESCONECTE TODA LA ENERGÍA ELÉCTRICA, INCLUSO LAS DESCONEXIONES REMOTAS Y SIGA LOS PROCEDIMIENTOS DE CIERRE Y ETIQUETADO ANTES DE PROCEDER AL SERVICIO. ASEGÚRESE DE QUE TODOS LOS CAPACITORES DEL MOTOR HAYAN DESCARGADO EL VOLTAJE ALMACENADO. PARA LAS UNIDADES CON EJE DE DIRECCIÓN DE VELOCIDAD VARIABLE, CONSULTE LAS INSTRUCCIONES PARA LA DESCARGA DEL CONDENSADOR.

EL NO REALIZAR LO ANTERIORMENTE INDICADO, PODRÍA OCASIONAR LA MUERTE O SERIAS LESIONES PERSONALES.

Figure 5. Wiring Diagram for BAYHTRL405A/410A/W05A/W10A

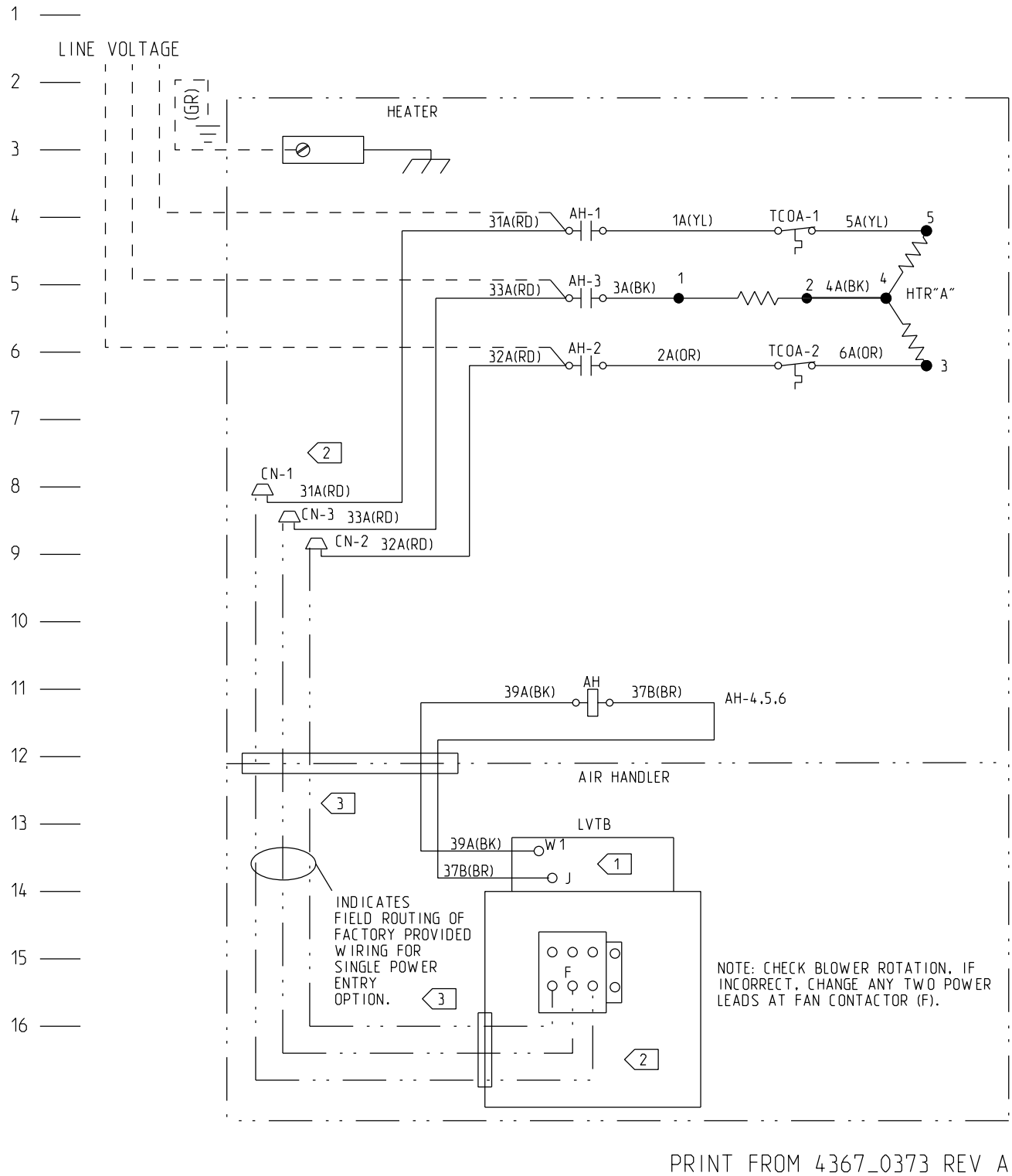

Figure 5. Wiring Diagram for BAYHTRL405A/410A/W05A/W10A

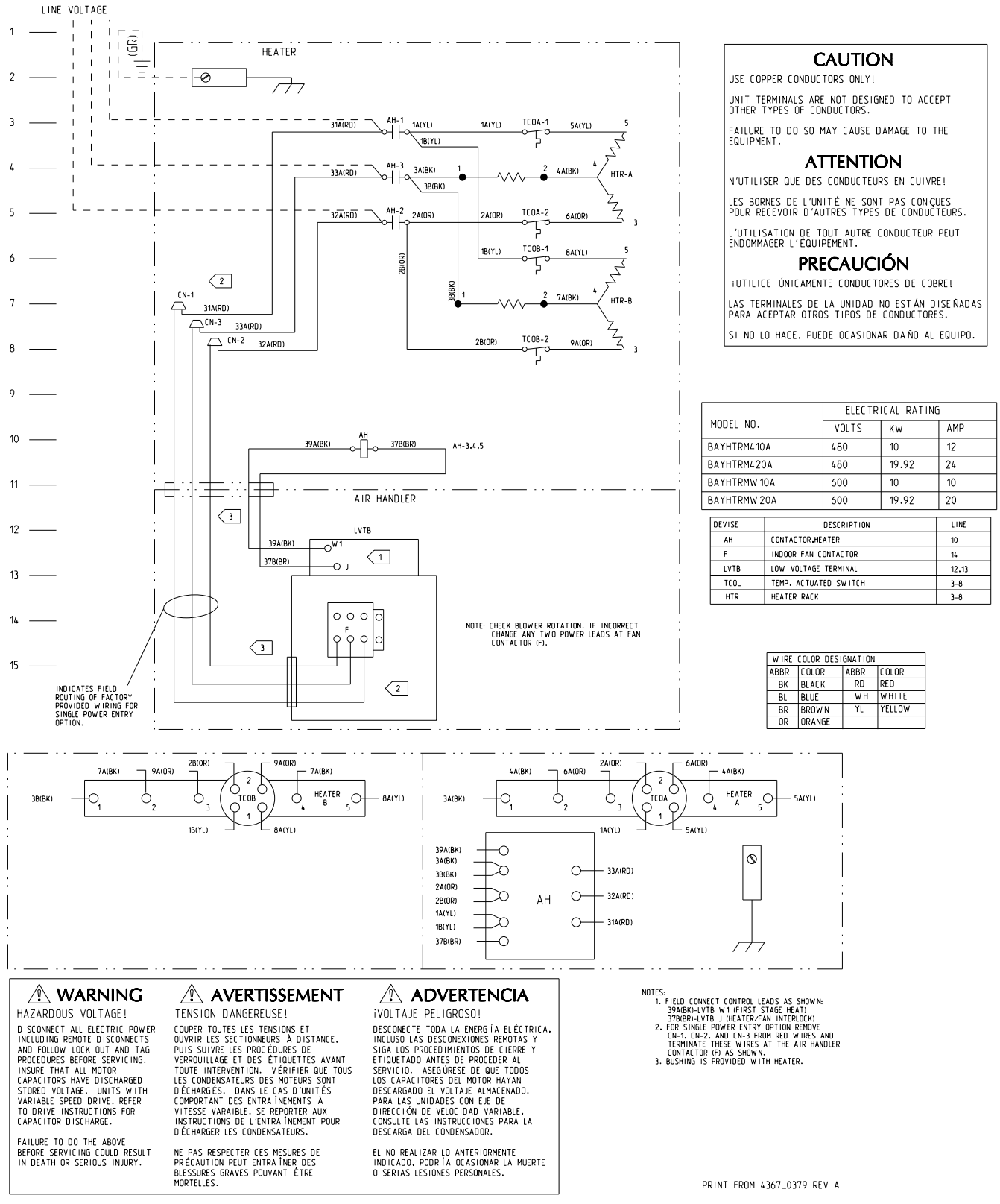

CAUTION

USE COPPER CONDUCTORS ONLY!

UNIT TERMINALS ARE NOT DESIGNED TO ACCEPT OTHER TYPES OF CONDUCTORS.

FAILURE TO DO SO MAY CAUSE DAMAGE TO THE EQUIPMENT.

ATTENTION

N'UTILISER QUE DES CONDUCTEURS EN CUIVRE!

LES BORNES DE L'UNITÉ NE SONT PAS CONÇUES POUR RECEVOIR D'AUTRES TYPES DE CONDUCTEURS.

L'UTILISATION DE TOUT AUTRE CONDUCTEUR PEUT ENDOMMAGER L'ÉQUIPEMENT.

PRECAUCIÓN

¡UTILICE ÚNICAMENTE CONDUCTORES DE COBRE!

LAS TERMINALES DE LA UNIDAD NO ESTÁN DISEÑADAS PARA ACEPTAR OTROS TIPOS DE CONDUCTORES.

SI NO LO HACE, PUEDE OCASIONAR DAÑO AL EQUIPO.

MODEL NO.	ELECTRICAL RATING		
	VOLTS	KW	AMP
BAYHTRM410A	480	10	12
BAYHTRM420A	480	19.92	24
BAYHTRMW10A	600	10	10
BAYHTRMW20A	600	19.92	20

DEVISE	DESCRIPTION	LINE
AH	CONTACTOR,HEATER	10
F	INDOOR FAN CONTACTOR	14
LVTB	LOW VOLTAGE TERMINAL	12,13
TCO_	TEMP. ACTUATED SWITCH	3-8
HTR	HEATER RACK	3-8

WIRE COLOR DESIGNATION			
ABBR	COLOR	ABBR	COLOR
BK	BLACK	RD	RED
BL	BLUE	WH	WHITE
BR	BROWN	YL	YELLOW
OR	ORANGE		

WARNING

HAZARDOUS VOLTAGE!

DISCONNECT ALL ELECTRIC POWER INCLUDING REMOTE DISCONNECTS AND FOLLOW LOCK OUT AND TAG PROCEDURES BEFORE SERVICING. INSURE THAT ALL MOTOR CAPACITORS HAVE DISCHARGED STORED VOLTAGE. UNITS WITH VARIABLE SPEED DRIVE, REFER TO DRIVE INSTRUCTIONS FOR CAPACITOR DISCHARGE.

FAILURE TO DO THE ABOVE BEFORE SERVICING COULD RESULT IN DEATH OR SERIOUS INJURY.

AVERTISSEMENT

TENSION DANGEREUSE!

COUPER TOUTES LES TENSIONS ET OUVRIR LES SECTIONNEURS À DISTANCE. PUIS SUIVRE LES PROCÉDURES DE VERROUILLAGE ET DES ÉTIQUETTES AVANT TOUTE INTERVENTION. VÉRIFIER QUE TOUS LES CONDENSATEURS DES MOTEURS SONT DÉCHARGÉS. DANS LE CAS D'UNITÉS COMPORTANT DES ENTRAÎNEMENTS À VITESSE VARAIBLE, SE REPORTER AUX INSTRUCTIONS DE L'ENTRAÎNEMENT POUR DÉCHARGER LES CONDENSATEURS.

NE PAS RESPECTER CES MESURES DE PRÉCAUTION PEUT ENTRAÎNER DES BLESSURES GRAVES POUVANT ÊTRE MORTELLES.

ADVERTENCIA

¡VOLTAJE PELIGROSO!

DESCONECTE TODA LA ENERGÍA ELÉCTRICA, INCLUSO LAS DESCONEXIONES REMOTAS Y SIGA LOS PROCEDIMIENTOS DE CIERRE Y ETIQUETADO ANTES DE PROCEDER AL SERVICIO. ASEGÚRESE DE QUE TODOS LOS CAPACITORES DEL MOTOR HAYAN DESCARGADO EL VOLTAJE ALMACENADO. PARA LAS UNIDADES CON EJE DE DIRECCIÓN DE VELOCIDAD VARIABLE, CONSULTE LAS INSTRUCCIONES PARA LA DESCARGA DEL CONDENSADOR.

EL NO REALIZAR LO ANTERIORMENTE INDICADO, PODRÍA OCASIONAR LA MUERTE O SERIAS LESIONES PERSONALES.

Figure 25. Wiring Diagram for BAYHTRM410A/420A/W10A/W20A

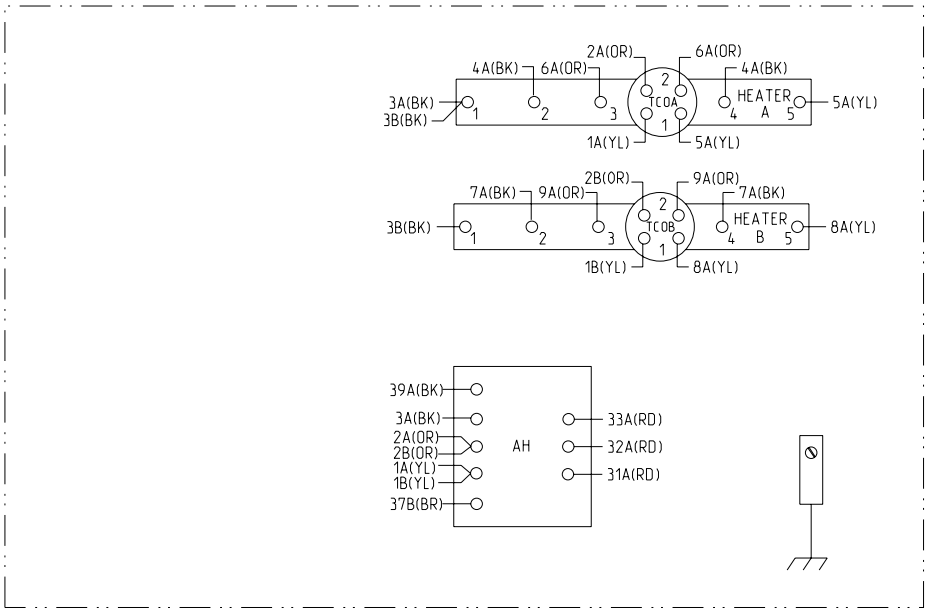

CAUTION

USE COPPER CONDUCTORS ONLY!

UNIT TERMINALS ARE NOT DESIGNED TO ACCEPT OTHER TYPES OF CONDUCTORS.

FAILURE TO DO SO MAY CAUSE DAMAGE TO THE EQUIPMENT.

ATTENTION

N'UTILISER QUE DES CONDUCTEURS EN CUIVRE!

LES BORNES DE L'UNITÉ NE SONT PAS CONÇUES POUR RECEVOIR D'AUTRES TYPES DE CONDUCTEURS.

L'UTILISATION DE TOUT AUTRE CONDUCTEUR PEUT ENDOMMAGER L'ÉQUIPEMENT.

PRECAUCIÓN

¡UTILICE ÚNICAMENTE CONDUCTORES DE COBRE!

LAS TERMINALES DE LA UNIDAD NO ESTÁN DISEÑADAS PARA ACEPTAR OTROS TIPOS DE CONDUCTORES.

SI NO LO HACE, PUEDE OCASIONAR DAÑO AL EQUIPO.

NOTES:

1. FIELD CONNECT CONTROL LEADS AS SHOWN:
   39A(BK)-LVTB W1 (FIRST STAGE HEAT)
   37B(BR)-LVTB J (HEATER/FAN INTERLOCK)
2. FOR SINGLE POWER ENTRY OPTION REMOVE CN-1, CN-2, AND CN-3 FROM RED WIRES AND TERMINATE THESE WIRES AT THE AIR HANDLER CONTACTOR (F) AS SHOWN. SEE THE HEATER INSTALLERS GUIDE AND AIR HANDLER WIRING DIAGRAM ON AIR HANDLER CONTROL BOX COVER FOR DETAILS.
3. BUSHING IS PROVIDED WITH HEATER.

DEVICE	DESCRIPTION	LINE
AH	CONTACTOR,HEATER	10
F	INDOOR FAN CONTACTOR	15
LVTB	LOW VOLTAGE TERMINAL	13
TCO_	TEMP. ACTUATED SWITCH	4-9
HTR	HEATER RACK	4-9

WIRE COLOR DESIGNATION			
ABBR	COLOR	ABBR	COLOR
BK	BLACK	RD	RED
BL	BLUE	OR	ORANGE
BR	BROWN	YL	YELLOW

MODEL NO.	ELECTRICAL RATING		
	VOLTS	KW	AMP
BAYHTRL415A	480	14.96	18
BAYHTRLW15A	600	14.96	15

⚠ WARNING

HAZARDOUS VOLTAGE!

DISCONNECT ALL ELECTRIC POWER INCLUDING REMOTE DISCONNECTS AND FOLLOW LOCK OUT AND TAG PROCEDURES BEFORE SERVICING. INSURE THAT ALL MOTOR CAPACITORS HAVE DISCHARGED STORED VOLTAGE. UNITS WITH VARIABLE SPEED DRIVE, REFER TO DRIVE INSTRUCTIONS FOR CAPACITOR DISCHARGE.

FAILURE TO DO THE ABOVE BEFORE SERVICING COULD RESULT IN DEATH OR SERIOUS INJURY.

⚠ AVERTISSEMENT

TENSION DANGEREUSE!

COUPER TOUTES LES TENSIONS ET OUVRIR LES SECTIONNEURS À DISTANCE, PUIS SUIVRE LES PROCÉDURES DE VERROUILLAGE ET DES ÉTIQUETTES AVANT TOUTE INTERVENTION. VÉRIFIER QUE TOUS LES CONDENSATEURS DES MOTEURS SONT DÉCHARGÉS. DANS LE CAS D'UNITÉS COMPORTANT DES ENTRAÎNEMENTS À VITESSE VARAIBLE, SE REPORTER AUX INSTRUCTIONS DE L'ENTRAÎNEMENT POUR DÉCHARGER LES CONDENSATEURS.

NE PAS RESPECTER CES MESURES DE PRÉCAUTION PEUT ENTRAÎNER DES BLESSURES GRAVES POUVANT ÊTRE MORTELLES.

⚠ ADVERTENCIA

¡VOLTAJE PELIGROSO!

DESCONECTE TODA LA ENERGÍA ELÉCTRICA, INCLUSO LAS DESCONEXIONES REMOTAS Y SIGA LOS PROCEDIMIENTOS DE CIERRE Y ETIQUETADO ANTES DE PROCEDER AL SERVICIO. ASEGÚRESE DE QUE TODOS LOS CAPACITORES DEL MOTOR HAYAN DESCARGADO EL VOLTAJE ALMACENADO. PARA LAS UNIDADES CON EJE DE DIRECCIÓN DE VELOCIDAD VARIABLE, CONSULTE LAS INSTRUCCIONES PARA LA DESCARGA DEL CONDENSADOR.

EL NO REALIZAR LO ANTERIORMENTE INDICADO, PODRÍA OCASIONAR LA MUERTE O SERIAS LESIONES PERSONALES.

Figure 26. Wiring Diagram for BAYHTRL415A/W15A

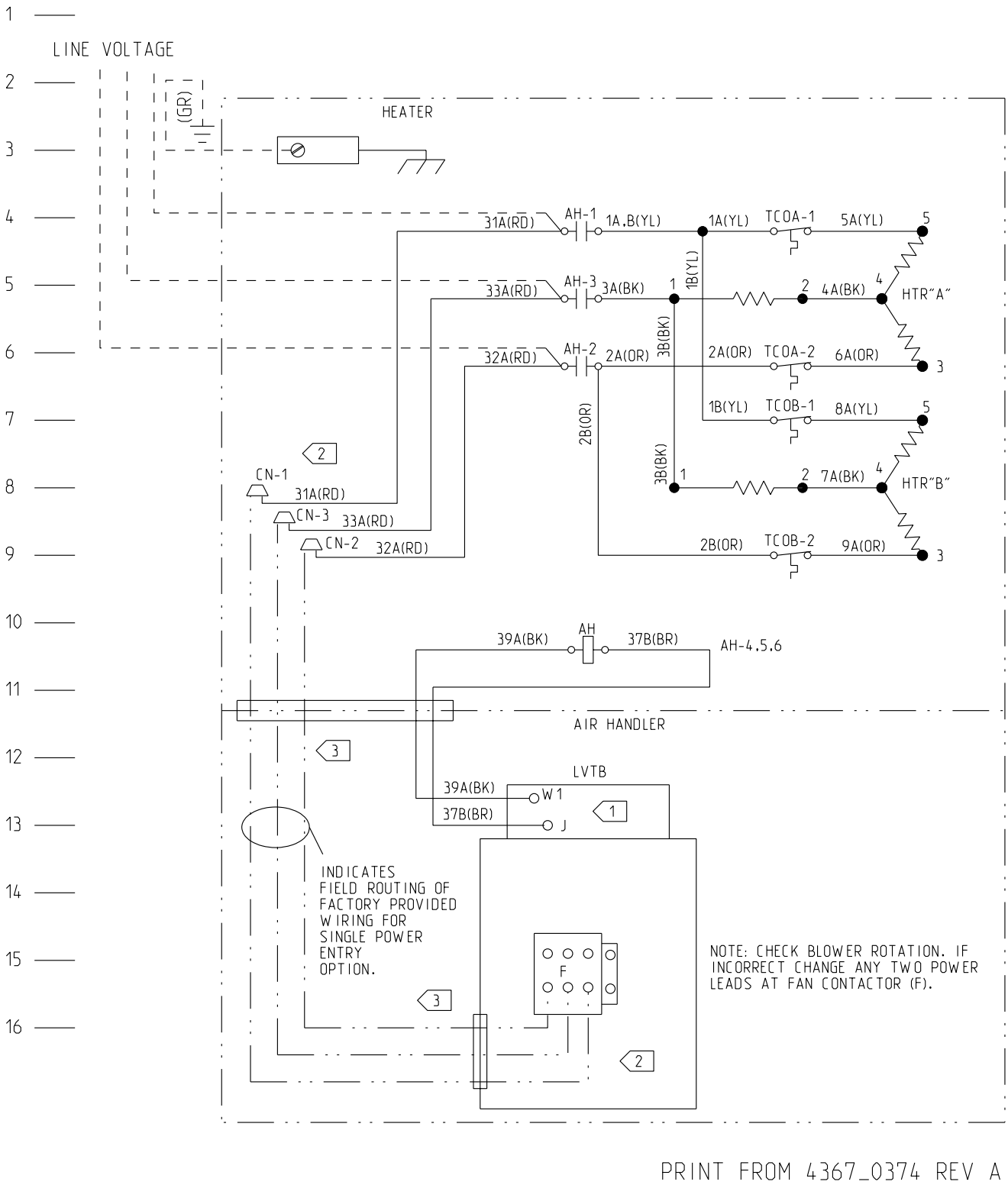

Figure 27. Wiring Diagram for BAYHTRL415A/W15A (continued)

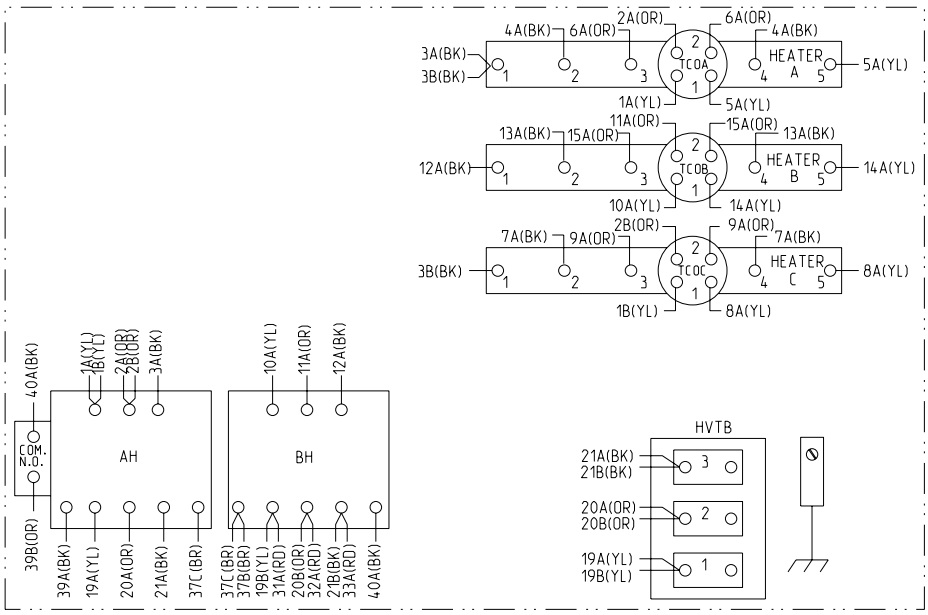

CAUTION

USE COPPER CONDUCTORS ONLY!

UNIT TERMINALS ARE NOT DESIGNED TO ACCEPT OTHER TYPES OF CONDUCTORS.

FAILURE TO DO SO MAY CAUSE DAMAGE TO THE EQUIPMENT.

ATTENTION

N'UTILISER QUE DES CONDUCTEURS EN CUIVRE!

LES BORNES DE L'UNITÉ NE SONT PAS CONÇUES POUR RECEVOIR D'AUTRES TYPES DE CONDUCTEURS.

L'UTILISATION DE TOUT AUTRE CONDUCTEUR PEUT ENDOMMAGER L'ÉQUIPEMENT.

PRECAUCIÓN

¡UTILICE ÚNICAMENTE CONDUCTORES DE COBRE!

LAS TERMINALES DE LA UNIDAD NO ESTÁN DISEÑADAS PARA ACEPTAR OTROS TIPOS DE CONDUCTORES.

SI NO LO HACE, PUEDE OCASIONAR DAÑO AL EQUIPO.

NOTES:

1. FIELD CONNECT CONTROL LEADS AS SHOWN:
   39A(BK)-LVTB W1 (FIRST STAGE HEAT)
   39B(OR)-LVTB W2 (SECOND STAGE HEAT)
   37B(BR)-LVTB J (HEATER/FAN INTERLOCK)
2. FOR SINGLE POWER ENTRY OPTION REMOVE CN-1, CN-2, AND CN-3 FROM RED WIRES AND TERMINATE THESE WIRES AT THE AIR HANDLER CONTACTOR (F) AS SHOWN. SEE THE HEATER INSTALLERS GUIDE AND AIR HANDLER WIRING DIAGRAM ON AIR HANDLER CONTROL BOX COVER FOR DETAILS.
3. BUSHING IS PROVIDED WITH HEATER.

DEVICE	DESCRIPTION	LINE
AH	CONTACTOR,HEATER	21
BH	CONTACTOR,HEATER	20
F	INDOOR FAN CONTACTOR	29
LVTB	LOW VOLTAGE TERMINAL	26
TCO_	TEMP. ACTUATED SWITCH	1-16
HVTB	HIGH VOLTAGE TERMINAL BLOCK	6-12
HTR	HEATER RACK	1-16

WIRE COLOR DESIGNATION			
ABBR	COLOR	ABBR	COLOR
BK	BLACK	RD	RED
BL	BLUE	OR	ORANGE
BR	BROWN	YL	YELLOW

MODEL NO.	ELECTRICAL RATING		
	VOLTS	KW	AMP
BAYHTRL425A	480	24.92	30
BAYHTRLW25A	600	24.92	25

⚠ WARNING

HAZARDOUS VOLTAGE!

DISCONNECT ALL ELECTRIC POWER INCLUDING REMOTE DISCONNECTS AND FOLLOW LOCK OUT AND TAG PROCEDURES BEFORE SERVICING. INSURE THAT ALL MOTOR CAPACITORS HAVE DISCHARGED STORED VOLTAGE. UNITS WITH VARIABLE SPEED DRIVE, REFER TO DRIVE INSTRUCTIONS FOR CAPACITOR DISCHARGE.

FAILURE TO DO THE ABOVE BEFORE SERVICING COULD RESULT IN DEATH OR SERIOUS INJURY.

⚠ AVERTISSEMENT

TENSION DANGEREUSE!

COUPER TOUTES LES TENSIONS ET OUVRIR LES SECTIONNEURS À DISTANCE, PUIS SUIVRE LES PROCÉDURES DE VERROUILLAGE ET DES ÉTIQUETTES AVANT TOUTE INTERVENTION. VÉRIFIER QUE TOUS LES CONDENSATEURS DES MOTEURS SONT DÉCHARGÉS. DANS LE CAS D'UNITÉS COMPORTANT DES ENTRAÎNEMENTS À VITESSE VARAIBLE, SE REPORTER AUX INSTRUCTIONS DE L'ENTRAÎNEMENT POUR DÉCHARGER LES CONDENSATEURS.

NE PAS RESPECTER CES MESURES DE PRÉCAUTION PEUT ENTRAÎNER DES BLESSURES GRAVES POUVANT ÊTRE MORTELLES.

⚠ ADVERTENCIA

¡VOLTAJE PELIGROSO!

DESCONECTE TODA LA ENERGÍA ELÉCTRICA, INCLUSO LAS DESCONEXIONES REMOTAS Y SIGA LOS PROCEDIMIENTOS DE CIERRE Y ETIQUETADO ANTES DE PROCEDER AL SERVICIO. ASEGÚRESE DE QUE TODOS LOS CAPACITORES DEL MOTOR HAYAN DESCARGADO EL VOLTAJE ALMACENADO. PARA LAS UNIDADES CON EJE DE DIRECCIÓN DE VELOCIDAD VARIABLE, CONSULTE LAS INSTRUCCIONES PARA LA DESCARGA DEL CONDENSADOR.

EL NO REALIZAR LO ANTERIORMENTE INDICADO, PODRÍA OCASIONAR LA MUERTE O SERIAS LESIONES PERSONALES.

Figure 28. Wiring Diagram for BAYHTRL425A/W25A

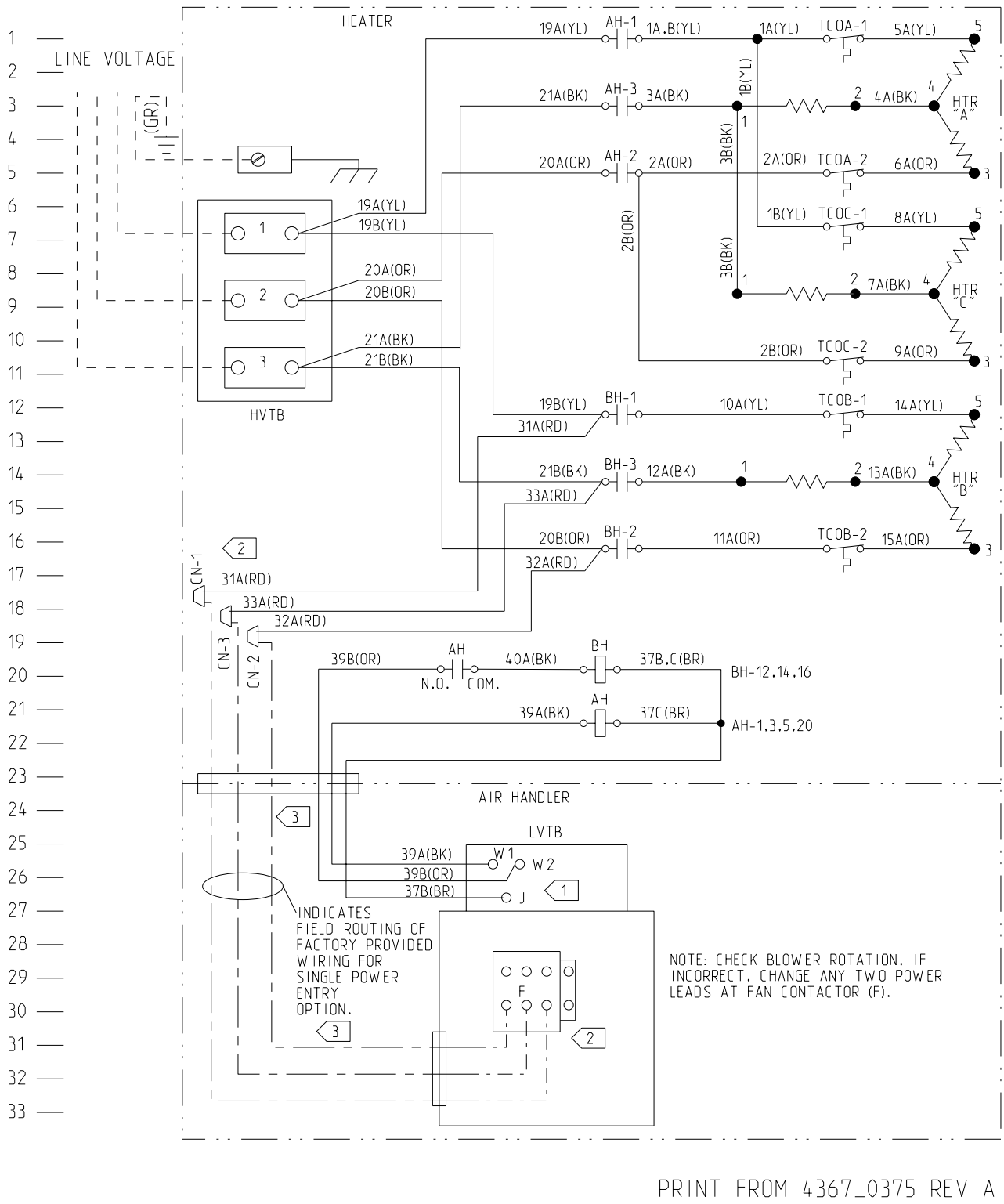

Figure 29. Wiring Diagram for BAYHTRL425A/W25A (continued)

Figure 30. Wiring Diagram for BAYHTRL430A/W30A

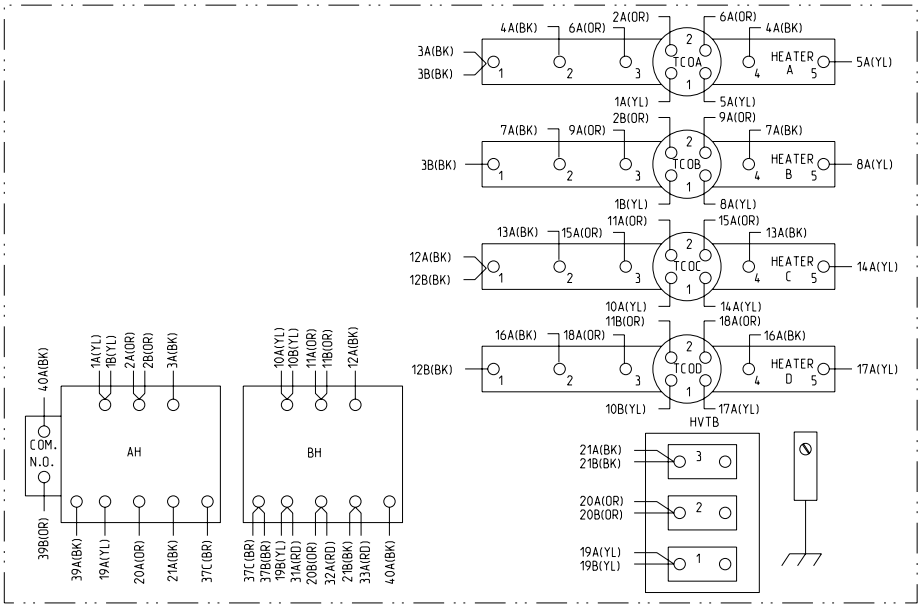

CAUTION

USE COPPER CONDUCTORS ONLY!

UNIT TERMINALS ARE NOT DESIGNED TO ACCEPT OTHER TYPES OF CONDUCTORS.

FAILURE TO DO SO MAY CAUSE DAMAGE TO THE EQUIPMENT.

ATTENTION

N'UTILISER QUE DES CONDUCTEURS EN CUIVRE!

LES BORNES DE L'UNITÉ NE SONT PAS CONÇUES POUR RECEVOIR D'AUTRES TYPES DE CONDUCTEURS.

L'UTILISATION DE TOUT AUTRE CONDUCTEUR PEUT ENDOMMAGER L'ÉQUIPEMENT.

PRECAUCIÓN

¡UTILICE ÚNICAMENTE CONDUCTORES DE COBRE!

LAS TERMINALES DE LA UNIDAD NO ESTÁN DISEÑADAS PARA ACEPTAR OTROS TIPOS DE CONDUCTORES.

SI NO LO HACE, PUEDE OCASIONAR DAÑO AL EQUIPO.

NOTES:

1. FIELD CONNECT CONTROL LEADS AS SHOWN:
   39A(BK)-LVTB W1 (FIRST STAGE HEAT)
   39B(OR)-LVTB W2 (SECOND STAGE HEAT)
   37B(BR)-LVTB J (HEATER/FAN INTERLOCK)
2. FOR SINGLE POWER ENTRY OPTION REMOVE CN-1, CN-2, AND CN-3 FROM RED WIRES AND TERMINATE THESE WIRES AT THE AIR HANDLER CONTACTOR (F) AS SHOWN. SEE THE HEATER INSTALLERS GUIDE AND AIR HANDLER WIRING DIAGRAM ON AIR HANDLER CONTROL BOX COVER FOR DETAILS.
3. BUSHING IS PROVIDED WITH HEATER.

DEVICE	DESCRIPTION	LINE
AH	CONTACTOR,HEATER	21
BH	CONTACTOR,HEATER	20
F	INDOOR FAN CONTACTOR	29
LVTB	LOW VOLTAGE TERMINAL	25,26
TCO_	TEMP. ACTUATED SWITCH	1-22
HVTB	HIGH VOLTAGE TERMINAL BLOCK	6-11
HTR	HEATER RACK	1-22

WIRE COLOR DESIGNATION			
ABBR	COLOR	ABBR	COLOR
BK	BLACK	RD	RED
BL	BLUE	OR	ORANGE
BR	BROWN	YL	YELLOW

MODEL NO.	ELECTRICAL RATING		
	VOLTS	KW	AMP
BAYHTRL435A	480	34.88	42
BAYHTRLW35A	600	34.88	35

⚠ WARNING

HAZARDOUS VOLTAGE!

DISCONNECT ALL ELECTRIC POWER INCLUDING REMOTE DISCONNECTS AND FOLLOW LOCK OUT AND TAG PROCEDURES BEFORE SERVICING. INSURE THAT ALL MOTOR CAPACITORS HAVE DISCHARGED STORED VOLTAGE. UNITS WITH VARIABLE SPEED DRIVE, REFER TO DRIVE INSTRUCTIONS FOR CAPACITOR DISCHARGE.

FAILURE TO DO THE ABOVE BEFORE SERVICING COULD RESULT IN DEATH OR SERIOUS INJURY.

⚠ AVERTISSEMENT

TENSION DANGEREUSE!

COUPER TOUTES LES TENSIONS ET OUVRIR LES SECTIONNEURS À DISTANCE, PUIS SUIVRE LES PROCÉDURES DE VERROUILLAGE ET DES ÉTIQUETTES AVANT TOUTE INTERVENTION. VÉRIFIER QUE TOUS LES CONDENSATEURS DES MOTEURS SONT DÉCHARGÉS. DANS LE CAS D'UNITÉS COMPORTANT DES ENTRAÎNEMENTS À VITESSE VARAIBLE, SE REPORTER AUX INSTRUCTIONS DE L'ENTRAÎNEMENT POUR DÉCHARGER LES CONDENSATEURS.

NE PAS RESPECTER CES MESURES DE PRÉCAUTION PEUT ENTRAÎNER DES BLESSURES GRAVES POUVANT ÊTRE MORTELLES.

⚠ ADVERTENCIA

¡VOLTAJE PELIGROSO!

DESCONECTE TODA LA ENERGÍA ELÉCTRICA, INCLUSO LAS DESCONEXIONES REMOTAS Y SIGA LOS PROCEDIMIENTOS DE CIERRE Y ETIQUETADO ANTES DE PROCEDER AL SERVICIO. ASEGÚRESE DE QUE TODOS LOS CAPACITORES DEL MOTOR HAYAN DESCARGADO EL VOLTAJE ALMACENADO. PARA LAS UNIDADES CON EJE DE DIRECCIÓN DE VELOCIDAD VARIABLE, CONSULTE LAS INSTRUCCIONES PARA LA DESCARGA DEL CONDENSADOR.

EL NO REALIZAR LO ANTERIORMENTE INDICADO, PODRÍA OCASIONAR LA MUERTE O SERIAS LESIONES PERSONALES.

Figure 31. Wiring Diagram for BAYHTRL435A/W35A

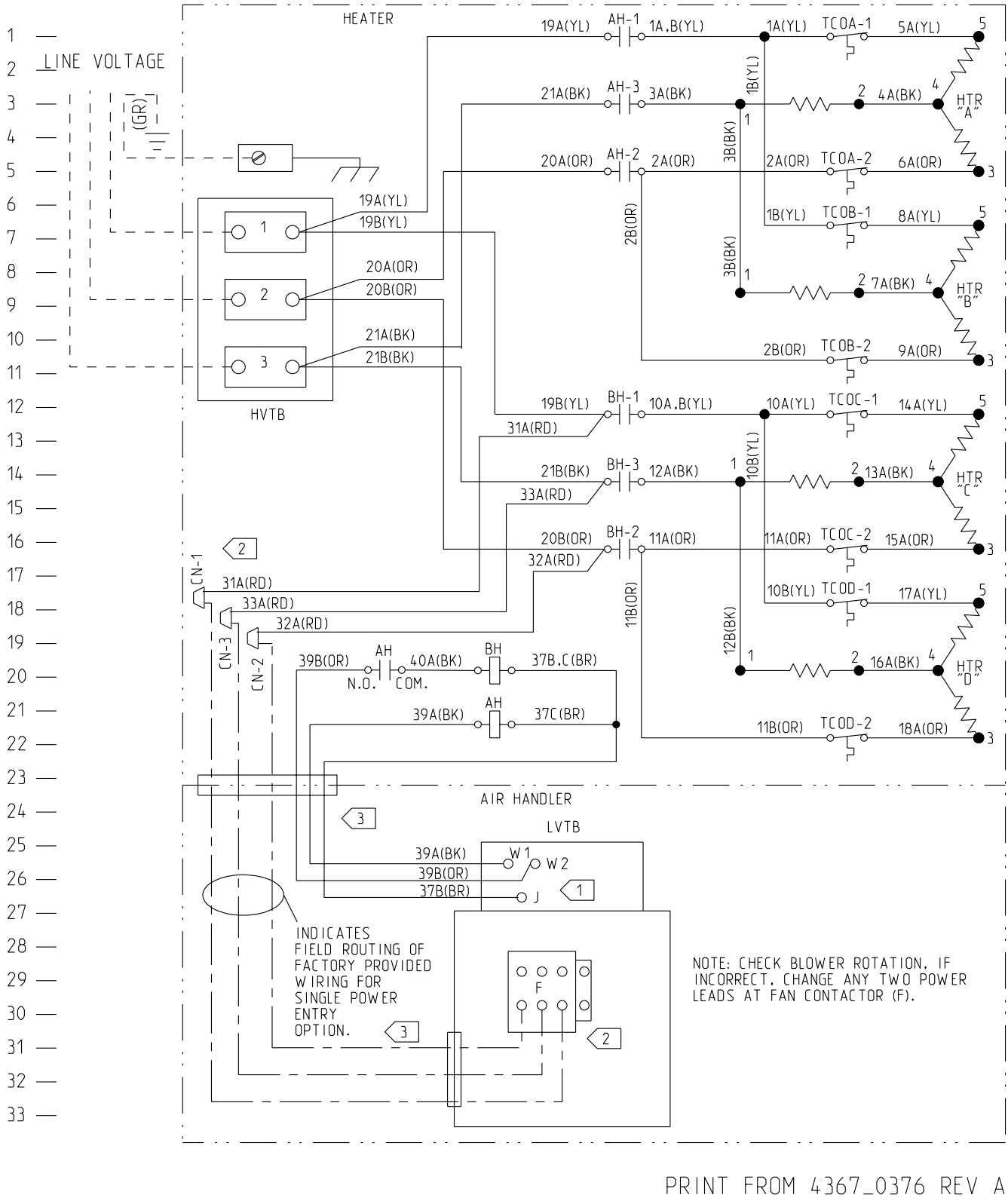

Figure 32. Wiring Diagram for BAYHTRL435A/W35A (continued)

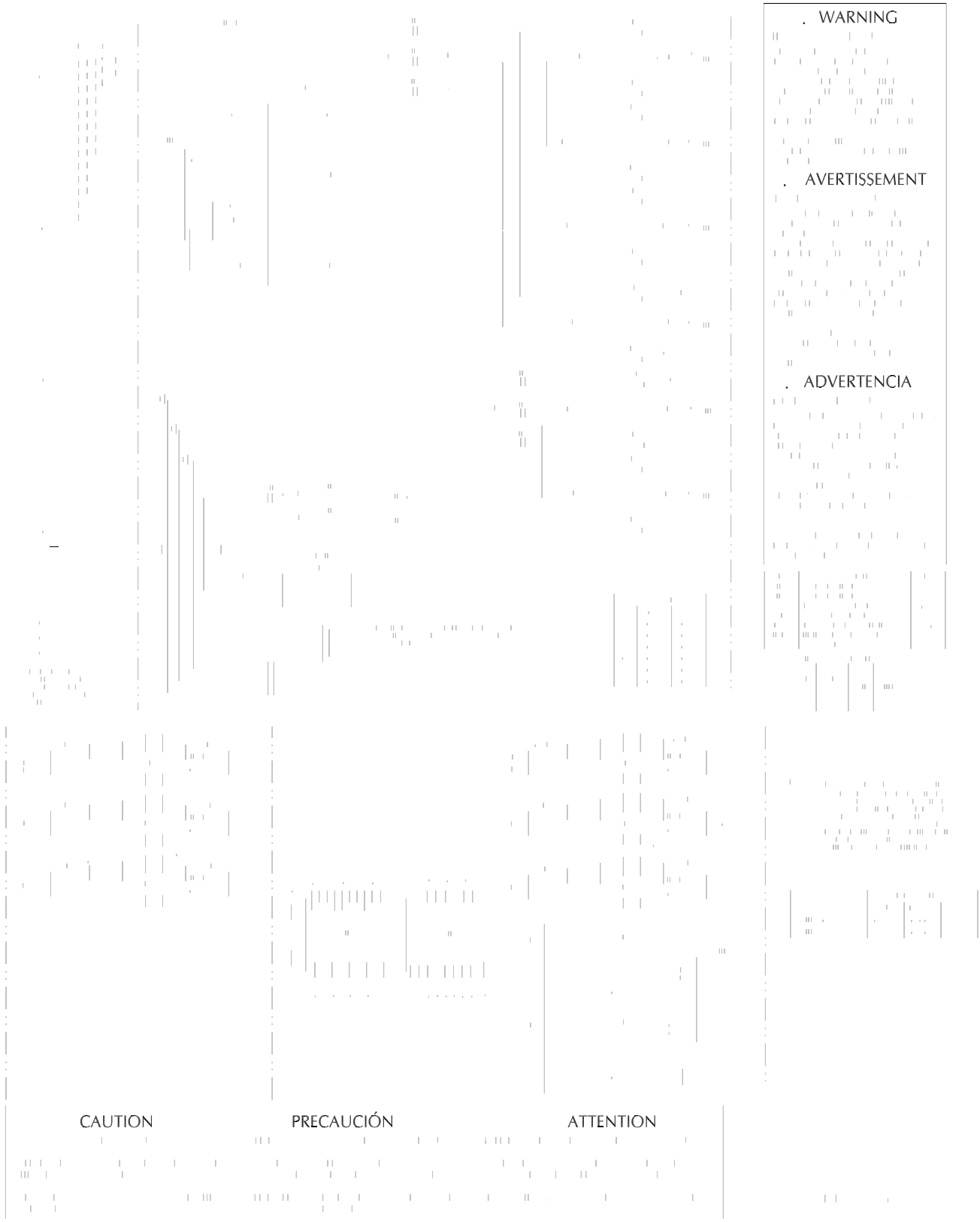

Figure 33. Wiring Diagram for BAYHTRL450A/W50A

Literature Order Number	ACC-SVN91A-EN
Date	December 2007
Supersedes	ACC-SVN91A-EN (March 2007)

The manufacturer has a policy of continuous product and product data improvement and reserves the right to change design and specifications without notice.

SPLIT SYSTEM HEAT PUMP CONDENSERS

MANUFACTURER:	**TRANE**
MODEL #:	**TWA090A400FB**
SIZE:	**60 Hz**

Installation Operation Maintenance

Split System Heat Pump Condensers

7½ - 20 Tons

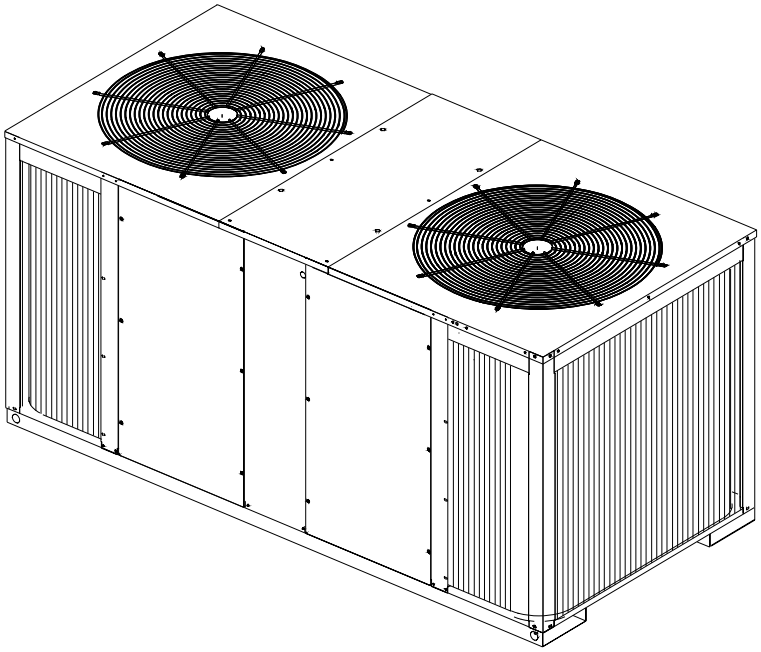

Model Numbers:

(60 Hz)	**(50 Hz)**
TWA090A***F	TWA075AD**F
TWA120A***F	TWA100AD**F
TWA180B***F	TWA155BD**F
TWA240B***F	TWA200BD**F

April 2008 **TWA-SVX01A-EN**

Warnings, Cautions and Notices

Warnings, Cautions and Notices. Note that warnings, cautions and notices appear at appropriate intervals throughout this manual. Warnings are provide to alert installing contractors to potential hazards that could result in personal injury or death. Cautions are designed to alert personnel to hazardous situations that could result in personal injury, while notices indicate a situation that may result in equipment or property-damage-only accidents.

Your personal safety and the proper operation of this machine depend upon the strict observance of these precautions.

Important: *All phases of this installation must comply with the NATIONAL, STATE & LOCAL CODES. In addition to local codes, the installation must conform with National Electric Code —ANSI/NFPA NO. 70 LATEST REVISION.*

ATTENTION: Warnings, Cautions and Notices appear at appropriate sections throughout this literature. Read these carefully.

⚠ **WARNING**: Indicates a potentially hazardous situation which, if not avoided, could result in death or serious injury.

⚠ **CAUTION**: Indicates a potentially hazardous situation which, if not avoided, may result in minor or moderate injury. It could also be used to alert against unsafe practices.

NOTICE: Indicates a situation that may result in equipment or property-damage only accidents.

Important Environmental Concerns!

Scientific research has shown that certain man-made chemicals can affect the earth's naturally occurring stratospheric ozone layer when released to the atmosphere. In particular, several of the identified chemicals that may affect the ozone layer are refrigerants that contain Chlorine, Fluorine and Carbon (CFCs) and those containing Hydrogen, Chlorine, Fluorine and Carbon (HCFCs). Not all refrigerants containing these compounds have the same potential impact to the environment. Trane advocates the responsible handling of all refrigerants-including industry replacements for CFCs such as HCFCs and HFCs.

Responsible Refrigerant Practices!

Trane believes that responsible refrigerant practices are important to the environment, our customers, and the air conditioning industry. All technicians who handle refrigerants must be certified. The Federal Clean Air Act (Section 608) sets forth the requirements for handling, reclaiming, recovering and recycling of certain refrigerants and the equipment that is used in these service procedures. In addition, some states or municipalities may have additional requirements that must also be adhered to for responsible management of refrigerants. Know the applicable laws and follow them.

⚠ WARNING Contains Refrigerant!

System contains oil and refrigerant and may be under positive pressure. Recover refrigerant to relieve pressure before opening the system. See unit nameplate for refrigerant type. Do not use non-approved refrigerants, refrigerant substitutes, or refrigerant additives. Failure to follow proper procedures or the use of non-approved refrigerants, refrigerant substitutes, or refrigerant additives could result in death or serious injury or equipment damage.

© 2008 Trane All rights reserved

⚠ WARNING

Hazardous Voltage w/Capacitors!

Disconnect all electric power, including remote disconnects before servicing. Follow proper lockout/tagout procedures to ensure the power cannot be inadvertently energized. For variable frequency drives or other energy storing components provided by Trane or others, refer to the appropriate manufacturer's literature for allowable waiting periods for discharge of capacitors. Verify with an appropriate voltmeter that all capacitors have discharged. Failure to disconnect power and discharge capacitors before servicing could result in death or serious injury.

NOTICE

Roof Damage!

System contains oil and refrigerant under high pressure. Roofs should be protected from exposure to oils and refrigerant in the system. If rooftop is not protected damage to the roof may occur.

Note: *One copy of this document ships inside the control panel of each unit and is customer property. It must be retained by the unit's maintenance personnel.*

This booklet describes proper installation, operation, and maintenance procedures for air cooled systems. By carefully reviewing the information within this manual and following the instructions, the risk of improper operation and/or component damage will be minimized.

It is important that periodic maintenance be performed to help assure trouble free operation. A maintenance schedule is provided at the end of this manual. Should equipment failure occur, contact a qualified service organization with qualified, experienced HVAC technicians to properly diagnose and repair this equipment.

Table of Contents

Warnings, Cautions and Notices 2
Model Number Description 5
Unit Dimensions 6
Electrical Data 9
Installation 10
System Pre-Start Procedure 22
System Start Procedure 24
Maintenance 27
Warranty 30
Wiring Diagram Matrix 33

Model Number Description

T W A	0 9 0	A	1	0 0	E	A
1 2 3	4 5 6	7	8	9 10	11	12

Digits 1,2,3 - Product Type

TWA = Split System Heat Pump Outdoor Unit

Digits 4,5,6 - Nominal Gross Cooling Capacity (MBh)

090 = 90 MBH, 7 1/2 Tons

120 = 120 MBH, 10 Tons

180 = 180 MBH, 15 Tons

240 = 240 MBH, 20 Tons

Digit 7 - Major Development Sequence

A = Single Circuit

B = Dual Circuit

Digits 8 - Electrical Characteristics

3 = 208-230/60/3

4 = 460/60/3

W = 575/60/3

D = 380-415/50/3

Digits 9,10 - Factory Installed Options

00 = Secondary Capacity and/or Factory Installed Options

0S = Black Epoxy Coated Coil

Digits 11 - Minor Design Sequence

A = Current Design Sequence

Digits 12 - Service Digit

A = Current Service Digit

Notes:

1. All products are identified by a multiple-character model number that precisely identifies a particular type of unit. An explanation of the alphanumeric identification code is provided above. Its use will enable the owner/operator, installing contractors, and service engineers to define the operation, specific components, and other options for any specific unit.
2. When ordering replacement parts or requesting service, be sure to refer to the specific model number, serial number, and DL number (if applicable) stamped on the unit nameplate.

Unit Dimensions

Figure 1. TWA075A, TWA090A Dimensional Data, Connection Locations, Clearances, Corner Weights

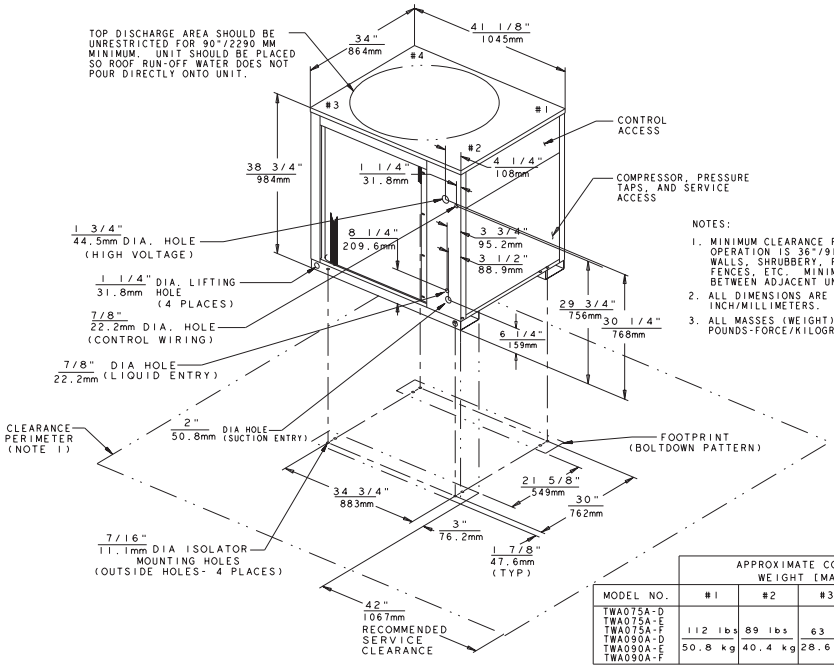

MODEL NO.	APPROXIMATE CORNER WEIGHT [MASS] #1	#2	#3	#4	TOTAL UNIT WEIGHT	TOTAL SHIPPING WEIGHT
TWA075A-D TWA075A-E TWA075A-F TWA090A-D TWA090A-E TWA090A-F	112 lbs 50.8 kg	89 lbs 40.4 kg	63 lbs 28.6 kg	79 lbs 35.9 kg	343 lb 155.5 kg	390 lb 176.9 kg

Figure 2. TWA100A, TWA120A Dimensional Data, Connection Locations, Clearances, Corner Weights

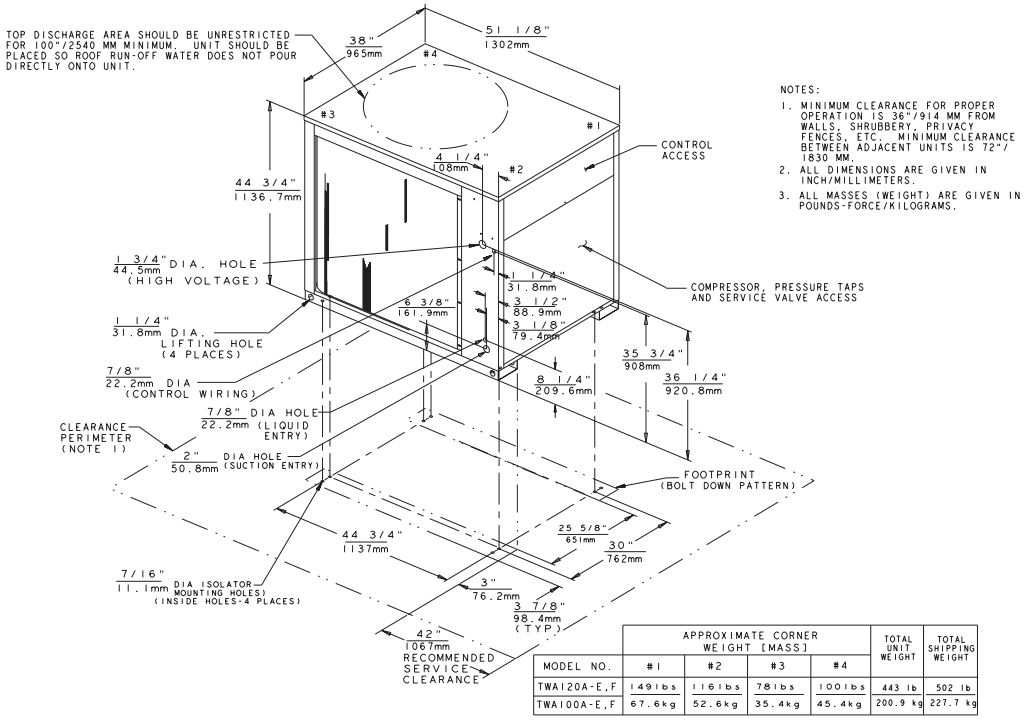

MODEL NO.	APPROXIMATE CORNER WEIGHT [MASS] #1	#2	#3	#4	TOTAL UNIT WEIGHT	TOTAL SHIPPING WEIGHT
TWA120A-E,F	149lbs 67.6kg	116lbs 52.6kg	78lbs 35.4kg	100lbs 45.4kg	443 lb 200.9 kg	502 lb 227.7 kg
TWA100A-E,F						

Figure 3. TWA155B, TWA180B Dimensional Data, Connection Locations, Clearances, Corner Weights

MODEL NO.	APPROXIMATE CORNER WEIGHT [MASS] #1	#2	#3	#4	TOTAL UNIT WEIGHT	TOTAL SHIPPING WEIGHT
TWA155BD--D,E,F TWA180B---D,E,F	195 lbs 88.5kg	186 lbs 84.4kg	175 lbs 79.5kg	184 lbs 83.5kg	740 lb 335.6 kg	816 lb 370.1 kg

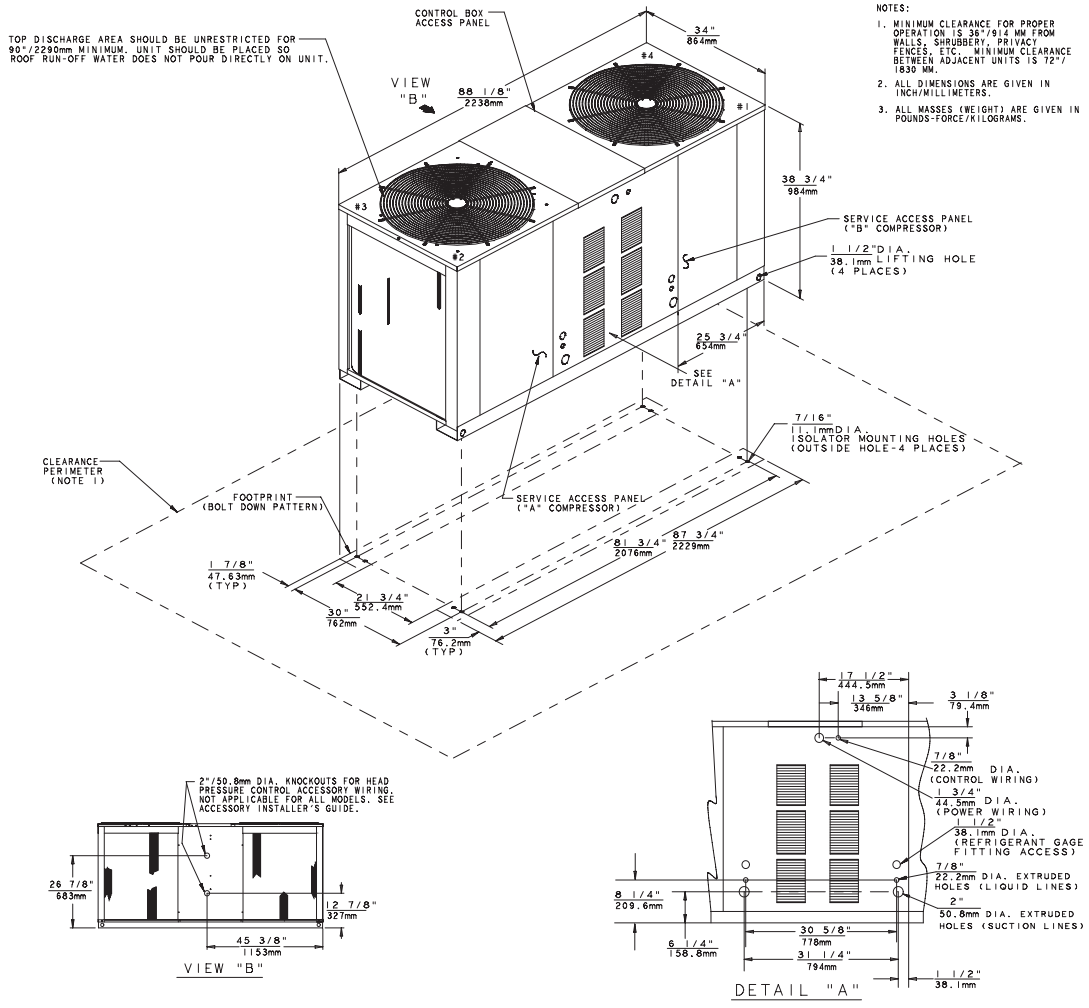

Figure 4. TWA200B, TWA240B Dimensional Data, Connection Locations, Clearances, Corner Weights

MODEL NO.	APPROXIMATE CORNER WEIGHT [MASS] #1	#2	#3	#4	TOTAL UNIT WEIGHT	TOTAL SHIPPING WEIGHT
TWA240B---F TWA200BD--F	253 lbs 114.9kg	250 lbs 113.5kg	173 lbs 78.5kg	173 lbs 78.5kg	849 lb 385.1 kg	934 lb 423.7 kg

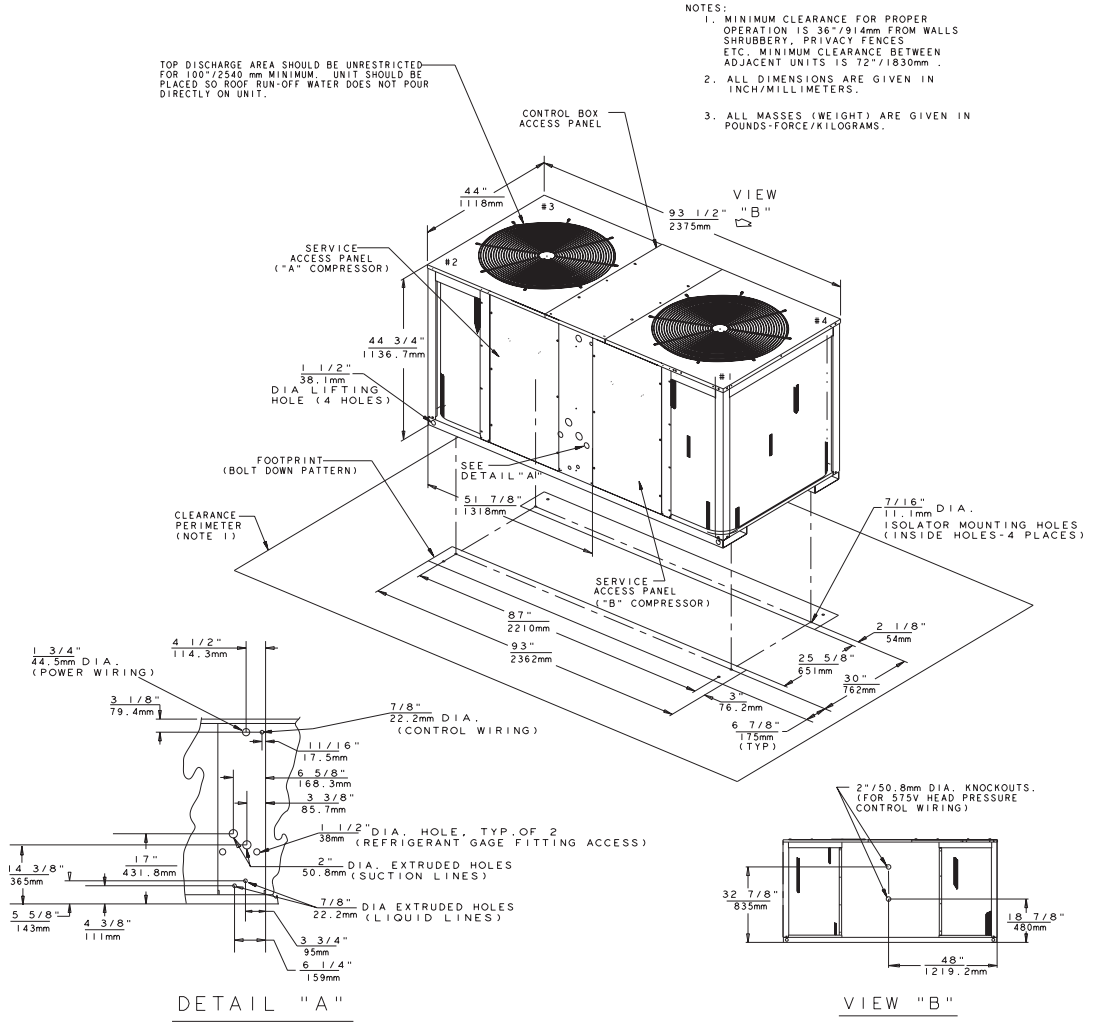

Electrical Data

Table 1. TWA Unit Electrical Data

	Basic Unit Characteristics				Compressor Motor			Outdoor Fan Motor			
						Amps				Amps	
Model Number	Electrical Characteristics	Allowable Voltage Range	Minimum Circuit Ampacity	Maximum Fuse Size	Qty.	RLA	LRA	Qty.	HP	FLA	LRA
TWA090A3	208-230/60/3	187-254	34.5	50	1	25.1	182.0	1	1/2	3.1	8.1
TWA090A4	460/60/3	414-506	18.1	25	1	13.2	94.9	1	1/2	1.6	3.7
TWA090AW	575/60/3	518-632	14.5	20	1	10.6	70.0	1	1/2	1.2	3.0
TWA075AD	380-415/50/3	380-415	12.6	20	1	8.8	90.0	1	1/2	1.6	3.7
TWA120A3	208-230/60/3	187-254	48.1	70	1	33.7	278.0	1	1	6.0	17.5
TWA120A4	460/60/3	414-506	23.3	35	1	16.5	124.0	1	1	2.7	7.0
TWA120AW	575/60/3	518-632	18.8	25	1	13.4	92.0	1	1	2.0	5.7
TWA100AD	380-415/50/3	380-415	22.5	35	1	15.8	124.0	1	1	2.7	7.0
TWA180B3	208-230/60/3	187-254	62.7	80	2	25.1	182.0	2	1/2	3.1	8.1
TWA180B4	460/60/3	414-506	32.9	45	2	13.2	94.9	2	1/2	1.6	3.7
TWA180BW	575/60/3	518-632	26.3	35	2	10.6	70.0	2	1/2	1.2	3.0
TWA155BD	380-415/50/3	380-415	28.4	35	2	11.2	94.9	2	1/2	1.6	3.7
TWA240B3	208-230/60/3	187-254	87.8	100	2	33.7	278.0	2	1	6.0	17.5
TWA240B4	460/60/3	414-506	42.5	50	2	16.5	118.0	2	1	2.7	7.0
TWA240BW	575/60/3	518-632	34.2	45	2	13.4	92.0	2	1	2.0	5.7
TWA200BD	380-415/50/3	380-415	41.0	50	2	15.8	124.0	2	1	2.7	7.0

Installation

Installation procedures should be performed in the sequence that they appear in this manual. Do not destroy or remove the manual from the unit. The manual should remain weather-protected with the unit until all installation procedures are complete.

Note: *It is not the intention of this manual to cover all possible variations in systems that may occur or to provide comprehensive information concerning every possible contingency that may be encountered during an installation. If additional information is required or if specific problems arise that are not fully discussed in this manual, contact your local Sales office.*

Note: *"Warnings" and "Cautions" appear at appropriate places in this manual. Your personal safety and the proper operation of this machine require that you follow them carefully. The Company assumes no liability for installations or servicing performed by unqualified personnel.*

Installation Checklist

An "Installation Checklist" is provided at the end of the installation section of this manual. Use the checklist to verify that all necessary installation procedures have been completed. Do not use the checklist as a substitute for reading the information contained in the manual. Read the entire manual before beginning installation procedures.

Unit Inspection

Inspect material carefully for any shipping damage. If damaged, it must be reported to, and claims made against the transportation company. Compare the information that appears on the unit nameplate with ordering and submittal data to insure the proper unit was shipped. Available power supply must be compatible with electrical characteristics specified on component nameplates. Replace damaged parts with authorized parts only.

Inspection Checklist

To protect against loss due to damage incurred in transit, complete the following checklist upon receipt of the unit.

- Inspect individual pieces of the shipment before accepting the unit. Check for obvious damage to the unit or packing material.
- Inspect the unit for concealed damage before it is stored and as soon as possible after delivery. Concealed damage must be reported within 15 days. If concealed damage is discovered, stop unpacking the shipment. Do not remove damaged material from the receiving location. Take photos of the damage if possible. The owner must provide reasonable evidence that the damage did not occur after delivery.
- Notify the carrier's terminal of damage immediately by phone and by mail. Request an immediate joint inspection of the damage by the carrier and the consignee.
- Notify the sales representative and arrange for repair. Do not repair the unit until the damage is inspected by the carrier's representative.

Initial Leak Test

All TWA units are shipped with a holding charge of nitrogen in each circuit. Remove the compressor access panel(s) shown in Figure 1, p. 6, Figure 2, p. 6 or Figure 3, p. 7, Figure 4, p. 8. Locate the liquid line or suction line service valve for each circuit. Install gauges to determine if the circuits are still pressurized. If not, the charge has escaped. Repair as required to obtain a leak-free circuit.

Lifting Recommendations

Before preparing the unit for lifting, estimate the approximate center of gravity for lifting safety. Because of placement of internal components, the unit weight may be unevenly distributed. Approximate unit weights are given in Table 2.

Table 2. Total Unit Weight and Corner Weights (lbs)

Model Number	Shipping Maximum	Net Maximum	Corner Weights			
			#1	#2	#3	#4
TWA090A TWA075A	390	343	112	89	63	79
TWA120A TWA100A	502	443	149	116	78	100
TWA180B TWA155B	816	740	195	186	175	184
TWA240B TWA200B	934	849	253	250	173	173

⚠WARNING
Improper Unit Lift!

Test lift unit approximately 24 inches to verify proper center of gravity lift point. To avoid dropping of unit, reposition lifting point if unit is not level. Failure to properly lift unit could result in death or serious injury or possible equipment or property-only damage.

NOTICE
Equipment Damage!

Do not use a fork lift on air handlers or subassemblies larger than size 30. Improper use of fork lifts on units larger than size 30 may result in equipment damage. Trane is not responsible for equipment damage resulting from improper forklifting practices.

⚠WARNING
Heavy Objects!

Do not use cables (chains or slings) except as shown. Each of the cables (chains or slings) used to lift the unit must be capable of supporting the entire weight of the unit. Lifting cables (chains or slings) may not be of the same length. Adjust as necessary for even unit lift. Other lifting arrangements may cause equipment or property-only damage. Failure to properly lift unit could result in death or serious injury. See details below.

NOTICE
Equipment Damage!

Use spreader bars to prevent lifting straps from damaging the unit. Install bars between lifting straps. This will prevent the straps from crushing the unit cabinet or damaging the unit finish.

The crated unit can be moved using a forklift of suitable capacity. For lifting the unit, attach lifting straps or slings securely to the lifting holes at each corner. Use spreader bars to protect the unit casing from damage. Test lift the unit to determine proper balance and stability.

Clearances

Provide enough space around the unit to allow unrestricted access to all service points. Refer to Figure 1, p. 6, Figure 2, p. 6, Figure 3, p. 7 or Figure 4, p. 8 for unit dimensions and minimum required service and free air clearances. Observe the following points to insure proper unit operation:

1. Do not install the unit under a low overhang. Condenser discharge must not be restricted. See Figure 1, Figure 2, Figure 3 or Figure 4.

Important: *Do not obstruct condenser discharge air. This can result in warm air recirculation through the coil.*

2. Do not locate the unit in a position where runoff water can fall into the fan discharge openings.
3. Condenser intake air is supplied from three sides of the unit. Adhere to the minimum required clearances given in Figure 1, p. 6, Figure 2, p. 6, Figure 3, p. 7 or Figure 4, p. 8.

Snow Belt Recommendations

In regions where deep snow is encountered, raise the unit a minimum distance of 8 to 12 inches above the mounting surface. This will reduce the risk of snow blocking the coil and inproves runoff of water produced during the defrost cycle. Avoid locating the unit where snow tends to drift. Snow accumulations must be removed from around the unit immediately to prevent drastic efficiency reduction. A snow drift barrier may be constructed around the unit to prevent snow blockage. Clearance between the snow barrier and the unit must comply with the clearances given in Figure 1, Figure 2 or Figure 3 or Figure 4.

Unit Mounting

Rooftop Mounting

If the unit will be roof mounted, determine for certain that the structure is strong enough to support the unit and any required accessories. Unit weights are given in Table 2.

The unit should be elevated on a level, field fabricated four-inch steel or wood 4" x 4" mounting frame. Complete the frame and secure it into position before lilfting the unit to the roof. The mounting frame must support a minimum of three of the unit's four sides and should span roof supports to distribute the load on the roof.

Figure 5. Roof Mounted Unit

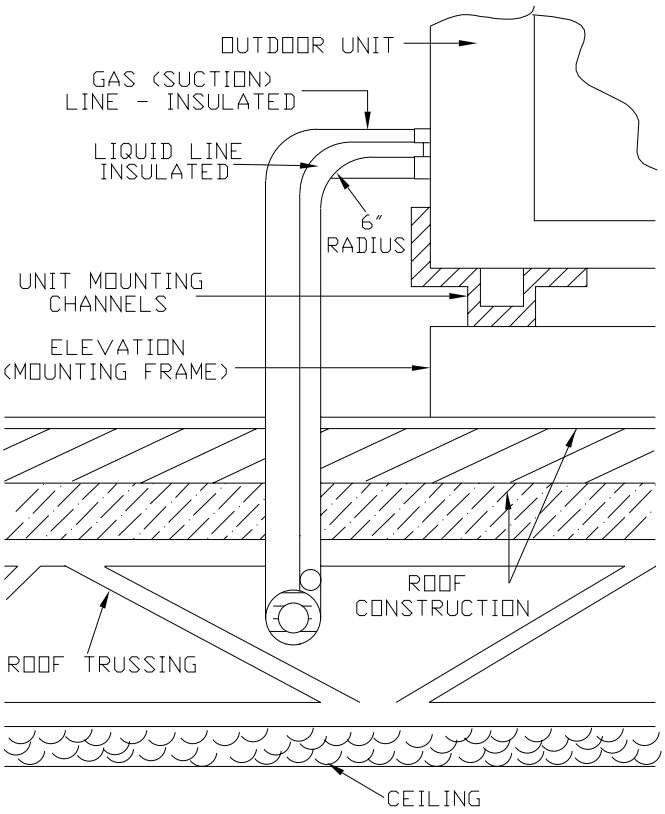

⚠ WARNING!
Heavy Objects!

Ensure that the roof structure supports are strong enough to support the weight of the unit and any accessories. Failure to follow these instruction could result in death, or serious injury and or property damage or equipment damage.

The following warning complies with State of California law, Proposition 65:

⚠ WARNING!
Fiberglass Wool!

Product contains fiberglass wool. Disturbing the insulation in this product during installation, maintenance or repair will expose you to airborne particles of glass wool fibers and ceramic fibers known to the state of California to cause cancer through inhalation. Glass wool fibers could result in respiratory, skin or eye irritation.

Ground Level Mounting

"For ground level installation, the unit base should be adequately supported and hold the unit near level. The installation must meet the guidelines set forth in local codes." The support should extend two inches beyond the unit base channels at all points. The unit and support must be isolated from any adjacent structure to prevent possible noise or vibration problems. Any ground level location must comply with required clearances given in Figure 1, p. 6, Figure 2, p. 6, Figure 3, p. 7 or Figure 4, p. 8.

Refrigerant Piping

⚠ WARNING
Contains Refrigerant!

System contains oil and refrigerant and may be under positive pressure. Recover refrigerant to relieve pressure before opening the system. See unit nameplate for refrigerant type. Do not use non-approved refrigerants, refrigerant substitutes, or refrigerant additives. Failure to follow proper procedures or the use of non-approved refrigerants, refrigerant substitutes, or refrigerant additives could result in death or serious injury or equipment damage.

⚠ WARNING
Refrigerant Vapor Hazard!

All fluorocarbon refrigerant vapors are heavier than air. Vapors may collect and concentrate in confined spaces or low lying areas which will result in the displacement of air. This poses a potential health risk due to suffocation. Provide adequate ventilation to the work area to avoid over-exposure of fluorocarbon refrigerants. Refer to the appropriate MSDS sheets and OSHA guidelines for information referring to allowable personal exposure levels and handling guidelines. Failure to follow proper handling guidelines could result in death or serious injury.

Structural Preparation

Holes must be made in the structure to run refrigerant lines. For the majority of ground-level installations, the holes can be made in the header that rests on top of the foundation. Alternatively, these holes may also be made in the foundation itself. On roof-mounted units, refrigerant lines should enter the building as close to the unit as possible; preferably within three to four inches of the refrigerant connection on the unit, plus a six-inch (long radius) 90 degree ell entering the building. (See Figure 5, p. 12)

Refrigerant Piping Guidelines

1. Maximum recommended line lengths: (per circuit)

a. Maximum linear length = 80 Ft. (w/o accumulator)
b. Maximum suction line lift = 60 Ft.
c. Maximum liquid line lift = 60 Ft.

2. Maximum allowable pressure drops (R-22):
   a. Suction line = 6 psi
   b. Liquid line (without subcooler) = 35 psi

Route refrigerant piping for minimum linear length, minimum number of bends and fittings (no reducers) and minimum amount of line exposed to outdoor ambients.

3. Recommended line sizes:
   a. Suction line - 1 3/8 inch sealed type L refrigerant tubing.
   b. Liquid line - 1/2 inch sealed type L refrigerant tubing.

Note: *Insulate all refrigerant piping and connections.*

Refrigerant Piping Procedures (Outdoor Units)

Each TWA unit ships with a holding charge of dry nitrogen The nitrogen should be removed and the entire system evacuated (at the proper time) to avoid possible contamination.

1. Remove the compressor service access panel.
2. Locate the liquid and suction line service valves. Check that the piping connection stubs on the valves (Figure 6) line up properly with the holes in the unit cabinet.

Figure 6.

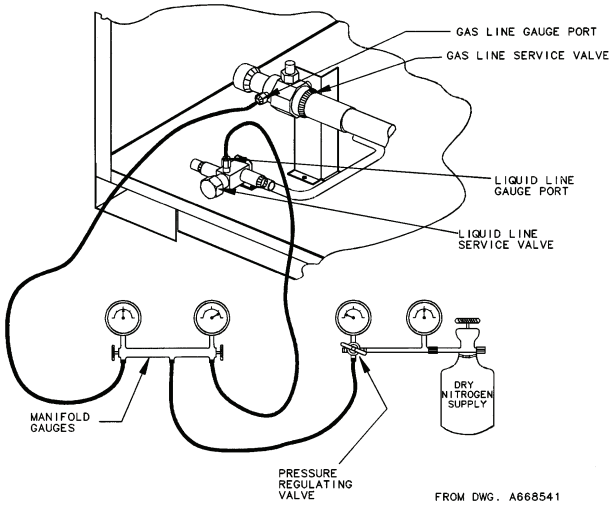

3. Remove the refrigerant connection seal caps and open the service valve slowly to release the nitrogen from the unit.

NOTICE
System Component Damage!

Do not remove the seal caps from refrigerant connections until prepared to braze refrigerant lines to the connections. Excessive exposure to atmosphere may allow moisture or dirt to contaminate the system, damaging valve seals and causing ice formation in system components.

⚠ WARNING
Hazard of Explosion and Deadly Gases!

Never solder, braze or weld on refrigerant lines or any unit components that are above atmospheric pressure or where refrigerant may be present. Always remove refrigerant by following the guidelines established by the EPA Federal Clean Air Act or other state or local codes as appropriate. After refrigerant removal, use dry nitrogen to bring system back to atmospheric pressure before opening system for repairs. Mixtures of refrigerants and air under pressure may become combustible in the presence of an ignition source leading to an explosion. Excessive heat from soldering, brazing or welding with refrigerant vapors present can form highly toxic gases and extremely corrosive acids. Failure to follow all proper safe refrigerant handling practices could result in death or serious injury.

4. Cut, fit and braze tubing, starting at the outdoor unit and work toward the indoor unit.

Note: *Use long radius ells for all 90° bends.*

All brazing should be done using a 2 to 8 psig dry nitrogen purge flowing through the pipe being brazed (Figure 5).

NOTICE
System Component Damage!

Install a regulating valve between the nitrogen source and the gauge manifold (Figure 6). Unregulated pressure can damage system components.

NOTICE
Valve Damage!

Disassemble the thermal expansion valve before completing the brazing connections. If necessary, wrap the valve in a cool, wet cloth while brazing. Failure to protect the valve from high temperatures may result in damage to internal components.

5. Shut off nitrogen supply.
6. Shut off the manifold valve for the line that is connected to the suction line service valve. Disconnect the line from the gauge port on the valve.

Figure 7.

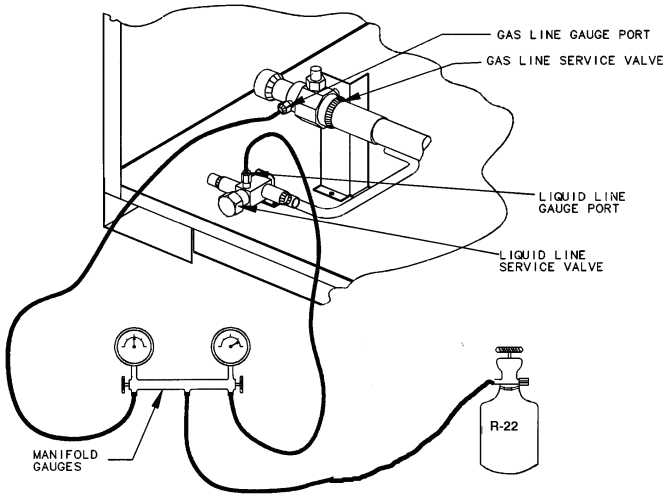

Refrigerant Piping Procedure (Indoor Unit)

Once liquid and suction lines are complete to the refrigerant connections on the indoor unit, puncture the seal caps on the indoor unit connection stubs to release the dry nitrogen charge.

NOTICE

Equipment Damage!

Do not apply heat to remove seal caps until they have been punctured. If seal caps are intact, application of heat may generate excessive pressure in the unit and result in damage to the coil or expansion valve.

1. Remove both seal caps from the indoor unit connection stubs.

NOTICE

Equipment Damage!

Do not remove seal caps until prepared to braze refrigerant lines to the connections. Extended exposure to atmosphere may allow moisture or dirt to contaminate the system, damaging valve seats and causing ice formation in system components.

⚠ WARNING

Hazard of Explosion and Deadly Gases!

Never solder, braze or weld on refrigerant lines or any unit components that are above atmospheric pressure or where refrigerant may be present. Always remove refrigerant by following the guidelines established by the EPA Federal Clean Air Act or other state or local codes as appropriate. After refrigerant removal, use dry nitrogen to bring system back to atmospheric pressure before opening system for repairs. Mixtures of refrigerants and air under pressure may become combustible in the presence of an ignition source leading to an explosion. Excessive heat from soldering, brazing or welding with refrigerant vapors present can form highly toxic gases and extremely corrosive acids. Failure to follow all proper safe refrigerant handling practices could result in death or serious injury.

2. Turn nitrogen supply on. Nitrogen enters thorough liquid line gauge port.
3. Braze the liquid line connections.
4. Open the gauge port on the suction line and then braze the suction line to the connection stub. Nitrogen will bleed out the open gauge port on the suction line.
5. Shut off nitrogen supply.

Leak Check

After the brazing operation of refrigerant lines to both the outdoor and indoor unit is completed, the field brazed connections must be checked for leaks. Pressurize the system through the service valve with dry nitrogen to 200 psi. Use soap bubbles or other leak-checking methods to ensure that all field joints are leak free. If not, release pressure, repair and repeat leak test.

System Evacuation

1. After completion of leak check, evacuate the system.
2. Attach appropriate hoses from manifold gauge to gas and liquid line pressure taps.

Note: *Unnecessary switching of hoses can be avoided and complete evacuation of all lines leading to sealed system can be accomplished with manifold center hose and connecting branch hose to a cylinder of R-22 and vacuum pump.*

3. Attach center hose of manifold gauages to vacuum pump.
4. Evacuate the system to hold a 350 micron vacuum.

5. Close off valve to vacuum pump and observe the micron gauge. If gauge pressure rises above 500 microns in one (1) minute, then evacuation is incomplete or the system has a leak.
6. If vacuum gauge does not rise above 500 microns in one (1) minute, the evacuation should be complete.
7. With vacuum pump and micron gauge blanked off, open valve on R-22 cylinder and allow refrigerant pressure to build up to about 40 psig.
8. Close valve on the R-22 supply cylinder. Close valves on manifold gauge set and remove refrigerant charging hoses from liquid and gas gauge ports.
9. Leak test the entire system. Using proper procedures and caution, repair any leaks found and repeat the leak test.

Refrigerant Charging Procedure

If charging by weight, refer to refrigerant charges that are given in Table 3. If additional refrigerant is needed because of length of line, calculate the requirement using Table 4. Charge by weight through the gauge port on the liquid line. Once the charge enters the system, backseat (open) the liquid line service valve and disconnect the charging line and replace the cap on the gauge port.

Insulating and Isolating Refrigerant Lines

Insulate the entire suction line with refrigerant piping insulation. Also insulate any portion of the liquid line exposed to temperature extremes. Insulate and isolate liquid and suction lines from each other. Isolate refrigerant lines from the structure and any duct work.

Note: *To prevent possible noise or vibration problems, be certain to isolate refrigerant lines from the building.*

Table 3. TWA Refrigerant Charge (R-22)[(a)]

Model Number	Refrigerant Charge
TWA090A	18 lbs. 0.0 oza.
TWA075A	
TWA120A	31 lbs. 8.0 ozs.
TWA100A	
TWA180B	18 lbs. 0.0 ozs. (per circuit)
TWA155B	
TWA240B	22 lbs. 4.0 ozs. (per circuit)
TWA200B	

(a) Sufficient operating charge for outdoor unit and 25 feet of nominally sized refigerant piping.

Table 4. Additional Required Refrigerant[(a)(b)]

Additional Tubing Length	Additional R-22 Required (lbs.)
15 ft.	1 lb. 4 oz.
25 ft.	2 lbs. 1 oz.
32 ft.	2 lbs. 11 oz.
40 ft.	3 lbs. 5 oz.

(a) Based on 1-3/8" dia. Suction line, 1/2" liquid line.
(b) Add .5 lbs. R-22 for each additional six feet of tubing length over 40 feet.

Note: *For tubing over 40 ft. calculate the additional refrigerant needed, based on notes above.*

Gaseous Charging

This procedure is accomplished with the unit operating. Electrical connections must be complete. Do not proceed until the system is ready to operate.

Procedure

1. Connect R-22 drum with gauge manifold to the Schrader valves (pressure taps) on the compressor discharge and suction lines (Figure 6).

Note: *The compressor access panel must be installed when the unit is running and being charged. The control box access panel must be removed, and the manifold hoses must be routed through an opening located in the bottom front of the control box. The opening has a pivoted cover plate.*

⚠WARNING
Live Electrical Components!

During installation, testing, servicing and troubleshooting of this product, it may be necessary to work with live electrical components. Have a qualified licensed electrician or other individual who has been properly trained in handling live electrical components perform these tasks. Failure to follow all electrical safety precautions when exposed to live electrical components could result in death or serious injury.

2. Turn on power to the unit. Allow the system to run for five to ten minutes to stabilize operating conditions.
3. Measure airflow across the indoor coil. Compare the measurements with the fan performance data in the Data/Submittal or Service Facts. Once proper airflow is established, observe the suction and head pressure gauges on the gauge manifold. Pressure reading should fall approximately at the points shown by the pressure curves in Service Facts. Add or remove refrigerant (gas only) as required to obtain correct head and suction pressures. Check suction line superheat and condenser subcooling to ensure the unit is operating properly.

⚠WARNING
Hazardous Voltage w/Capacitors!

Disconnect all electric power, including remote disconnects and discharge all motor start/run capacitors before servicing. Follow proper lockout/tagout procedures to ensure the power cannot be inadvertently energized. For variable frequency drives or other energy storing components provided by Trane or others, refer to the appropriate manufacturer's literature for allowable waiting periods for discharge of capacitors. Verify with an appropriate voltmeter that all capacitors have discharged. Failure to disconnect power and discharge capacitors before servicing could result in death or serious injury.

4. Disconnect all power to the unit.
5. Remove the charging system from the unit and close the opening in the bottom of the control box with the pivotal cover before attempting to replace access panel.
6. Replace all panels.

Electrical Wiring

TWA field wiring consists of providing power supply to the unit, installing the system indoor thermostat and providing low voltage system interconnecting wiring. Access to elec trical connection locations is shown in Figure 1, p. 6, Figure 2, p. 6 and Figure 4, p. 8.

⚠WARNING
Grounding Required!

Follow proper local and state electrical code on requirements for grounding. Failure to follow code could result in death or serious injury.

Unit Power Supply

The installer must provide line voltage circuit(s) to the unit main power terminals as shown by the unit wiring diagrams in Service Facts or field wiring. Power supply must include a disconnect switch in a location convenient to the unit. Ground the unit according to local codes and provide flexible conduit if codes require and/or if vibration transmission may cause noise problems.

Important: *All wiring must comply with applicable local and national (NEC) codes. Type and location of disconnect switches must comply with all applicable codes.*

NOTICE
Use Copper Conductors Only!

Unit terminals are not designed to accept other types of conductors. Failure to use copper conductors may result in equipment damage.

⚠WARNING
Hazardous Voltage w/Capacitors!

Disconnect all electric power, including remote disconnects and discharge all motor start/run capacitors before servicing. Follow proper lockout/tagout procedures to ensure the power cannot be inadvertently energized. Verify with an appropriate voltmeter that all capacitors have discharged. Failure to disconnect power and discharge capacitors before servicing could result in death or serious injury.

Determine proper wire sizes and unit protective fusing requirements by referring to the unit nameplate and/or the unit Service Facts. Field wiring diagrams for accessories are shipped with the accessory.

Low Voltage Wiring

Mount the indoor thermostat in accordance with the thermostat installation instructions. Install color-coded, weather-proof, multi-wire cable according to the Interconnecting Wiring diagrams in the Air Handler IOM.

Figure 8. Typical Split System Heat Pump Refrigerant Circuits

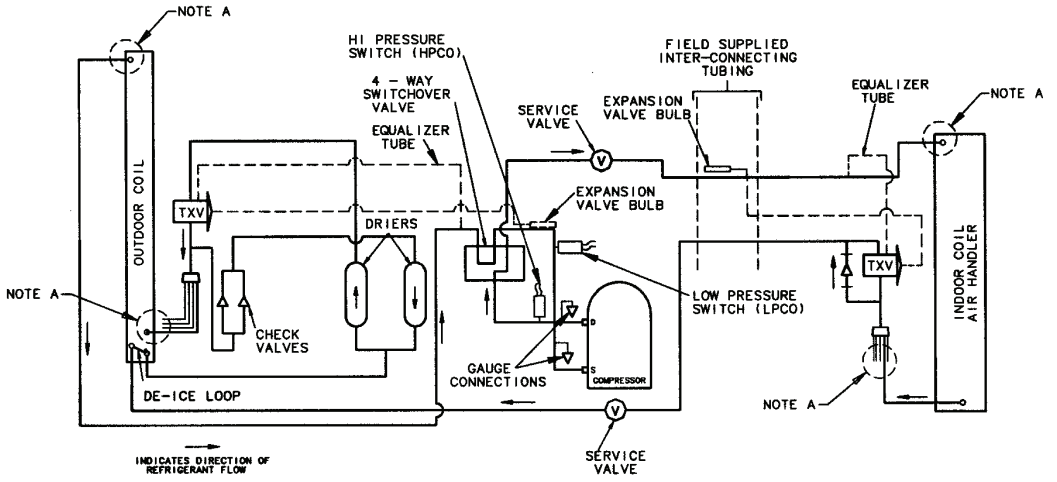

HEATING MODE

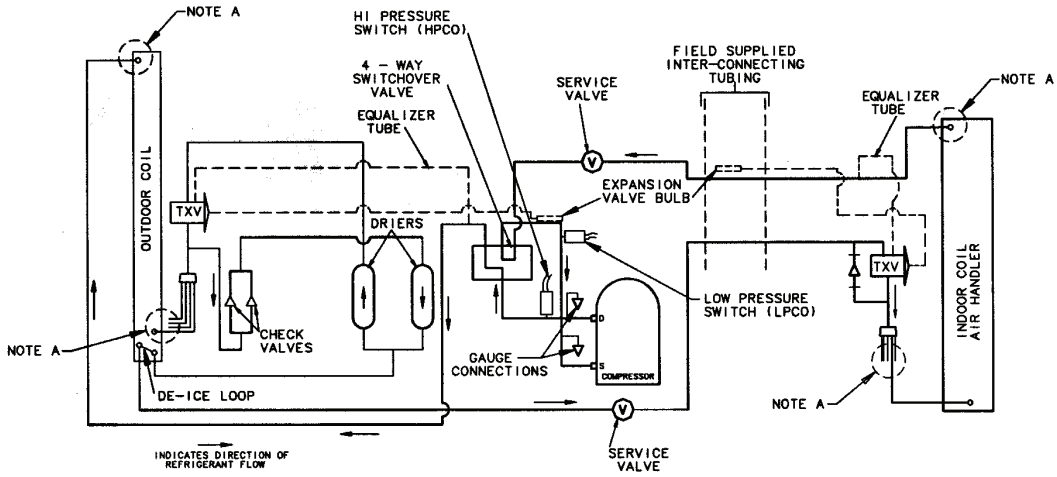

COOLING MODE

NOTE A: ONLY ONE INDOOR & OUTDOOR COIL ENTRY/EXIT CIRCUIT IS SHOWN; ALL MODELS HAVE MULTIPLE ENTRY/EXIT CIRCUITS.

Figure 9. Typical Field Wiring

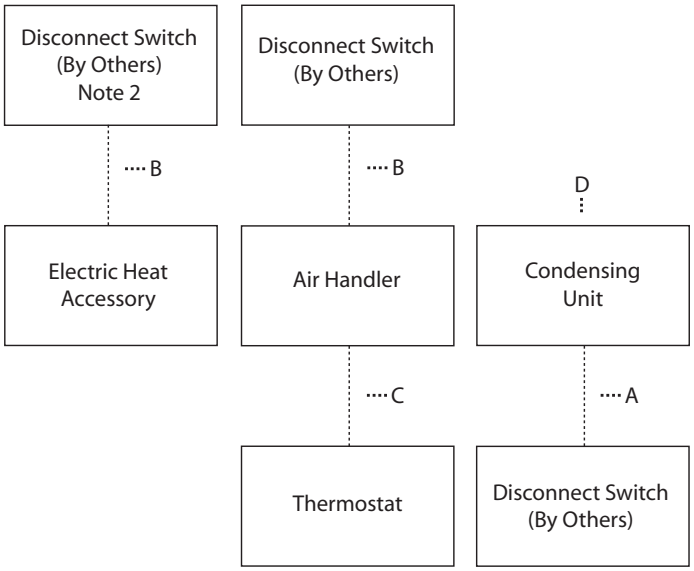

Notes:
1. Wiring shown with dashed lines is to be furnished and installed by the customer. All customer-supplied wiring must be copper only and must conform to NEC and local electrical codes.Codes may require line of sight between disconnect switch and unit.
2. When electric heater accessory is used

⚠WARNING
Hazardous Voltage

Disconnect all electric power, including remote disconnects before servicing. Follow proper lockout/tagout procedures to ensure the power can not be inadvertently energized. Failure to disconnect power before servicing could result in death or serious injury.

NOTICE
Use Copper Conductors Only!

Unit terminals are not designed to accept other types of conductors. Failure to use copper conductors could result in equipment damage.

TWA090 & 075A/TWE090 & 075A
TWA120 & 100A/TWE120 & 100A

Field Wiring:

A — 3 power wires, line voltage

B — 3 power wires, line voltage for 3 phase; 2 wires for single phase

C — Heat pump thermostat: 6 wires, 24 volts; Electric heat: Add 2 additional wires, 24 volts

D — 6 wires, 24 volts; Outdoor thermostat: add 1 additional wire, 24 volts; Electric heat: Add 1 additional wire, 24 volts

System Pre-Start Procedure

Safety Controls

Note: *All of these controls may not be installed on your unit, check electrical schematic.*

Evaporator Defrost Control (EDC)

This control is located in the Air Handler of Split Units. The control's sensing tube is imbedded vertically in the evaporator coil, near the center. This device will stop the compressor if the coil temperature drops below it's setting. The indoor air will still circulate across the coil, bringing the temperature of the coil back up to the cut-in temperature of the evaporator defrost control.

Low Pressure Cut-Out (LPCO)

This control's sensor is located in the suction (gas) line, near the compressor. The control will stop the compressor and outdoor fans if suction pressure drops below the Low Pressure Cut-Out setting. Once the suction pressure has returned to normal, the compressor and out door fans will cycle back on.

High Pressure Cut-Out (HPCO)

This control's sensor is located in the discharge line. This device will shut off the compressor and the outdoor fan(s) if the discharge pressure exceeds the High Pressure Cut-Out setting. Once the discharge pressure has returned to normal, the compressor will cycle back on.

Internal Overload Protector (IOL)

This device is a current/thermal actuated warp switch, imbedded in the compressor motor windings. It will shut off the compressor if the temperature or current of the compressor motor windings exceeds it's design trip temperature.

Note: *The IOL will put the compressor back in operation once the compressor motor heat has dropped below the trip setting; however, a check of the refrigerant and electrical system should be made to determine the cause and be corrected.*

Installation Checklist

Complete this checklist once the unit is installed to verify that all recommended procedures have been accomplished before starting the system. Do not operate the system until all items covered by this checklist are complete.

7. Inspect unit location for proper required service clearances.
8. Inspect unit location for proper free air clearances.
9. Inspect unit location for secure, level mounting position.

Refrigerant Piping

1. Performed initial leak test?
2. Connected properly sized and constructed liquid and suction lines to the connection stubs at both the indoor and outdoor units?
3. Insulated the entire suction line?
4. Insulated portions of liquid line exposed to extremes in temperature?
5. Evacuated each refrigerant circuit to 350 microns?
6. Charged each circuit with proper amount of R-22?

Electrical Wiring

1. Provided unit power wiring (with disconnect) to proper terminals in the unit control section?
2. Installed system indoor thermostat?
3. Installed system low voltage interconnecting wiring to proper terminals of outdoor unit, indoor unit and system thermostat?

System Start Procedure

Sequence of Operation

Unit Start-Up

Once the unit is properly installed and pre-start procedures are complete, start the unit by turning the System Switch on the indoor thermostat to either HEAT, COOL or AUTO. The system should operate normally.

NOTICE

Compressor Damage!

Ensure the disconnect for the indoor air handler is closed before operating the system. Operating the indoor unit without the indoor fan energized, can cause unit trip-out on high pressure control and/or liquid flood back to the compressor.

General

Operation of the unit is controlled by the HEAT and/or COOL setting in the thermostat. (An optional automatic changeover thermostat, when in the AUTO position, automatically changes to heat or cool cycles with sufficient room temperature change.) The fan switch can be placed in either the ON position, causing continuous indoor fan operation, or the AUTO position causing fan operation to coincide with heating or cooling run cycles. With the disconnect switch in the closed position, current is supplied to the compressor crankcase heater(s) and the control transformer. The outdoor fan relay (ODF) is energized through a continuous 24 volt circuit from the transformer, and controlled through normally closed contacts on the defrost control board (DFC).

Cooling Mode

With the system switch on the thermostat set to COOL, current is supplied from the "R" terminal to the "O" terminal on the low voltage terminal board of the outdoor unit. This energizes the switch-over valve (SOV) and places it in the cooling position.

The evaporator defrost relay (EDR) is also energized at this time, opening EDR-1 contacts to allow the evaporator defrost control (EDC) to function while in the cooling mode, and opening EDR-2 contacts to prevent defrost control (DFC) operation while in cooling mode.

When the room temperature is 1½ degrees above the thermostat setting, a cooling cycle is initiated by closing of the TSC-1 contacts in the thermostat.

When closed, these contacts supply power from "R" terminal through TSC-1 to "Y" terminal on the low voltage terminal board of the outdoor unit, which supplies power to the (CC) compressor contactor, (compressor auxiliary relay (CCA) or auxiliary compressor contactor (ACCA) on specific models.

This closes the compressor contacts, which starts the compressor and outdoor fan motor. TSC-1 contacts also supply power to the "G" terminal in the thermostat, which energizes the fan relay (F), starting the indoor fan motor (provided the fan switch is in the AUTO position).

On dual circuit units, when second stage cooling is required, "Y2" terminal from the thermostat energizes auxiliary compressor contactor (ACC) which energizes compressor contactor B (CC-B), (ACCB on some models) provided the HPCO and LPCO are closed.

An "O" signal for cooling is supplied to the defrost control board (DFC-B) through the evaporator defrost relay (EDR) which was previous energized. This signal causes an output to the switch-over valve (SOV-B), placing it in the cooling mode.

Heating Mode

With the system switch on the thermostat set to the HEAT position, and the room temperature drops approximately 1 ½ degrees below the thermostat setting, a heating cycle is initiated by closing of the TSH-1 contacts.

When closed, these contacts supply power from "R" terminal through TSH-1 to "Y" terminal on the low voltage terminal board of the outdoor unit, which supplies power to the (CC) compressor contactor, (compressor auxiliary relay (CCA) or auxiliary compressor contactor (ACCA) on specific models).

This closes the compressor contacts, which start the compressor and outdoor fan motor. TSH-1 contacts also provide power to the "G" terminal on the thermostat, which energizes the fan relay (F), starting the indoor fan motor (provided the fan switch is in the AUTO position).

While in the normal heating position, "O" terminal, which powers the switch-over valve (SOV) and the evaporator defrost relay (EDR), will remain de-energized by the thermostat. EDR-1 contacts close, bypassing the evaporator defrost control (EDC). EDR-2 contacts close which supply power to the defrost control timer (DFC), allowing it to operate during the heating cycle.

On dual circuit units, when second stage heating is required, "Y2" from the indoor thermostat will energize auxiliary compressor contactor (ACC), which will energize compressor contactor B (CC-B) (ACCB on some models), provided HPCO and LPCO are closed.

Control power for the "B" compressor is supplied from the second transformer (TNS-B) which also powers the supplementary heaters through the heat relay (H) when additional heat is required by "W" terminal.

Time Temperature Defrost

During the heating cycle, the outdoor coil may require a defrost cycle which is controlled by the defrost control timer (DFC). It is energized continuously, allowing a defrost cycle every 50, 70 or 90 minutes when the defrost terminator (DT) closes at the appropriate line temperature.

The defrost control timer (DFC) opens the circuit to the outdoor fan relay (ODF), and closes a circuit through the timer board which energizes the switch-over valve (SOV), and provides power to the "X2" terminal for supplementary heat placing the unit into the defrost cycle.

The compressor will start 30 seconds after the initiation of the defrost cycle. Supplementary heat is brought on to control indoor temperature during defrost. When the liquid line temperature reaches approximately 70°F, or a 10 minute timed cycled expires, the defrost control timer (DFC) closes the to the outdoor fan relay (ODF) and opens the circuit to the switch-over valve (SOV) and the "X2" terminal, returning the unit to the heating mode.

On dual circuit units, defrost of each outdoor coil is independent and will occur as required. Low pressure cutout (LPCO) is disabled during defrost.

Note: *Do not change from the 70 minute full timing cycle in the Southern U.S. ("sunbelt") areas. In Northern climates, the 50 minute defrost cycle may be needed, especially in areas of frequent snow.*

Supplementary Heat

The 1st stage of supplementary heat is cycled on when the indoor temperature drops approximately 2 degrees below the thermostat setting. TSH-1 establishes compressor operation through the "Y" terminal.

TSH-2 contacts close providing power to the "W" terminal on the indoor thermostat, which supplies power to the supplementary heater control circuit when the auxiliary fan contacts (F-AUX) are closed. Additional supplementary heat or stages of heat may have been added with the use of outdoor thermostats, (not shown on the schematic).

If the outdoor temperature falls below the setpoint on the outdoor thermostat, the additional stages of heat will come on. When it rises above the set point, the system will revert back to 2nd stage supplementary heating.

As the indoor temperature approaches indoor thermostat set point, TSH-2 contacts will open, shutting off supplementary heat and TSH-1 contacts will remain closed until indoor temperature is satisfied, shutting off the complete system.

Emergency Heat

An emergency heat switch (EMERG) is provided within the thermostat. When placed in the emergency heat position, TSH-1 circuit opens to "Y" terminal and closes to "X2" terminal. Supplementary heat now operates on 1st call for heating. "G" terminal sequence remains unchanged at this point. The outdoor thermostats (if used) are by-passed.

"T" (Thermistor) Circuit

The "T" circuit, used with both the manual and automatic changeover thermostats in conjunction with heat pump applications, is used for anticipation of outdoor condition changes. This thermistor varies the resistance as temperature varies in an inverse proportional relationship. It is located in the outdoor unit on the defrost control timer (DFC) and is in series with a fixed value resistor on the thermostat between "R" and "T" terminals. Should this "T" circuit from the outdoor unit become inoperative, the thermostat could be out of calibration by as much as 6 to 10 degrees. Before attempting to calibrate the thermostat, be sure to check this circuit for proper operation.

Indoor Fan

The evaporator fan is controlled by an ON/AUTO switch on the room thermostat. With the switch positioned at AUTO and the unit operating in the cooling mode, fan operation coincides with the thermostat calling for cooling. If the unit is operating in the heating mode while the fan switch is at AUTO, fan operation coincides with the thermostat calling for heating. When the fan switch is positioned at ON, fan operation is continuous.

Low Outdoor Ambient Cooling

The Evaporator Defrost Control is standard equipment on Air Handlers and will permit low ambient cooling down to 35°F. For cooling operation down to 0°F, use an accessory head pressure control on the outdoor unit.

Maintenance

Perform all of the indicated maintenance procedures at the intervals scheduled. This will prolong the life of the unit and reduce the possibility of costly equipment failure.

Monthly

Conduct the following maintenance inspections once per month.

⚠WARNING
Hazardous Voltage!

Disconnect all electric power, including remote disconnects before servicing. Follow proper lockout/tagout procedures to ensure the power can not be inadvertently energized. Failure to disconnect power before servicing could result in death or serious injury.

⚠WARNING
Rotating Components!

Disconnect all electric power, including remote disconnects before servicing. Follow proper lockout/tagout procedures to ensure the power can not be inadvertently energized. Failure to disconnect power before servicing could result in death or serious injury.

1. Inspect air filters and clean if necessary.
2. Check unit wiring to ensure all connections are tight and that the wiring insulation is intact.
3. Check drain pans and condensate piping to insure they are free of obstacles.
4. Manually rotate the indoor fan to insure proper operation.
5. Inspect the evaporator and condenser coils for dirt and debris. If the coils appear dirty, clean them.

⚠WARNING
Live Electrical Components!

During installation, testing, servicing and troubleshooting of this product, it may be necessary to work with live electrical components. Have a qualified licensed electrician or other individual who has been properly trained in handling live electrical components perform these tasks. Failure to follow all electrical safety precautions when exposed to live electrical components could result in death or serious injury.

6. With the unit operating in the cooling mode, check the suction and discharge pressures and compare them with Pressure Curve values in unit Service Facts. Record these readings on the "Maintenance Log," see Table 5, p. 29.
7. Observe indoor fan operation and correct any unusual or excessive vibration. Clean blower wheels as needed.

Annually (Cooling Season)

The following maintenance procedures must be performed at the beginning of each cooling season to insure efficient unit operation.

⚠WARNING
Hazardous Voltage!

Disconnect all electric power, including remote disconnects before servicing. Follow proper lockout/tagout procedures to ensure the power can not be inadvertently energized. Failure to disconnect power before servicing could result in death or serious injury.

⚠WARNING
Rotating Components!

Disconnect all electric power, including remote disconnects before servicing. Follow proper lockout/tagout procedures to ensure the power can not be inadvertently energized. Failure to disconnect power before servicing could result in death or serious injury.

1. Perform all of the monthly maintenance inspections.

⚠WARNING
Live Electrical Components!

During installation, testing, servicing and troubleshooting of this product, it may be necessary to work with live electrical components. Have a qualified licensed electrician or other individual who has been properly trained in handling live electrical components perform these tasks. Failure to follow all electrical safety precautions when exposed to live electrical components could result in death or serious injury.

2. With the unit operating, check unit superheat and record the reading in the "Maintenance Log."

3. Remove any accumulation of dust and/or dirt from the unit casing.

4. Remove corrosion from any surface and repaint. Check the gasket around the control panel door to insure it fits correctly and is in good condition to prevent water leakage.

⚠WARNING
Rotating Components!

Disconnect all electric power, including remote disconnects before servicing. Follow proper lockout/ tagout procedures to ensure the power can not be inadvertently energized. Secure drive sheaves to ensure rotor cannot freewheel. Failure to secure drive sheaves or disconnect power before servicing could result in death or serious injury.

5. Inspect the evaporator fan belt. If it is worn or frayed, replace it.

6. Inspect the control panel wiring to insure that all connections are tight and that the insulation is intact.

Lubricate the indoor fan motor bearing with a non detergent 20-weight oil. (To insure good bearing lubrication, condenser fan motor bearings should be lubricated once every six months.)

Note: *Some motors are permanently lubricated.*

7. Check refrigerant piping and fittings for leaks.

The following warning complies with State of California law, Proposition 65.

⚠WARNING
Fiberglass Wool!

Product contains fiberglass wool. Disturbing the insulation in this product during installation, maintenance or repair will expose you to airborne particles of glass wool fibers and ceramic fibers known to the state of California to cause cancer through inhalation. Glass wool fibers could result in respiratory, skin or eye irritation.

Precautionary Measures

- Avoid breathing fiberglass dust.
- Use a NIOSH approved dust/mist respirator.
- Avoid contact with the skin or eyes. Wear long-sleeved, loose-fitting clothing, gloves, and eye protection.

- Wash clothes separately from other clothing: rinse washer thoroughly.
- Operations such as sawing, blowing, tear-out, and spraying may generate fiber concentrations requiring additional respiratory protection. Use the appropriate NIOSH approved respirator in these situations.

First Aid Measures

- Eye Contact
  - Flush eyes with water to remove dust. If symptoms persist, seek medical attention.
- Skin Contact
  - Wash affected areas gently with soap and warm water after handling.

Table 5. Maintenance Log

Date	Ambient Temp. (°F)	Evaporator Entering Air		Compressor		Superheat Circuit #1 (°F)	Subcooling Circuit #1 (°F)
		Dry Bulb	Wet Bulb	Suction Pressure	Discharge Pressure		

Note: Perform each inspection once per month (during cooling season) while unit is operating

Warranty

For Commercial Unitary Equipment Rated Under 20 Tons and Related Accessories

Products Covered

This warranty is extended by Trane, andapplies to the following products:

- All packaged and split system air conditioners and heat pumps have a rated capacity of less than 20 tons.
- All packaged combinations gas/electric air conditioners having a rated capacity of less than 20 tons.
- All packaged combination gas/electric air conditioners having a rated capacity of 1 ½ through 5 tons single phase electric power and used for commercial applications. (As used in this warranty, a commercial application is any application where the end purchaser uses the product for other than personal, family or household purposes.)
- All accessories for the above products which are sold by American Standard Inc. and applied in accordance with American Standard Inc. specifications.

Basic Warranty

The warrantor warrants for a period of twelve (12) months from the initial start-up or eighteen (18) months from date of shipment, whichever is sooner, that the products covered by this warranty (1) are free from defects in material and manufacture, and (2) have the capacities and ratings set forth in the warrantor's catalogs and bulletins.

Extended Four-Year Warranty On Compressors

The warrantor warrants for a period of four (4) years com-mencing twelve (12) months from date of installations or eighteen (18) months from date of shipment, whichever is sooner, that the compressor in any product covered by this warranty (1) is free from defects in material and manufac-ture, and (2) has the capacities and ratings set forth in the warrantor's catalogs and bulletins.

Extended Four-Year Warranty On Heat Exchangers

The warrantor warrants for a period of four (4) years com-mencing twelve (12) months from date of installations or eighteen (18) months from date of shipment, whichever is sooner, that the gas-fired heat exchanger in any products covered by this warranty (1) is free from defects in material and manufacture, and (2) has the capacities and ratings set forth in the warrantor's catalogs and bulletins.

Exclusions And Limitations

The warrantor's obligations and liabilities under this warranty are limited to furnishing F.O.B. factory or warehouse at the warrantor-designated shipping point, freight allowed toBuyer's city (or port of export for shipments outside the con-terminous United States) a replacement product or, at the option of the warrantor, parts for the repair of the product not conforming to this warranty and which have been returned to the warrantor.

The warrantor's warranty is conditional on the Customer providing written notice to the warrantor within thirty (30) days of the discovery of the defect. No product shall be returned to the warrantor without the warrantor's written permission. No liability whatever shall attach to warrantor until said products have been fully paid for and then said liability shall be limited to the purchase price of the equipment shown to be defective.

The warranty does not apply to any compressor or gas-fired heat exchanger which has been repaired or altered in such manner as, in the judgement of the warrantor, affects its stability or reliability. This warranty does not cover (1) any heat exchanger which has been fired with an

improper type of fuel (2) a heat exchanger which is installed in a beauty parlor, dry cleaning establishment, de-greasing plant or in any corrosive atmosphere; or (3) any heat exchanger which is not shown to be defective by the warrantor's inspection.

This warranty does not cover damage due to accident, abuse, improper use, external causes, freezing, corrosion, erosion or deterioration.

Local transportation, related service labor, air filters, diagnosis calls, refrigerant and related items are not covered.

THE WARRANTY AND LIABILITY SET FORTH HEREIN ARE IN LIEU OF ALL OTHER WARRANTIES AND LIABILITIES, WHETHER IN CONTRACT OR IN NEGLIGENCE, EXPRESS OR IMPLIED, IN LAW OR IN FACT, INCLUDING IMPLIED WARRANTIES OR MERCHANTABILITY AND FITNESS FOR A PARTICULAR PURPOSE AND ANY IMPLIED WARRANTIES OTHERWISE ARISING FROM THE COURSE OF DEALING OR TRADE. IN NO EVENT SHALL THE WARRANTOR BE LIABLE FOR ANY INCIDENTAL OR CONSEQUENTIAL DAMAGES.

The warrantor makes certain further warranty protection available on an optional, extra-cost basis. Any further war-ranty must be in writing. If you wish further help or informa-tion concerning this warranty, contact:

Trane — Warrantor

2701 Wilma Rudolph Blvd.

Clarksville, TN 37040

Commercial Equipment Rated 20 Tons and Larger and Related Accessories (Parts Only)

Products Covered

This warranty is extended by Trane, and applies only to commercial equipment rated 20 tons and larger and related accessories purchased and retained for use within the U.S.A. and Canada.

Warrantor warrants for a period of 12 months from initial start-up or 18 months from date of shipment, whichever is less, that the products covered by this warranty (1) are free from defects in material and manufacture, and (2) have the capacities and ratings set forth in catalogs and bulletins; provided, that no warranty is made against corrosion, erosion or deterioration.

Warrantor's obligations and liabilities under this warranty are limited to furnishing, F.O.B. factory replacement parts (or equipment at the option of Warrantor) for all Warrantor's products not conforming to this warranty. Warrantor shall not be obligated to pay for the cost of lost refrigerant. No liability whatever shall attach to Warrantor until said products have been paid for and then said liability shall be limited to the purchase price of the equipment shown to be defective.

The Warranty and Liability set forth herein are in lieu of all other warranties and liabilities, whether in contract or in negligence, express or implied, in law or in fact, including implied warranties of merchantability and fitness for particular use, and in no event shall warrantor be liable for any incidental or consequential damages

Some states do not allow limitations on how long an implied warranty lasts or do not allow the exclusion or limitation of incidental or consequential damages, so the above limitation or exclusion may not apply to you. This warranty gives you specific legal rights, and you may also have other rights which vary from state to state.

Trane — Warrantor

2701 Wilma Rudolph Blvd.

Clarksville, TN 37040

GW-598-4799

Wiring Diagram Matrix

Note: *Wiring diagrams are available via e-Library or through the local sales office.*

WIRING DIAGRAM NO.	DIAGRAM TYPE	UNIT MODEL NO'S
4367-0325	ElectroMechanical Connection and Schematic	TTA120B3, TTA120B4, TTA120BW, TTA100BD, TTA150B3, TTA150B4, TTA150BW, TTA125BD, TTA120BK, TTA150BK
4367-0326	ElectroMechanical Connection and Schematic	TTA100CD, TTA120C3, TTA120C4, TTA120CW
4367-0327	ElectroMechanical Connection and Schematic	TWA090A3, TWA090A4, TWA090AW, TWA120A4, TWA120AW, TWA075AD, TWA100AD
4367-0335	ElectroMechanical Connection and Schematic	TTA155BD, TTA180B3, TTA180B4, TTA180BW, TTA180BK, TTA200BD, TTA240B4, TTA240BW, TTA240BK
4367-0336	ElectroMechanical Connection and Schematic	TTA240B3
4367-0337	ElectroMechanical Connection and Schematic	TTA155CD, TTA180C3, TTA180C4, TTA180CW
4367-0338	ElectroMechanical Connection and Schematic	TWA200BD, TWA240B4, TWA240BW
4367-0339	ElectroMechanical Connection and Schematic	TWA155BD, TWA180B3, TWA180B4, TWA180BW
4367-0340	ElectroMechanical Connection and Schematic	TWA240B3
4367-0341	ElectroMechanical Connection and Schematic	TTA120A3
4367-0342	ElectroMechanical Connection and Schematic	TTA075AD, TTA085AD,TTA090A3, TTA090A4, TTA090AW, TTA090AK, TTA100AD, TTA120A4, TTA120AW, TTA120AK
4367-0343	ElectroMechanical Connection and Schematic	TWA090A3, TWA090A4, TWA090AW, TWA120A4, TWA120AW, TWA075AD, TWA100AD
4367-0344	ElectroMechanical Connection and Schematic	TWA120A3
4367-0345	ReliaTel Connection and Schematic	TTA240B3
4367-0346	ElectroMechanical Connection and Schematic	TWE060A3, TWE060C3
4367-0347	ElectroMechanical Connection and Schematic	TWE090A1, TWE120A1
4367-0349	ElectroMechanical Connection and Schematic	TWE155BD, TWE180BW, TWE180B3, TWE180B4, TWE180BK, TWE200BD, TWE240BW, TWE240B3, TWE240B4, TWE240BK, TWE155CD, TWE180CW, TWE180C3, TWE180C4, TWE180CK, TWE200CD, TWE240CW, TWE240C3, TWE240C4, TWE240CK
4367-0350	ElectroMechanical Connection and Schematic	TWE090B3, TWE120B3, TWE120BK
4367-0351	ElectroMechanical Connection and Schematic	TWE100BD, TWE120BW
4367-0352	ElectroMechanical Connection and Schematic	TWE060B1, TWE090B1, TWE120B1
4367-0353	ElectroMechanical Connection and Schematic	TWE060B3
4367-0354	ElectroMechanical Connection and Schematic	TWE060B4
4367-0355	ElectroMechanical Connection and Schematic	TWE090AK, TWE090A3, TWE090C3, TWE120AK, TWE120A3, TWE120C3
4367-0356	ElectroMechanical Connection and Schematic	TWE060A1, TWE060C1
4367-0357	ElectroMechanical Connection and Schematic	TWE050AD, TWE060AK, TWE060AW, TWE060A4, TWE060CW, TWE060C4
4367-0358	ElectroMechanical Connection and Schematic	TWE075AD, TWE090AW, TWE100AD, TWE120AW, TWE090CW, TWE120CW
4367-0359	ReliaTel Connection and Schematic	TTA155BD, TTA180B3, TTA180B4, TTA180BW, TTA180BK, TTA200BD, TTA240B4, TTA240BW, TTA240BK
4367-0360	ReliaTel Connection and Schematic	TTA155CD, TTA180C3, TTA180C4, TTA180CW
4367-0361	ReliaTel Connection and Schematic	TTA100CD, TTA120C3, TTA120C4, TTA120CW
4367-0362	ReliaTel Connection and Schematic	TTA120B3, TTA120B4, TTA120BW, TTA100BD, TTA150B3, TTA150B4, TTA150BW, TTA125BD, TTA120BK, TTA150BK
4367-0363	ReliaTel Connection and Schematic	TTA075AD, TTA085AD, TTA090A3, TTA090A4, TTA090AW, TTA090AK, TTA100AD, TTA120A4, TTA120AW, TTA120AK
4367-0364	ReliaTel Connection and Schematic	TTA120A3
4367-0444	ReliaTel Connection and Schematic	TTA200FD, TTA240F4, TTA240FW, and TTA240FK

Literature Order Number	TWA-SVX01A-EN
Date	December 2006
Supersedes	PKG-PR0012-EN July 2006

www.trane.com

For more information, contact your local Trane office or e-mail us at comfort@trane.com

Trane has a policy of continuous product and product data improvement and reserves the right to change design and specifications without notice.

HEAD PRESSURE CONTROL

MANUFACTURER: **TRANE**

MODEL #: **BAYLOAM429C**

Installer's Guide

Head Pressure Control

Models	Used with: 60 HZ Units	Used with: 50 HZ Units
BAYLOAM429C	CTA/TTA/TWA090A	TTA/TWA075AD
	CTA/TTA/TWA120A	TTA085AD
	CTA/TTA120B	TTA/TWA100AD
	TTA120C	TTA100BD
	TTA150B	TTA100CD
	CTA/TTA/TWA180B	TTA125BD
	TTA180C	TTA/TWA155BD
	TTA/TWA240B	TTA155CD
	TTA240F	TTA/TWA200BD
		TTA200FD

January 2008

ACC-SVN37D-EN

Preface and Warnings and Cautions

Warnings and Cautions appear at appropriate sections throughout this manual. Read these carefully.

⚠ WARNING –

Indicates a potentially hazardous situation which, if not avoided, could result in death or serious injury.

⚠ CAUTION

Indicates a potentially hazardous situation which, if not avoided, may result in minor or moderate injury. It may also be used to alert against unsafe practices.

CAUTION

Indicates a situation that may result in equipment or property-damage-only accidents.

General

The head pressure control (HPC) referred to in this Installer's Guide is used with various condensers that differ according to voltage.

CAUTION
Application Use!

This head pressure control cannot be used on units with the ReliaTel™ control option. Units containing the ReliaTel option may be defined through the 10th digit of the model number as "R", "T", "U", or "W" selections.

Inspection

Remove the plastic bag of small parts, outdoor fan motor heat sink and head pressure control assembly from the shipping package and inspect for possible damage. If the accessory has been damaged, it should be reported to and claims made against the transportation company immediately.

Any missing parts should be immediately reported to your supplier and replaced with authorized parts only.

Note: *All phases of the installation must comply with National, State, and Local codes.*

Parts List

- (1) Head pressure control assembly
- (1) Outdoor fan motor heat sink with clamp
- (1) Liquid sensor clamp
- (1) Thermal grease
- (1) Insulation tape
- (1) Installed accessory label
- (4) Snap bushings
- (15) Wire ties
- (4) 10 x 16 screws
- (2) Hook-up diagrams
- (3) Black wire ties
- (1) Information label

© 2008 Trane All rights reserved

Contents

General 2
Inspection 2
Parts List 2
Installation for CTA090A, CTA120A, CTA120B 4
Installation for
TTA/TWA075A,TTA085A,
TTA/TWA090A,TTA/TWA100A, TTA100B,TTA100C,
TTA/TWA120A,TTA120B,
TTA120C, TTA125B,TTA150B 6
Installation for CTA180B 8
Installation for
TTA/TWA180B,TTA/TWA155B,
TTA155C,TTA180C,
TTA/TWA200B,TTA/TWA240B/TTA200F, TTA240F 10
System Setup 13

Installation

Installation for CTA090A, CTA120A, CTA120B

⚠ WARNING
Hazardous Voltage w/ Capacitors!

Disconnect all electric power, including remote disconnects and discharge all motor start/run capacitors before servicing. Follow proper lockout/tagout procedures to ensure the power cannot be inadvertently energized. Verify with an appropriate voltmeter that all capacitors have discharged. Failure to disconnect power and discharge capacitors before servicing could result in death or serious injury.

1. Prepare Unit for Installation
   a. Disconnect all power from the unit.
   b. Remove panel(s) covering the unit control box and compressor access.
   c. Ensure that all capacitors have discharged stored voltage.
   d. Remove knockout in bottom flange of control box and insert bushing provided, Figure 2.
   e. Remove knockout located at side of unit below HPC mounting location and insert bushing provided, Figure 2.
2. Install mounting bracket and control unit
   a. Remove mounting bracket from the control unit enclosure. Using the punched and tapped holes provided, secure the control unit to the condenser unit using 10 x 16 screws (supplied).

Note: *Two of the holes will already be in use. Remove existing screws first.*

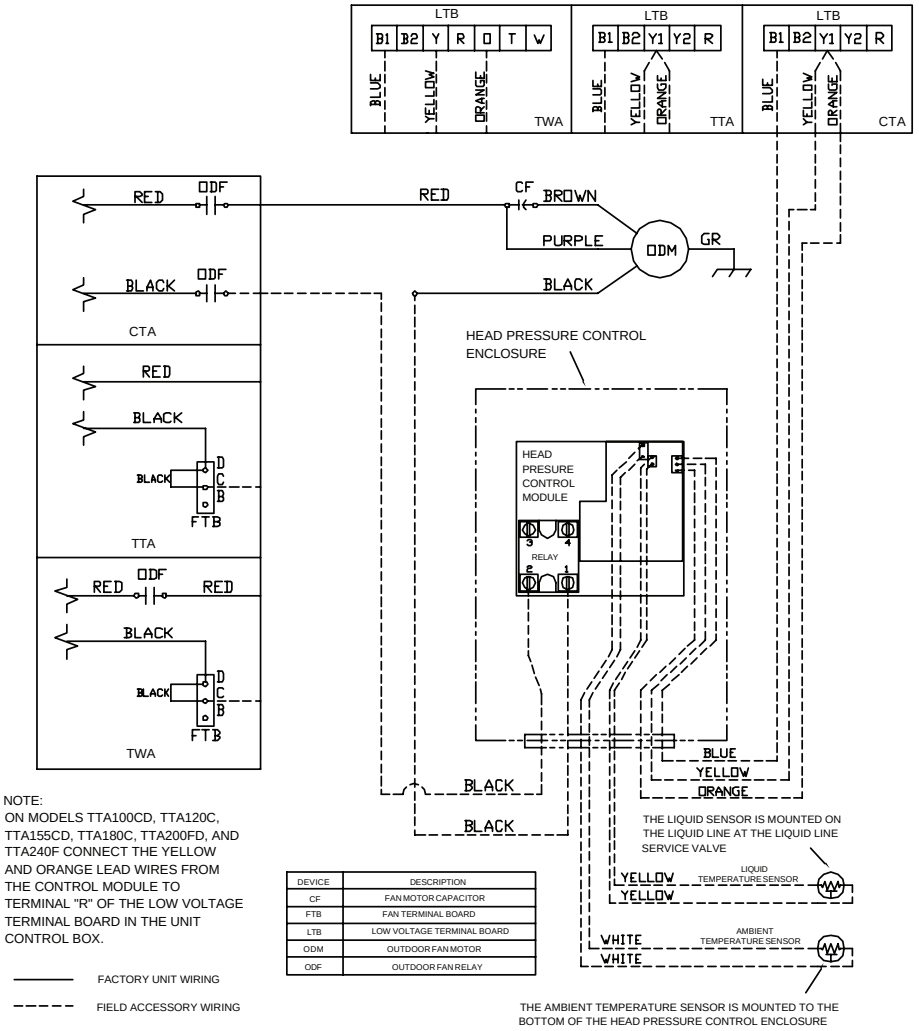

Figure 1. Interconnecting wire diagram for TTA/TWA075A, TTA085A,CTA/TTA/TWA090A,TTA/TWA100A,TTA100B,TTA100CD CTA/TTA/TWA120A,CTA/TTA120B,TTA120C,TTA125B,TTA150B

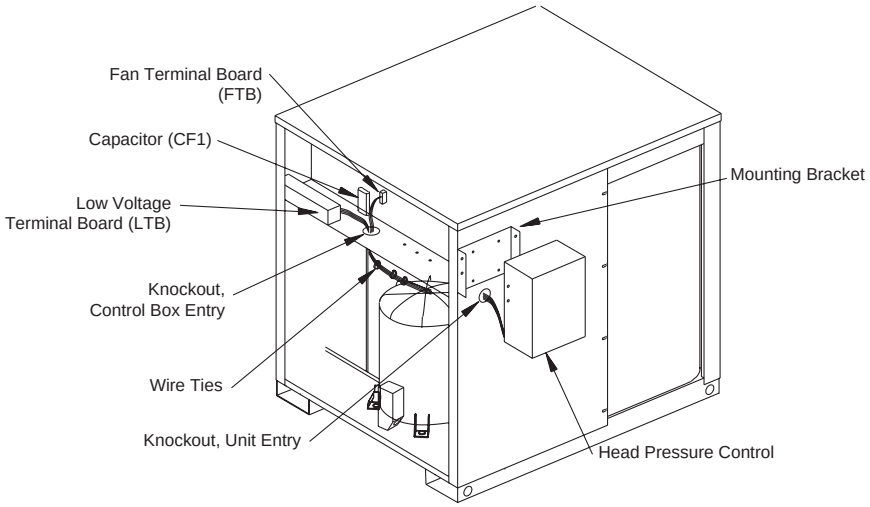

Figure 2. Head pressure control installation for CTA090A, CTA120A, CTA120B

b. Mount the head pressure control (HPC) onto the mounting bracket and secure with the original screws. Route the HPC wires through the bushing in the knockout hole, *Figure 2*.

Note: *Route all wires away from hot tubes or sharp edges.*

3. Install fan motor heat sink.
   a. Remove the fan guard.

CAUTION
Equipment Damage!

Do not bend fan blades when removing fan motor assembly. Bent blades may cause excessive load on the motor bearings.

   b. Remove the fan motor assembly as one piece by loosening the belly band mounting bolt, cutting the motor lead wire ties, and disconnecting the motor leads if needed. Be careful not to bend the fan blades.
   c. Install the fan motor heat sink onto the shaft end of the motor.
   d. Install the heat sink clamp and tighten until the heat sink is snug on the motor.
   e. Ensure there are not interferences between the heat sink and the slinger. Make sure the fan hub bolt is tight. Torque to 165-175 in. lbs.
   f. Re-install the fan motor assembly. Use the black wire ties provided to secure the fan motor lead wires.
   g. Re-install the fan guard.
4. Wiring fan motors
   a. Disconnect the black fan motor lead from terminal "6" of the fan motor relay.
   b. Re-connect the fan motor lead to the black wire from the "1/L1" terminal of the solid state relay on the control module. This wire has an insulated 1/4" male tab connector for attaching to the fan motor wire terminal.
   c. Connect the black wire from terminal "2/T1" of the solid state relay on the control module to fan motor relay terminal "6".
5. Wiring the low voltage wires
   a. Connect the yellow lead wire from the control module to terminal "Y1" of the low voltage terminal board.
   b. Connect the blue lead wire from the control module to terminal "B1" of the low voltage terminal board.
   c. Connect the orange lead wire from the control module to the piggyback tab of the yellow wire attached to terminal "Y1" of the low voltage terminal board.
6. Routing liquid sensor wires
   a. Route the liquid sensor which has wires from the HPC through the bushing in the knockout located on the side of the unit.

Note: *Route all wires away from the hot tubes or sharp edges.*

   b. Route the liquid sensor to the liquid line service valve.
7. Mounting the liquid sensor
   a. Find a horizontal section of the liquid line close to the liquid line service valve.
   b. Apply the thermal grease (supplied) to the liquid line where the sensor will be mounted next to the liquid line service valve.
   c. Using the provided clamp, attach the sensor assembly as shown in *Figure 3*. Ensure that at least two teeth are engaged on the clamp.
   d. With the sensor clamped in place, wrap the complete assembly with insulation tape (provided).
8. Conclude installation
   a. Using wire ties with bulletnosed clips (provided), bundle and dress excess wires.
   b. Secure wire ties to the underside of the control box panel into 1/4" holes.
   c. Apply the correct adhesive backed wiring diagram for the accessory kit to the inside of the compressor access panel.
   d. Apply the 4" x 1" outdoor fan motor cycling information label from the plastic bag to the control box access panel just above the Hazardous Voltage warning label.
   e. Reinstall panels and secure with the original screws.
   f. Re-connect all power to the unit.

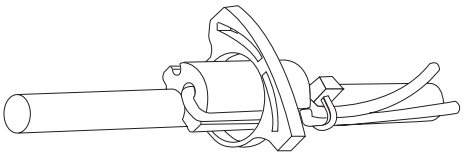

Figure 3. Liquid sensor mounting

Installation for TTA/TWA075A,TTA085A, TTA/TWA090A,TTA/ TWA100A, TTA100B,TTA100C, TTA/TWA120A,TTA120B, TTA120C, TTA125B,TTA150B

⚠ WARNING
Hazardous Voltage w/ Capacitors!

Disconnect all electric power, including remote disconnects and discharge all motor start/run capacitors before servicing. Follow proper lockout/tagout procedures to ensure the power cannot be inadvertently energized. Verify with an appropriate voltmeter that all capacitors have discharged. Failure to disconnect power and discharge capacitors before servicing could result in death or serious injury.

1. Prepare Unit for Installation
   a. Disconnect all power from the unit.
   b. Remove panel(s) covering the unit control box and compressor access.

c. Ensure that all capacitors have discharged stored voltage.

d. Remove knockout in bottom flange of control box and insert bushing provided, *Figure 4*.

e. Remove knockout located at side of unit below HPC mounting location and insert bushing provided, *Figure 4*.

2. Install mounting bracket and control unit

a. Remove mounting bracket from the control unit enclosure. Using the punched and tapped holes provided, secure the control unit to the condenser unit using 10 x 16 screws (supplied).

Note: *Two of the holes will already be in use. Remove existing screws first.*

b. Mount the head pressure control (HPC) onto the mounting bracket and secure with the original screws. Route the HPC wires through the bushing in the knockout hole, *Figure 4*.

Note: *Route all wires away from hot tubes or sharp edges.*

3. Install fan motor heat sink.

a. Remove the fan guard.

CAUTION
Equipment Damage!

Do not bend fan blades when removing fan motor assembly. Bent blades may cause excessive load on the motor bearings.

b. Remove the fan motor assembly as one piece by loosening the belly band mounting bolt, cutting the motor lead wire ties, and disconnecting the motor leads if needed. Be careful not to bend the fan blades.

c. Install the fan motor heat sink onto the shaft end of the motor.

d. Install the heat sink clamp and tighten until the heat sink is snug on the motor.

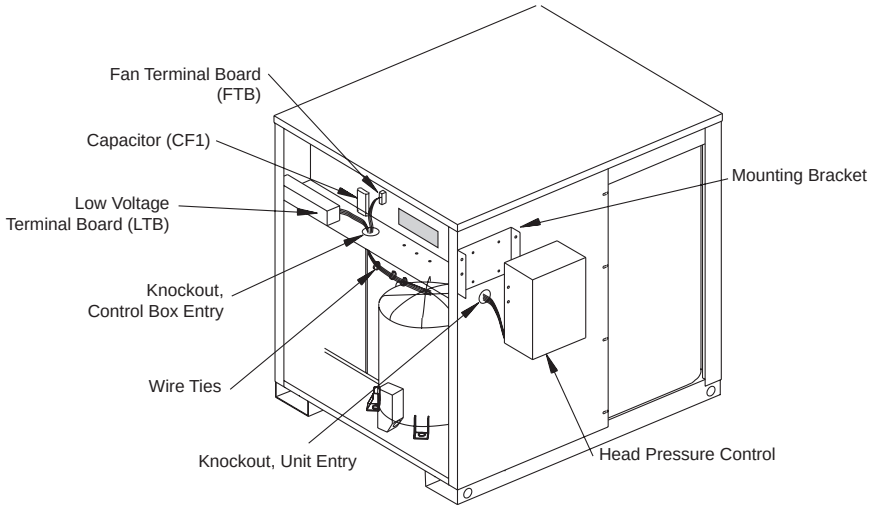

Figure 4. Head pressure control installation forTTA/TWA075A, TTA085A,CTA/TTA/TWA090A,TTA/TWA100A,TTA100B,TTA100C CTA/TTA/TWA120A,CTA/TTA120B,TTA120C,TTA125B,TTA150B

e. Ensure there are not interferences between the heat sink and the slinger. Make sure the fan hub bolt is tight. Torque to 165-175 in. lbs.

f. Re-install the fan motor assembly. Use the black wire ties provided to secure the fan motor lead wires.

g. Re-install the fan guard.

4. Wiring fan motors

a. Locate the fan terminal board (FTBA), in the center of the control box, and disconnect the black fan motor lead from terminal "C" of the fan terminal board (FTBA). *See unit connection diagram on inside control box cover.*

b. Re-connect the fan motor lead to the black wire from the "1/L1" terminal of the solid state relay on the control module. This wire has an insulated 1/4" male tab connector for attaching to the fan motor wire.

c. Connect the black wire from terminal "2/T1" of the solid state relay on the control module to fan motor relay terminal "C".

5. Wiring the low voltage wires

a. Connect the yellow lead wire from the control module to terminal "Y" or "Y1" of the low voltage terminal board (LTB). Connect to terminal "R" on the LTB for the TTA100CD and TTA120C models.

b. Connect the blue lead wire from the control module to terminal "B1" of the low votage terminal board (LTB).

c. Connect the orange lead wire from the control module to the piggyback tab of the yellow wire attached to terminal "Y1". Connect to terminal "R" on the LTB for the TTA100CD and TTA120C models. Connect the orange wire to terminals "Y1" or "R" on TTA models only.

d. Connect the orange lead wire from the control module to terminal "O" of the low voltage terminal board (LTB) on TWA models.

6. Routing liquid sensor wires

a. Route yellow liquid sensor wires from the HPC through the bushing in the knockout located on the side of the unit.

b. Route liquid sensor to the liquid line service valve.

Note: *Route all wires away from hot tubes or sharp edges.*

7. Mounting the liquid sensor
   a. Find a horizontal section of the liquid line close to the liquid line service valve.
   b. Apply the thermal grease (supplied) to the liquid line where the sensor will be mounted next to the liquid line service valve.
   c. Using the provided clamp, attach the sensor assembly as shown in *Figure 3*. Ensure that at least two teeth are engaged on the clamp.
   d. With the sensor clamped in place, wrap the complete assembly with insulation tape (provided).
8. Conclude installation
   a. Using wire ties with bulletnosed clips (provided), bundle and dress excess wires.
   b. Secure wire ties to the underside of the control box panel into 1/4" holes.
   c. Apply the correct adhesive backed wiring diagram from the accessory kit to the inside of the compressor access panel.
   d. Apply the 4" x 1" outdoor fan motor cycling information label from the plastic bag to the control box acess panel just above the Hazadous Voltage warning label.
   e. Reinstall panels and secure with the original screws.
   f. Re-connect all power to the unit

Installation for CTA180B

Be cautious not to "cross circuits" during installation. The HPC for "circuit A" must sense liquid temperature from compressor A. The HPC for "circuit B" must sense liquid temperature from compressor B. See *Figure 5* for circuit designation.

⚠ WARNING
Hazardous Voltage w/Capacitors!

Disconnect all electric power, including remote disconnects and discharge all motor start/run capacitors before servicing. Follow proper lockout/tagout procedures to ensure the power cannot be inadvertently energized. Verify with an appropriate voltmeter that all capacitors have discharged. Failure to disconnect power and discharge capacitors before servicing could result in death or serious injury.

1. Prepare Unit for Installation
   a. Disconnect all power from the unit.
   b. Remove control box covers located across the top center of the unit.
   c. Ensure that all capacitors have discharged stored voltage.
   d. Remove compressor access panels.
   e. Remove knockout located in the bottom flange of the control box and insert bushing provided in the kit, *Figure 5*.

CAUTION
Equipment Damage!

The center panel should be removed prior to step f. Failure to remove this panel may result in equipment damage.

   f. Remove the two knockouts from the center panel at the back of the unit. Insert bushings provided with the kit, *Figure 5*.

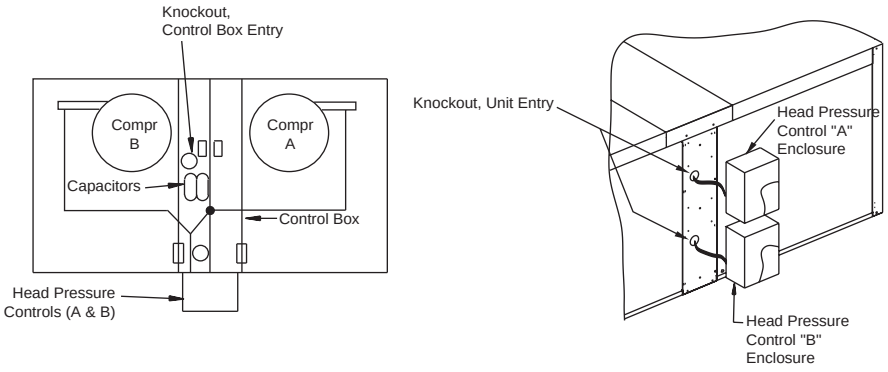

Figure 5. HPC installation for CTA/TTA/TWA180B, TTA/TWA155B,TTA155C,TTA180C,TTA/TWA200B,TTA/TWA240B

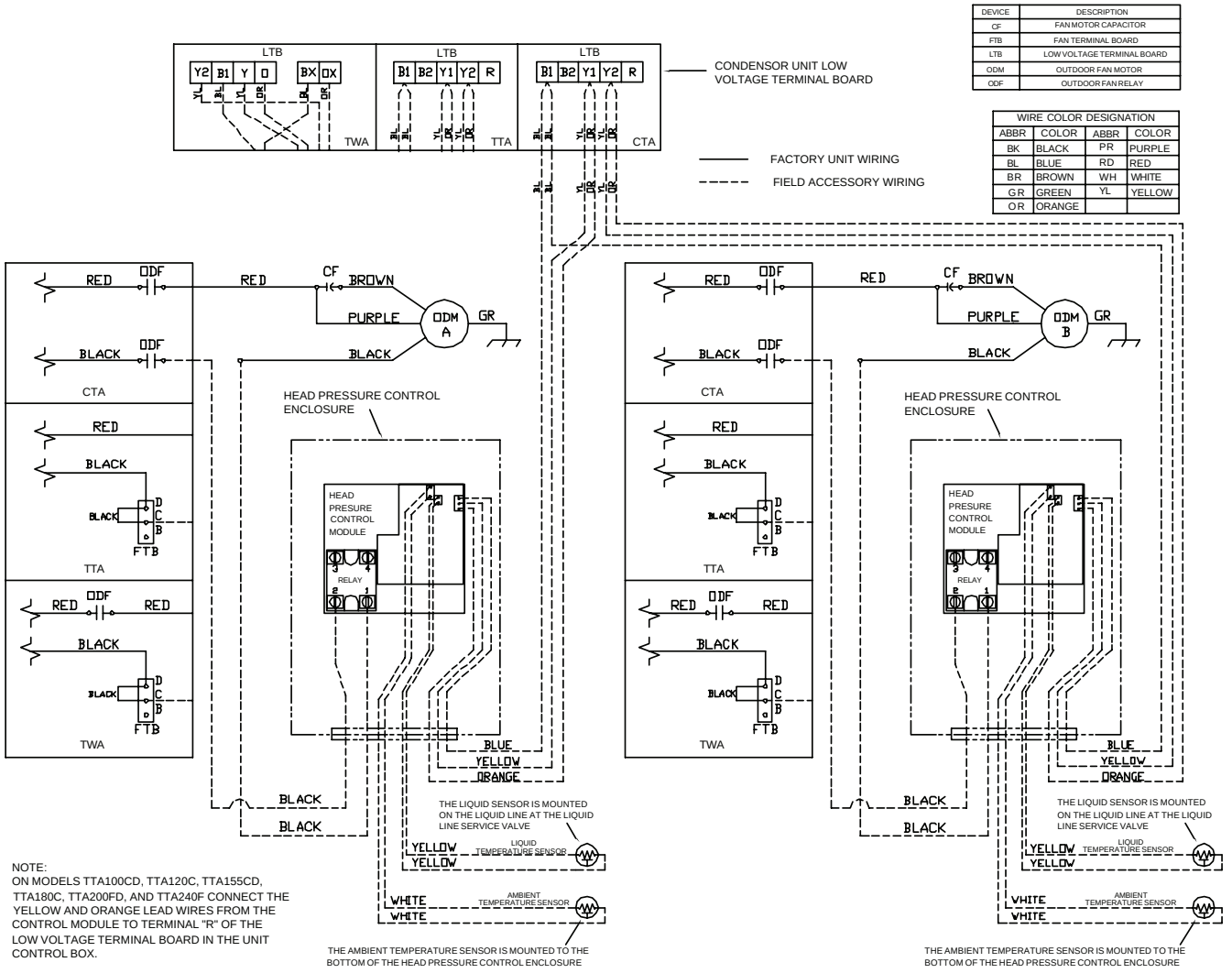

Figure 6. Interconnecting wire diagram for CTA/TTA/TWA180B, TTA/TWA155B,TTA155C,TTA180C,TTA/TWA200B,TTA/TWA240B

2. Install mounting bracket and control unit
   a. Remove mounting bracket from the control unit enclosure. Using the punched and tapped holes provided, secure the control unit to the condenser unit using 10 x 16 screws (supplied).

Note: *Two of the holes will already be in use. Remove existing screws first.*

   b. Mount the head pressure control for circuit "A" onto the upper bracket. Mount the HPC for circuit "B" onto the lower bracket. Secure with original screws. Route the HPC wires through the bushings in the knockout holes located below the mounting brackets.

Note: *Route all wires away from hot tubes or sharp edges.*

3. Install fan motor heat sink.
   a. Remove the fan guard.

CAUTION
Equipment Damage!

Do not bend fan blades when removing fan motor assembly. Bent blades may cause excessive load on the motor bearings.

   b. Remove the fan motor assembly as one piece by loosening the belly band mounting bolt, cutting the motor lead wire ties, and disconnecting the motor leads if needed. Be careful not to bend the fan blades.
   c. Install the fan motor heat sink onto the shaft end of the motor.
   d. Install the heat sink clamp and tighten until the heat sink is snug on the motor.
   e. Ensure there are not interferences between the heat sink and the slinger. Make sure the fan hub bolt is tight. Torque to 165-175 in. lbs.
   f. Re-install the fan motor assembly. Use the black wire ties provided to secure the fan motor lead wires.
   g. Re-install the fan guard.

4. Wiring Fan Motors
   For each motor:
   a. Disconnect the black fan motor lead from terminal "6" of the fan motor relay.
   b. Re-connect the fan motor lead to the black wire from the "1/L1" terminal of the solid state relay on the control module. This wire has an insulated 1/4" male tab connector for attaching to the fan motor wire terminal.
   c. Connect the black wire from terminal "2/T1" of the solid state relay on the control module to fan motor relay terminal "6".

5. Wiring the low voltage wires
   a. Connect the yellow lead wire from the control module to terminal "Y1" of the low voltage terminal board ("Y2" for ODM B).
   b. Connect the blue lead wire from the control module to terminal "B1" of the low voltage terminal board.
   c. Connect the orange lead wire from the control module to the piggyback tab of the yellow wire attached to terminal "Y1" of the low voltage terminal board ("Y2" for ODM B).

6. Routing liquid sensor wires
   a. Route yellow liquid sensor wires from the HPC through the bushing in the knockout located on the side of the unit.

Note: *Route all wires away from hot tubes or sharp edges.*

   b. Route the liquid sensor to the liquid line service valve.

7. Mounting the liquid sensor
   a. Find a horizontal section of the liquid line close to the liquid line service valve.
   b. Apply the thermal grease (supplied) to the liquid line where the sensor will be mounted next to the liquid line service valve.
   c. Using the provided clamp, attach the sensor assembly as shown in *Figure 3*. Ensure that at least two teeth are engaged on the clamp.
   d. With the sensor clamped in place, wrap the complete assembly with insulation tape (provided).

8. Conclude installation
   a. Using wire ties with bullet-nosed clips (provided), bundle and dress excess wires.
   b. Secure wire ties to the underside of the control box panel into 1/4" holes.
   c. Apply the correct adhesive backed wiring diagram from the accessory kit to the inside of the compressor access panel for future reference.
   d. Reinstall panels and secure with the original screws
   e. Re-connect all power to the unit.

Installation for TTA/TWA180B,TTA/TWA155B, TTA155C,TTA180C, TTA/TWA200B,TTA/TWA240B/TTA200F, TTA240F

Be cautious not to "cross circuits" during installation. The HPC for "circuit A" must sense liquid temperature from compressor A. The HPC for "circuit B" must sense liquid temperature from compressor B. See *Figure 5* for circuit designation.

⚠ WARNING
Hazardous Voltage w/Capacitors!

Disconnect all electric power, including remote disconnects and discharge all motor start/run capacitors before servicing. Follow proper lockout/tagout procedures to ensure the power cannot be inadvertently energized. Verify with an appropriate voltmeter that all capacitors have discharged. Failure to disconnect power and discharge capacitors before servicing could result in death or serious injury.

1. Prepare Unit for Installation
   a. Disconnect all power from the unit.
   b. Remove control box covers located across the top center of the unit.
   c. Ensure that all capacitors have discharged stored voltage.
   d. Remove compressor access panels.
   e. Remove knockout located in the bottom flange of the control box and insert bushing provided in the kit, *Figure 5*.

CAUTION
Equipment Damage!

The center panel should be removed prior to step f. Failure to remove this panel may result in equipment damage.

   f. Remove the two knockouts from the center panel at the back of the unit. Insert bushings provided with the kit, *Figure 5*.

2. Install mounting bracket and control unit
   a. Remove mounting bracket from the control unit enclosure. Using the punched and tapped holes provided, secure the control unit to the condenser unit using 10 x 16 screws (supplied).

Note: *Two of the holes will already be in use. Remove existing screws first.*

   b. Mount the head pressure control for circuit "A" onto the upper bracket. Mount the HPC for circuit "B" onto the lower bracket. Secure with original screws. Route the HPC wires through the bushings in the knockout holes located below the mounting brackets.

Note: *Route all wires away from hot tubes or sharp edges.*

3. Install fan motor heat sink.
   a. Remove the fan guard.

CAUTION
Equipment Damage!

Do not bend fan blades when removing fan motor assembly. Bent blades may cause excessive load on the motor bearings.

   b. Remove the fan motor assembly as one piece by loosening the belly band mounting bolt, cutting the motor lead wire ties, and disconnecting the motor leads if needed. Be careful not to bend the fan blades.
   c. Install the fan motor heat sink onto the shaft end of the motor.
   d. Install the heat sink clamp and tighten until the heat sink is snug on the motor.
   e. Ensure there are not interferences between the heat sink and the slinger. make sure the fan hub bolt is tight. Torque to 165-175 in. lbs.
   f. Re-install the fan motor assembly. Use the black wire ties provided to secure the fan motor lead wires.
   g. Re-install the fan guard.

4. Wiring Fan Motors
   For each motor:
   a. Locate fan terminal boards (FTBA and FTBB) in the center of the control box and disconnect the black fan motor lead from terminal "C" of the fan terminal board (FTBA, FTBB). *See unit connection diagram on inside control box cover.*
   b. Re-connect the fan motor lead to the black wire from the "1/L1" terminal of the solid state relay on the control module. This wire has an insulated 1/4" male tab connector for attaching to the fan motor wire terminal.
   c. Connect the black wire from terminal "2/T1" of the solid state relay on the control module to fan motor relay terminal board, terminal point "C".

5. Wiring the low voltage wires
   a. Connect the yellow lead wire from the control module to terminal "Y" or "Y1" of the low voltage terminal board (LTB).
   b. Connect the blue lead wire from the control module to terminal "B1" of the low voltage terminal board (LTB).
   c. Connect the orange lead wire from the control module to the piggyback tab of the yellow wire attached to terminal "Y" or "Y1" on TTA models only.
   d. Connect the orange lead wire from the control module to terminal "O" of the low voltage terminal board (LTB) on TWA models ("OX" for ODM B).

Note: *On models TTA100CD, TTA120C, TTA155CD, TTA180C, TTA200FD, and TTA240F connect the yellow and orange lead wires from the control module to terminal "R" of the low voltage terminal board in the unit control box.*

6. Routing liquid sensor wires
   a. Route yellow liquid sensor wires from the HPC through the bushing in the knockout located on the side of the unit.
   b. Route the liquid sensor to the liquid line service valve.

Note: *Route all wires away from hot tubes or sharp edges.*

7. Mounting the liquid sensor

Note: *The liquid sensor from the control for each condenser fan will be placed on the common liquid line next to the liquid line service valve.*

   a. Find a horizontal section of the liquid line close to the liquid line service valve.
   b. Apply the thermal grease (supplied) to the liquid line where the sensor will be mounted next to the liquid line service valve.
   c. Using the provided clamp, attach the sensor assembly as shown in *Figure 3*. Ensure that at least two teeth are engaged on the clamp.
   d. With the sensor clamped in place, wrap the complete assembly with insulation tape (provided).

8. Conclude installation
   a. Using wire ties with bullet-nosed clips (provided), bundle and dress excess wires.
   b. Secure wire ties to the underside of the control box panel into 1/4" holes.
   c. Apply the correct adhesive backed wiring diagram from the accessory kit to the inside of the condenser access panel.
   d. Apply the 4" x 1" outdoor fan motor cycling information label from the plastic bag to the control box access panel just above the Hazardous Voltage warning label.
   e. Reinstall panels and secure with the original screws
   f. Re-connect all power to the unit.

System Setup

Test Switch

The control board contains a momentary test switch (S1) located in the lower right hand corner of the control board, *Figure 7*. The test switch provides a means of verifying that the fan motor is under the control of the low ambient head pressure controller.

A "Y" signal must be present in order to test the control. Depressing the test switch causes the fan to alternately cycle on (for 3-seconds) and off (for 3-seconds) for a total time of 12-seconds. The on/off fan operation may be observed by watching the fan once the test function has been invoked or by monitoring the head pressure using a gage set.

The light emitting diode (LED) on the solid state relay should light when voltage is being applied to the fan motor. Once the 12-second test period is complete, the control resumes normal control operation.

Dip Switches

The control board contains a 4-position installer selectable dip switch (S2) located in the lower right hand corner of the control board, *Figure 7*. The controller will control to a liquid temperature set point as determined by the dip switch settings, *Table 1*. The dip switch is used:

1. To select either Automatic Mode (recommended setting) or Manual Mode operation (S2 dip switch 4-setting).
2. To select the liquid temperature set point (S2 dip switch 1, 2, and 3-settings).

Automatic Mode: (S2 dip switch 4 in OFF position)

The controller determines the approach temperature = liquid temperature - ambient temperature. The approach temperature is calculated only when the ambient temperature is in the range of 65 to 75°F and the outdoor fan is on continuously.

If the controller has not yet acquired an approach temperature, S2 dip switch 1, 2, & 3 settings are used for determining the liquid temperature set point (the same as in manual mode).

If the controller has acquired an approach temperature, then the liquid temperature set point is determined as follows:

Liquid Temperature Set Point =

Approach Temperature + 70°F

Manual Mode: (S2 dip switch 4 in ON position)

The S2 dip switch 1, 2, and 3 settings are read by the controller and used to determine the liquid temperature set point when:

1. The "Y" signal is first applied.
2. After initial start-up mode completion, i.e., during the system control mode (no sooner than six minutes after the "Y" or signal is applied). The liquid temperature set point will not change during system start-up.

The dip switches should be set prior to initial application of the "Y" or signal to the controller.

The dip switches should be set for each specific HVAC system based upon the following instructions.

Determine Liquid Temperature Set Point

1. Reference appropriate pressure curves from service facts; discharge pressure for cooling units.
2. Locate the high side pressure for 70°F outdoor temperature at the expected indoor wet bulb temperature.
3. Using the refrigerant properties chart, find the saturation temperature for the obtained discharge pressure.
4. Subtract 3 degrees for estimated coil saturated temperature drop to obtain liquid line saturated temperature.
5. Subtract the anticipated subcooling temperature (typically 12-degrees) from the saturation temperature to obtain an estimate of the liquid temperature.
6. Set S2 dip switch 1, 2, and 3 setting to the nearest liquid temperature set point using *Table 1*.

S2 Dip Switch 4:

OFF = Automatic Mode (recommended setting)

ON = Manual Mode

LEDs

The control board contains two LEDs; one green, and one red. The green LED is a status indicator labeled "Lite Port" on the control board. It flashes at a 1/2-second on (plus fast blink at the end for Lite Port data) and 1/2-second off rate in the cooling mode.

The red LED is a small surface mount component located near the end of the large capacitor. The red LED is labeled ALERT on the control board. The red LED indicator is normally off. If the red LED is ON or flashing, then a fault is indicated according to the following:

- **Liquid Sensor Fault** = Red LED flashing 1/10-second ON and 1/10-second OFF.
- **Ambient Sensor Fault** = Red LED flashing 1/2-second ON and 1/2-second OFF.
- **IC EEPROM Fault Board Failure** = Red LED continuously ON (which cannot be field repaired).

If the cause of a fault is cleared or repaired, the red LED fault indication will clear with the removal and reapplication of 24 VAC power "Y" to the control.

The large green LED on the control board will flash at a rate of 0.5 seconds ON and 0.5 seconds OFF in cooling mode. The green LED will remain ON continuously when in heating mode. Once every second

when the green LED is ON, "Lite Port" data is transmitted via the green LED and results in a flicker of the LED.

The solid state relay on the control module also contains a green LED indicator. This LED indicates when the solid state relay is energized by the control. If the control is cycling the fan, then the LED will be ON/OFF accordingly.

System Check-out

Verify the control module is installed and wired per the instructions contained within this installer's guide.

- If uncertain about S2 dip switch 1, 2, 3, and 4 settings, leave in the factory preset position.
- Apply power to the unit. Apply "Y" or control signal.
- Verify the green LED on the control board is flashing at 1/2-second ON, 1/2-second OFF rate.
- Verify no red LED faults are present.

The fan should run continuously for a minimum of 10-seconds after the "Y" signal is applied. After 10-seconds, the control may begin to cycle the fan if the ambient outdoor temperature is 70°F or below.

If the fan is cycling and the outdoor temperature is below 70°F, the control is working.

If after 10-seconds of the "Y" application the fan is ON continuously, the TEST switch (S1) may be used to verify the control module has control over the fan. Momentarily depress the TEST switch (S1) on the control board. The fan should cycle 3-seconds ON, then 3-seconds OFF for 12-seconds.

Note: *If the green LED on the control board is full ON with a blink/flicker OFF every second, the control thinks the unit is in heating mode because the orange wire is not seeing the +24VAC.*

Check to make sure that the orange wire from the control board is connected per the instructions in this document.

Repairs and Replacement

Field repairs to the unit must not be made. For a replacement control, contact the local parts distributor.

Table 1. Dip switch setting

Liquid Temp Set Point °F	Dip Switch 1	Dip Switch 2	Dip Switch 3
70	OFF	OFF	OFF
76	OFF	OFF	ON
82	OFF	ON	OFF
88	OFF	ON	ON
94	ON	OFF	OFF
100	ON	OFF	ON
106	ON	ON	OFF
112	ON	ON	ON

Operating Mode	Dip Switch 4
Automatic	OFF
Manual	ON

1. Shaded area is the recommended setting.

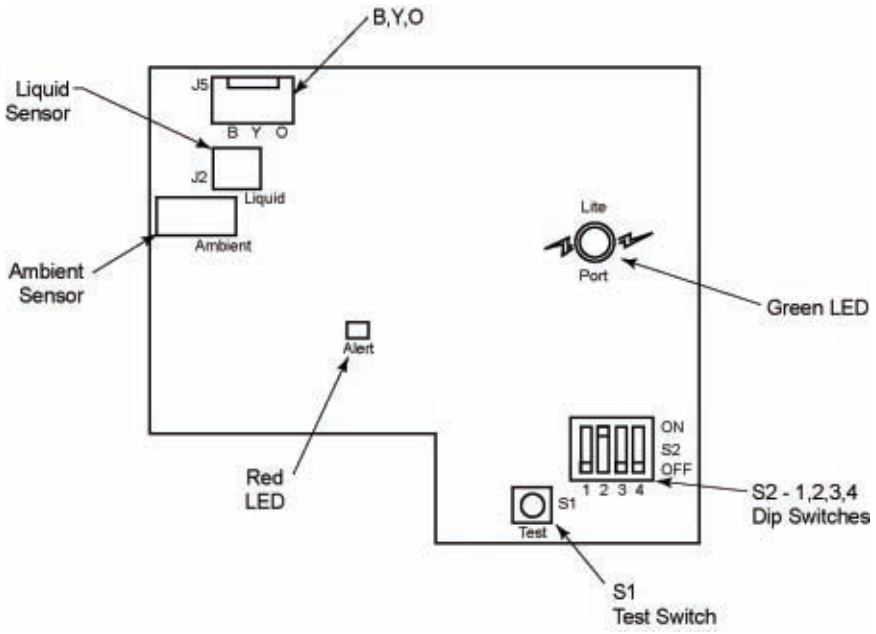

Figure 7. Control board

DEVICE	DESCRIPTION
FTB	FAN TERMINAL BOARD
LVTB	LOW VOLTAGE TERMINAL BOARD
ODM	OUTDOOR FAN MOTOR
ODF	OUTDOOR FAN RELAY

WIRE COLOR DESIGNATION			
ABBR	COLOR	ABBR	COLOR
BK	BLACK	PR	PURPLE
BL	BLUE	RD	RED
BR	BROWN	WH	WHITE
GR	GREEN	YL	YELLOW
OR	ORANGE		

NOTES:

1. ALL CONTROL WIRING MUST BE A MINIMUM OF 18AWG 600V 105°C UL1230.

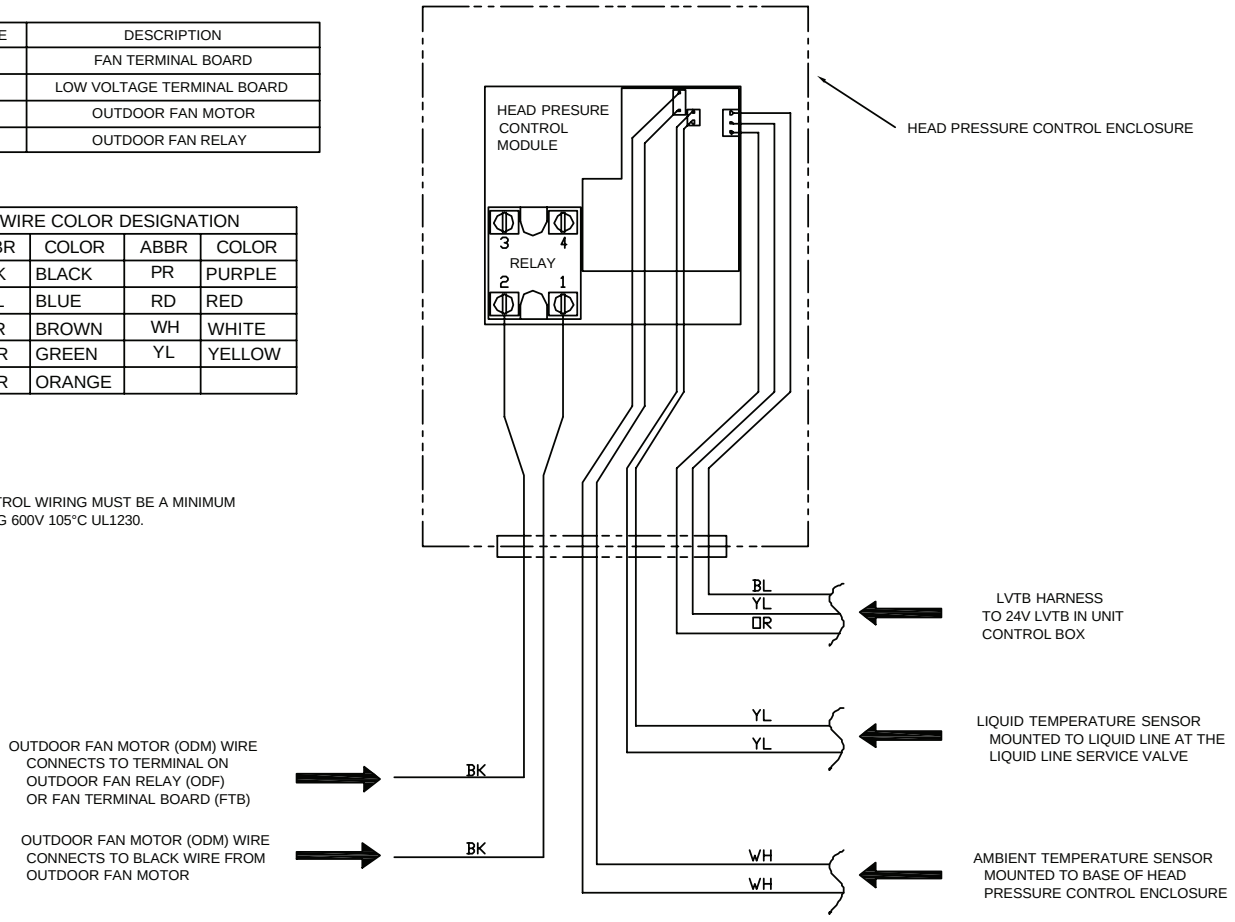

Figure 8. Head pressure control internal wiring diagram

Literature Order Number	ACC-SVN37D-EN
Date	January 2008
Supersedes	ACC-SVN37D-EN (October 2006)

The manufacturer has a policy of continuous product and product data improvement and reserves the right to change design and specifications without notice.